Downloaded from http://www.everyspec.com

INCH-POUND
A-A-59326A
May 1, 2003
SUPERSEDING
A-A-59326
September 25, 1998

COMMERCIAL ITEM DESCRIPTION

COUPLING HALVES, QUICK-DISCONNECT, CAM-LOCKING TYPE

The General Services Administration has authorized the use of this commercial item description, by all federal agencies.

1. SCOPE. This Commercial Item Description (CID) covers 21 types of quick-disconnect, cam-locking, coupling halves and their fittings used in fuel and water handling equipment.

2. CLASSIFICATION. The couplings will conform to the following types, classes, sizes and styles.

2.1 Types. The following are types of quick-disconnect, cam-locking, coupling halves and adapters.

Type I	Coupling Half, Male by Internal Pipe Thread	A-A-59326/1
Type II	Coupling Half, Male by Hose Shank	A-A-59326/2
Type III	Coupling Half, Male by External Pipe Thread	A-A-59326/3
Type IV	Coupling Half, Male by Flange, (TTMA) Truck Trailer Manufacturers Association	A-A-59326/4
Type V	Coupling Half, Female by Internal Pipe Thread	A-A-59326/5
Type VI	Coupling Half, Female by Hose Shank	A-A-59326/6
Type VI	Coupling Half, Female by Hose Shank	A-A-59326/6
Type VII	Coupling Half, Female by External Pipe Thread	A-A-59326/7
Type VIII	Coupling Half, Female by Flange, (TTMA)	A-A-59326/8

Beneficial comments, recommendations, additions, deletions, clarifications, etc. and any data that may improve this document should be sent by letter to: U.S. Army Tank-automotive and Armaments Command, ATTN: AMSTA-TR-D/210, 6501 E. 11 Mile Road, Warren, MI 48397-5000.

AMSC N/A FSC 4730

DISTRIBUTION STATEMENT A. Approved for public release; distribution is unlimited.

Downloaded from http://www.everyspec.com

Type VIII A	Coupling Half, Female by Flange, Hexagon	A-A-59326/9
Type IX	Coupling Half, Cap, Dust	A-A-59326/10
Type X	Coupling Half, Plug, Dust	A-A-59326/11
Type XI	Reducer, Male by Female and Female by Male	A-A-59326/12
Type XII	Reducer, Male by External Pipe Thread	A-A-59326/13
Type XIII	Reducer, External Pipe Thread by Female	A-A-59326/14
Type XV	Adapter, 45°, Female Thread Swivel Collar by Male	A-A-59326/15
Type XVI	Coupling Half, Female by External Straight Threads	A-A-59326/16
Type XVII	Coupling Half, Male by Internal Straight Threads	A-A-59326/17
Type XVIII	Coupling Half, Female Reducer by Internal Pipe Thread	A-A-59326/18
Type XIX	Nipple Adapter, Male by External Grooved Pipe	A-A-59326/19
Type XX	Y Connection, Flanged	A-A-59326/20
Type XXI	Adapter, Male by Male	A-A-59326/21
Type XXII	Adapter, Female by Female, Cam Locking Type	A-A-59326/22

2.2 Classes. Coupling halves and adapters will be of the following classes, based on the material of construction.

Class A - Aluminum Alloy with anodized coating

Class B - Copper Alloy (Brass or Bronze).

Class BA - Aluminum Bronze

Class SS - Stainless Steel

2.4 Sizes. The coupling halves and adapters will conform to the sizes specified in the applicable table of the federal specification sheet, for the configuration shown on the accompanying figure and will be designated by a dash number.

2.5 Style. The coupling halves will have the following styles:

Style 1 - Style 1 couplings do not require the incorporation of a positive locking mechanism to lock the cam arms in the closed position but the cam arms will stay in the closed position when the coupling halves are assembled.

Style 2 - Style 2 couplings will incorporate a positive locking mechanism to lock the cam arms in the closed position when the coupling halves are assembled. The locking mechanism will be manually released (the release doesn't have to stay in the released position) before the cam arms can be moved to the open position.

Downloaded from http://www.everyspec.com

3. SALIENT CHARACTERISTICS.

3.1 Description. These coupling halves and adapters are suitable for use with suction hoses, discharge hoses, nozzles, and for various fittings and manifolds. Requirements shall be as defined herein and on the individual specification sheets. In the event that there is a conflict between the two documents, the specification sheet shall govern.

3.2 Materials. Materials shall be of sufficient durability to meet all performance requirements, in any of the environments, specified herein. Couplings and accessories shall not be made from hazardous materials (HazMats), ozone depleting substances (ODCs) or leach or otherwise develop toxins.

3.2.1 Fuel distribution service. Couplings and accessories shall be manufactured from any materials suitable for use with gasoline and the following diesel fuels and kerosene-based petroleum fuels. Copper or copper alloys shall not be used where it could come into contact with the fuel.

a. MIL-DTL-83133 (JP-8)(NATO F-34).
b. MIL-DTL-5624 (JP-5)(NATO F-44).
c. ASTM-D-975.
d. A-A-52557 Diesel-military, including NATO F-54).
e. ASTM-D-1655 (Jet A-1) (NATO F-35)
f. MIL-DTL-46162 (referee grade diesel and JP-8).

3.2.2 Drinking water service. Couplings and accessories shall be manufactured from any materials suitable for potable water service. Lead shall not be used. The components shall contain no materials or substances that could leak or disintegrate and cause the water to become non-potable. All surfaces that contact the water shall conform to the applicable Federal regulations for use with potable water.

3.2.3 Recovered materials. Recovered materials, collected from solid waste and reprocessed to become a source of raw material, may be used in the manufacture of the couplings (see 4). However, used, rebuilt, or re-manufactured components and parts shall not be incorporated

3.2.4 Dissimilar metals. The couplings and accessories shall be fabricated from compatible materials, inherently corrosion resistant or treated to provide protection against the various forms of corrosion and deterioration to which they are susceptible. Dissimilar metals except for stainless steel pins and key rings shall not be used in intimate contact with each other unless protected against galvanic corrosion.

3.3 Configuration. The coupling halves and fittings shall conform to these interface requirements.

3.3.1 Assemblies. The coupling half assembly shall conform to figure 1 and table I.

Downloaded from http://www.everyspec.com

3.3.2 Male coupling half. Male coupling halves shall conform to figure 2 and table II.

3.3.2.1 Wrenching surfaces. The flats or lugs on the coupling half shall be of sufficient size to permit a positive grip by standard tools for manipulation of the coupling half. A boss, or other means, to accept the ring of a retaining chain shall be incorporated on or adjacent to one of the flats or lugs. The ring attaching feature shall be of sufficient strength to withstand the repeated free fall of a dust cap in accordance with A-A-59326/10. It shall be of sufficient durability to withstand repeated use, without deformation, and shall not bind or abrade the ring.

3.3.3 Female coupling half. Female coupling halves shall conform to figure 3 and table III. For 6-inch coupling halves, more than two cam arms can be provided for the higher pressure rated coupling halves.

3.3.3.1 Pull rings. The cam arms shall incorporate assembled pull rings, of sufficient strength and durability to withstand repeated openings of the arms using the rings. The pull rings shall be made of corrosion resistant steels. Neither the rings nor arms shall be abraded or deformed, and the ring shall not bind, for the life of the coupling half (see 7.3).

3.3.4 Gaskets. Female coupling halves shall contain gaskets conforming to figure 4 and table IV. A "G" designation shall be used in Lieu of Type and Class designations for A PIN for a separate procurement (see 7.5). Gaskets will be designated by A-A-59326-G-XX.

3.3.5 Flanges. Flanges for types IV, VIII, and XX shall conform to figure 5. Threads shall be tapered NPT threads. See specification sheets for thread sizes.

3.4 Performance. The coupling assembly shall not leak or distort when subjected to the required hydrostatic pressure for 5 minutes.

3.4.1 Hydrostatic test pressure. Unless otherwise indicated on the specification sheet, 1/2- through 6-inch couplings shall withstand hydrostatic pressure of not less than 300 pounds per square inch gage (psig). Six-inch, 75 pounds per square inch (psi) rated, female cam-locking type coupling halves shall withstand a hydrostatic pressure of not less than 150 psi. Six-inch, 150 psi rated female cam-locking type coupling halves shall withstand a hydrostatic pressure of not less than 225 psi.

3.4.2 Working pressure. Unless otherwise indicated on the specification sheet, 1/2- through 4-inch couplings shall be rated for a minimum of 150 psi and 6-inch couplings shall have a minimum 75 psi and a minimum 150 psi ratings. The female 6-inch 150 psi rated coupling shall use more than two cam arms. Acquisition documents shall specify 75 psi or 150 psi working pressure for all 6 inch coupling halves (see 7.3).

3.4.3 Torque. The torque required to completely close each cam arm shall be as specified in table III, and the amount of gasket compression shall be as specified in table IV.

Downloaded from http://www.everyspec.com

3.4.4 Interchangeability. All parts having the same type and size, irrespective of manufacturer, shall be capable of being interchanged, without modification, with no impairment of functional or physical characteristics.

3.5 Identification marking. Couplings shall be legibly and permanently marked in 0.25 ± 0.03 inch high characters. On small fittings, characters shall be 0.130 ± 0.03 inch or the couplings may be identified on a securely attached tag or marked on the packaging medium. The markings shall include, as a minimum, the manufacturer's identification and a part number.

4. REGULATORY REQUIREMENTS. The offerer/contractor is encouraged to use recovered material to the maximum extent practicable, in accordance with paragraph 23.403 of the Federal Acquisition Regulation (FAR).

4.1 Regulations. The coupling halves shall comply with all applicable Federal and State mandatory requirements and regulations relative to the manufacture, packaging and labeling.

5. PRODUCT CONFORMANCE PROVISIONS. The products provided shall meet the salient characteristics of this commercial item description, conform to the producer's own drawings, specifications, standards, and quality assurance practices, and be the same product offered for sale in the commercial market. The Government reserves the right to require proof of such conformance.

5.1 Market acceptability. The item offered shall be of the latest model of the standard product of the supplier that shall have been used in the field for at least one year by commercial organizations.

5.2 Examination. Each coupling assembly shall be examined for compliance with requirements specified in 3.2 through 3.5. Any modification necessary following failure to meet the specified requirements shall receive particular attention for adequacy and suitability. This element of inspection shall encompass all examinations of performance and dimensional requirements. Non-compliance with any specified requirement, or the presence of one or more defects lessening required efficiency shall constitute cause for rejection.

6. PACKAGING. Preservation, packaging, packing, labeling, and marking shall be as specified in the contract or purchase order.

7. NOTES

(This section contains information of an explanatory nature that may be helpful but is not mandatory.)

7.1 Intended use. The quick disconnect couplings and accessories covered by this CID are primarily to be used in suction hose, discharge hose, and nozzles for various fittings and manifolds for the handling of liquid products, such as fuel, potable water, or waste water.

Downloaded from http://www.everyspec.com

7.2 Conformance data requirements. When this CID is used for procurement, the product conformance clause should appear in the solicitation.

7.3 Ordering data. The contract or order should specify the following:

a. Title, number, and date of this CID and the related federal specification sheet(s).
b. Type, Size, Class, style and the quantity required.
c. Component material designations (see 3.2).
d. When other than stainless steel pull rings are required (see 3.3.3.1 and 7.4.5).
e. For 6-inch coupling halves, the working pressure shall be specified as either 75 psi or 150 psi (see 3.4.2).
f. Packaging requirements (see 6).

7.4 Material specification. The contracting officer will select from the following options for materials and finishes.

7.4.1 Housings. Unless otherwise indicated on the specification sheet, materials used in the manufacture of the coupling assembly housings will be as follows:

Class A - Aluminum alloy - UNS A03560, A07120, or A07130 per ASTM B26.
Aluminum alloy - UNS A03560 in T6 Temper, A07120, or A07130 per ASTM B26 for castings and 2011, or 6061 per ASTM B211 for bar stock.

Class B - Copper alloy - UNS C83600, C83800, C84400, C90500, or C92200 per ASTM B61, B62, or B584, or copper alloy C37700 per ASTM B283.
Copper Alloy - UNS 37700, C83600, C83800, C84400, C90500, or C92200per ASTM B584 for castings or C36000 per ASTM B16 for bar stock, or copper alloy C37700 per ASTM B283.

Class BA - Aluminum Bronze - UNS C60600, C61300, C61400, C62400, C63000, C64200 or C64210 per ASTM B150, or per ASTM B148 for castings.

Class SS - Stainless steel - UNS S30400 or S31600 per ASTM A276 or A582 for bar stock or per ASTM A314 for forgings.
Stainless steel - UNS S30400 or S31600 per ASTM A276 or A582/479 for bar stock or per ASTM A314 for forgings and CF-8 or CF-8M per ASTM A743 / A743M for castings.

7.4.1.1 Finish. Unless otherwise indicated on the specification sheet, coupling assembly housings will be finished as follows:

Class A - Aluminum alloy - Anodic coating, non-dyed, 0.0004 inch minimum thickness.
Class B - Copper alloy - Plain (no finish).

Downloaded from http://www.everyspec.com

Class BA - Aluminum Bronze - Plain (no finish).
Class SS - Stainless steel - Plain (no finish) or per ASTM A351 for castings.

7.4.2 Gaskets. Gaskets will be of nitrile material for use in temperatures above -20° F. Nitrile gaskets will conform to ASTM D 2000, Grade M2BG610 B14EA14EF21F17Z1Z2.

Z1: The compression set after 22 hours @ 70°Centigrade will not exceed 60 percent when tested in accordance with ANSI/ASTM D 395.

When polyurethane is selected, use the following water resistance test:

Z2: After 14 days in distilled water @ 70°Centigrade the maximum change in strength will be 40 percent when tested in accordance with ANSI/ASTM D 471.

7.4.2.1 Temperatures for gaskets. For temperatures below -20° F gaskets will be of elastomers suitable for use up to -70° F.

7.4.3 Cam arm materials. Unless otherwise indicated on the specification sheet, materials used in the manufacture of the cam arms will be Copper Alloy UNS C36500, C37700, C46400, C48200, or C48500 per ASTM B124 for forgings, or Stainless Steel UNS S30400, or S31600 per B325 or CF-8, or CF-8M per ASTM A743, or suitable powdered metal per MPIF STD 35, or suitable investment cast metal to ASTM A351 or A743.

7.4.4 Cam pins. Unless otherwise indicated on the specification sheet, materials used in the manufacture of the cam pins will be CRES Alloy UNS S30323, S30300 per ASTM A582, or Class S30430 or S31600, condition A, per ASTM A276.

7.4.5 Pull rings. Unless otherwise indicated (see 3.3.3.1), materials used in the manufacture of the pull rings will be CRES Alloy UNS S30400 or S30200 per ASTM A313.

7.5 Part Identification Number (PIN). The following part identification numbering procedure is for government purposes and does not constitute a requirement for the contractor. Identification by cross-referenced numbering systems (see 7.6) will be acceptable.

The PIN to be used for a coupling half acquired using this CID, and associated federal specification sheets will be indicated in each federal specification sheet.

The PIN used for a gasket only using this CID is generated as follows: Gaskets conforming to this CID are interchangeable with gaskets conforming to MS 27030.

Downloaded from http://www.everyspec.com

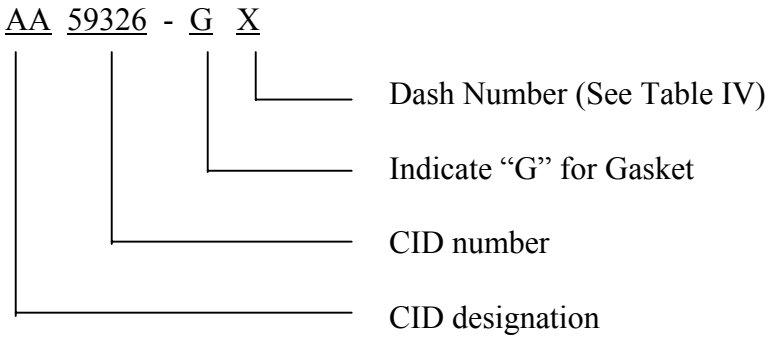

Example: AA59326G06 = A 2 Nominal size coupling gasket

7.6 Cross reference data. Coupling assemblies conforming to this CID are interchangeable with coupling assemblies conforming to MIL-C-27487. The following listing provides cross-references to the equivalent Military Standards.

CID Spec sheet	MIL-Standard sheet
A-A-59326/1	MS27020
A-A-59326/2	MS27021
A-A-59326/3	MS27022
A-A-59326/4	MS27023
A-A-59326/5	MS27024
A-A-59326/6	MS27025
A-A-59326/7	MS27026
A-A-59326/8	MS27027
A-A-59326/9	MS70091
A-A-59326/10	MS27028
A-A-59326/11	MS27029

CID Spec sheet	MIL-Standard sheet
A-A-59326/12	MS49000
A-A-59326/13	MS49001
A-A-59326/14	MS49002
A-A-59326/15	MS70088
A-A-59326/16	MS70096
A-A-59326/17	MS70095
A-A-59326/18	MS70097
A-A-59326/19	MS70100
A-A-59326/20	MS39336
A-A-59326/21	MS39352

7.7 International standardization. Certain provisions of this specification (dimensions) are the subject of international standardization agreements (STANAG No. 2761 and QSTAG 240). When amendment, revision, or cancellation of this specification is proposed, that will modify the international agreement concerned, the preparing activity will take appropriate action through international standardization channels, including departmental standardization offices, to change the agreement or make other accommodations (see specification sheets 1, 2, 4, 5, 7–14, and 16–21).

Downloaded from http://www.everyspec.com

7.8 Subject term (key word) listing.

Cam lok
Cam lock
Fitting
Hose coupling
Kamlok
Qdisc

7.9 Sources of documents.

7.9.1 The Code of Federal Regulations (CFR) may be obtained from the Superintendent of Documents, U.S. Government Printing Office, Washington, DC 20402 or website: www.access.gpo.gov

7.9.2 Copies of specifications A-A-52557 "Fuel Oil, Diesel; For Posts, Camps And Stations"; MIL-DTL-5624 "Turbine Fuel, Aviation, Grades JP-4, JP-5, AND JP-5/JP-8 ST"; MIL-DTL-46162 "Fuel, Diesel, Referee Grade"; and MIL-DTL-83133 "Turbine Fuels, Aviation, Kerosene Types, NATO F-34(JP-8), NATO F-35, AND JP-8 + 100" are available from Document Automation and Production Service, Building 4/D, 700 Robbins Avenue, Philadelphia, PA 19111-5094 or website: http://assist.daps.dla.mil/online

7.9.3 Copies of ANSI/ASME standards are available from the American National Standard Institute, 1819 L Street, NW, Washington, DC 20036 or website: http://www.ansi.org

7.9.4 Copies of ASTM-A276, "Standard Specification for Stainless Steel Bars and Shapes"; ASTM-A313, "Standard Specification for Stainless Steel Spring Wire"; A351, "Standard Specification for Castings, Austenitic, Austenitic-Ferritic (Duplex), for Pressure-Containing Parts Used in USDOE-NE Standards"; ASTM-D395, "Standard Test Methods for Rubber Property - Compression Set"; ASTM-A582, "Standard Specification for Free-Machining Stainless Steel Bars"; ASTM-A743, "Standard Specification for Castings, Iron-Chromium, Iron-Chromium-Nickel, Corrosion Resistant, for General Application"; ASTM-B124; "Standard Specification for Copper and Copper Alloy Forging Rod, Bar, and Shapes"; ASTM-D471, "Standard Test Method for Rubber Property - Effect of Liquids"; ASTM-D975 "Oils, Diesel Fuel" and ASTM-D1655 "Aviation Turbine Fuels" are available from ASTM International, PO Box C700, 100 Barr Harbor Dr., West Conshohocken, PA 19428-2959 or website: http://www.astm.org

7.9.5 Copies of "The Metals & Alloys in the Unified Numbering System (UNS)" are available from the Society of Automotive Engineers, Inc., 400 Commonwealth Drive, Warrendale, PA 15096-0001 or website: http://www.normas.com/ASTM/BOOKS/DS56H.html

7.9.6 Copies of "MPIF Standard 35" are available from the Metal Powder Industries Federation, 105 College Road East, Princeton, NJ 08540-6692 or website: http://www.mpif.org/

Downloaded from http://www.everyspec.com

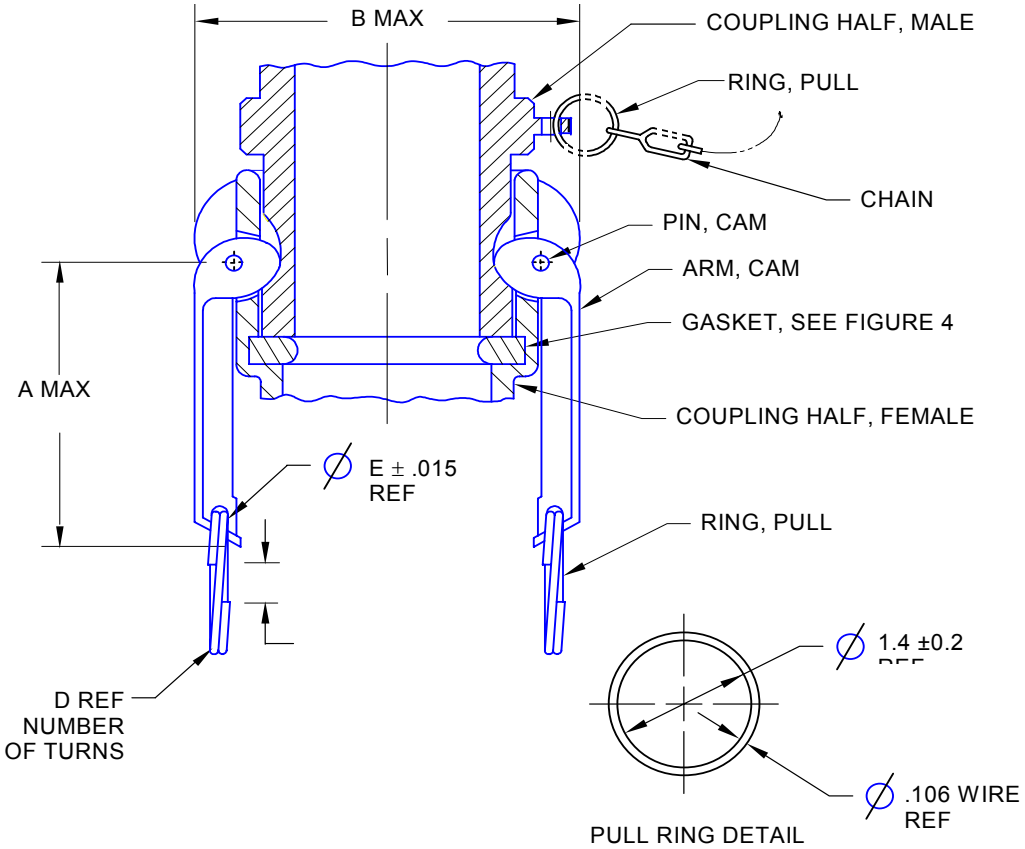

FIGURE 1. Coupling assembly, quick-disconnect, cam-locking type.

TABLE I. Coupling assembly, quick-disconnect, cam-locking type.

Nominal Size	Dimensions			
	A	B	D	E
1/2	1.50	2.88	2	0.156
3/4	1.50	2.88	2	0.156
1	1.75	3.00	2	0.156
1-1/4	3.00	3.69	2	0.156
1-1/2	3.00	3.94	2	0.156
2	3.00	4.38	2	0.156
2-1/2	3.00	4.88	2	0.156
3	3.25	5.75	3	0.250
4	3.25	6.88	3	0.250
6	4.25	8.94	3	0.250
Note: Dimensions are in inches, tolerance will be ± .02 for two place, ± .005 for three place decimals, unless otherwise specified hereon.				

Downloaded from http://www.everyspec.com

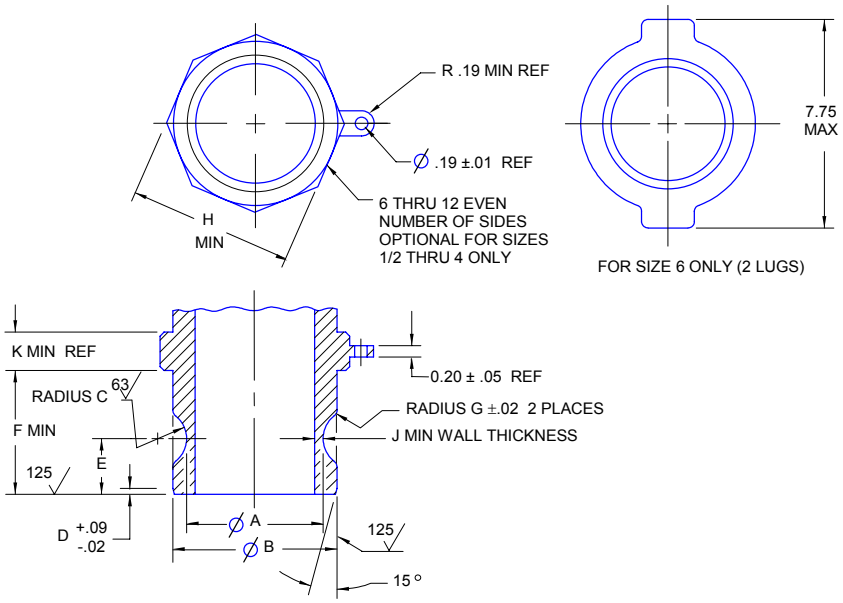

FIGURE 2. Coupling half, male.

TABLE II. Coupling half, male.

Nominal Size	Dimensions									
	A	B	C	D	E	F	G	H	J	K
1/2	1.035 1.030	1.264 1.259	.378 .372	0.09	.471 .465	1.00	0.06	1.264 1.259	.10	.58
3/4	1.035 1.030	1.264 1.259	.378 .372	0.09	.471 .465	1.00	0.06	1.264 1.259	.10	.58
1	1.144 1.139	1.446 1.441	.378 .372	0.13	.565 .559	1.32	0.09	1.446 1.441	.10	.58
1-1/4	1.388 1.383	1.792 1.787	.441 .435	0.13	.690 .684	1.56	0.12	1.792 1.787	.13	.58
1-1/2	1.690 1.685	2.105 2.100	.441 .435	0.13	.690 .684	1.62	0.12	2.105 2.100	.13	.58
2	2.065 2.060	2.484 2.479	.441 .435	0.13	.848 .842	1.87	0.12	2.484 2.479	.13	.58
2-1/2	2.545 2.540	2.985 2.980	.441 .435	0.19	.848 .842	1.94	0.12	2.985 2.980	.16	.75
3	3.202 3.197	3.604 3.599	.503 .497	0.19	.895 .889	2.00	0.12	3.604 3.599	.16	.75
4	4.307 4.302	4.708 4.703	.503 .497	0.22	.895 .889	2.07	0.12	4.708 4.703	.22	1.00
6	6.362 6.357	6.929 6.924	.659 .653	0.22	.963 .957	2.25	0.12	6.929 6.924	.25	1.00

Note: Dimensions are in inches; tolerance will be ± .02 for two place, ± .005 for three place decimals; angles ± 2°, unless otherwise specified hereon.

Downloaded from http://www.everyspec.com

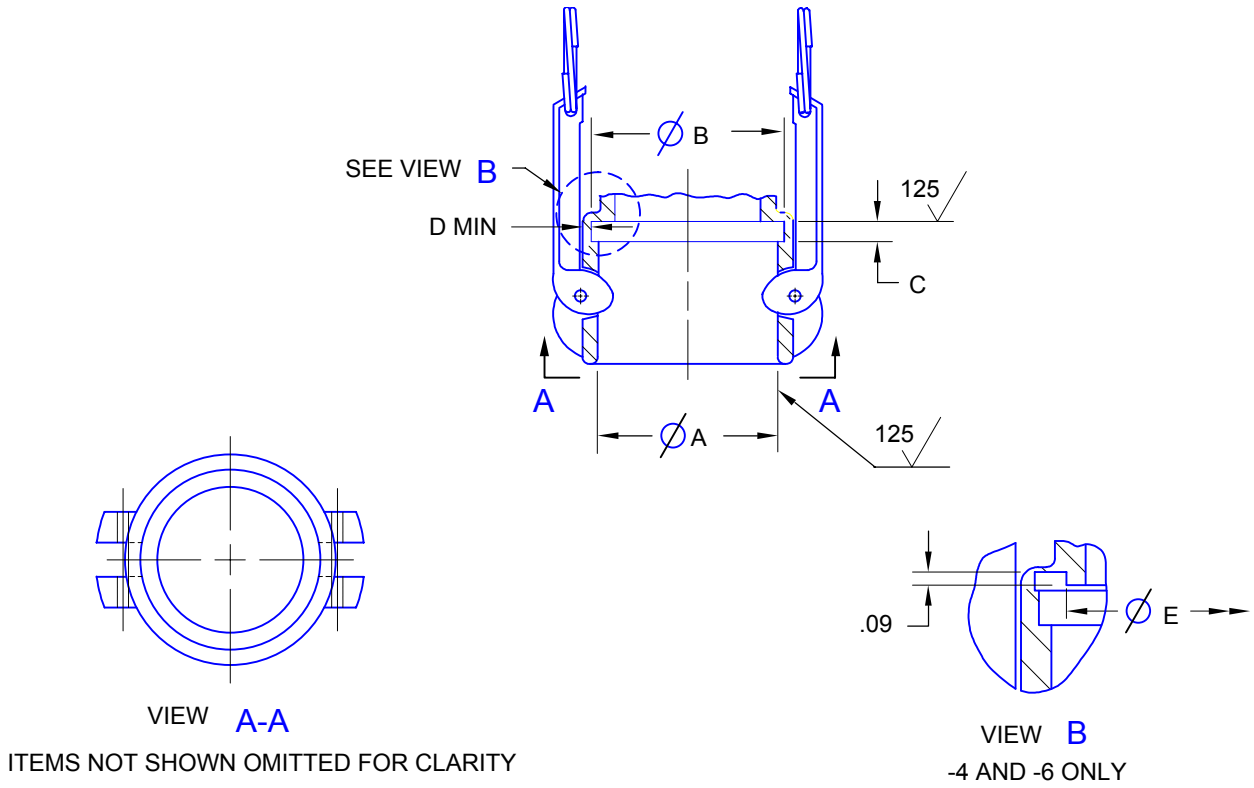

FIGURE 3. Coupling half, female.

TABLE III. Coupling half, female.

Nominal Size	Dimensions					Gasket (see figure 4)	Torque to close cam arms
	A	B	C	D	E		
1/2	1.276	1.42	.25	.094	NA	-1	60 inch lbs., max
3/4	1.276	1.42	.25	.094	NA	-2	60 inch lbs., max
1	1.466	1.59	.28	.094	NA	-3	70 inch lbs., max
1-1/4	1.812	2.00	.28	.125	NA	-4	100 inch lbs., max
1-1/2	2.125	2.25	.28	.125	NA	-5	100 inch lbs., max
2	2.510	2.69	.28	.125	NA	-6	100 inch lbs., max
2-1/2	3.011	3.19	.28	.156	NA	-7	100 inch lbs., max
3	3.630	3.78	.28	.156	NA	-8	120 inch lbs., max
4	4.734	4.94	.28	.219	3.906	-9	150 inch lbs., max
6	6.950	7.94	.28	.219	5.906	-10	200 inch lbs., max

Note: Dimensions are in inches; tolerance will be ± .02 for two place, ± .005 for three place decimals; angles ± 1° unless otherwise specified hereon.

Downloaded from http://www.everyspec.com

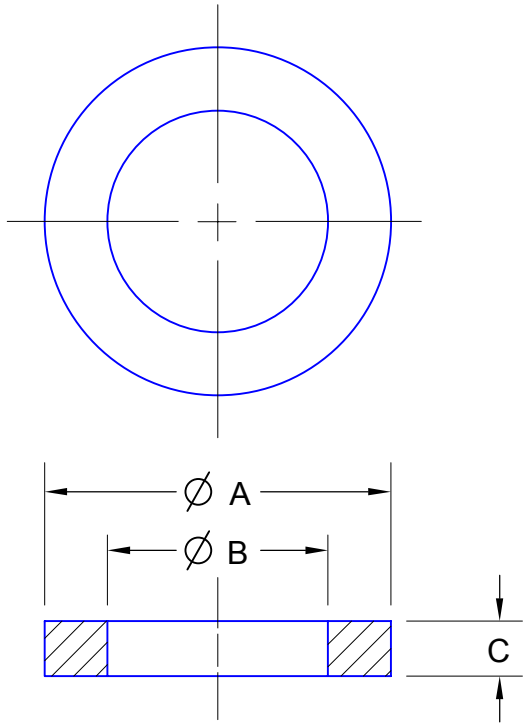

FIGURE 4. Gasket.

TABLE IV. Gasket dimensions and specifications.

Dash Number	Coupling Nominal Size	Dimension			Min. gasket compression
		A	B	C	
-1	1/2	1.375	.875	.218	0.025 Ref
-2	3/4	1.375	.875	.218	0.025 Ref
-3	1	1.563	1.063	.250	0.025 Ref
-4	1-1/4	1.938	1.359	.250	0.025 Ref
-5	1-1/2	2.188	1.625	.250	0.025 Ref
-6	2	2.625	2.000	.250	0.025 Ref
-7	2-1/2	3.125	2.375	.250	0.025 Ref
-8	3	3.719	3.000	.250	0.025 Ref
-9	4	4.875	4.000	.250	0.025 Ref
-10	6	7.063	6.000	.250	0.025 Ref
Note: Dimensions are in inches; tolerance will be ± .005 for three place decimals, unless otherwise specified hereon.					

Downloaded from http://www.everyspec.com

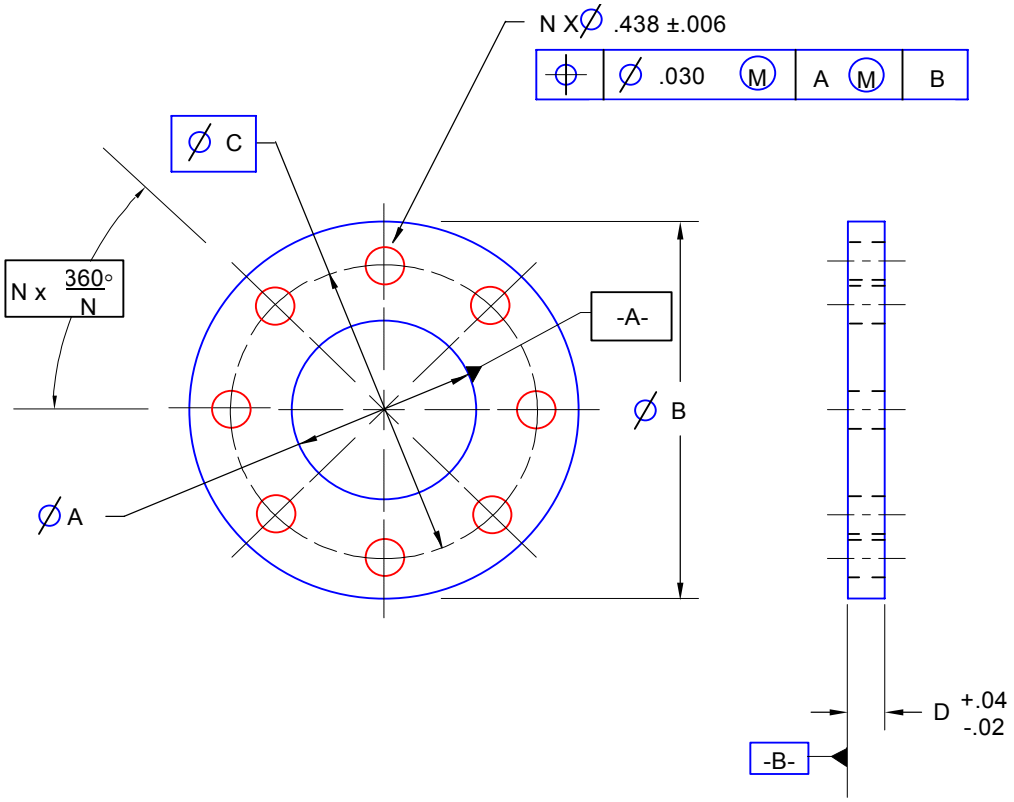

NOTE: For interpretation of geometric tolerancing symbology, see ASME Y14.5M.

FIGURE 5. Flange drilling template.

TABLE V. Flange dimensions.

Nominal size	Dimension				N (No. of holes)
	A	B	C	D	
2	2.00	4.500	3.750	.375	6
2-1/2	2.50	5.000	4.250	.375	6
3	3.00	5.625	4.875	.375	8
4	4.00	6.625	5.875	.375	8
6	6.00	8.875	8.125	.500	12
1 X 2	1.00	4.500	3.750	.375	6
2 X 3	2.00	5.625	4.875	.375	8
2 X 4	2.00	6.625	5.875	.375	8
3 X 4	3.00	8.625	5.875	.375	8
Note: Dimensions are in inches, tolerance will be ± .02 for two place, ± .005 for three place decimals, unless otherwise specified hereon.					

Downloaded from http://www.everyspec.com

MILITARY INTERESTS:

Custodians:
Army - AT
Navy - YD
Air Force - 99

Review Activities:
Army - AV, GL
Navy - MC, SH
Air Force - 71
DLA - CC

CIVIL AGENCY COORDINATING ACTIVITY:

GSA-FSS

Preparing Activity:
Army - AT

(Project 4730-2029)