METRIC

A-A-59002/2

31 May 1995
Superseding
MIL-L-24223/2
22 October 1986

COMMERCIAL ITEM DESCRIPTION

# LOUDSPEAKER, SHIPBOARD ANNOUNCING SYSTEMS ENCASED, 70.7 VOLT, 6 TO 15 VOLT-AMPERES

The General Services Administration has authorized the use of this commercial item description as a replacement for MIL-L-24223/2 which is canceled.

The requirements for acquiring the loudspeaker described herein shall consist of this specification and the latest issue of A-A-59002.

1. **Scope**. This Commercial Item Description covers requirements for exterior mounted loudspeakers for shipboard use in a typical outdoor application.

2. **Salient characteristics**.

2.1 **Dimensions and weight**. See figure 1.

2.2 **Reflecting horn**. A double reflecting horn is required.

2.3 **Protective screen**. A protective screen is not required.

2.4 **Drainage**. External and internal water drainage shall be provided for mounting angles from straight down to 45 degrees above horizontal.

2.5 **Enclosure**. In accordance with figure 1. Application is shipboard, unsheltered. Further determination of application shall be stated in the procument document.

2.6 **Reflector assembly**. Shall be removable for access to the speaker driver, transformer, terminal boards and switch which shall all be secured to the mounted portion of the enclosure.

2.7 **Cable entrance**. See figure 1. Cable shall be installed using stuffing tubes in accordance with the form, fit and function of figure 2. Stuffing tube shall be composed of polyamide nylon in accordance with ASTM D 4066 group 1, class 8 grade 1 for the body, washers, locknut, and cap. The packing assembly and o-ring shall be of neoprene. Threads shall be in accordance with FED-STD-H28. One hole shall be plugged.

2.8 **Peak volt-ampere capacity**. At least 2.5 times Table I maximum ampere input when tested in accordance with A-A-59002.

2.9 **Sound pressure output**. Sound pressure output in dB re 20 micropascals shall be as specified in Table I, with not more than the volt-ampere input specified in Table I, when measured as specified in A-A-59002.

2.10 **Coverage angle**. As designated in Table I.

AMSC N/A FSC 6320

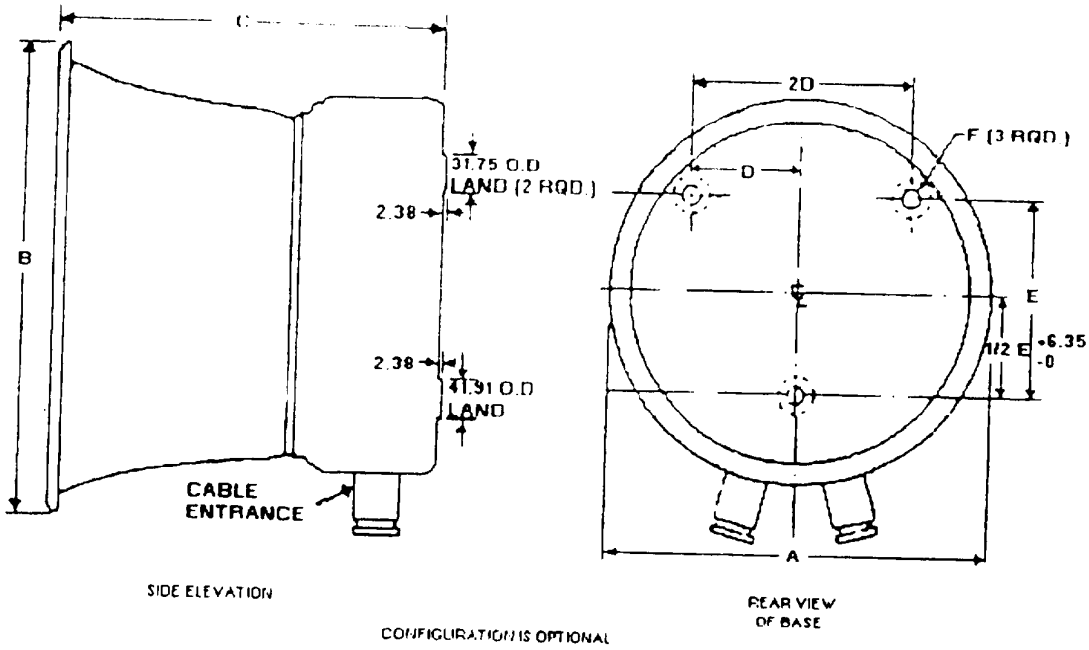


| | Maximum weight (kg) | Maximum dimensions (cm) | | | | | |
|---|---|---|---|---|---|---|---|
| | | A | B | C | D | E | F |
| LS 387( )/SIC<br>LS 388( )/SIC | } 9.98 | 32.1 | 32.1 | 25.4 | 7.46 | 13.0 | 1.11 |
| LS 535( )/SIC<br>LS 536( )/SIC | } 8.62 | 21.0 | 26.0 | 15.2 | 4.80 | 16.8 | 1.11 |

FIGURE 1. Loudspeaker.

TABLE I. Minimum on-axis sound pressure (rms dBp).

| Nomenclature | Distance to test MIC (meters) | Volt-ampere input (max) | Warble bands - Hz | | | | | 320 to 2000 Hz coverage angle (degrees) |
|---|---|---|---|---|---|---|---|---|
| | | | 500 to 800 | 800 to 1250 | 1250 to 2000 | 2000 to 3200 | 3200 to 5000 | |
| LS 387( )/SIC<br>LS 388( )/SIC | 3.048 | 7.5 | 104 | 108 | 109 | 106 | - | 50 |
| LS 535( )/SIC<br>LS 536( )/SIC | 1.524 | 7.5 | 99 | 103 | 106 | 108 | - | 90 |

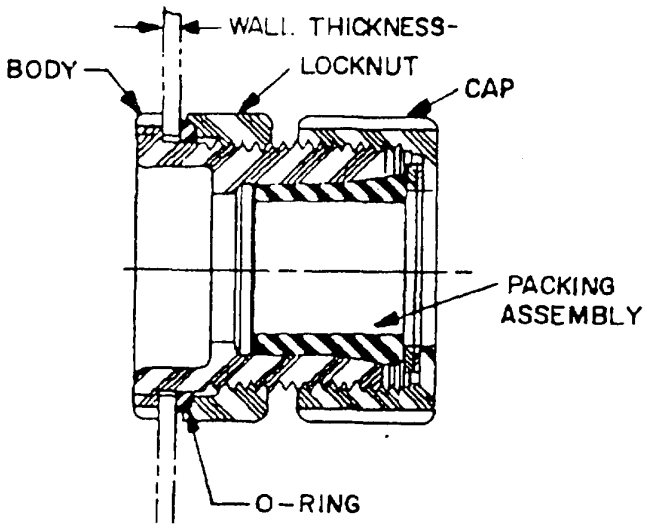


FIGURE 2. Stuffing tube.

2.11 **Frequency response**. Shall be within figure 3 limits over the band shown, for any volume setting.

2.12 **Temperature**. The operating temperature limits shall be -25°C to +65°C. THe non-operating temperature limits shall be -40°C to +70°C, for unsheltered shipboard use.

2.13 **Stray magnetic field**. Low stray magnetic field loudspeakers such as LS 535( )/SIC and LS 536( )/SIC shall not exceed 210 gamma (2.10 millioersted). All material except the permanent magnet shall be non-magnetic, having a permeability of 2.0, or less after fabrication.

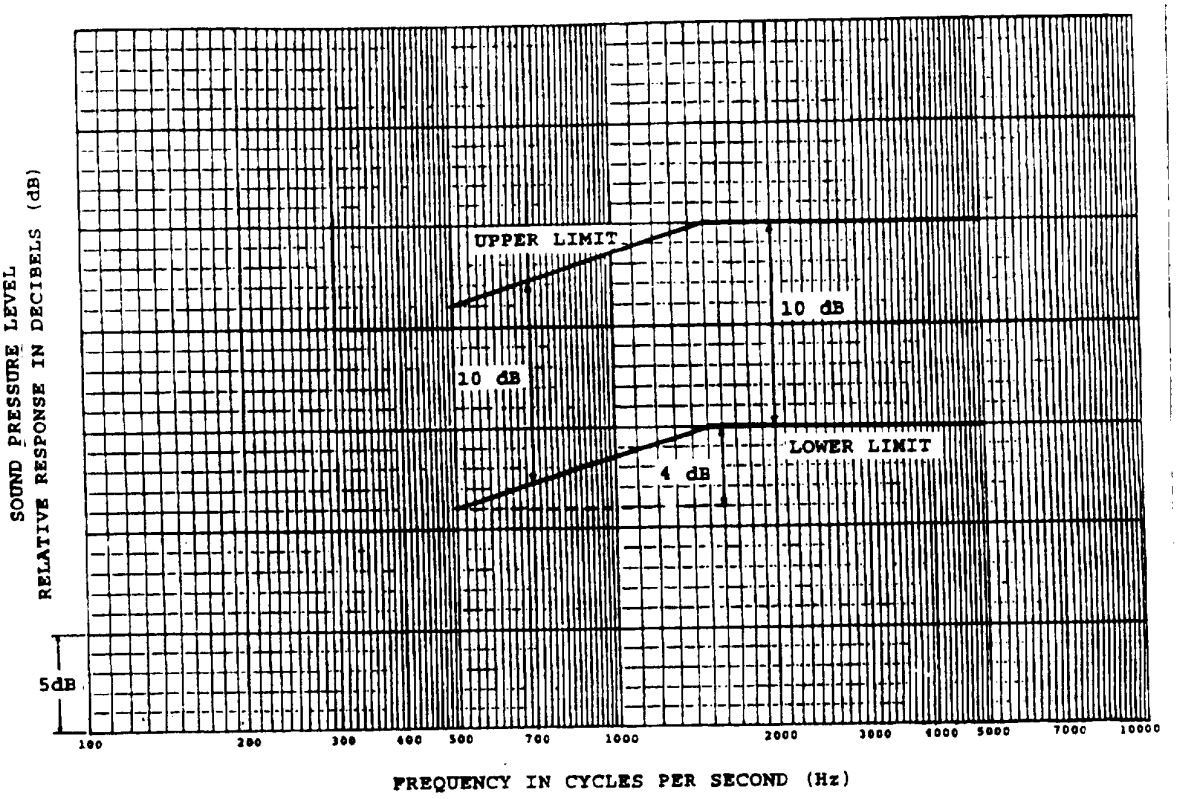


FIGURE 3. Frequency response.

Preparing Activity:
Navy - SH
(Project 6320-0043)