Downloaded from http://www.everyspec.com

[INCH-POUND]
A-A-55518/4D
10 December 2015
SUPERSEDING
A-A-55518/4C
17 March 2011

COMMERCIAL ITEM DESCRIPTION
SPECIFICATION SHEET

FUSEHOLDER, BLOCK, 30 AMPERES (A), 250 VOLTS (V) AC, 1 THROUGH 12 POLE, ACCOMMODATES 5AG OR 5AB TYPE FUSE CARTRIDGES

The General Services Administration has authorized the use of this commercial item description for all federal agencies.

The complete requirements for procuring the fuseholder blocks described herein shall consist of this document and the issue in effect of A-A-55518.

CLASSIFICATION OR PART OR IDENTIFICATION NUMBER (PIN). This commercial item description (CID) specification sheet uses a classification system which is included in the PIN as shown in the following example (see NOTES).

AA55518	/04	-	001
CID number	Applicable CID specification sheet (two digits)		Dash number

SALIENT CHARACTERISTICS.

Interface and physical dimensions. Fuseholder blocks supplied to this CID specification sheet shall be as specified herein (see figure 1).

Ampere rating. The ampere rating shall be 30 A maximum.

Voltage rating. The voltage rating shall be 250 V ac maximum.

Fuse accommodation. This fuseholder block accommodates 5AG or 5AB type fuse cartridges with dimensions of .406 inch x 1.50 inch (10.31 mm x 38.10 mm).

Fuseholder block base. The fuseholder block base shall be molded or laminated plastic.

Fuse clips. This fuseholder block shall be supplied with Commercial Item Description (CID) number AA55507/01-03 fuse clips.

Downloaded from http://www.everyspec.com

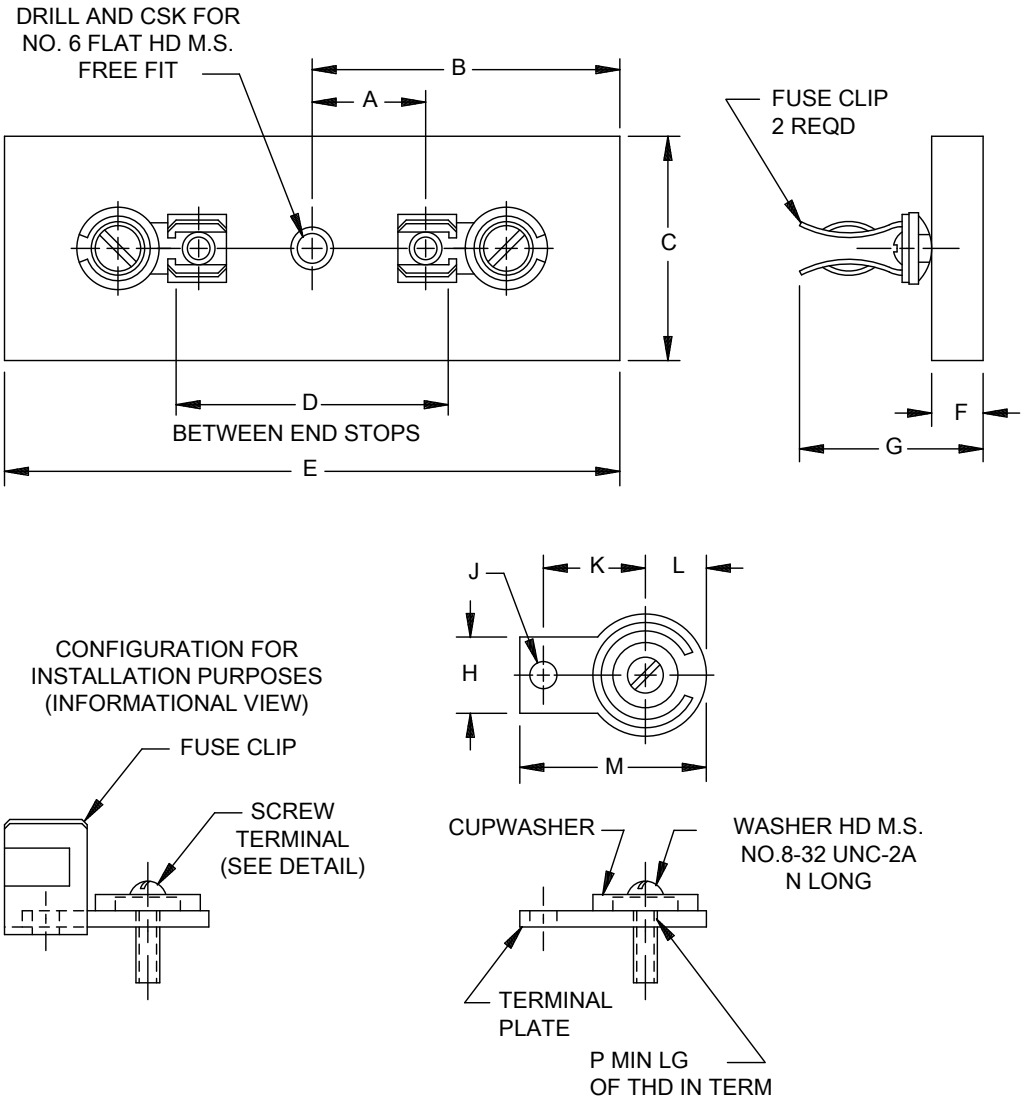

Dimensions									
Letter	Inches		mm		Letter	Inches		mm	
	Min	Max	Min	Max		Min	Max	Min	Max
A .760 ±.005	.755	.765	19.18	19.43	J .196 ±.005	.191	.201	4.85	5.11
B 1.380 ±.005	1.375	1.385	34.93	35.18	K .440 ±.005	.435	.445	11.05	11.30
D 1.530 +0.030, -0.00	1.530	1.560	38.86	39.62	L .220 ±.005	.215	.270	5.46	6.86
E 2.750 ±.005	2.745	2.755	69.72	69.98	M .810 ±.005	.805	.815	20.45	20.70
F .280 ±.005	.275	.285	6.99	7.24	N .060 ±.005	.055	.065	1.40	1.65
G 1.030 REF	---	---	---	---	P 1.52 min.	1.52	---	38.61	---
H .330 ±.005	.325	.335	8.26	8.51					

FIGURE 1. Configuration and dimensions (screw terminals).

Downloaded from http://www.everyspec.com

NOTES:

1. Dimensions are in inches.
2. Unless otherwise specified, tolerance is ±.005 inch (0.13 mm).
3. The following notes apply to width C of the fuseholder blocks (see table I).
   a. The longitudinal centerline of single pole and outer pairs of fuse clips of multiple pole fuseholder blocks shall be located .39 inch (9.9 mm) from the edge of the block.
   b. The distance between longitudinal centerlines of adjacent pairs of fuse clips shall be .91 inch (23.1 mm).
   c. A minimum of two mounting holes shall be provided on multiple pole fuseholder blocks. These holes shall be one each centrally located between the fuse clips on the longitudinal centerline of the outer pairs of fuse clips.

FIGURE 1. Configuration and dimensions (screw terminals) - continued.

TABLE I. Characteristics.

CID dash number AA55518/04-	Number of poles	Dimension C (see figure 1)	CID dash number AA55518/04-	Number of poles	Dimension C (see figure 1)
001	1	.84 (21.3)	007	7	6.66 (169.2)
002	2	1.81 (46.0)	008	8	7.62 (193.5)
003	3	2.78 (70.6)	009	9	8.59 (218.2)
004	4	3.75 (95.3)	010	10	9.56 (242.8)
005	5	4.72 (119.9)	011	11	10.53 (267.5)
006	6	5.69 (144.5)	012	12	11.50 (292.1)

NOTES.

PIN. The PIN should be used for Government purposes to buy commercial products to this CID specification sheet. See the classification section for PIN format example.

Source of document.

FEDERAL SPECIFICATIONS

A-A-55507/1 - Clip Electrical, Fuse, 30 to 60 Ampere for Fuse Diameters 1/4 Inch Thru 13/16 Inch.

(Copies of this document are available online at https://quicksearch.dla.mil/).

Downloaded from http://www.everyspec.com

Commercial products. As part of the market analysis and research effort, this CID specification sheet was coordinated with the following manufacturers of commercial products. At the time of CID specification sheet preparation and coordination, these manufacturers were known to have commercial products that would meet the requirements of this CID specification sheet. (NOTE: This information should not be considered as a list of approved manufacturers or be used to restrict procurement to only the manufacturers shown.)

MFR's CAGE	MFR's name and address
71400	Cooper Bussmann, LLC 114 Old State Road Ellisville, MO 63021-5915 Phone number (636) 394-2877 Facsimile number (800) 544-2570 E-mail: BussCustSat@eaton.com Uniform Resource Locator (URL): https://www.eaton.com

Part number (P/N) supersession data. These CID specification sheet PINs supersede the following MFR's P/N's as shown. This information is being provided to assist in reducing proliferation in the Government inventory system.

TABLE II. P/N supersession data.

CID dash number AA55518/04- (see table I)	MFR's CAGE	MFR's P/N 1/
001	71400	FH22AM
002	71400	FH22BM
003	71400	FH22EM
004	71400	FH22LM

1/ The manufacturer's P/N shall not be used for acquisition to the requirements of this CID specification sheet. At the time of preparation of this CID specification sheet, the aforementioned commercial products were reviewed and could be replaced by the CID PIN shown. For actual part marking requirements, see the marking paragraph of A-A-55518.

Downloaded from http://www.everyspec.com

National stock number (NSN). The following is a list of NSN's assigned which correspond to this CID specification sheet. The list is for information only and may not be indicative of all possible NSN's associated with the CID specification sheet. For up to date information on assigned NSN's, please contact the aforementioned DLA Land and Maritime office listed in A-A-55518.

TABLE III. NSN's.

Dash number (see table I) AA55518/04-	NSN	Dash number (see table I) AA55518/04-	NSN
001	5920-01-472-3583	007	N/A
002	N/A	008	N/A
003	N/A	009	N/A
004	N/A	010	N/A
005	N/A	011	N/A
006	N/A	012	5920-01-375-1236

Changes from previous issue. The margins of this CID are marked with vertical lines to indicate where changes from the previous issue were made. This was done as a convenience only and the Government assumes no liability whatsoever for any inaccuracies in these notations. Bidders and contractors are cautioned to evaluate the requirements of this document based on the entire content irrespective of the marginal notations and relationship to the last previous issue.

MILITARY INTERESTS:

Custodians:
Navy - EC
DLA - CC

CIVIL AGENCY COORDINATING ACTIVITY:

GSA - FAS

Preparing activity:

DLA-CC

Project 5920-2016-014

NOTE: The activities listed above were interested in this document as of the date of this document. Since organizations and responsibilities can change, you should verify the currency of the information above using the ASSIST Online database at https://assist.dla.mil.