Downloaded from http://www.everyspec.com

COMMERCIAL ITEM DESCRIPTION

CONNECTORS, ELECTRICAL, POWER, CRIMP TO WIRE SOCKETS

The General Services Administration has authorized the use of this commercial item description (CID)

Abstract This CID covers the general requirements for connectors, electrical, power, crimp to wire sockets This socket can be used in applications that require crimp to discrete stranded wires, size 14 AWG through 20 AWG Sockets covered by this CID are intended for commercial/industrial applications and shall not be used in military systems needing stringent environmental and electrical requirements

Part or Identifying Number (PIN) The PIN for the CID shall be as shown in the following example

A-A-55466	-	01
CID number		Dash number

Salient characteristics

CID sheet The electrical connectors shall be in accordance with the requirements specified herein

Design, construction, and dimensions Design, construction, and dimensions shall be as specified on figure 1 and table I

Operating temperature The operating temperature range shall be from -55°C to 105 C

Contact material Contact material shall be of brass or phosphor bronze

Plating Plating shall be pre-tin or 76 micron (30 microinches) minimum localized gold in contact area, over 1 27 microns (50 microinches) minimum of nickel

Mating force Connector mating force shall not exceed 13 34 newtons (3 pounds) solid pin styles and 6 67 newtons (1 5 pounds) split pin styles

Unmating force Connector unmating force shall not exceed 3 11 newtons (0 7 pound) minimum for solid pin styles and 2 22 newtons (0 5 pound) minimum for split pins

Contact insertion Contact insertion force shall be 17 79 newtons (4 pounds) maximum

Contact retention Contact retention force shall be 66 72 newtons (15 pounds) minimum

Durability Durability shall consist of 50 cycles of mating and unmating and upon completion the termination resistance, dry circuit, shall not exceed 3 6 milliohms There shall be no indication of physical damage

DISTRIBUTION STATEMENT A Approved for public release, distribution is unlimited

Downloaded from http://www.everyspec.com

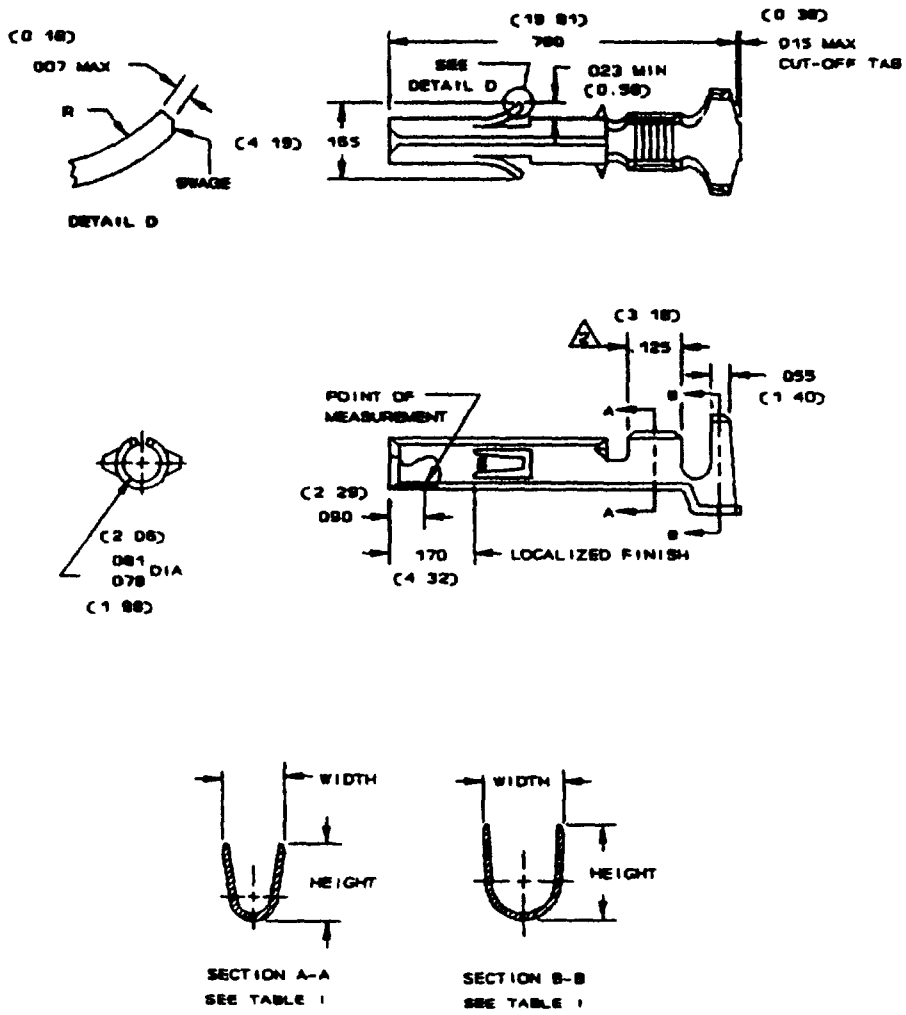

Figure 1. Socket, loose piece.

Downloaded from http://www.everyspec.com

Table I

CID dash number	Wire gage	Insulation range diameter	Wire barrel height A-A width height	Insulation barrel Height B-B width height
A-A-55466-01	24-18	040-.100	110/ 085 130/ 105	145/ 120 145/ 120
A-A-55466-02	24-18	040- 100	.110/ 085. 130/ 105	145/ 120 145/ 120
A-A-55466-03	24-18	040- 100	110/ 085 130/ 105	145/ 120 145/ 120
A-A-55466-04	24-18	040- 100	110/ 085 130/ 105	145/ 120 145/ 120
A-A-55466-05	20-14	060- 130	130/ 105 133 ref	170/ 145 178 ref
A-A-55466-06	20-14	060- 130	130/ 105 133 ref	170/ 145 178 ref
A-A-55466-07	20-14	060- 130	130/ 105. 133 ref	170/ 145 178 ref
A-A-55466-08	20-14	.060- 130	130/ 105 133 ref	170/ 145 178 ref
A-A-55466-09	20-14	060- 130	130/ 105. 133 ref	170/ 145 178 ref
A-A-55466-10	20-14	130- 200	130/ 105 145/ 120	240/ 215 240/ 215
A-A-55466-11	20-14	130-.200	130/ 105 145/ 120	240/ 215 240/ 215
A-A-55466-12	20-14	130- 200	130/ 105· 145/ 120	240/ 215 240/ 215
A-A-55466-13	20-14	130- 200	130/ 105 145/ 120	240/ 215 240/ 215
A-A-55466-14	20-14	130- 200	130/ 105. 145/ 120	240/ 215 240/ 215

NOTES

1 Dimensions are in inches
2 Millimeters are in parentheses
3 This item was designed using inch-pound units of measurement In case of problems involving conflicts between the metric and inch-pound units, the inch-pound units shall rule

Figure 1 Socket, loose piece -continued

Downloaded from http://www.everyspec.com

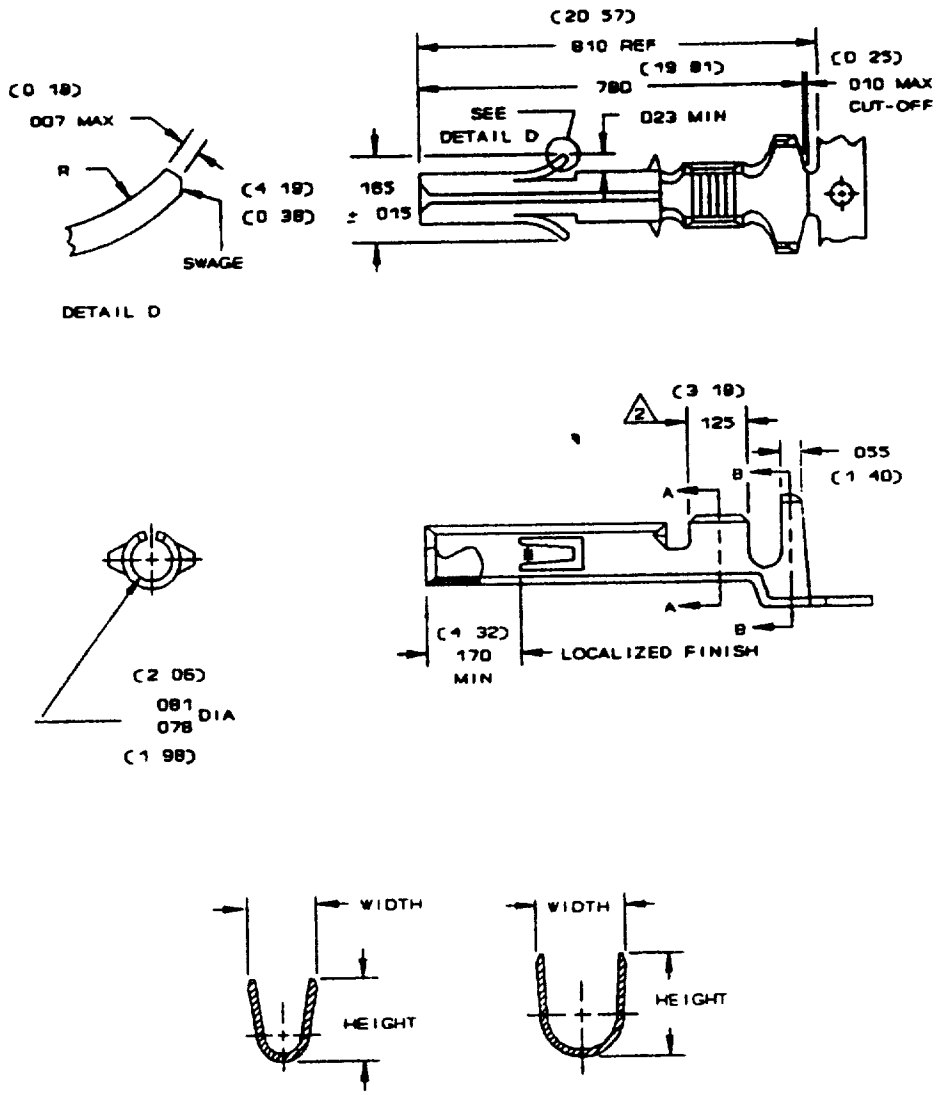

Figure 2 Socket, strip

Downloaded from http://www.everyspec.com

Table II

CID dash number	Wire gage	Insulation range diameter	Wire barrel height A-A width height	Insulation barrel Height B-B width height
A-A-55466-15	24-18	.040- 100	105/ 090 125/ 110	140/ 125 140/ 125
A-A-55466-16	24-18	.040- 100	105/ 090 125/ 110	140/ 125 140/ 125
A-A-55466-17	24-18	040- 100	105/ 090 125/ 110	140/.125 140/ 125
A-A-55466-18	24-18	040- 100	105/ 090 125/ 110	140/ 125 140/ 125
A-A-55466-19	24-18	040- 100	105/ 090 125/ 110	140/ 125 140/ 125
A-A-55466-20	20-14	.060-.130	.125/ 110 133 ref	165/ 150 178 ref
A-A-55466-21	20-14	060-.130	125/ 110 133 ref	165/ 150 .178 ref
A-A-55466-22	20-14	.060- 130	125/ 110 133 ref	165/ 150 178 ref
A-A-55466-23	20-14	060- 130	.125/ 110 133 ref	165/.150. 178 ref
A-A-55466-24	20-14	060- 130	125/ 110 133 ref	165/ 150 178 ref
A-A-55466-25	20-14	130- 200	125/ 110 133 ref	.235/.220 230 ref
A-A-55466-25	20-14	130- 200	125/ 110 133 ref	.235/.220 230 ref
A-A-55466-27	20-14	.130-.200	125/ 110 133 ref	235/ 220 230 ref
A-A-55466-28	20-14	130-.200	125/ 110 133 ref	235/ 220· 230 ref
A-A-55466-29	20-14	130- 200	125/ 110 133 ref	235/.220 .230 ref

NOTES

1 Dimensions are in inches
2 Millimeters are in parentheses
3 This item was designed using inch-pound units of measurement In case of problems involving conflicts between the metric and inch-pound units, the inch-pound units shall rule

Figure 2 Socket, strip - continued

Downloaded from http://www.everyspec.com

Crimp tensile strength The crimp tensile strength of the wire-to-contact termination shall not be less than the value specified in table III when tested at a cross-head parting speed of 25 millimeters (1 inch) per minute, maximum

Table III Crimp tensile strength

Wire size (AWG)	Tensile strength kilograms (pounds)
24	3 63 (8)
22	6 35 (14)
20	6 35 (14)
18	13 61 (30)
16	20 41 (45)
14	22 68 (50)

Dielectric withstanding voltage There shall be no breakdown of the insulating material when subjected to 5000 V ac for 1 minute between adjacent contacts of the mated connector assemblies

Vibration. The connector, or hardware when assembled to the connector, shall exhibit no evidence of breaking, cracking, or loosening of parts when subjected to vibration of 10-55-10 HZ traversed in 1 minute at 1 5 millimeters (06 inch) total excursion for 2 hours in each of three mutually perpendicular planes The contacts shall evidence no discontinuity greater than 10 microseconds and termination resistance not to exceed, dry circuit, 5 0 milliohms maximum

Physical shock The connector, or hardware when assembled to the connector, shall be subjected to 50 G's at 10 milliseconds, 3 shocks in each direction applied along the three mutually perpendicular planes, total 18 shocks The contacts shall evidence no discontinuity greater than 10 microseconds and termination resistance, dry circuit, not to exceed 6 0 milliohms

Thermal shock The connector, when mated, shall be subjected to 25 cycles between -55°C and 85°C dielectric withstanding voltage, 3 75 milliohms maximum termination resistance, dry circuit

Temperature-Humidity cycling The connector, when mated, shall be subjected to temperature-humidity cycling between 25°C and 65°C at 95 percent RH, with cold shock at -10°C during any 5 of the first 9 cycles

Corrosion Corrosion shall be 48 hours at 5 percent salt concentration. After exposure of the mated and unmated connectors, the termination resistance, dry circuit, shall not exceed 7 0 milliohms maximum

Regulatory requirements This section is not applicable to this CID

Quality assurance provisions

Responsibility for inspection Unless otherwise specified in the contract or purchase order, the contractor is responsible for the performance of all inspection, examination, and test requirements specified herein Except as otherwise specified in the contract or purchase order, the contractor may use his own or any other facilities suitable for the inspection requirements specified herein, unless disapproved by the Government The Government reserves the right to perform any of the inspections, examinations, or tests set forth in this description where such inspections, examinations, and tests are deemed necessary to assure supplies and services conform to prescribed requirements

Contractor certification statement The contractor shall certify and maintain objective quality evidence that the product offered meets the requirements of this CID, and that the product conforms to the producer's own drawings, specifications, standards, quality assurances practices, and is the same as the product provided as a bid sample The Government reserves the right to require proof of such conformance prior to the first delivery and thereafter as may be otherwise provided for under the provisions of the contract

Certificate of compliance A certificate of compliance shall accompany all parts supplied to this CID

Downloaded from http://www.everyspec.com

Packaging

Preservation, packaging, packing, labeling, and marking Preservation, packaging, labeling, and marking shall be as specified in the contract or purchase order

Notes This section contains relevant information which is useful to buyers, users and suppliers in the process of procuring the item, but is not mandatory

Ordering data Acquisition documents should specify the following

a CID document number and revision and CID PIN

b Quality assurance provisions

c Packaging requirements

d Color (if applicable)

Comments Comments on this CID should be directed to Defense Electronics Supply Center, 1507 Wilmington Pike, ATTN DESC-ELDI, Dayton, OH 45444-5270, or telephone (513) 296-5391

Sources of supply A suggested source of supply is listed in table IV Additional sources will be added as they become available

Table IV Suggested sources of supply.

Loose piece ordering data							
CID dash number	Vendor commercial PIN	Figure number	Wire gauge	Base material	Overplate	Under-plate	Vendor CAGE Number
A-A-55466-01	350689-1	1	24-18	Brass	Pre-tin	---	00779
A-A-55466-02	350689-2	1	24-18	Brass	Gold 1/	Nickel	00779
A-A-55466-03	350689-3	1	24-18	Ph Br	Pre-tin	---	00779
A-A-55466-04	350689-7	1	24-18	Brass	Gold 2/	Nickel	00779
A-A-55466-05	350550-1	1	20-14	Brass	Pre-tin	---	00779
A-A-55466-06	350550-2	1	20-14	Brass	Gold 1/	Nickel	00779
A-A-55466-07	350550-3	1	20-14	Ph Br	Pre-tin	---	00779
A-A-55466-08	350550-6	1	20-14	Ph. Br	Gold 2/	Nickel	00779
A-A-55466-09	350550-7	1	20-14	Brass	Gold 2/	Nickel	00779
A-A-55466-10	350551-1	1	20-14	Brass	Pre-tin	---	00779
A-A-55466-11	350551-2	1	20-14	Brass	Gold 1/	Nickel	00779
A-A-55466-12	350551-3	1	20-14	Ph Br	Pre-tin	---	00779
A-A-55466-13	350551-6	1	20-14	Ph Br	Gold 2/	Nickel	00779
A-A-55466-14	350551-7	1	20-14	Brass	Gold 2/	Nickel	00779

Downloaded from http://www.everyspec.com

Table IV Suggested sources of supply - continued

Strip form ordering data							
CID dash number	Vendor commercial PIN	Figure number	Wire gauge	Base material	overplate	Under-plate	Vendor CAGE Number
A-A-55466-15	350570-1	2	24-18	Brass	Pre-tin	---	00779
A-A-55466-16	350570-2	2	24-18	Brass	Gold 1/	Nickel	00779
A-A-55466-17	350570-3	2	24-18	Ph Br	Pre-tin	---	00779
A-A-55466-18	350570-6	2	24-18	Ph Br	Gold 2/	Nickel	00779
A-A-55466-19	350570-7	2	24-18	Brass	Gold 2/	Nickel	00779
A-A-55466-20	350536-1	2	20-14	Brass	Pre-tin	---	00779
A-A-55466-21	350536-2	2	20-14	Brass	Gold 1/	Nickel	00779
A-A-55466-22	350536-3	2	20-14	Ph Br	Pre-tin	---	00779
A-A-55466-23	350536-6	2	20-14	Ph Br	Gold 2/	Nickel	00779
A-A-55466-24	350536-7	2	20-14	Brass	Gold 2/	Nickel	00779
A-A-55466-25	350537-1	2	20-14	Brass	Pre-tin	---	00779
A-A-55466-26	350537-2	2	20-14	Brass	Gold 1/	Nickel	00779
A-A-55466-27	350537-3	2	20-14	Ph. Br	Pre-tin	---	00779
A-A-55466-28	350537-6	2	20-14	Ph Br	Gold 2/	Nickel	00779
A-A-55466-29	350537-7	2	20-14	Brass	Gold 2/	Nickel	00779

1/ 000030 inch of thick gold over nickel on inside of receptacle and wire barrel, remainder of contact is nickel plated

2/ 000030 inch of thick gold over nickel on inside of receptacle, remainder of contact is nickel plated

Downloaded from http://www.everyspec.com

Supersession data Supersession data shall be as specified in table V

Table V Supersession data

Superseded (old) PIN	Superseding (new) PIN A-A-55466	Superseded (old) PIN	Superseding (new) PIN A-A-55466
021	01	N/A	16
N/A	02	009	17
022	03	011	18
024	04	012	19
013	05	001	20
N/A	06	N/A	21
014	07	002	22
015	08	003	23
016	09	004	24
N/A	10	N/A	25
N/A	11	N/A	26
N/A	12	N/A	27
N/A	13	N/A	28
N/A	14	N/A	29
009	15		

Vendor CAGE number	Vendor name and address
00779	AMP Incorporated P O Box 3608 Harrisburg, PA 17105-3608

CIVIL AGENCY COORDINATING ACTIVITY

GSA - 7FXE

PREPARING ACTIVITY

DLA-ES

(Project 5935-D523)