Downloaded from http://www.everyspec.com

A-A-55464A
August 12, 1994
SUPERSEDING
A-A-55464
October 1, 1993

COMMERCIAL ITEM DESCRIPTION

CONNECTORS, ELECTRICAL, POWER, PLUG HOUSINGS, POLARIZED

The General Services Administration has authorized the use of this commercial item description (CID)

Abstract This CID covers the general requirements for connector, power, electrical plug housing This connector can be used in applications that require crimp to discrete stranded wires, size 14 AWG through 24 AWG. Connectors covered by this CID are intended for commercial/industrial applications and shall not be used in military systems needing stringent environmental and electrical requirements

Part or Identifying Number (PIN). The PIN for the CID shall be as shown in the following example:

A-A-55464	-	01
CID number		Dash number

Salient characteristics.

CID sheet. The electrical connectors shall be in accordance with the requirements specified herein

Design, construction, and dimensions Design, construction, and dimensions shall be as specified on figure 1 and table I

Operating temperature The operating temperature range shall be from -55°C to 105°C.

Current/voltage. Current/voltage shall be 600 V ac at 15 amperes maximum. Maximum rated current that can be carried is limited by the maximum operating temperature of the housing, which is 105°C and maximum temperature rise of contacts, which is 30°C. Variables shall be considered for each application are wire size, connector size, contact material, and ambient temperature.

Connector housings Connector housings are molded from a nylon material UL 94V-0 brick red for high impact and dielectric strength

Dielectric withstanding voltage There shall be no breakdown of the insulating material when subjected to 5000 V ac for one minute between adjacent contacts of the mated connector assemblies

Insulation resistance Insulation resistance shall be 1000 megohms minimum between adjacent contacts of mated connector assemblies.

Mating force Connector mating force shall not exceed 13.34 newtons (3 pounds) solid pin styles and 1.5 pounds for split pin styles, per contact

Unmating force Connector unmating force shall not exceed 3 11 newtons (0 7 pound) minimum for solid pin styles and 2.22 newtons (0.5 pound) minimum for split pin styles, per contact

Contact retention When an axial load is applied to the contact at the rate of 13 millimeters (5 inches)/minute, the contact retention force shall be 66 72 newtons (15 pounds) minimum

Durability. Durability shall consist of 50 cycles of mating and unmating and upon completion the termination resistance, dry circuit shall not exceed 3.6 milliohms There shall be no indication of physical damage

AMSC N/A FSC 5935

DISTRIBUTION STATEMENT A. Approved for public release; distribution is unlimited.

Downloaded from http://www.everyspec.com

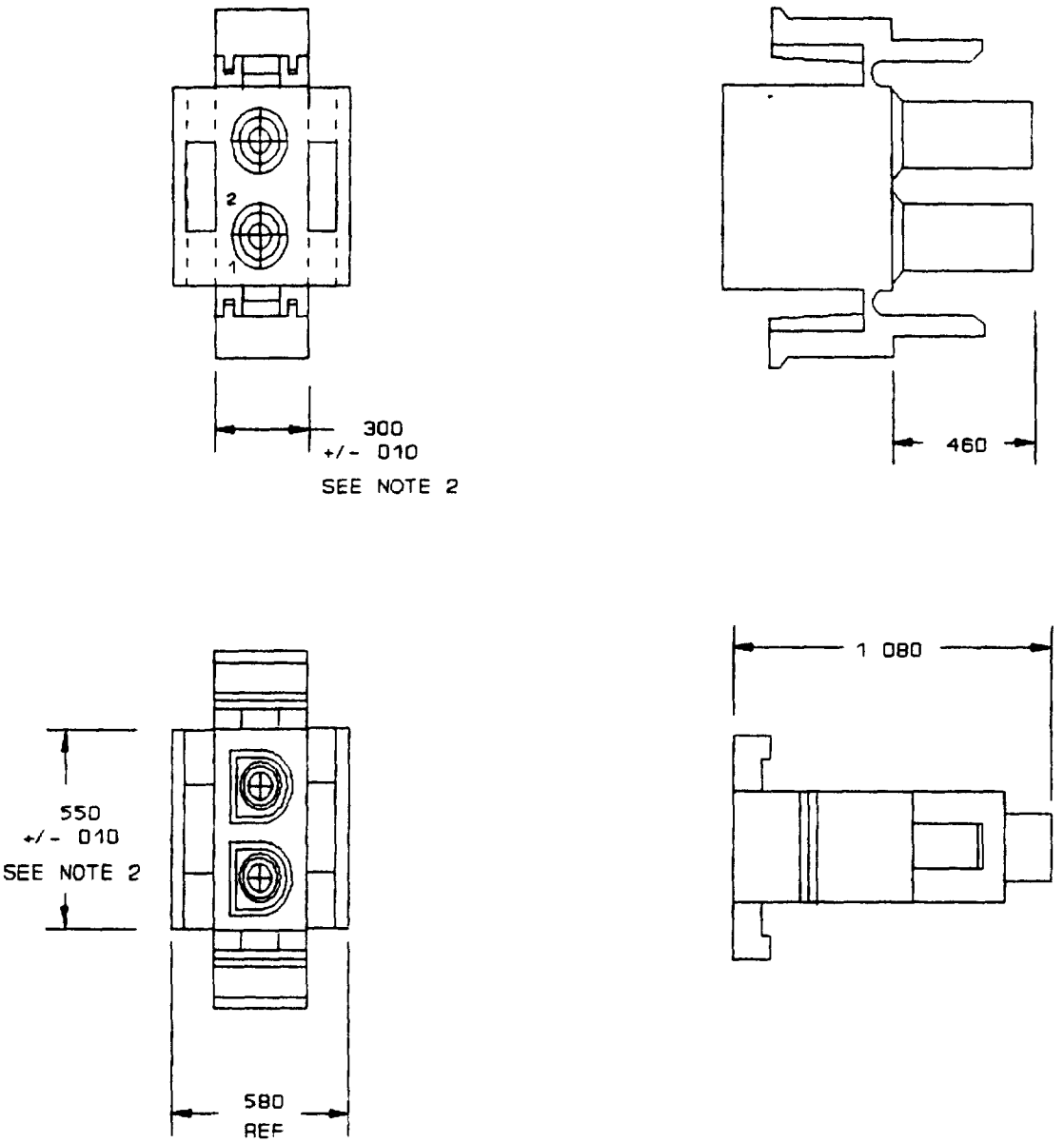

Configuration A

Figure 1. Dimensions and configurations

Downloaded from http://www.everyspec.com

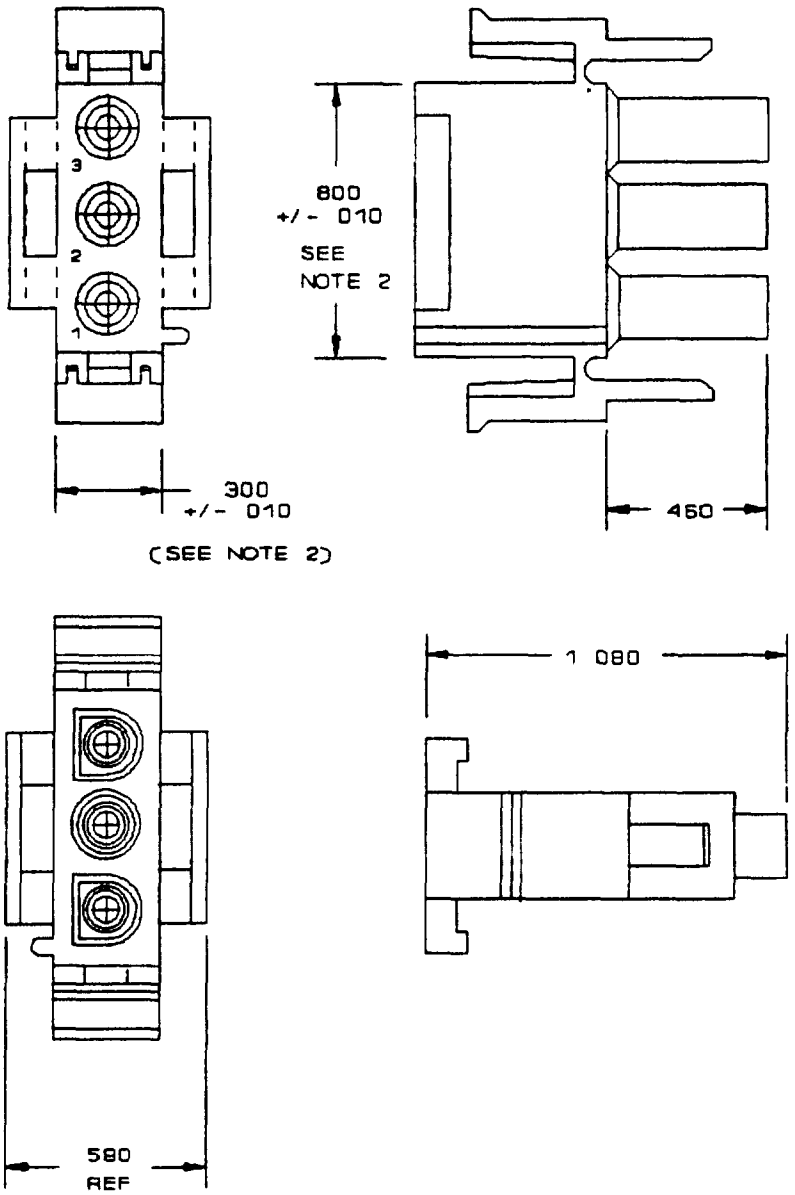

Configuration B

Figure 1 Dimensions and configurations - Continued.

Downloaded from http://www.everyspec.com

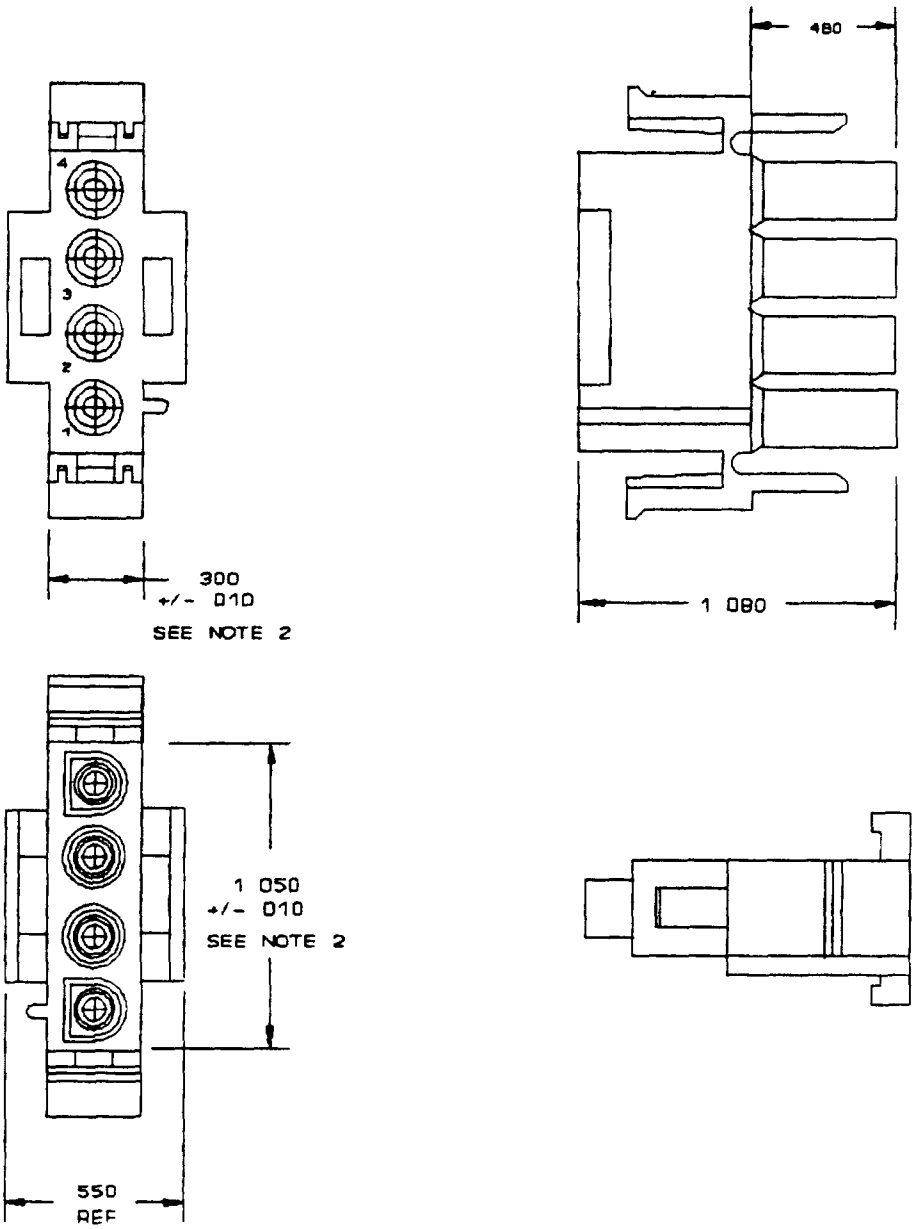

Configuration C

Figure 1. Dimensions and configurations - Continued.

Downloaded from http://www.everyspec.com

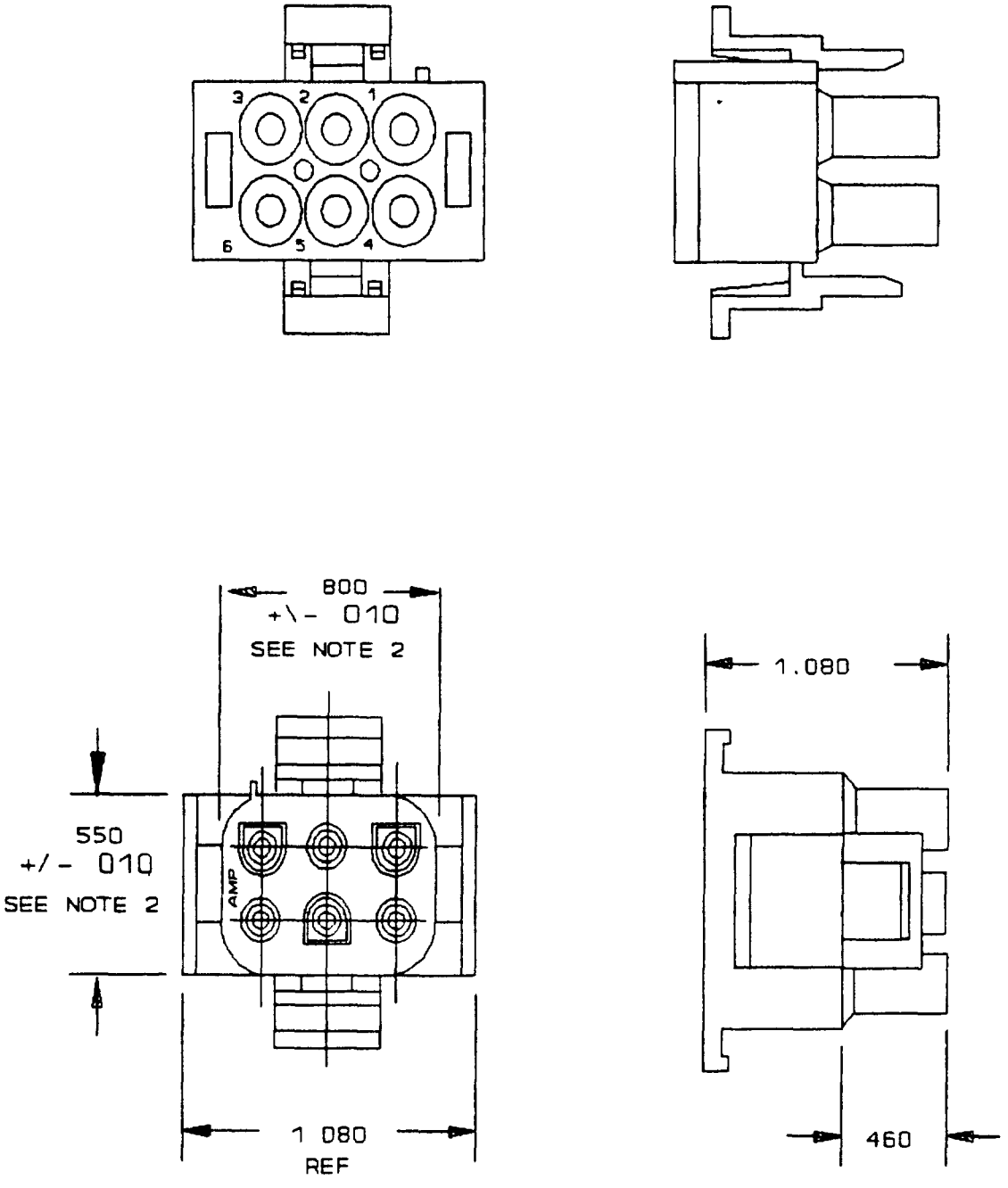

Configuration D

Figure 1. Dimensions and configurations - Continued

Downloaded from http://www.everyspec.com

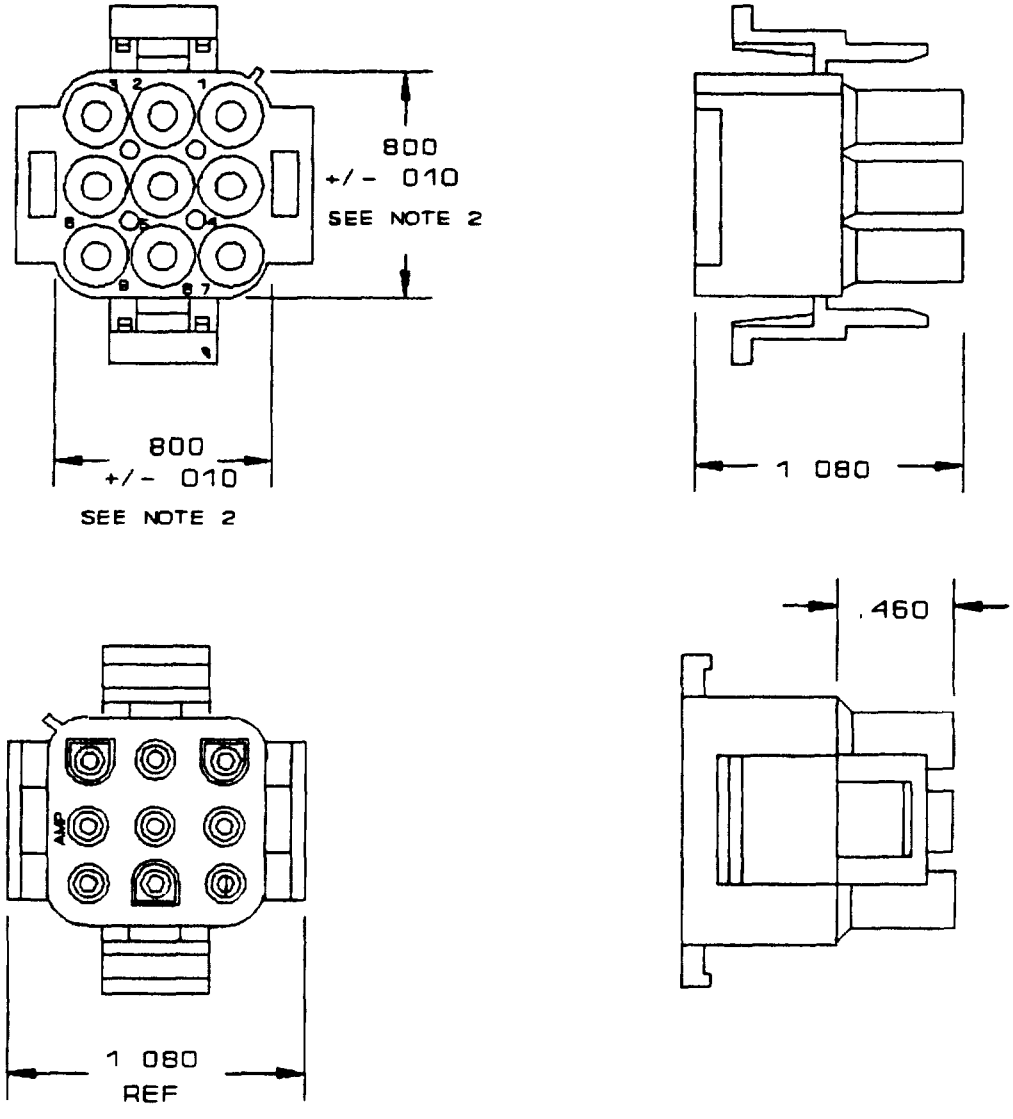

Configuration E

Figure 1. Dimensions and configurations - Continued

Downloaded from http://www.everyspec.com

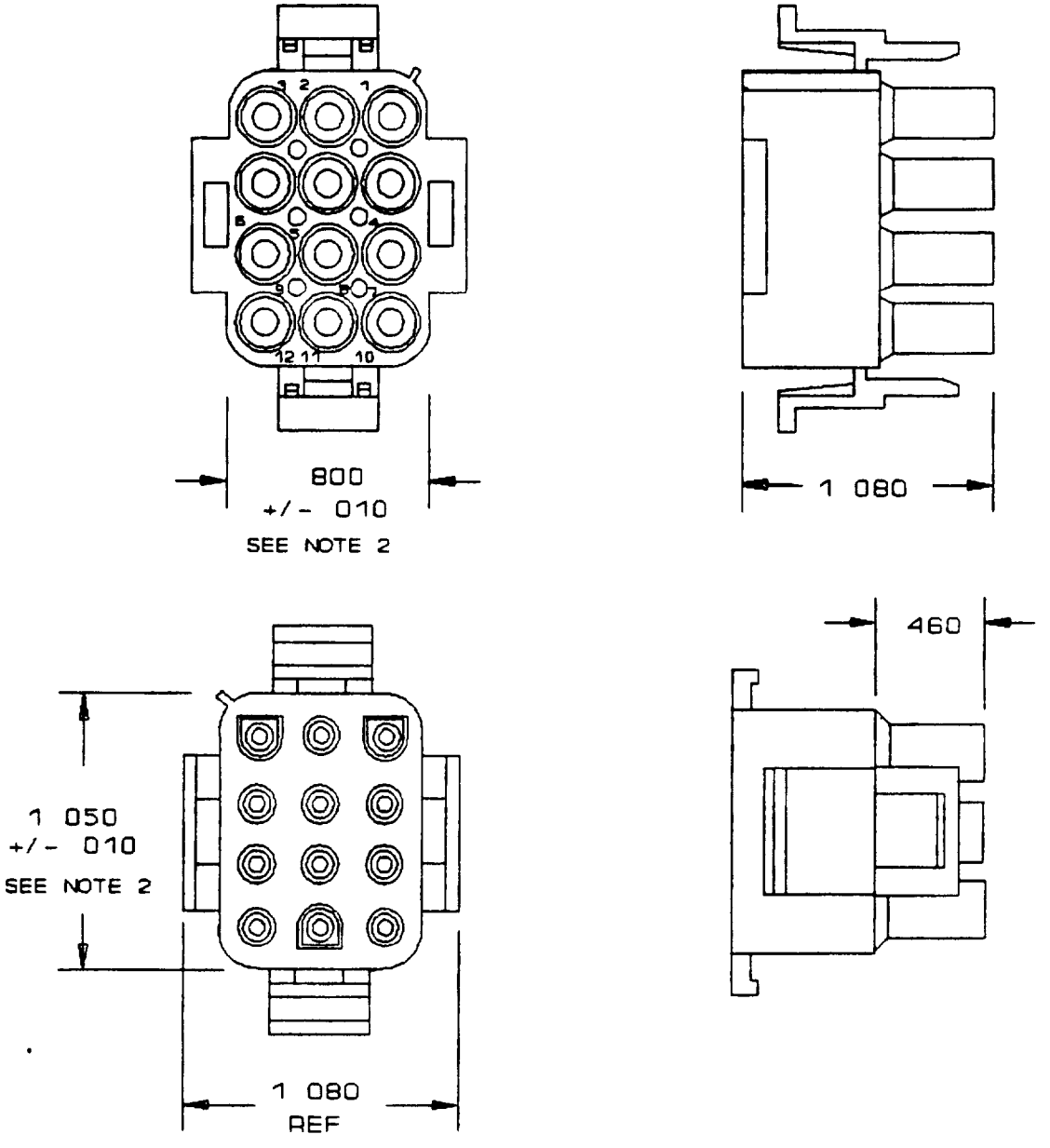

Configuration F

Figure 1. Dimensions and configurations - Continued.

Downloaded from http://www.everyspec.com

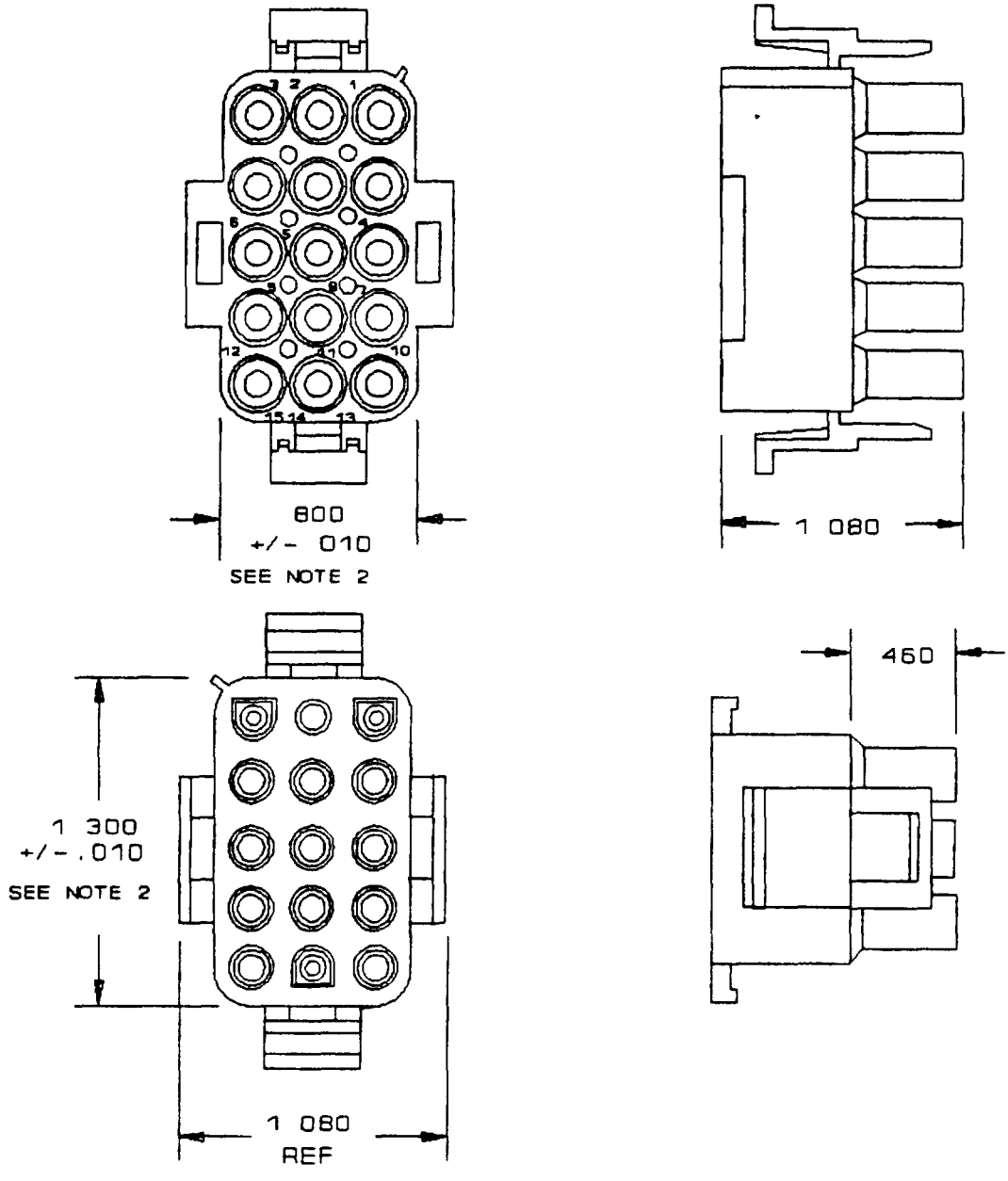

Inches	mm	Inches	mm	Inches	mm
.010	0.25	550	13 97	1.080	27 43
.300	7 62	580	14 73	1 300	33.02
460	11 68	800	20.32		

NOTES

1. Dimensions are in inches.
2. Dimensions indicated is as molded, additional growth due to subsequent moisture absorption may occur
3. Unless otherwise specified, tolerances are ± 015 inches

Configuration G

Figure 1. Dimensions and configurations - Continued.

Downloaded from http://www.everyspec.com

Vibration. The connector, or hardware when assembled to the connector, shall exhibit no evidence of breaking, cracking, or loosening of parts when subjected to vibration of 10-55-10 HZ traversed in 1 minute at 1.52 millimeters (.06 inch) total excursion for 2 hours in each of three mutually perpendicular planes The contacts shall evidence no discontinuity greater than 10 microsecond and termination resistance, dry circuit, 5 milliohms maximum

Physical shock. The connector, or hardware when assembled to the connector, shall be subjected to 50 G's at 10 milliseconds; 3 shocks in each direction applied along the three mutually perpendicular planes, total 18 shocks. The contacts shall evidence no discontinuity greater than 10 microsecond and termination resistance, dry circuit, 6.0 milliohms maximum

Thermal shock. The connector, when mated, shall be subjected to 25 cycles between -55°C and 85°C dielectric withstanding voltage, 3 75 milliohms maximum termination resistance, dry circuit

Temperature-humidity cycling The connector, when mated, shall be subjected to 25 cycles between 25°C and 65°C at 95 percent RH, with cold shock at -10°C during any 5 of the first 9 cycles.

Housing lock strength Housing lock strength shall be 155.69 newtons (35 pounds) minimum.

Regulatory requirements This section is not applicable to this CID

Quality assurance provisions

Responsibility for inspection Unless otherwise specified in the contract or purchase order, the contractor is responsible for the performance of all inspection, examination, and test requirements specified herein. Except as otherwise specified in the contract or purchase order, the contractor may use his own or any other facilities suitable for the inspection requirements specified herein, unless disapproved by the Government. The Government reserves the right to perform any of the inspections, examinations, or tests set forth in this description where such inspections, examinations, and tests are deemed necessary to assure supplies and services conform to prescribed requirements.

Contractor certification statement. The contractor shall certify and maintain objective quality evidence that the product offered meets the requirements of this CID, and that the product conforms to the producer's own drawings, specifications, standards, quality assurances practices, and is the same as the product provided as a bid sample The Government reserves the right to require proof of such conformance prior to the first delivery and thereafter as may be otherwise provided for under the provisions of the contract

Certificate of compliance A certificate of compliance shall accompany all parts supplied to this CID.

Packaging

Preservation, packaging, packing, labeling, and marking Preservation, packaging, labeling, and marking shall be as specified in the contract or purchase order

Notes. This section contains relevant information which is useful to buyers, users and suppliers in the process of acquiring the item, but is not mandatory.

Ordering data. Acquisition documents should specify the following:

a. CID document number and revision and CID PIN

b. Quality assurance provisions

c Packaging requirements.

d. Color (if applicable)

Comments Comments on this CID should be directed to Defense Electronics Supply Center, 1507 Wilmington Pike, ATTN DESC-ELDI, Dayton, OH 45444-5270, or telephone (513) 296-5391

Downloaded from http://www.everyspec.com

Sources of supply. A suggested source of supply is listed in table I. Additional sources will be added as they become available.

Table I. Suggested sources of supply.

CID dash number	Vendor commercial PIN	Vendor CAGE number
A-A-55464-01	350777-1	00779
A-A-55464-02	350766-1	00779
A-A-55464-03	350779-1	00779
A-A-55464-04	350715-1	00779
A-A-55464-05	350720-1	00779
A-A-55464-06	350735-1	00779
A-A-55464-07	350736-1	00779

Ordering data

CID dash number	Configuration	Number of positions
01	A	2
02	B	3
03	C	4
04	D	6
05	E	9
06	F	12
07	G	15

Supersession data Supersession data shall be specified on table II

Table II Supersession data

Superseded (old) PIN 87097-	Superseding (new) PIN A-A-55464-
002	01
004	02
006	03
008	04
010	05
012	06
014	07

Downloaded from http://www.everyspec.com

Vendor CAGE number	Vendor name and address
00779	AMP Incorporated P.O. Box 3608 Harrisburg, PA 17105-3608

CIVIL AGENCY COORDINATING ACTIVITY:

GSA - 7FXE

PREPARING ACTIVITY.

DLA-ES

(Project 5935-D521)