INCH-POUND
A-A-55202A
February 6, 1996
SUPERSEDING
A-A-55202
April 22, 1993

COMMERCIAL ITEM DESCRIPTION

HELMET, FIREMAN'S

The General Services Administration has authorized the use of this commercial item description as a replacement for MIL-H-1987 for all Federal agencies.

1. SCOPE. This commercial item description covers the requirements for helmets intended for use by fire fighters.

2. SALIENT CHARACTERISTICS

2.1 General description. The helmet shall consist of a helmet shell, suspension/retention assembly, energy absorbing system, ear and neck flap, and face shield. The helmet shall be constructed and tested in accordance with the National Fire Protective Association Standard (NFPA), National Fire Code Number 1972, and as specified herein.

2.2 Materials and components

2.2.1 Helmet shell. The helmet shell design shall be as illustrated in Figure 1 or as approved by the procurement activity. The color of the helmet shell shall be as required, pigmented with the required color during the molding process. Surface coating finishes may be applied where integral color is not feasible. The helmet shell shall be free of chips, cracks, blisters, or voids, and the outer surfaces shall have a uniform color and high luster finish. The shell may have a edge trim.

2.2.2 Metal components. All metal components shall be corrosion resistant or coated with a corrosion preventative compound or surface treatment and free of sharp edges or burrs. Painted surfaces shall be free from flaking, peeling, orange peel, sages, runs, or scratches exposing base metal.

Beneficial comments, recommendations, additions, deletions, clarifications, etc. and any data which may improve this document should be addressed to: Defense Personnel Support Center, Clothing and Textiles Directorate, Attn: DPSC-FNS, 2800 South 20th Street, Philadelphia, PA 19145-5099.

AMSC N/A FSC 8415

2.2.3 Suspension/retention assembly. The suspension/retention assembly shall include a headband and a sweatband. The headband shall be adjustable in 1/8 inch increments. The minimum size range shall be 6-1/2 to 8 (standard commercial designation) and shall be obtainable by the use of one or more headbands. The size range and adjustment points shall be marked on the headband in a permanent and legible manner. The surface of the headband, in contact with the wearer's head, shall not be less than one inch wide. The headband(s) shall be removable and replaceable. The sweatband shall cover the forehead portion of the headband. When the headband is adjusted to the maximum size, the sweatband shall not contact the helmet shell, and the headband shall not contact the helmet shell, except at the attachment points. Crown straps, if provided by the contractor's design, shall be adjustable for proper fit and maintain proper head height. All materials coming in contact with the wearer's head shall be non-irritating to normal skin. The color of the chinstrap and sweatband shall be as required by the procurement activity. The suspension retention assembly shall be tested for the following:

2.2.3.1 Suspension/retention assembly test. The suspension/retention assembly shall be tested in accordance with the following: The average minimum force required to separate the suspension assembly from the helmet shall be not less than 15 pounds (6.8 kg). The minimum force required to separate any individual attachment point of the suspension assembly from the helmet shell shall be 10 pounds (4.5 kg). The assembly shall be positioned and secured so that all attachment points of the suspension assembly are on a horizontal plane. Each attachment point of the suspension assembly to the helmet shell shall be tested by slowly applying a pull force in the direction required to release the mechanism with sufficient force to separate the attachment point from the helmet shell. Suggested techniques for applying the loads are shown in Figure 2. The force gauge shall be accurate to 0.25 pounds (0.1 kg). Care shall be taken to apply the pull force through the centerline at each attachment point. If the pull force is applied at any other angle the test results shall be unacceptable and the test shall be repeated. The individual and the average force shall be reported. Failure of the suspension assembly retention system to meet above requirements shall constitute failure of the test. For each sample unit a determination shall be made for each attachment point of the suspension assembly to the helmet shell and a determination of the average of all the individual determina- tions.

2.2.4 Energy absorbing system. The energy absorbing system shall be such that the helmet shall meet the design and performance characteristics specified herein and NFPA Standard 1972 except as follows:

a. From NFPA, exceed requirements in paragraphs, 4-1 and 4-1.1, Top Impact Requirement/Force Transmission (See subparagraph c for desired requirement values).
b. From NFPA, paragraph Top, Front, Side, and Back Impact Requirement-Acceleration, add: "The helmet shall show no evidence of cracking or fracture as a result of impact testing."
c. The maximum acceleration for the top impact location shall be 150 X Gn, 1475.5 m/sec/sec; 4830 ft/sec/sec in lieu of the specified requirements.

2.2.4.1 Impact-acceleration/Impact resistance of face shield. The requirement for impact-acceleration/impact-resistance shall be as specified in NFPA-1972, except as changed in subparagraphs b and c of paragraph 2.2.4. Testing for impact-acceleration shall be in accordance with NFPA-1972 except that the top impact site shall be within a 2-inch (51 mm) radius from the intersection of the midsagital plane and the bitragion-coronal arc extended to the surface of the helmet. The front, rear and side impact centers shall be 1 +1/2, -0 inches (25 +13, -0 mm) above the reference plane. The test anvil shall be steel. The striking face shall be a spherical segment with a radius of 1.9 $\pm$ 0.3 inches (48 $\pm$ 8 mm). The test shall be considered a failure if one or more impact-acceleration tests exceeds the maximum

acceleration specified in NFPA-1972 or if cracking or fracturing of the helmet occurs. (In the event of a dispute as to whether the helmet shell is cracked or fractured the helmet shell shall be subjected to and pass the electrical insulation test). A different helmet shall be used for impact resistance testing for each of the four exposure conditions. The headband shall be adjusted to obtain a snug fit with the head form. If the helmet design includes crown straps, the straps shall be properly adjusted to obtain contact with the top of the head form.

2.2.5 Ear and neck flap. The ear and neck flap shall be removable. The exterior color shall approximate the color of the helmet shell. Other colors may be used with the approval of the procurement activity/contracting officer.

2.2.6 Face shield. The helmet shall be furnished with a clear transparent face shield. It shall be attached to the helmet in such a manner that it can be pivoted and secured, in any position up or down. The face shield shall meet the performance requirements specified for Faceshields in American National Standards Institute (ANSI) Standard Z87.1 - Practice for Occupational and Educational Eye and Face Protection.

2.2.7 Weight. The weight of the helmet, excluding the face shield, ear and neck flap, and the optional shell edge trim, shall not exceed 35 ounces when weighed on a balance or scale graduated to within not more than 1/4 ounce (10g.). The weight of the complete helmet shall not exceed 42 ounces.

2.2.8 Fasteners and adjusting mechanisms. Fasteners and adjusting mechanisms used in the helmet suspension system shall be capable of operation or adjustment, as applicable, a minimum of one hundred times without any deterioration of effectiveness.

2.2.9 Physical requirements. The finished helmet shall conform to the requirements indicated in Table I.

Table I. - Physical requirements

Characteristic	Requirement	Test Method
Retention system		NFPA-1972
Durability of fasteners and adjusting mechanisms		1/ 2/
Water absorption	0.1 percent	NFPA-1972 3/
Flame resistance of helmet shell and face shield		NFPA-1972, ANSI Z87.1
Penetration resistance		NFPA-1972 5/ 6/
Heat resistance		NFPA-1972
Electrical insulation		NFPA-1972
Flame resistance of ear and neck flap		NFPA-1972 4/

1/ For each sample unit a determination shall be made for each fastener or adjusting mechanism of the helmet suspension assembly.
2/ Each fastener or adjusting mechanism of the helmet suspension assembly shall be opened and closed or secured and unsecured, as applicable, ten times. Any fastener or adjusting mechanism that indicates any evidence of deterioration of effectiveness by the tenth cycle shall constitute a failure.
3/ The helmet shell assembly consisting of the helmet shell and energy absorbing lining shall meet the water absorption requirement specified for helmets conforming to NFPA-1972.
4/ The ear and neck flap shall meet the flame resistance requirement specified in NFPA-1972 for ear covers.
5/ A different helmet shall be used for penetration resistance testing for each of the four exposure conditions.

6/ The headband shall be adjusted to obtain a snug fit with the head form. If the helmet design includes crown straps the straps shall be properly adjusted to obtain contact with the top of the head form.

2.2.9.1 Suspension assembly retention. For each sample unit a determination shall be made for each attachment point of the suspension assembly to the helmet shell and determination of the average of all the individual determination.

2.3 Label/marking - Identification markings and instructions (Government unique requirement). The identification markings listed below shall be permanently stamped on each headband assembly in characters 1/8 inch high minimum. The markings shall be clearly legible and shall not show smearing, bleeding or offsetting. The instructions shall include the proper procedure for adjusting and securing the helmet to the users head. The instructions and warning markings required in paragraphs 2-5.1 and 2-5.3 of NFPA 1972 shall also apply.

NOMENCLATURE:
CONTRACT NUMBER:
STOCK NUMBER:
CONTRACTOR:

2.4 Workmanship. The finished helmet shall conform to the quality of product established by this document. The finished helmet shall be complete, clean, and free of scratches, breaks, tears, holes, sharp edges and burrs. All snap fasteners, eyelets and rivets shall be securely set without damage to the surrounding material. Nylon webbing, when used in the construction of the helmet suspension system and not turned under, shall be fused to prevent fraying. When stitching is used in the construction of the suspension system, the following shall apply:

a. The ends of all stitching shall be backstitched or overstitched 1/2 inch minimum.
b. Thread breaks, or two or more consecutive skipped or runoff stitches shall be repaired by overstitching 1/2 inch minimum in each direction beyond the defective stitching area.
c. Thread tension shall be maintained so that there will be no loose stitching resulting in loose bobbin or top thread, or excessively tight stitching resulting in puckering of the materials sewn. The lock shall be imbedded in the materials sewn.
d. All thread ends shall be trimmed to a length of not more than 1/4 inch.

3.1 Regulatory requirements. The offeror/contractor is encouraged to use recovered materials in accordance with paragraph 23.403 of the Federal Acquisition Regulation (FAR) to the maximum extent practicable.

4. QUALITY ASSURANCE PROVISIONS

4.1 Product conformance. The products provided shall meet the salient characteristics of this commercial item description; and as applicable, conform to the producer's own specifications, standards and quality assurance practices, and be the same product offered for sale in the commercial market. The Government reserves the right to require proof of such conformance.

4.2 Market acceptance criteria. Acceptance criteria shall be as specified in the contract or purchase order. The helmet offered, or a generically similar helmet as described herein, must have been sold to the commercial market or to the Government for at least two years. The contractor shall certify and provide supporting documentation as to its serviceability and the long term (five (5) years) availability of all necessary maintenance and logistics support of parts and materials.

4.3 Warranty. The item offered shall include the standard warranty given to the commercial market beginning with the date of delivery of the individual item.

4.4 Visual examination. The helmet shall be examined for the defects listed below.

4.4.1 Defects. The helmet shall be examined for the following defects:

4.4.1.1 Suspension system: Any cut, tear or hole; headband or sweatband not replaceable type, i.e., cannot be removed; headband cannot be adjusted within the specified range; width of chin strap or headband less than specified; exposed ends of nylon webbing not fused (when applicable); color of any component not as specified.

4.4.2.2 Ear and neck flap: Not removable; not color specified.

4.4.2.3 Hardware: Broken or malformed, corroded, sharp edge or burr; any component improperly installed causing failure to serve intended purpose; on painted components - any flaking, peeling, orange peel, sags, runs or scratches exposing base metal; any snap fastener, eyelet, or rivet insecurely clinched or peened to the degree that separation may occur from the assembly, or excessively clinched or peened to the degree that materials are damaged; any snap fastener that does not function properly, i.e., fails to snap closed, or provide a secure closure or open freely.

4.4.2.4 Shell: Color not as specified or not uniform; any hole (other than required for assembly of suspension system to shell), any sharp edge or burr, any dimension that is not within the established tolerance.

4.4.2.5 Face shield: Not adjustable to any position or cannot be secured in a set position; any pit, bubble, scratch, void or blister, any crack, hole or break, not clear transparent.

4.4.2.6 Stitching: Thread breaks, or two or more consecutive skipped or runoff stitches not overstitched; thread ends not removed, no puckering of materials from loose stitch tension.

4.4.2.7 Identification markings: Label/markings missing, illegible, incorrect.

4.4.2.8 Cleanness: Grease or oil spot or stains on any component on inside and outside.

5. PACKAGING

5.1 Preservation, packing, and marking. The preservation, packing, and marking shall be as specified in the contract or purchase order.

6. NOTES

6.1 Figures. Figure 1 and 2 are furnished for information purposes only. If there are any inconsistencies between the written document and the figure, the written document shall govern.

6.2 NIB/NISH agencies otherwise qualified to supply this item shall be exempt from the requirements of 4.2 thru 4.2.4.

6.3 Source of Government documents. Copies of military and Federal documents are available from:

(Department of the Navy, Defense Printing Service,
Detachment Office, 700 Robbins Avenue, BLDG 4D,
Philadelphia, PA 19111-5093)

6.3.1 Source of non-Government documents

ANSI Z87.1 - Practice for Occupational and Educational Eye and Face Protection

(Application for copies should be should be addressed to American National Standards Institute (ANSI), 1430 Broadway, New York, NY 100180.)

NFPA 1972, Structural Fire Fighter's Helmets (NOTE: All numbered paragraphs referred to in this document are applicable to the 1992 Edition of NFPA 1972).

(Application for copies should be addressed to National Fire Protection Association (NFPA), 1 Batterymarch Park, Quincy, MA 02269-9101)

MILITARY INTERESTS:

Custodian
Army - GL

Review Activities
Army - MD

CIVIL AGENCY COORDINATING ACTIVITY:
GSA - FSS

PREPARING ACTIVITY:
DLA-CT

Project Number (8415-0975)

Note: Shell Design
Illustrative only and is not restrictive except that any deviations from the given dimensions must be approved by the Procuring Agency.

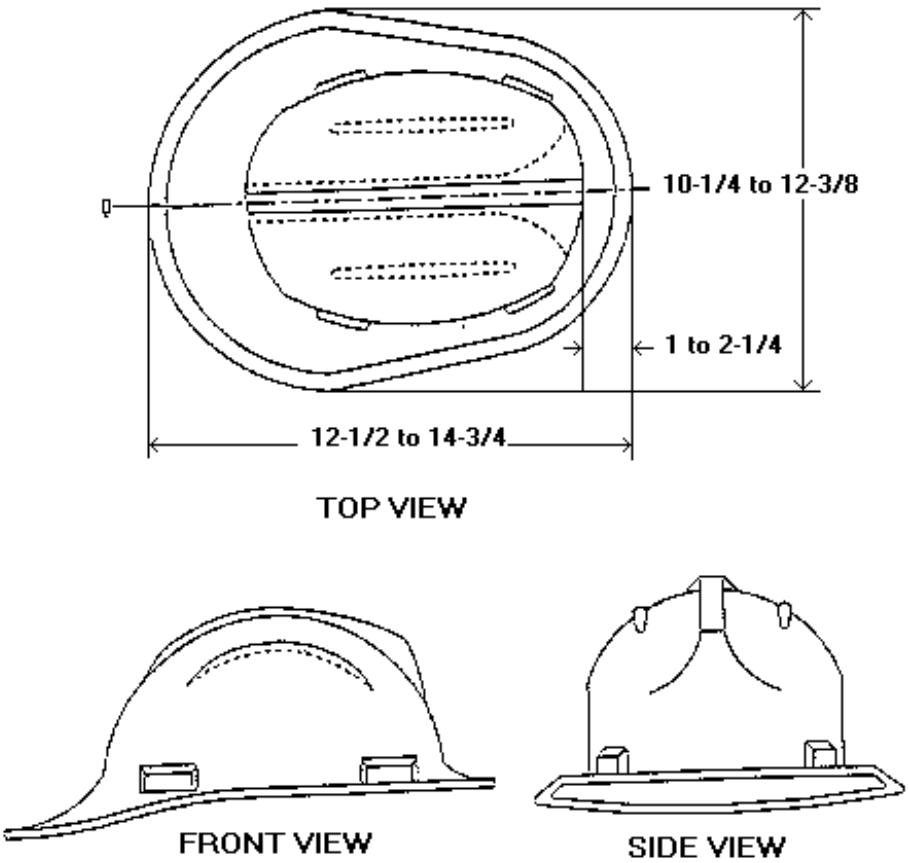

FIGURE 1. HELMET, FIREMAN'S

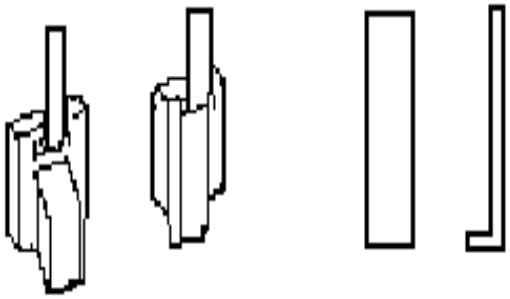

HOOK: Rigid material approximately 1/16 inch thick. Design optional to facilitate attachment to helmet and attachment of force gauge.

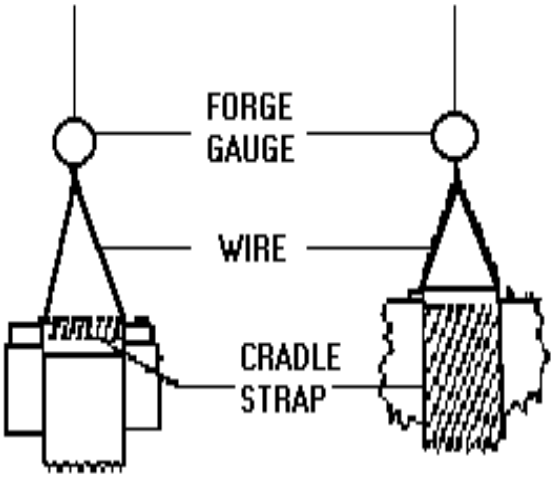

FIGURE 2. SCHEMATICS: Techniques for applying load for performance of suspension retention test (typical all suspension attachment points).