Downloaded from http://www.everyspec.com

METRIC

A-A-52475C
15 September 2014
SUPERSEDING
A-A-52475B
19 August 2013

COMMERCIAL ITEM DESCRIPTION

CHOCK, WHEEL

The General Services Administration has authorized the use of this commercial item description for all federal agencies.

1. SCOPE. This commercial item description (CID) covers the general requirements for wheel chocks. Wheel chocks covered by this CID are intended for commercial/industrial applications.

2. CLASSIFICATION/PART OR IDENTIFICATION NUMBER (PIN). This CID uses a classification system which is included in the PIN as shown in the following example (see 7.1).

AA52475	-	003	-	C
CID number		Dash code (See table I)		Camouflage code (See table II)

3. SALIENT CHARACTERISTICS.

3.1 Interface and physical dimensions. Wheel chocks supplied to this CID shall be as specified herein (see figure 1).

3.1.1 Types. Types shall be classified as follows (see table I and figure 1).

TABLE I. Type material CID dash code.

CID type code	Type	Material
001	Type I	Wood
002	Type II	Rubber or Wood
003	Type III	Cast or extruded, non-ferrous metal chock
004	Type II	Rubber
005	Type II	Wood

3.2 Design and construction. The wheel chocks shall be designed and constructed in accordance with figure 1.

Beneficial comments, recommendations, additions, deletions, clarifications, etc., and any data that may improve this document should be sent to: DLA Land and Maritime, ATTN: VAI, P.O. Box 3990, Columbus OH 43218-3990, or email fluidflow@.dla.mil. Since contact information can change you may want to verify the currency of the address information using the ASSIST Online database at https://assist.dla.mil.

3.2.1 Wheel chock characteristics.

Downloaded from http://www.everyspec.com

3.2.2 Wheel chock types.

3.2.2.1 Type I wheel chocks. Type I wheel chocks shall be made of laminated hardwood sections (maple, red, or white oak), each having 32 mm (1.259 in) minimum thickness.

3.2.2.2 Type II wheel chocks. Type II wheel chocks shall be made of vulcanized or synthetic rubber or laminated hardwood, sections each with 32 mm (1.259 in) minimum thickness. Industry alternate materials, such as, laminated rubber pads, fabric-reinforced rubber compounds; extruded rubber compounds, molded urethane, etc. may also be used.

3.2.2.3 Type III wheel chocks. Type III wheel chocks shall be made of cast or extruded non-ferrous metal, such as, aluminum, which is “spark-proof”. Chock block shall have one surface (that would normally be in contact with the tire) that has a curvature to match one of the mid-range current commercial truck tire sizes/diameters.

3.2.3 Chain assembly. The chain assembly shall be 2286 mm (90 inches) long minimum and shall be fabricated from the following components:

a. Steel chain size 5 mm or 3/16 inch (nominal).
b. Steel lap link size 5 mm or 3/16 inch (nominal).

3.2.4. Eye bolt. The eye bolt shall be fabricated from wrought iron or steel.

3.2.5. Snap hook. The snap hook shall be in accordance with NASM43770/6 PIN M43770/6MIZE1 or equivalent heavy duty snap hook 32 mm (1.250 in) size shall be made of ungalvanized, malleable iron.

3.2.6 Finish treatment.

3.2.6.1 Ferrous metal parts. All ferrous metal parts shall be zinc plated in accordance with ASTM A153/A153M before painting. Chain, bolts, nuts, washers, and eye bolt may be hot dipped galvanized in accordance with ASTM A123/A123M.

3.2.7 Paint.

3.2.7.1 Paint system. Wheel chocks and subcomponent parts shall be cleaned, primed, and painted (movable parts of snap hook shall not be primed or painted). The paint system applies to all surfaces, all exterior ferrous part surfaces, and all aluminum part surfaces. Rubber and “Rubber” compounds shall not be painted and shall be molded COLOR-BLACK. The following details shall apply:

a. Primer in accordance with MIL-DTL-53022.
b. Paint in accordance with MIL-DTL-53039 or MIL-DTL-64159.
c. Finish color shall be camouflage as specified in table II. Colors shall be in accordance with FED-STD-595.

Downloaded from http://www.everyspec.com

TABLE II. CID dash code for camouflage colors.

CID dash number	Camouflage colors	Chip number FED-STD-595
A	Green 383	34094
B	Black	37030 or 37038
C	Tan 686A	33446
D	Field Drab	33105
E	Earth Yellow	33245
F	Sand	33303
G	Aircraft Green	34031
H	Aircraft Gray	36300
K	Dark Sandstone	33510
M	Interior Aircraft Black	37031

3.3 Marking. Chock wheels supplied to this CID shall be marked with the manufacturer's (MFR's) standard commercial PIN. (NOTE: The part number marked on the unit pack shall be the CID PIN.)

3.3.1. Identification markings. Identification markings shall be permanent and legible and shall include, as a minimum, the manufacturer's CAGE code and part number, and the PIN (see section 2).

3.4 Recycled, recovered, environmentally preferable, or biobased materials. Recycled, recovered, environmentally preferable, or biobased materials should be used to the maximum extent possible, provided that the material meets or exceeds the operational and maintenance requirements, and promotes economically advantageous life cycle costs.

3.5 Workmanship. Chock wheels shall be processed in such a manner as to be uniform in quality and shall be free from other defects that will affect life, serviceability, or appearance.

4. REGULATORY REQUIREMENTS. The offeror/contractor is encouraged to use recovered materials to the maximum extent practicable, in accordance with 23.403 of the Federal Acquisition Regulation (FAR).

5. PRODUCT CONFORMANCE PROVISIONS

5.1 Product conformance. The products provided shall meet the salient characteristics of this CID, conform to the producer's own drawings, specifications, standards, and quality assurance practices, and be the same product offered for sale in the commercial market. The Government reserves the right to require proof of such conformance.

5.2 Certification. Certification must be done with the procuring activity approval. The contractor shall certify that the product offered meets the salient characteristics of the description and conforms to the producer's own drawings, specifications, standards, and quality assurance practices, and is the same as the product offered for sale in the commercial marketplace. The government reserves the right to require proof of such conformance prior to first delivery and thereafter as may be otherwise provided for under the provisions of the contract.

6. PACKAGING. Preservation, packing, and marking shall be as specified in the contract or order.

7. NOTES.

7.1 PIN. The PIN should be used for Government purposes to buy commercial products to this CID. See section 2 for PIN format example.

Downloaded from http://www.everyspec.com

7.2 Environmentally preferable material. Environmentally preferable materials should be used to the maximum extent possible to meet the requirements of this specification. As of the dating of this document, the U.S. Environmental Protection Agency (EPA) is focusing efforts on reducing 31 priority chemicals. The list of chemicals and additional information is available on their website http://www.epa.gov/osw/hazard/wastemin/priority.htm. Included in the EPA list of 31 priority chemicals are cadmium, lead, and mercury. Use of these materials should be minimized or eliminated unless needed to meet the requirements specified herein (see section 3).

7.3 Commercial and Government Entity (CAGE) code. For ordering purposes, inventory control, and submission of these chock wheel to DLA Land and Maritime under the Parts Management Advisory Team (PMAT), CAGE code 58536 should be used.

7.4 Source of documents.

FEDERAL STANDARD

FED-STD-595	-	Colors Used in Government Procurement
FED-STD-595/33105	-	Camouflage Field Drab
FED-STD-595/33245	-	Camouflage Earth Yellow
FED-STD-595/33303	-	Camouflage Sand
FED-STD-595/33446	-	Camouflage Tan 686A
FED-STD-595/33510	-	Camouflage Dark Sandstone
FED-STD-595/34031	-	Camouflage Aircraft Green
FED-STD-595/34094	-	Camouflage Green 383
FED-STD-595/36300	-	Camouflage Aircraft Grey
FED-STD-595/37030	-	Camouflage Black
FED-STD-595/37031	-	Camouflage Interior Aircraft Black
FED-STD-595/37038		Aircraft Black

DEPARTMENT OF DEFENSE SPECIFICATIONS

MIL-DTL-53022	-	Primer, Epoxy Coating, Corrosion Inhibiting Lead and Chromate Free
MIL-DTL-53039	-	Coating, Aliphatic Polyurethane, Single Component, Chemical Agent Resistant
MIL-DTL-64159	-	Camouflage Coating, Water Dispersible Aliphatic Polyurethane, Chemical Agent Resistant

(Copies of these documents are available online at http://quicksearch.dla.mil.)

FEDERAL REGULATIONS

FAR	-	Federal Acquisition Regulations (FAR)

(Copies of these documents are available online at www.acquisition.gov/comp/far/index.html or from the U.S. Government Printing Office, 732 North Capital Street, NW, Washington D.C. 20401.)

Downloaded from http://www.everyspec.com

Other Publications

ASTM INTERNATIONAL

ASTM A123/A123M	-	Standard Specification for Zinc (Hot-Dip Galvanized) Coatings on Iron and Steel Products
ASTM A153/A153M	-	Standard Specification for Zinc Coating (Hot-Dip) on Iron and Steel Hardware

(Copies of these documents are available online at http://www.astm.org or from the ASTM International, P.O. Box C700, 100 Barr Harbor Drive, West Conshohocken, PA 19428-2959.)

AEROSPACE INDUSTRIES ASSOCIATION (AIA)

NASM43770/6	-	Snap Hooks, Cast Body, Swivel Eye, Sliding Bolt Closure

(Copies of these documents are available online at http://www.aia-aerospace.org or from the Aerospace Industries Association, 1000 Wilson Boulevard, Suite 1700, Arlington, VA 22209-3928, Tel: 703-358-1000.)

7.5 Ordering data. The contract or order should specify the following:

a. CID document number, revision, and CID PIN.

b. Product conformance provisions.

c. Packaging requirements.

Downloaded from http://www.everyspec.com

7.6 Commercial products. As part of the market analysis and research effort, this CID was coordinated with the following manufacturers of commercial products. At the time of CID preparation and coordination, these manufacturers were known to have commercial products that would meet the requirements of this CID. (NOTE: This information should not be considered as a list of approved manufacturers or be used to restrict acquisition to only the manufacturers shown.)

MFR's CAGE	MFR's name and address
02769	Lockheed Martin Corporation 199 Borton Landing Rd Moorestown, NJ 08057-3054 Debbie Kister deborah.p.kister@lmco.com (856) 722-4615 James V. Amatrudi james.v.amatrudi@lmco.com (856) 608-6370
4Q9G1	Mt Mejia Services Inc. Pareen Damji 12990 Branford Street, Unit J Arleta, CA, 91331 pareen@mtmserv.com (818) 618-1683 MIGUEL T. MEJIA emeteeme4@yahoo.com (818) 618-1683
4D937	PPI Industries Corp. 11649 Pendleton St Sun Valley, CA 91352-2502 http://www.ppisupply.com Shiraz Damji shiraz@goppi.com (818) 768-5665 SAL DAMJI sdamji@goppi.com (818) 768-5665

7.7 Government users. To acquire information on obtaining these CHOCK, WHEEL, from the Government inventory system, contact DLA Land and Maritime, ATTN: DLA Land and Maritime Call Center (-NAB), P.O. Box 3990, Columbus, OH 43218-3990 or telephone (614) 692-2271 or (614) 692-3191).

Downloaded from http://www.everyspec.com

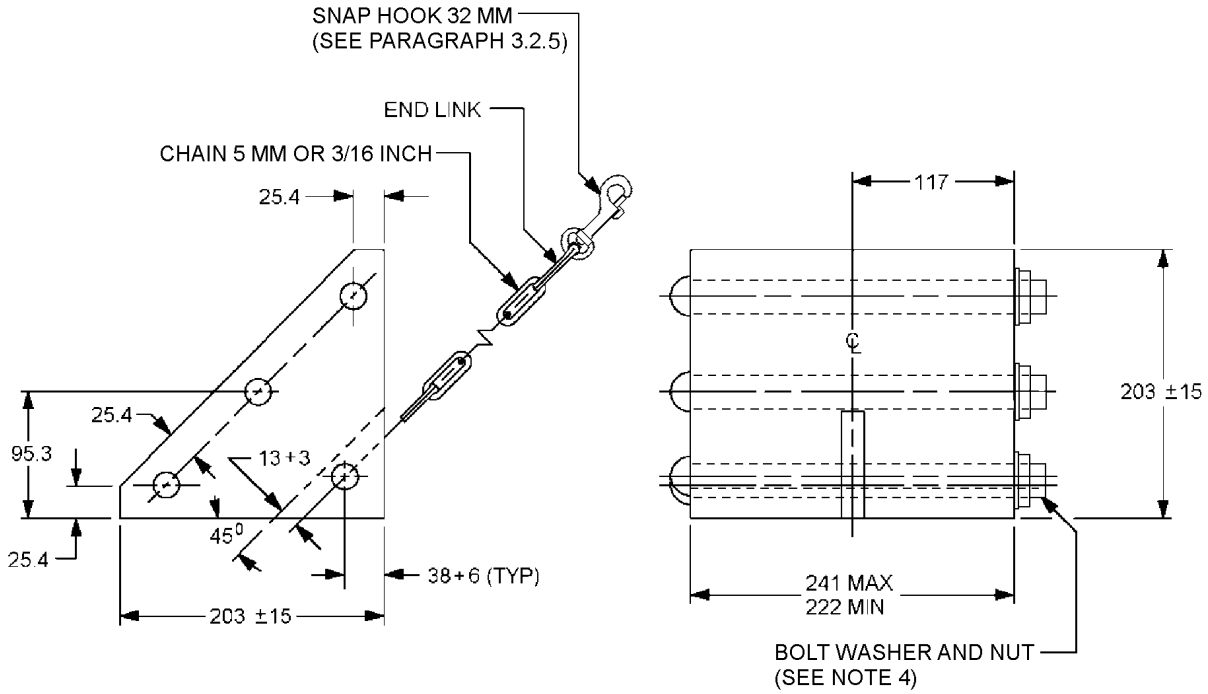

TYPE I

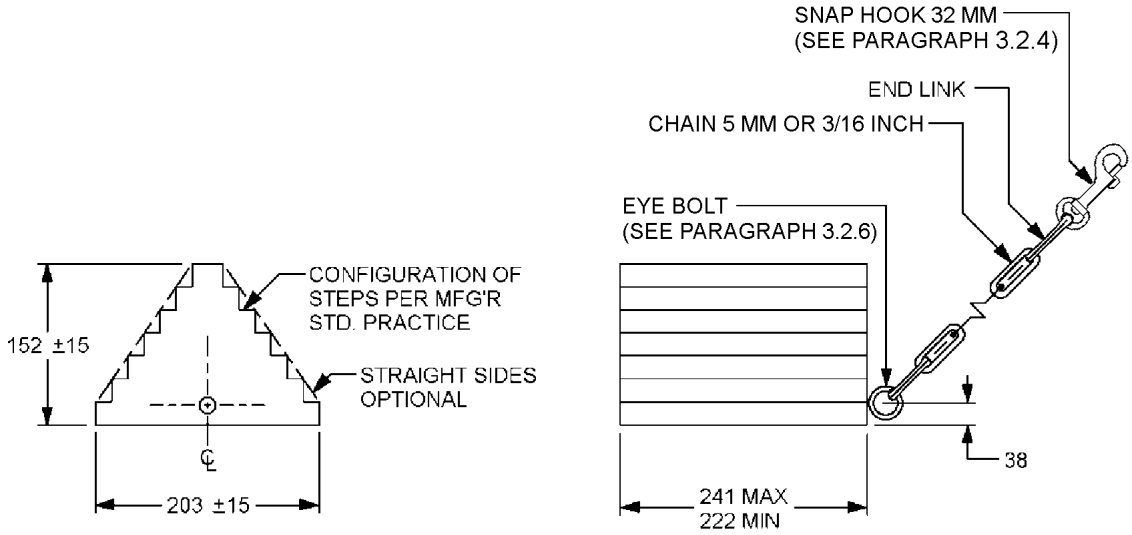

TYPE II

FIGURE 1. Chock, wheel dimensions and configuration.

Downloaded from http://www.everyspec.com

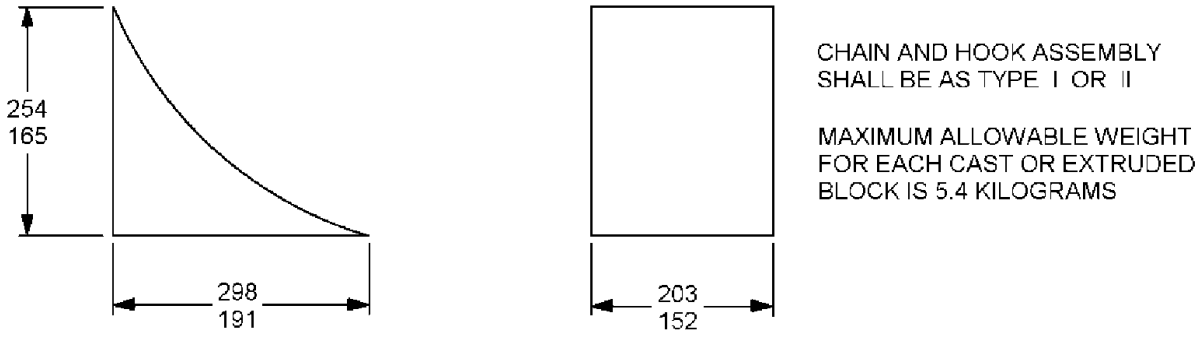

TYPE III

NOTES:
1. Chock block shall be furnished as a complete painted assembly (with chain attached, etc.).
2. Radius or chamfer all outer edges.
3. Unless otherwise specified, dimensions are in millimeters. Tolerances are ± 6 mm.
4. Bolt 8mm or .3125 18UNC-2A, cut off excess length of bolt and peen over, 4 each required.

FIGURE 1. Chock, wheel dimensions and configuration - Continued.

7.8 National stock number (NSN). The following is a list of NSN's assigned which correspond to this CID. The list is for information only and may not be indicative of all possible NSN's associated with the CID. For up to date information on assigned NSN's, please contact the aforementioned DLA Land and Maritime office (See 7.8).

TABLE IV. NSN's.

Dash number (see table I) AA52475-	NSN
001	2540-00-678-3469
002	2540-01-500-6119

7.9 Cross reference and superseding listing. The following table V is a cross reference and superseding listing for wheel chock assembly.

TABLE V. Cross reference and superseding listing.

Cross reference			Superseding
Wheel chock type	PIN number	Former MS PIN	MS52127
Type I	AA52475-1	MS52127-3	-1, -2, and -4
Type II	AA52475-2	None	None
Type III	AA52475-3	None	None

Downloaded from http://www.everyspec.com

7.10 Legacy. This commercial item description is a replacement for MS52127 for all federal agencies MS52127 is canceled as of 6 October 1993 and copies of these documents are available online at http://quicksearch.dla.mil or from the DLA Document Services Order Desk, 700 Robbins Avenue, Building 4D, Philadelphia, PA 19111-5094).

7.11 Replacement parts. The following table VI is a list of inch-pound replacement parts for the wheel chock assembly. NASM parts may be supplied with either zinc or cadmium plating under the same PIN. MS parts listed are cadmium plated.

TABLE VI. Replacement parts.

Name of part	Replacement PIN	Document
Carriage bolt	MS35751-65	NASM35751
Flat washer	MS27183-13	MS27183
Nut	MS51967-5	MS51967
Snap hook	M43770/6MIZE1	NASM43770/6

7.12 Key words.

Camouflage
Non-ferrous metal
Rubber
Spark-proof
Wood

7.13 Changes from previous issue. Marginal notations are not used in this revision to identify changes with respect to the previous issue due to the extensiveness of the changes.

MILITARY INTERESTS

Custodians:
Army - AT
Navy - SH
Air Force - 99
DLA - CC

Review activities:
Army - AR
Navy - MC, SA,YD
Air Force - 71

CIVIL AGENCY COORDINATING ACTIVITY:

GSA - FAS

Preparing activity:
DLA - CC

Project 2540-2014-004

NOTE: The activities listed above were interested in this document as of the date of this document. Since organizations and responsibilities can change, you should verify the currency of the information above using the ASSIST Online database at https://assist.dla.mil.