Downloaded from http://www.everyspec.com

INCH-POUND

A-A-52420
13 January 1993

COMMERCIAL ITEM DESCRIPTION

PLUG, EXPANSION

The General Services Administration has authorized the use of this commercial item description (CID) as a replacement for MIL-P-20691C and MS35648A, which are canceled.

1.0 Abstract. This commercial item description (CID) covers the requirements of a curved, circular steel disc expansion plug used for closing holes in castings and other similar openings. The expansion plug is referred to herein as "plug".

2.0 Salient characteristics.

2.1 Materials. Plugs shall be of low or medium low carbon steel, Unified Numbering System (UNS) G10080 to G10220, inclusive. Protective coating is not required. The use of recovered material made in compliance with regulatory requirements is acceptable providing that all requirements of this CID are met (see 5.6).

2.2 Design and construction. Plugs shall meet the design requirements of Figure 1.

2.3 Hardness. Plug hardness shall be HRB 50 to 80 when tested in accordance with American Society for Testing and Materials (ASTM) E18.

2.4 Identification and marking. Identification and marking of plugs shall be permanent and legible and shall include as a minimum the CID part number and the manufacturer's identification code (CAGE).

Beneficial comments, recommendations, additions, deletions clarifications, etc. and any other data which may improve this document should be sent by letter to: U.S. Army Tank-Automotive Command, ATTN: AMSTA-GDS, Warren, MI 48397-5000.

AMSC N/A FSC 5340

DISTRIBUTION STATEMENT A. Approved for public release; distribution is unlimited.

Downloaded from http://www.everyspec.com

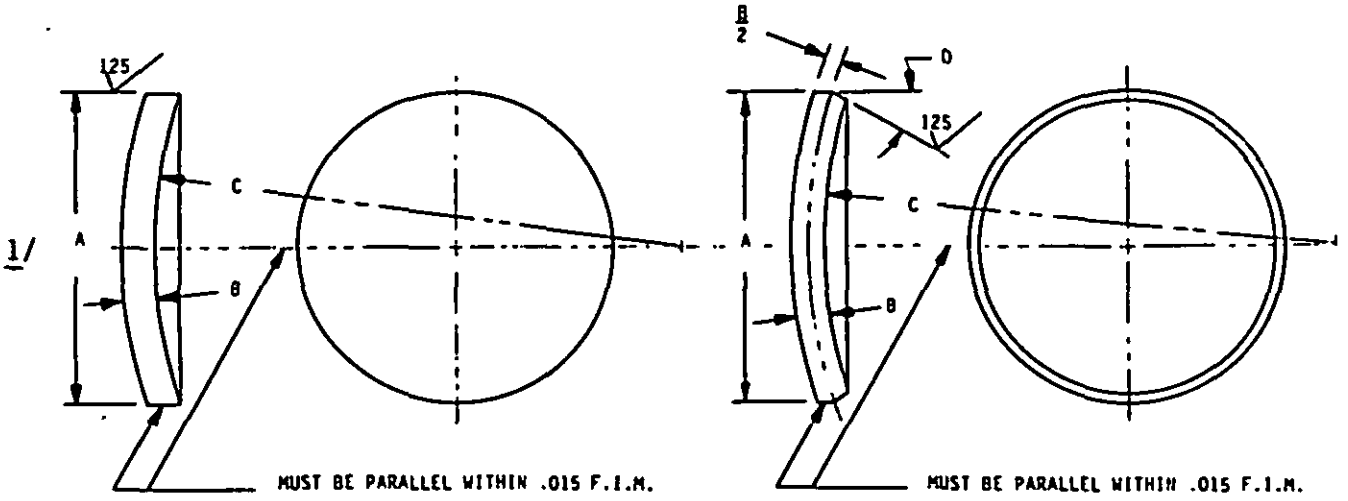

NOTES:

1/ RECOMMENDED DIAMETER FOR PROPER PLUG INSTALLATION SHALL BE MAXIMUM PLUG OUTSIDE DIAMETER PLUS .002.

2. DIMENSIONS ARE IN INCHES.

CID PIN	SUPERSEDED MS PIN	NOMINAL DIAMETER	OUTSIDE DIAMETER 'A'		THICKNESS 'B'	RADIUS 'C'	ANGLE 'D'
			MAX 1/	MIN	± .005	± 1/64	± 1°
A52420-01	35648-01	1/4	.252	.248	.032	7/32	32
A52420-02	35648-02	3/8	.377	.372	.065	13/32	25
A52420-03	35648-03	1/2	.502	.498	.065	17/32	25
A52420-04	35648-04	5/8	.628	.622	.065	3/4	23
A52420-05	35648-05	3/4	.753	.747	.065	15/16	23
A52420-06	35648-06	7/8	.878	.872	.083	1 3/32	23
A52420-07	35648-07	1	1.003	.997	.083	1 1/8	24
A52420-08	35648-08	1 1/8	1.128	1.122	.083	1 3/8	24
A52420-09	35648-09	1 1/4	1.253	1.247	.083	1 5/8	21
A52420-10	35648-10	1 3/8	1.380	1.370	.083	1 13/16	21
A52420-11	35648-11	1 1/2	1.505	1.495	.083	2 1/8	21
A52420-12	35648-12	1 5/8	1.630	1.620	.083	2 3/8	21
A52420-13	35648-13	1 3/4	1.755	1.745	.083	2 11/16	19
A52420-14	35648-14	1 7/8	1.880	1.870	.083	2 7/8	19
A52420-15	35648-15	2	2.005	1.995	.083	3 3/16	19
A52420-16	35648-16	2 1/4	2.255	2.245	.083	3 9/16	19
A52420-17	35648-17	2 1/2	2.505	2.495	.083	4 5/32	17
A52420-18	35648-18	2 3/4	2.755	2.745	.083	4 1/2	17
A52420-19	35648-19	3	3.005	2.995	.083	5	17
A52420-20	35648-20	3 1/4	3.255	3.245	.134	5 1/2	17
A52420-21	35648-21	3 1/2	3.505	3.495	.134	6	17

FIGURE 1. Design requirements.

Downloaded from http://www.everyspec.com

2.5 Workmanship. Plug shall be free of dirt, oil, or other foreign material, except as required for preservation (see 4.0). Workmanship shall be of a quality which shall assure a product free of burrs, rust, loose scale, splits, cracks, or other defects which affect serviceability. Plugs shall have a clean, sharp edge on the concave side.

3.0 Quality assurance provisions.

3.1 Responsibility for inspection. The contractor is responsible for all inspections (examinations and tests) to assure the plug meets all salient characteristics specified herein.

3.2 Contractor certification. The contractor shall certify and maintain substantiating evidence that the product offered meets the salient characteristics of this CID and that the product conforms to the producer's own drawings, specifications, standards, and quality assurance practices. Items with known defects shall not be submitted for Government acceptance. The Government reserves the right to require proof of such conformance prior to the first delivery and thereafter as may be otherwise provided for under the provisions of the contract.

4.0 Preservation, packaging, packing, labeling, and marking. Preservation, packaging, packing, labeling, and marking for the desired level shall be in accordance with ASTM D3951.

5.0 Notes.

(This section contains information of a general or explanatory nature that may be helpful, but is not mandatory.)

5.1 Addresses for obtaining copies of referenced Non-Government publications. Copies of ASTM E18 "Rockwell Hardness and Rockwell Superficial Hardness of Metallic Materials, Test Method for", and ASTM D3951 "Standard Practice for Commercial Packaging" are available from American Society for Testing and Materials, 1916 Race Street, Philadelphia, PA 19103.

5.2 Ordering data. Acquisition documents must specify the following:

a. Title, number, and date of this CID.
b. Issue of Department of Defense Index of Specifications and Standards (DODISS) to be cited in the solicitation, and if required, the specific issue of individual documents referenced (see 5.1).
c. Plug PIN (see 5.3 and figure 1).

5.3 Part or identification number (PIN). The PIN to be used for plugs acquired by this CID are created as follows:

A 52420 - XX

- XX — Dash number (see Figure 1).
- 52420 — CID number.
- A — Commercial item designator.

5.4 Cross reference. Plugs conforming to this CID are interchangeable/substitutable with plugs conforming to MS35648A (see figure 1).

Downloaded from http://www.everyspec.com

5.5 Metric product. Products manufactured to metric dimensions will be considered on an equal basis with those manufactured using inch-pound units, provided they fall within specified tolerances using conversion tables contained in the latest revision of ASTM E380, and all other requirements of this CID are met. If a product is manufactured to metric dimensions and those dimensions exceed the tolerances specified in the inch/pound units, a request should be made to the contracting officer to determine if the product is acceptable. The contracting officer has the option of accepting or rejecting the product.

5.6 Regulatory requirements. The offeror/contractor is encouraged to use recovered materials in accordance with Public Law 94-580 to the maximum extent practical.

Custodians:
Army - AT
Navy - AS
Air Force - 99

Review activities:
DLA - IS
Air Force - 82

User activities:
Army - AV, ME, AR
Navy - MC

Preparing activity:
Army - AT

(Project 5340-2100)