Downloaded from http://www.everyspec.com

INCH-POUND

A-A-52401
July 10 1992

COMMERCIAL ITEM DESCRIPTION

BEARING, SLEEVE (STEEL-BACKED)

The General Services Administration has authorized the use of this commercial item description as a replacement for MIL-B-13506C, which is canceled.

1. Abstract. This commercial item description (CID) covers requirements for sleeve bearings constructed of low-friction metal bonded to a steel back. The sleeve bearings are used to support rotating shafts or journals and come in several types and styles (see 2.2). Not covered by this CID are sleeve bearings for marine, diesel, and aircraft engine applications.

2. Salient characteristics.

2.1 Materials. Unless otherwise specified in the applicable drawings sleeve bearings shall be manufactured of material as specified herein. The use of recovered material made in compliance with regulatory requirements is acceptable providing that all requirements of this CID are met (see 5.4).

2.1.1 Backs. The sleeve bearing backs shall be made of steel conforming to ASTM A109.

2.1.2 Liners. The sleeve bearing liners shall be manufactured from oil impregnated, sintered metal powder conforming to ASTM B328 or from SAE J460 bearing alloys listed below:

Bearing alloy	Chemical compositions number
Tin base	12
Lead base (babbits)	13, 14, 15
Lead tin-overlay	19, 190
Copper lead	48, 480, 49
Aluminum	770
Copper base	792 or 797, 793 or 798, 794 or 799

2.1.3 Overlay. When required, the overlay material shall be a lead-tin alloy conforming to SAE J460, composition number 19 or 190. The overlay shall be applied to the bearing surface of the liner and shall have a nominal thickness of 0.001 inch or less.

Beneficial comments, recommendations, additions, deletions clarifications, etc. and any other data which may improve this document should be sent by letter to: U.S. Army Tank-Automotive Command, ATTN: AMSTA-GDS, Warren, MI 48397-5000.

AMSC N/A FSC 3120

DISTRIBUTION STATEMENT A. Approved for public release; distribution is unlimited.

Source: https://assist.dla.mil -- Downloaded: 2016-03-28T17:18Z
Check the source to verify that this is the current version before use.

Downloaded from http://www.everyspec.com

2.2 Design and construction. The sleeve bearing shall be designed and constructed in accordance with the applicable drawing (see 5.2) and shall conform to a type and style as shown in figures 1 and 2. When specified (see 5.2), the sleeve bearing bores shall be furnished undersized to permit finish machining at assembly.

2.3 Performance.

2.3.1 Bonding. Backs and liners shall be bonded by either a chemical or metallurgical bond. A 180° section of the bearing shall be used for the adhesion test. The bearing liner shall be scored the depth of the liner metal to leave 1/4-inch lands parallel to the axis of the bore. The liner metal shall be separated from the back by chiseling at the bond line at right angle to the lands. Separation of any one of the lands as a unit or any flaking of the liner from the steel back shall be cause for rejection.

2.4 Identification and marking. Unless otherwise specified in the drawing, identification and marking shall be permanent and legible in accordance with MIL-STD-130. The following information shall be included, as minimum:

(1) Manufacturer Identification Code (CAGE).
(2) Contract number.
(3) Part number (IAW sleeve bearing drawing).

2.5 Workmanship. Workmanship shall be in accordance with the manufacture of a high quality bearing. This shall be evidenced by the absence of defects detrimental to its life, serviceability, and appearance.

3. Quality assurance provisions.

3.1 Responsibility for inspection. The contractor is responsible for the performance of all inspections (examinations and tests).

3.2 Contractor certification. The contractor shall certify and maintain substantiating evidence that the product offered meets the salient characteristics of this commercial item description and that the product conforms to the contrator's own drawings, specifications, standards, and quality assurance practices. Items with known defects shall not be submitted for Government acceptance. The Government reserves the right to require proof of such conformance prior to the first delivery and thereafter as may be otherwise provided for under the provisions of the contract.

4. Preservation, packaging, packing, labeling, and marking. Preservation, packaging, packing, labeling, and marking for the desired level shall be as specified in the contract (see 5.2).

5. Notes.

5.1 Address for obtaining copies of referenced documents.

5.1.1 Government specifications and standards. Copies of federal and military specifications and standards are available from the Navy Publications and Printing Service Office, Standardization Documents Order Desk, Bldg. 4D, 700 Robbins Avenue, Philadelphia, PA 19111-5094.

Source: https://assist.dla.mil -- Downloaded: 2016-03-28T17:18Z
Check the source to verify that this is the current version before use.

Downloaded from http://www.everyspec.com

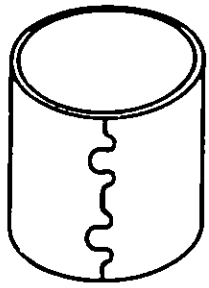

Type I - Plain full cylinder bearing with either a seam-weld, butt joint, or clinch point.

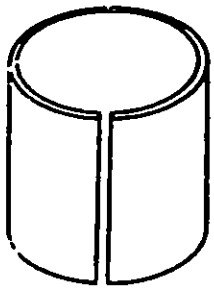

Type II - One piece split bearing with longitudinal split along full length.

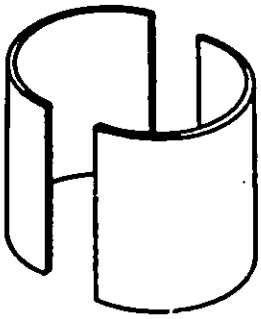

Type III - Split bearing with two 180° mating parts.

FIGURE 1. Bearing types.

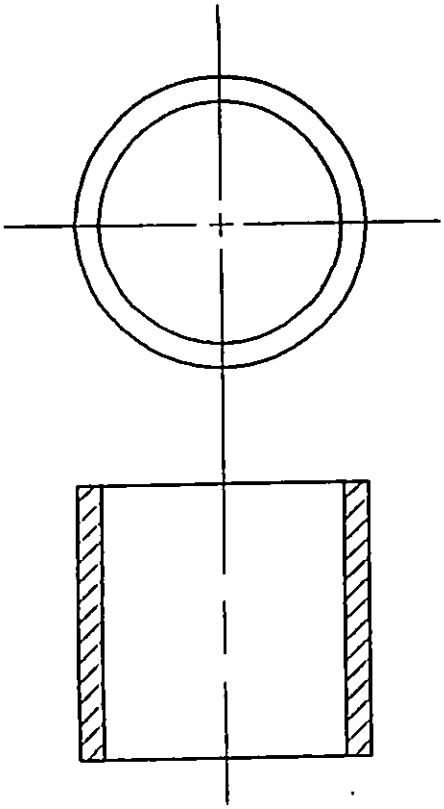

Style A - Straight-wall bearing.

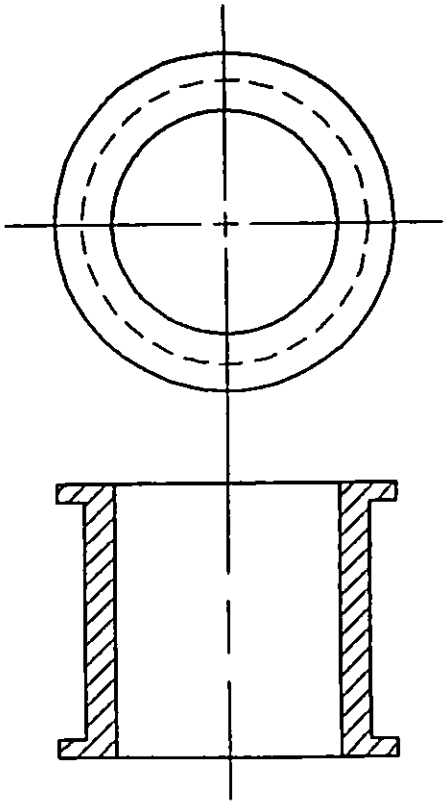

Style B - Flanged bearing.

FIGURE 2. Bearing styles.

Source: https://assist.dla.mil -- Downloaded: 2016-03-28T17:18Z
Check the source to verify that this is the current version before use.

Downloaded from http://www.everyspec.com

5.1.2 Non-Government publications. ASTM A109 "Standard Specification for Steel, Strip, Carbon, Cold-Rolled" and ASTM B328 "Standard Test Method for Density and Interconnected Porosity of Sintered Powder Metal Structural Parts and Oil-Impregnated Bearings" are available from the American Society for Testing and Materials, 1916 Race Street, Philadelphia, PA 19103. SAE J460 "Bearings and Bushing Alloys" and SAE J506 "Sleeve Type Half Bearings" are available from the Society of Automotive Engineers Inc., 400 Commonwealth Drive, Warrendale, PA 15096.

5.2 Ordering data. Acquisition documents must specify the following:

a. Title, number and date of this commercial item description.
b. Type, style, and part number of sleeve bearing (see 2.2 and 2.4).
c. Sleeve bearing drawing number, revision letter, and date (see 2.2).
d. Undersize bore dimensions (see 2.2).
e. Issue of the DODISS and industry standards to be cited in the solicitation.
f. Selection of applicable level and packaging requirements (see 4).

5.3 Supersession and cross-reference data. Sleeve bearings conforming to this CID are interchangeable/substitutable with sleeve bearings conforming to MIL-B-13506.

5.4 Regulatory requirements. The offeror/contractor is encouraged to use recovered materials in accordance with Public Law 94-580 to the maximum extent practicable.

5.5 Metric product. Sleeve bearings that are to metric dimensions will be considered on the following basis:

a. Products manufactured to metric dimensions will be considered on an equal basis with those manufactured using inch-pound units, provided they fall within specified tolerances using conversion tables contained in the latest revision of Federal Standard No. 376, and all other requirements of this CID are met.

b. If a product is manufactured to metric dimensions and those dimensions exceed the tolerances specified in the inch-pound units, a request should be made to the contracting officer to determine if the product is acceptable.

c. The contracting officer has the option of accepting or rejecting the product.

Custodians:
Army - AT
Navy - OS
Air Force - 99

Review activities:
Navy - MC, SH
Air Force - 84
DLA - IS

User activity:
Army - MI

Preparing activity:
Army - AT

(Project 3120-0720-01)

Source: https://assist.dla.mil -- Downloaded: 2016-03-28T17:18Z
Check the source to verify that this is the current version before use.

Downloaded from http://www.everyspec.com

STANDARDIZATION DOCUMENT IMPROVEMENT PROPOSAL

INSTRUCTIONS

1. The preparing activity must complete blocks 1, 2, 3, and 8. In block 1, both the document number and revision letter should be given.
2. The submitter of this form must complete blocks 4, 5, 6, and 7.
3. The preparing activity must provide a reply within 30 days from receipt of the form.

NOTE: This form may not be used to request copies of documents, nor to request waivers, or clarification of requirements on current contracts. Comments submitted on this form do not constitute or imply authorization to waive any portion of the referenced document(s) or to amend contractual requirements.

I RECOMMEND A CHANGE:	1. DOCUMENT NUMBER	2. DOCUMENT DATE (YYMMDD)
	A-A-52401	92/07/10

3. DOCUMENT TITLE
Bearing, Sleeve (Steel Backed)

4. NATURE OF CHANGE *(Identify paragraph number and include proposed rewrite, if possible. Attach extra sheets as needed.)*

5. REASON FOR RECOMMENDATION

6. SUBMITTER

a. NAME (Last, First, Middle Initial)	b. ORGANIZATION	
c. ADDRESS (Include Zip Code)	d. TELEPHONE (Include Area Code) (1) Commercial (2) AUTOVON (If applicable)	7. DATE SUBMITTED (YYMMDD)

8. PREPARING ACTIVITY

a. NAME	b. TELEPHONE (Include Area Code) (1) Commercial (313) 574-5413	(2) AUTOVON 786-5413
c. ADDRESS (Include Zip Code) COMMANDER U.S. ARMY TANK - AUTOMOTIVE COMMAND ATTN: AMSTA-GDS WARREN, MICHIGAN 48397-5000	IF YOU DO NOT RECEIVE A REPLY WITHIN 45 DAYS, CONTACT: Defense Quality and Standardization Office 5203 Leesburg Pike, Suite 1403, Falls Church, VA 22041-3466 Telephone (703) 756-2340 AUTOVON 289-2340	

Source: https://assist.dla.mil -- Downloaded: 2016-03-28T17:18Z
Check the source to verify that this is the current version before use.