Downloaded from http://www.everyspec.com

INCH-POUND

A-A-52301
April 3, 1992

COMMERCIAL ITEM DESCRIPTION

DRAWING BOARD AND DRAWING BOARD TRESTLES

The General Services Administration has authorized the use of this commercial item description in preference to Federal specification GG-D-635D and military standards MS39115C, MS39116C, MS39117C, MS39118D, MS39123C, and MS39124.

This description covers drawing boards and drawing board trestles of various sizes, to be used for drafting, layout or military projection applications.

Salient characteristics.

Design: The drawing boards with or without applicable trestles shall be as follows and as described herein:

Type I, type II, and type III desk boards shall conform to figure 1.
Type II, type III, and type IV trestle boards shall conform to figure 2.
Trestles shall be in accordance with figure 3, figure 4, figure 5, or figure 6 and as described herein.

Classification.

Type I - Wood drawing boards with wood end cleats.

Size: a - 12 by 17 inches (figure 1-1)
b - 16 by 21 inches (figure 1-2)
c - 20 by 26 inches (figure 1-3)
d - 23 by 31 inches (figure 1-4)
e - 31 by 42 inches (figure 1-5)

Beneficial comments, recommendations, additions, deletions, clarifications, etc. and other data which may improve this document should be sent by letter to: Commander, U.S. Army Belvoir Research, Development and Engineering Center, ATTN: STRBE-TSE, Fort Belvoir, VA 22060-5606.

AMSC N/A FSC 6675

DISTRIBUTION STATEMENT A. Approved for public release; distribution is unlimited.

Downloaded from http://www.everyspec.com

Type II - Wood drawing boards with metal end cleats.

Size: a - 12 by 17 inches (figure 1-1)
b - 16 by 21 inches (figure 1-2)
c - 20 by 26 inches (figure 1-3)
d - 23 by 31 inches (figure 1-4)
e - 31 by 42 inches (figure 1-5)
f - 23 by 31 inches (figure 2-1)
g - 31 by 42 inches (figure 2-2)
h - 38 by 48 inches (figure 2-3)
i - 43.5 by 60 inches (figure 2-4)
j - 43.5 by 72 inches (figure 2-5)
k - 43.5 by 84 inches (figure 2-6)

Type III - Composition core drawing boards, with wood or metal banding on all edges.

Size: a - 12 by 17 inches (figure 1-1)
b - 16 by 21 inches (figure 1-2)
c - 20 by 26 inches (figure 1-3)
d - 23 by 31 inches (figure 1-4)
e - 31 by 42 inches (figure 1-5)
f - 23 by 31 inches (figure 2-1)
g - 31 by 42 inches (figure 2-2)
h - 38 by 48 inches (figure 2-3)
i - 43.5 by 60 inches (figure 2-4)
j - 43.5 by 72 inches (figure 2-5)
k - 43.5 by 84 inches (figure 2-6)

Type IV - Particleboard core laminated with clear wood veneer top and bottom, with three battens and metal end cleats.

Size: a - 60 by 120 inches (figure 2-7)

Type IV (optional) - Composition core drawing boards, with plastic laminated surfaces and metal end cleats.

Size: b - 60 by 108 inches (figure 2-7 (optional))

(Note: Sizes may vary up to ±1 inch.

Trestles for drawing boards.

Style: A - for 23 x 31 inch drawing boards (figure 3).
B - for 31 x 42 inch drawing boards (figure 4).
C - for 38 x 48 inch drawing boards (figure 5).
D - for 38 x 48, 43 1/2 x 60-72-84, 60 x 108-120 (figure 6).
X - none required.

Downloaded from http://www.everyspec.com

Materials:

Wood drawing boards. Wood shall be seasoned or kiln dried to assure dimensional stability and permanent configuration. Cross grain (slope of grain) whether on the face or edges of a piece shall be not more than 1 inch in a length of 10 inches. Wood shall be free from decay, splits, checks, shakes, bark, pitch pockets, holes, and knots. Plywood or veneer shall be free of blemishes that would impair the working surfaces of the boards.

Composition core drawing boards. The composition core board shall be plastic-filled with the core having a density of not less than 30 pounds per cubic foot and a urea formaldehyde resin content of not less than 7 percent, or a commercially proven equivalent. Working surfaces shall be not less than .0625-inch thick. Multiple plys of wood used for strength shall be laminated in cross-grain patterns of continuous wood, and sanded smooth on each side.

Edge banding. Edge banding of core boards shall be basswood, pecan, maple, oak, birch, white pine or ponderosa pine, and shall be applied to all exposed edges. Metal channel molding mounted flush with the working surfaces for parallel end guides and cross sectional support shall be acceptable. When mounting strips are laminated into core boards, strip areas shall be plainly marked on the edges of the board.

Steel. Wood screws, bolts, washers, and hardware moldings, chains etc., shall be of commercial grade corrosion-resisting steel or shall be made corrosion-resistant by commercial standards.

Wood trestles: Wood used in trestles shall be seasoned or kiln dried to ensure lamination integrity and dimensional stability. Wood shall be oak, maple, or dense hardwood variety with cross graining not more than 1 inch in 20 linear inches, and free of decay, splits, checks, shakes, bark, pitch pockets, holes, and knots. Trestles shall be unassembled. Trestle components shall be placed in a cushioned box to prevent movement and damage of the trestle components.

Construction. Wood boards shall be made from the same species of wood for the entire working surface of one drawing board. The working surface shall be composed of continuous wood lengths, 1.75 to 5 inches each uniform in width, extending the entire length of the working surface with grain running full length whenever practical. The laminated body of the board shall be made up of full length pieces bonded together with waterproof resin adhesive. Bonded joints, fully set, shall have a strength greater than the wood being bonded. Drawing boards more than 45 inches in width and 85 inches in length made from laminates of wood, uniform in length, shall be reinforced across the grain with three battens not less than 1.0625 inch x 2 inches in cross sectional dimensions, standing perpendicular to the board and secured with

Downloaded from http://www.everyspec.com

thermosetting waterproof resin adhesive and with recessed steel fasteners at intervals of not less than 1 foot. The exposed grain ends of these boards shall be banded.

Finish. All fabricated wood and plastic surfaces shall be sanded smooth and shall be free of cracks, splits, and splintered edges.

Protective finishing. The drawing boards shall be protected at a minimum with one coat, and the trestle wood surface with two coats of regular bleached white 4.5 lb. cut shellac.

Workmanship. Drawing boards and trestles shall be free from defects and imperfections which might affect their serviceability.

Certification of commercial item. The contractor shall certify that the product offered to the Government meets the salient characteristics of this description and that the product conforms to the producer's own drawings, specifications, standards, and quality assurance practices and is the same product as the manufacturer's current product offered by the contractor in the commercial marketplace for at least one year preceding the solicitation. The Government reserves the right to require proof of such conformance prior to first delivery and thereafter as may be otherwise provided for under the provisions of the contract.

Metric Products. Products manufactured to metric dimensions will be considered on an equal basis with those manufactured using inch-pound units, provided they fall within the tolerances specified using conversion tables contained in the latest revision of FED-STD-376, and all other requirements of this commercial item description are met.

If a product is manufactured to metric dimensions and those dimensions exceed the tolerances specified in the inch/pound units, a request should be made to the contracting officer to determine if the product is acceptable.

The contracting officer has the option of accepting or rejecting the product.

Quality assurance: The drawing board and drawing board trestles shall be examined for the following defects. Presence of one or more defects shall be cause for rejection.

1. Design not as specified.
2. Type not as specified.
3. Size not as specified.
4. Material not as specified.
5. Construction not as specified.
6. Finish not as specified.
7. Protective finish not as specified.
8. Workmanship not as specified.
9. Packaging, marking not as specified.

Downloaded from http://www.everyspec.com

Regulatory requirements. In accordance with section 23.403 of the Federal Acquisition Regulations, the Government's policy is to acquire items composed of the highest percentage of recovered materials practicable, consistent with maintaining a satisfactory level of competition without adversely affecting performance requirements or exposing the supplier's employees to undue hazards from the recovered materials.

Preservation, packaging, packing, labeling, and marking. The preservation, packaging, packing, labeling, and marking shall be as specified in the contract or order.

CID based part identification numbers. The following part identification numbering procedure is for Government purposes and does not constitute a requirement for the contractor.

Part or identifying number (PIN). The part or identifying number for drawing boards and drawing board trestles, shall be as follows:

A 52301 - XXX - X - X - X

CID Document identifier

Type (I, II, III, or IV)

Size (a - k)

Figure (1 - 6)

Trestle style (A, B, C, D, or X)

Notes: The procuring agency should specify the preferred options permitted herein and include the following information in procurement documents:

1. Title, number, and date of this item description.
2. Purchaser should specify type, size, figure, and trestle required.
3. When the commercial item description is used for acquisition, the commercial item certification clause must appear in the solicitation.

FED-STD-376 is available from the Standardization Documents Order Desk, Building 4D, 700 Robbins Avenue, Philadelphia, PA 19111-5094.)

The following are suggested sources of supply for this item description (Competition is not limited to these sources).

1. John Woods Survey Equipment Limited, 2380 Midland Avenue, Scarborough, Ontario, Canada M15 1P8.
2. Lutz Superdyne, Inc., 64 70th St., Cutlenberg, NJ 07093.

Downloaded from http://www.everyspec.com

A-A-52301

The preparing activity for this item description is the US Army Belvoir Research, Development, and Engineering Center, ATTN: STRBE-TSE, Fort Belvoir, VA 22060-5606.

MILITARY INTEREST:

Custodians
Army - ME
Air Force - 99

Review activities
Air Force - 82
DLA - GS

User activities
Army - GL
Navy - MC, YD

CIVIL AGENCY COORDINATING ACTIVITIES:

GSA - FSS
OSS

PREPARING ACTIVITY:
Army - ME

Project 6675-0900

Downloaded from http://www.everyspec.com

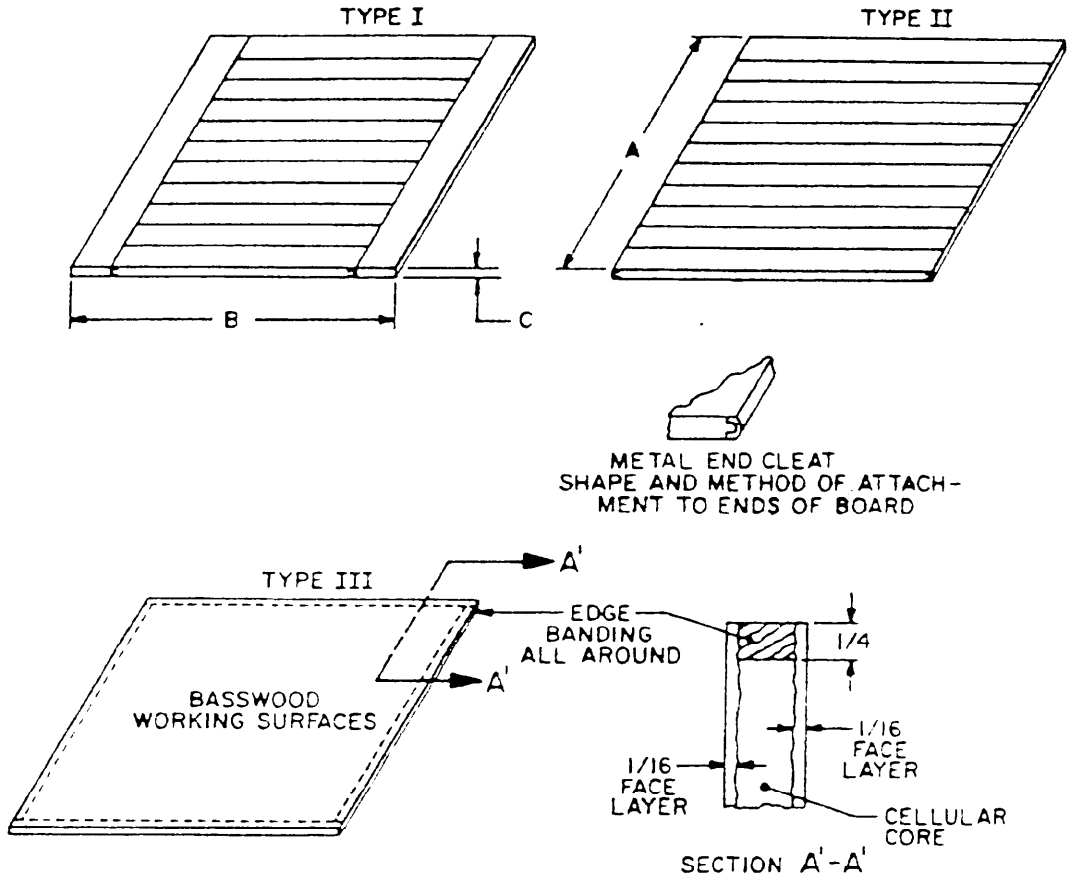

TYPE I-II-III

DASH NO.	A ± 1/4	B ± 1/4	C ± 1/8
-1	12	17	3/4
-2	16	21	3/4
-3	20	26	3/4
-4	23	31	7/8
-5	31	42	7/8

NOTES:

ALL DIMENSIONS ARE IN INCHES. TOLERANCES NOT OTHERWISE SPECIFIED SHALL BE PLUS 1/32 INCH. WORKING SURFACES SHALL BE A TRUE PLANE WITHIN 1/64 INCH FOR 12 INCHES OF LENGTH OR WIDTH, AND SHALL NOT BE CUMULATIVE WITHIN ANY 12-INCH INCREMENT; ANY DEVIATION SHALL BE EVENLY DISTRIBUTED OVER THE ENTIRE INCREMENT. ALL EDGES SHALL BE STRAIGHT WITHIN 1/64 INCH END TO END.

FIGURE 1. Drawing boards — desk type I-II-III.

X-4841A

Downloaded from http://www.everyspec.com

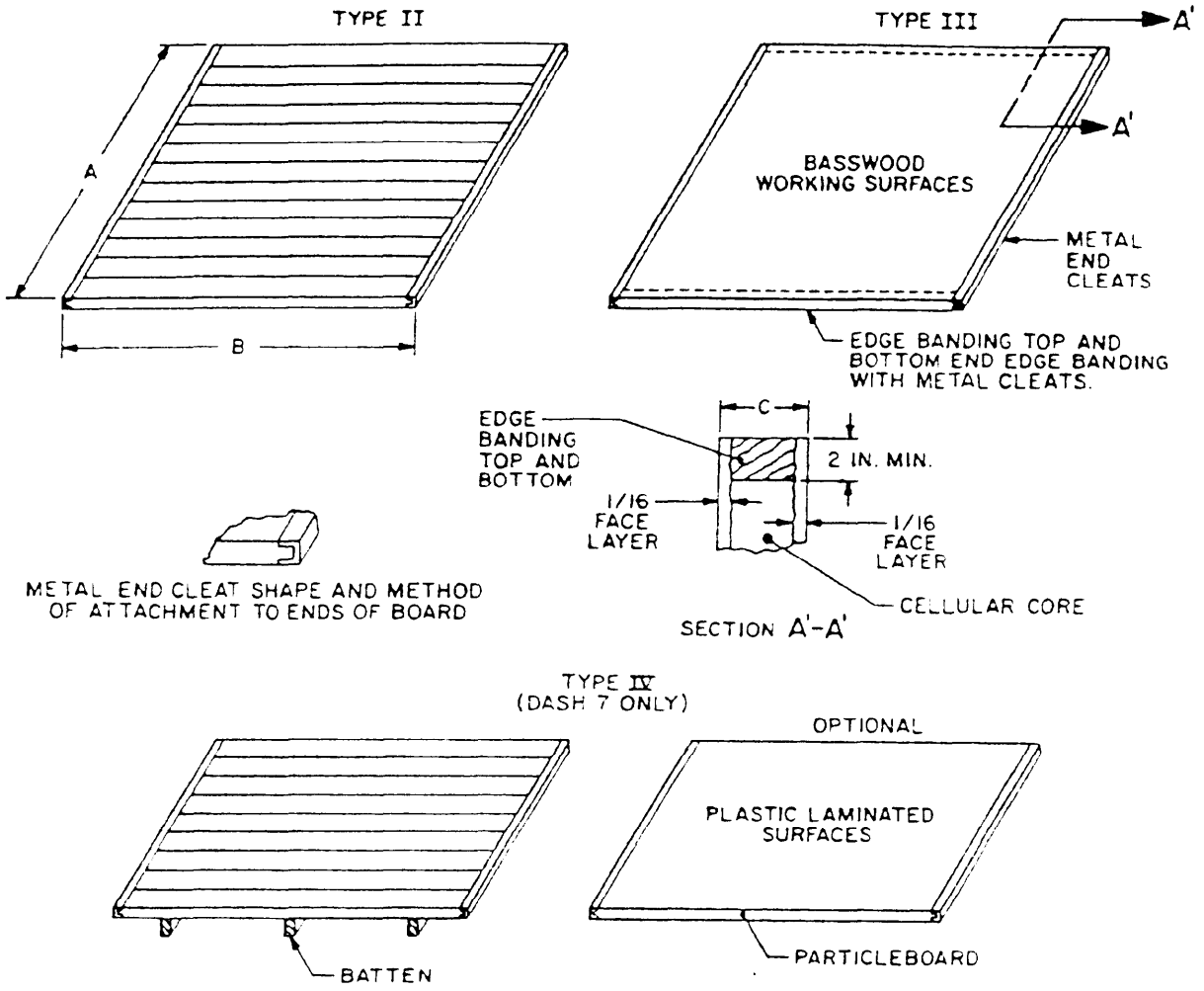

NOTES:

1. ALL DIMENSIONS IN INCHES. TOLERANCES NOT SPECIFIED SHALL BE: PLUS 1/32 INCH FOR DASH 1 THRU 6, PLUS 1/8 INCH FOR DASH 7. WORK SURFACES SHALL BE A TRUE PLACE WITHIN 1/64 INCH (DASH 1 THRU 6), 1/8 INCH (DASH 7), FOR 12-INCHES OF LENGTH OR WIDTH, AND SHALL NOT BE CUMULATIVE WITHIN ANY 12-INCH INCREMENT. ANY DEVIATION SHALL BE EVENLY DISTRIBUTED OVER THE ENTIRE INCREMENT. ALL EDGES SHALL BE STRAIGHT WITHIN 1/64 INCH (DASH 1 THRU 6 AND 1/8 INCH (DASH 7) END TO END. A PERMANENT COVER SHALL BE FURNISHED FOR DASH 7. THE COVER SHALL BE REVERSIBLE, FLEXIBLE, AND WITH A CUSHIONING SURFACE ON BOTH SIDES. THE COVER SHALL BE FASTENED WITH DOUBLE-FACED TAPE.

2. TYPE IV (DASH 7, OPTIONAL). NO BATTENS ARE REQUIRED. THE PLASTIC LAMINATE SHALL COVER ALL WORKING SURFACES AND EDGE BANDINGS. THE PLASTIC LAMINATE SHALL BE THERMAL FUSED TO THE PARTICLEBOARD. A PERMANENT COVER IS REQUIRED.

TYPE II-III-IV

DASH NO.	A ± 1/4	B ± 1/4	C ± 1/8
-1	23	31	7/8
-2	31	42	7/8
-3	38	48	1-1/16
-4	43-1/2	60	1-1/16
-5	43-1/2	72	1-1/16
-6	43-1/2	84	1-1/16
-7	60	120	1-1/16
-7(OPT)	60	108	5/8

FIGURE 2. Drawing boards with trestles type II-III-IV.

X-4942A

Downloaded from http://www.everyspec.com

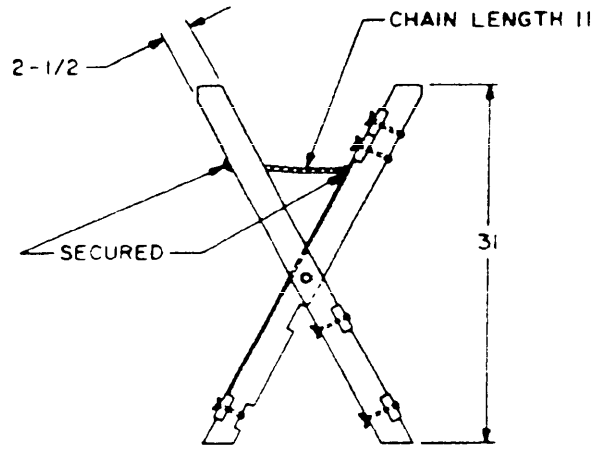

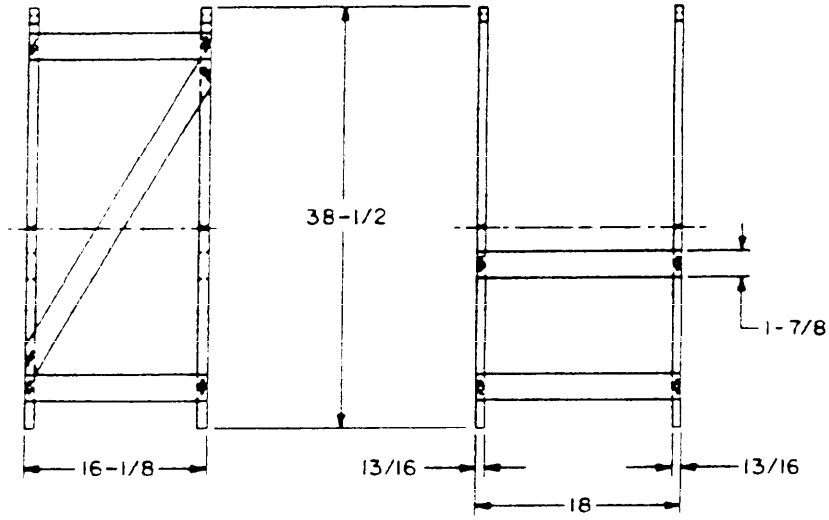

NOTES:

1. ALL DIMENSIONS IN INCHES.
2. ALL DIMENSIONS ARE REFERENCE DIMENSIONS.
3. ALL NUTS ARE WING NUTS.
4. THE BOLTS, WING NUTS, WASHERS, SCREWS, AND CHAIN SHALL BE COMMERCIAL GRADE CORROSION RESISTING STEEL, OR SHALL BE TREATED FOR CORROSION RESISTANCE. THE BOLTS SHALL HAVE A WASHER UNDER EACH HEAD AND EACH WING NUT. SECURE CHAIN WITH SCREW EYES.

FIGURE 3. Trestle, drawing board (23 x 31 inch drawing board).

X-4943

NAME OF ORGANIZATION AND ADDRESS CONTRACT NUMBER

Downloaded from http://www.everyspec.com

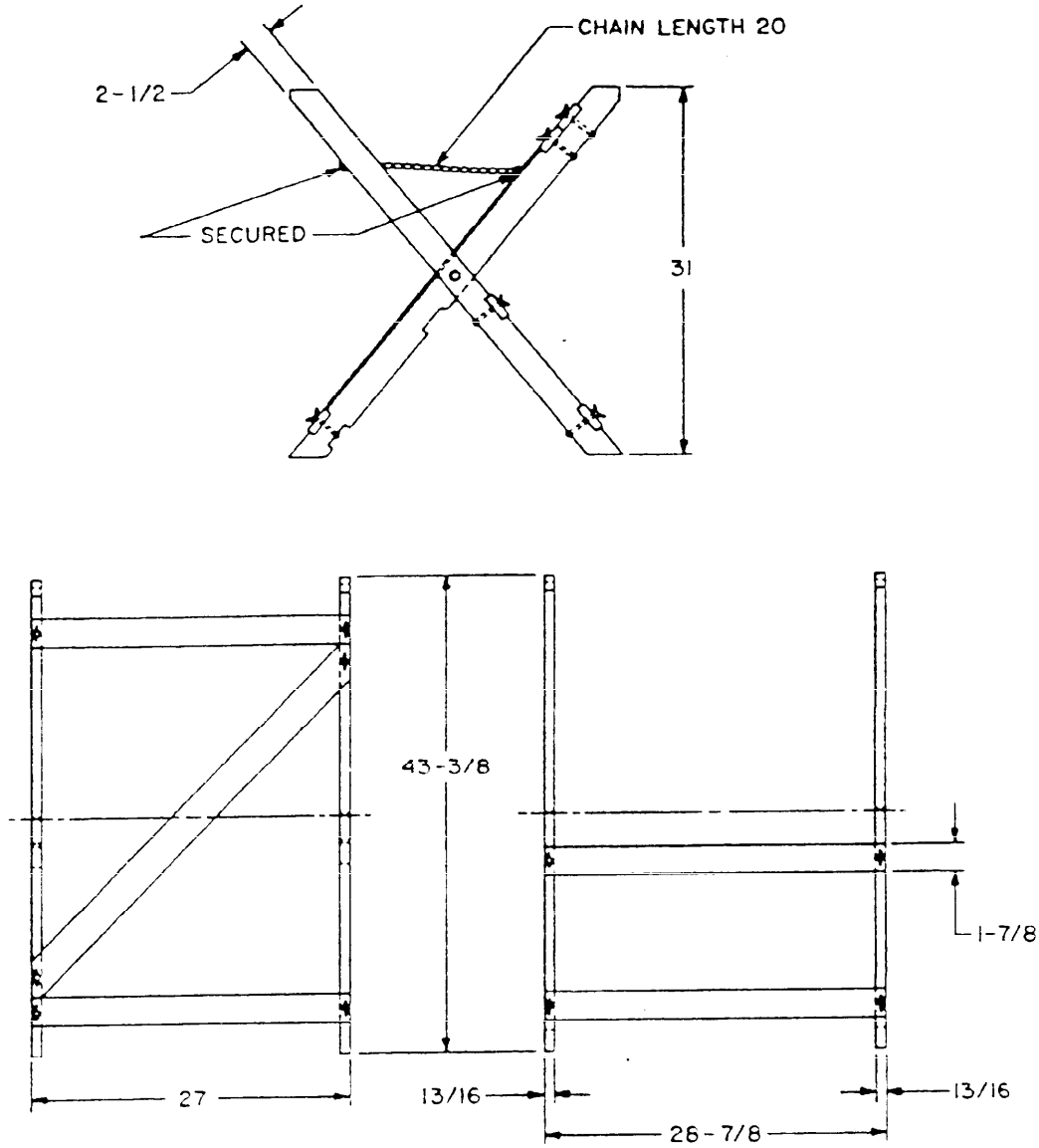

NOTES:

1. ALL DIMENSIONS IN INCHES.
2. ALL DIMENSIONS ARE REFERENCE DIMENSIONS.
3. ALL NUTS ARE WING NUTS.
4. THE BOLTS, WING NUTS, WASHERS, SCREWS, AND CHAIN SHALL BE COMMERCIAL GRADE CORROSION RESISTING STEEL, OR SHALL BE TREATED FOR CORROSION RESISTANCE. THE BOLTS SHALL HAVE A WASHER UNDER EACH HEAD AND EACH WING NUT. SECURE CHAIN WITH SCREW EYES.

FIGURE 4. Trestle, drawing board (31 x 42 inch drawing board).

X-4945A

Downloaded from http://www.everyspec.com

A-A-52301

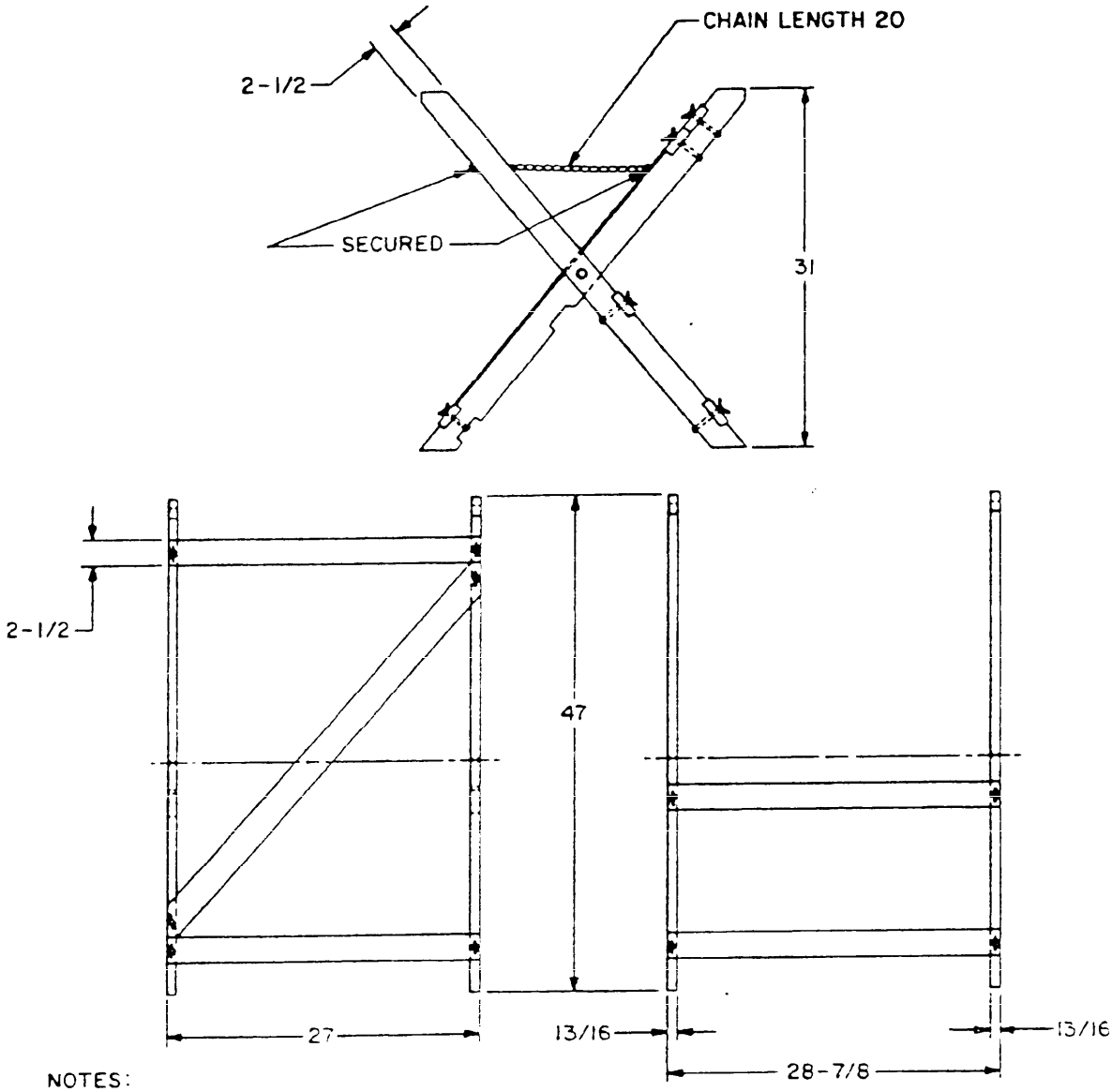

NOTES:

1. ALL DIMENSIONS IN INCHES.
2. ALL DIMENSIONS ARE REFERENCE DIMENSIONS.
3. ALL NUTS ARE WING NUTS.
4. THE BOLTS, WING NUTS, WASHERS, SCREWS, AND CHAIN SHALL BE COMMERCIAL GRADE CORROSION RESISTING STEEL, OR SHALL BE TREATED FOR CORROSION RESISTANCE. THE BOLTS SHALL HAVE A WASHER UNDER EACH HEAD AND EACH WING NUT. SECURE CHAIN WITH SCREW EYES.

FIGURE 5. Trestle, drawing board (38 x 48 inch drawing board).

X-4944A

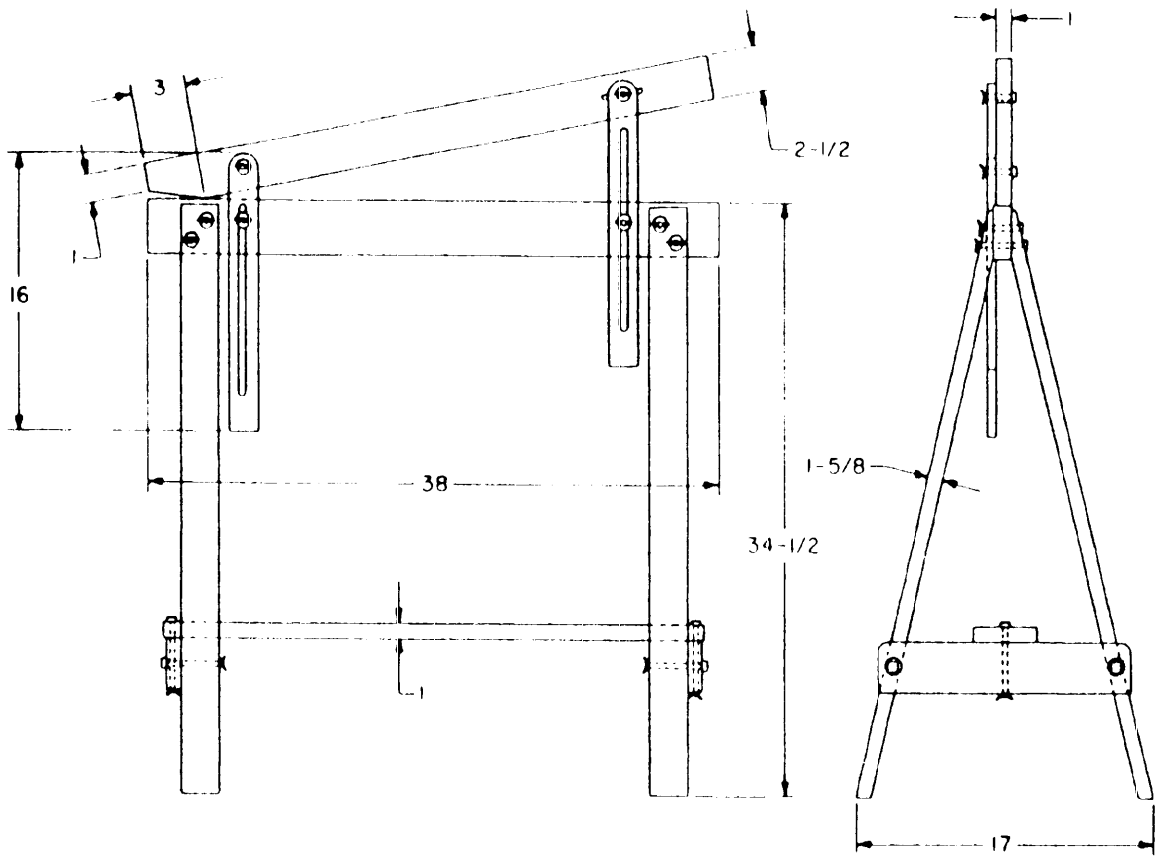

NOTES:

1. ALL DIMENSIONS IN INCHES.
2. ALL DIMENSIONS ARE REFERENCE DIMENSIONS.
3. ALL NUTS ARE WING NUTS.
4. THE BOLTS, WING NUTS, WASHERS, SCREWS, AND CHAIN SHALL BE COMMERCIAL GRADE CORROSION RESISTING STEEL, OR SHALL BE TREATED FOR CORROSION RESISTANCE. THE BOLTS SHALL HAVE A WASHER UNDER EACH HEAD AND EACH WING NUT.

FIGURE 6. Trestle, drawing board (38 x 48, 43-1/2 x 60-72-84, 60 x 120 inch drawing boards).

X-4946

Downloaded from http://www.everyspec.com