Downloaded from http://www.everyspec.com

INCH-POUND
A-A-52190B
April 16, 2009
SUPERSEDING
A-A-52190A
April 28, 2003

COMMERCIAL ITEM DESCRIPTION

DISPENSER, LIQUID, INSULATED

The General Services Administration has authorized the use of this Commercial Item Description as a replacement for Military Specification MIL-D-43916.

1. SCOPE. This commercial item description covers plastic insulated liquid dispensers for transporting hot or cold beverages.

2. CLASSIFICATION/PART OR IDENTIFICATION NUMBER (PIN).

2.1 The liquid dispensers shall be in the following sizes and classes (see 7.2):

Size 1 - 2-1/2 gallon capacity
Size 2 - 5 gallon capacity

Class 1 - Desert Sand (color No. 30279)
Class 2 - Green (color No. 34094 or 34095)

2.2 Part or Identification Number (PIN). The following PIN procedure is for government purposes.

A 52190 -1 -1 (Example of a PIN: A52190-1-1)

- -1 → Class
- -1 → Size
- 52190 → CID number
- A → Designates a Commercial Item Description

Beneficial comments, recommendations, additions, deletions, clarifications, etc. and any other data which may improve this document should be sent to: Defense Supply Center Philadelphia (DSCP), ATTN: DSCP-FTSA, 700 Robbins Avenue, Philadelphia, PA 19111-5092

Downloaded from http://www.everyspec.com

3. SALIENT CHARACTERISTICS.

3.1 Design. The liquid dispenser shall consist of a sealed insulated body with a faucet, two easy-grip, molded-in carrying handles, four snap action high strength plastic cover latches, recessed, molded-in, latch backing plates, and a cover with a gasket. The liquid dispenser shall meet the requirements as specified in Table I and Figure 1.

TABLE I. Maximum Dimensions

Size	Width (inches)	Length (inches)	Height (inches)
1	9	17	18-1/2
2	9	17	24-1/2

Note: The dispensers shall stack and rest one upon another without binding or wobbling.

3.1.1 Body. The body's inner shell and outer shell shall be made of high density plastic, which is FDA food grade approved, and contain urethane foam insulation to comply with the thermal performance requirements specified in 3.2. A recessed faucet shall be located on the 9-inch wide side. The faucet and cover latches shall not extend beyond the surface of the dispenser. Clearance between the bottom of the dispenser and the bottom of the faucet shall not be less than 4 inches. The faucet shall be located at the lowest point of the inner surface which shall be sloped to provide complete drainage.

3.1.2 Cover. The cover shall be sealed, double walled, made of high density plastic, and contain urethane foam insulation to comply with the thermal performance requirements specified in 3.2. The top surface of the cover shall have four depressions to accommodate the cover latches and a hand grip for removing the cover. The cover shall be furnished with a removable gasket and an anti splash air-vent.

3.1.3 Faucet. The faucet shall have two positions, self closing and continuous flow type, and shall be easily removed from the dispenser for cleaning and reassembling without the use of tools. The faucet body, bonnet, and handle shall be made of black nylon or black high density plastic.

3.2 Thermal performance.

3.2.1 Hot. When the dispenser is filled with water at a temperature of $180^{o}F \pm 2^{o}F$, the dispenser shall lose no more than $40^{o}F$ in a 4 hour period when tested at $-20^{o}F \pm 5^{o}F$.

Downloaded from http://www.everyspec.com

Prior to testing, the test dispenser shall be preheated by filling with water at a temperature of 180°F ±5°F, installing the dispenser cover, and holding for 10 minutes, empty, and then test as specified above.

3.2.2 Cold. When the dispenser is filled with water at a temperature of 33°F +2°F, -0°F, the dispenser shall gain no more than 12°F in a 4 hour period when tested at 120°F ±5°F. Prior to testing, the test dispenser shall be pre-chilled by filling with a mixture of ice and water, installing the dispenser cover, and holding for 10 minutes, empty, and then test as specified above.

3.3 Codes and standards. The insulated food containers shall comply with the requirements of NSF International Standard No. 18.

3.4 Molded identification marking ("Government unique" requirement see 7.4). When specified (see 7.2), the insulated liquid dispenser shall be furnished with its identification information molded into the surface of the container, and shall meet the applicable NSF International sanitary requirements. The information required shall be as follows:

National Stock Number
Manufacturer's Name and Address
Manufacturer's Model Number

3.5 Finish. The surface of the liquid dispenser shall comply with the finish requirements of NSF International Standard No. 18. If the exterior surface is textured, a smooth area shall be centered on one end for attachment of a stick-on label for identifying contents by the user.

3.5.1 Caution. Each liquid dispenser shall be permanently, conspicuously, and legibly marked with the following:

DO NOT USE FOR MILK OR MILK PRODUCTS

3.6 Workmanship. The liquid dispensers shall be complete, clean and free of scratches, dents, breaks, sharp edges and corners, and deformities.

3.7 Classes ("Government unique" requirement see 7.4). The body and cover of the two sizes of dispensers shall be either desert sand (class 1) conforming to color No. 30279 of FED-STD-595, or green (class 2) conforming to color No. 34094 or 34095 of FED-STD-595 (see 7.2).

4. REGULATORY REQUIREMENTS.

4.1 Recycled recovered materials. The offeror/contractor is encouraged to use recovered materials to the maximum extent practicable, in accordance with paragraph 23.403 of the Federal Acquisition Regulation (FAR).

Downloaded from http://www.everyspec.com

5. PRODUCT CONFORMANCE PROVISIONS.

5.1 Product conformance. The contractor shall certify, and maintain substantiating evidence, that the product offered meets the salient characteristics and requirements of this Commercial Item Description, and except for any Government unique requirements specified, conforms to the producer's own drawings, specifications, standards, and quality assurance practices, and is the same product offered for sale in the commercial marketplace, or is the same product that has successfully been delivered to the Government on a previous contract or purchase order. The Government reserves the right to require proof of such conformance prior to first delivery and thereafter as may be otherwise provided for under the provisions of the contract.

5.2 Metric products. Products manufactured to metric dimensions will be considered on an equal basis with those manufactured using inch-pound units, provided they fall within the tolerances specified using conversion tables contained in the latest revision of FED-STD-376, and all other requirements of this Commercial Item Description are met. If a product is manufactured to metric dimensions and those dimensions exceed the tolerances specified in the inch-pound units, a request should be made to the contracting officer to determine if the product is acceptable. The contracting officer has the option of accepting or rejecting the product.

5.3 NSF International standard compliance. Prior to approval of the first shipment, the contractor shall submit satisfactory evidence to the contracting officer or his authorized representative that the liquid dispensers conform to the applicable requirements of NSF International Standard No. 18. Acceptable evidence of meeting the requirements of NSF International Standard No. 18 shall be a listing in the current edition of the NSF International "Listing of Food Service Equipment" and display of the NSF International mark on the finished product, or a certified test report from a recognized independent laboratory acceptable to the medical authority of the Government indicating the item complies with the applicable NSF International requirements. Acceptability of the testing laboratory by the medical authority of the Government will be obtained prior to the award of any contract of procurement document.

6. PACKAGING.

6.1 Preservation, packing, and marking. The preservation, packing, and marking shall be as specified in the contract or purchase order (see 7.2).

7. NOTES.

7.1 Intended use. The insulated liquid dispensers are intended for use in transporting either hot (180°F to 200°F) or cold (35°F to 40°F) liquids to remote field feeding sites.

Downloaded from http://www.everyspec.com

7.2 Acquisition requirements. Acquisition documents must specify the following:

a. CID document number, revision, and CID PIN.
b. Size and class of dispensers required (see 2.1 and 3.7).
c. When molded identification marking is required (see 3.4).
d. Type of packing required (see 6.1).
e. When palletization of shipping containers is required (see 6.1).

7.3 Sources for documents.

7.3.1 Source of information for nongovernmental document is as follows:

Copies of NSF International Standard No. 18 may be obtained from: NSF International, P.O. BOX 130140, Ann Arbor, MI 48113-0140, telephone (734) 769-8010 or on the Internet at: www.nsf.org.

7.3.2 Source of information for governmental document is as follows:

Copies of military and Federal documents are available from: Standardization Documents Order Desk, Document Automation and Production Service, 700 Robbins Avenue, Building 4D, Philadelphia, PA 19111-5094 or on the Internet at: http://assist.daps.dla.mil/quicksearch/.

7.4 "Government unique" requirements. Whenever a "Government unique" requirement is included in the title of a paragraph under "Salient Characteristics", it is meant that the requirement is something that is not normally offered to the commercial marketplace by the manufacturer.

Downloaded from http://www.everyspec.com

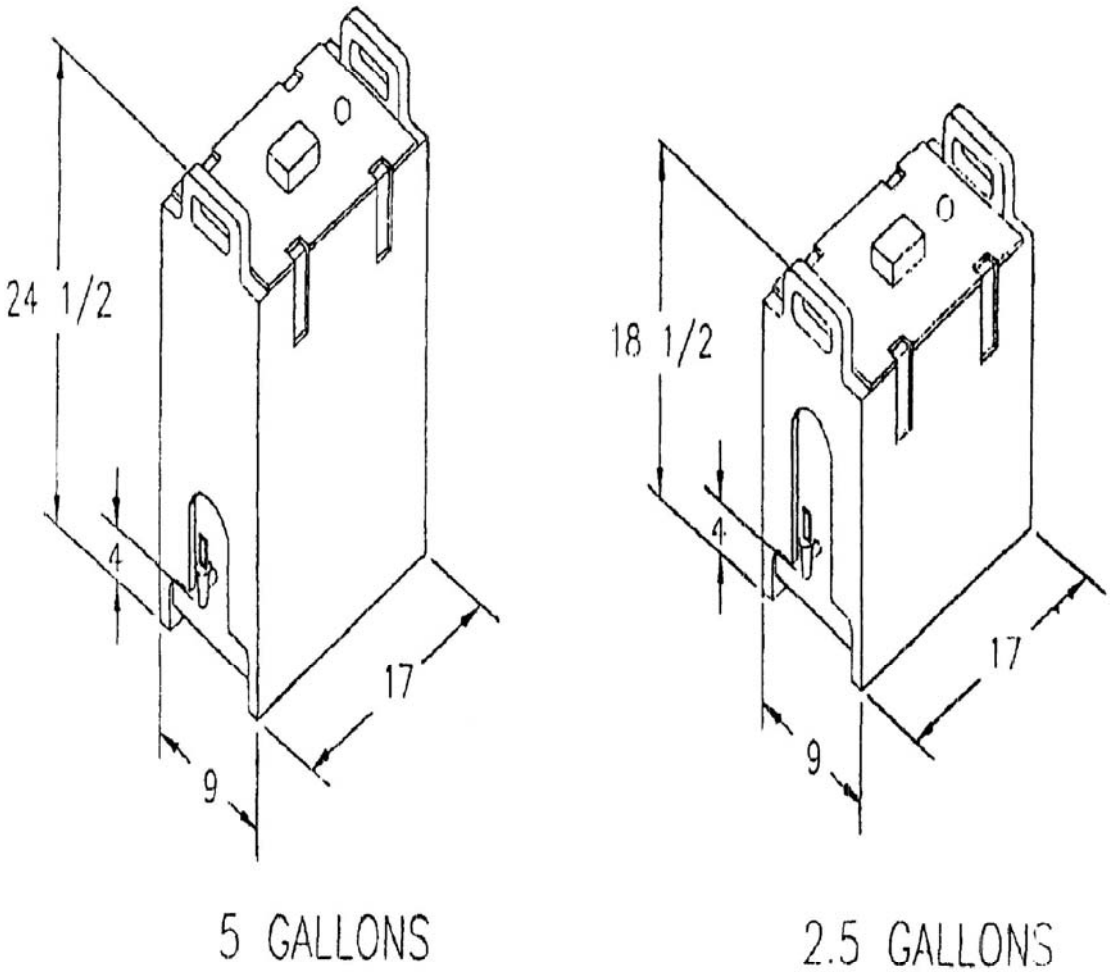

INSULATED LIQUID DISPENSER

FIGURE 1

Downloaded from http://www.everyspec.com

MILITARY INTERESTS:

Custodians:

Army - GL
Navy - SA
Air Force - 99

Review Activities:

Army - AV, MD, QM
Navy - MC
Air Force - 35, 84

CIVIL AGENCY COORDINATING ACTIVITY:

GSA - FSS

PREPARING ACTIVITY:

DLA-SS

(Project No. 7320-2009-001)

NOTE: The activities listed above were interested in this document as of the date of this document. Since organizations and responsibilities can change, you should verify the currency of the information above using the ASSIST Online database at http://assist.daps.dla.mil.