[INCH-POUND]
A-A-52160B
4 May 2017
SUPERSEDING
A-A-52160A
18 January 2011

COMMERCIAL ITEM DESCRIPTION

INDUSTRIAL V-BELTS (MULTIPLE DRIVE)

The General Services Administration has authorized the use of this commercial item description for all federal agencies.

1. SCOPE. This commercial item description (CID) covers the general requirements for V-type industrial drive belts. V-type industrial drive belts covered by this CID are intended for commercial/industrial applications.

2. CLASSIFICATION/PART IDENTIFICATION NUMBER (PIN). This CID uses a classification system, which is included in the PIN as shown in the following example (see 7.1).

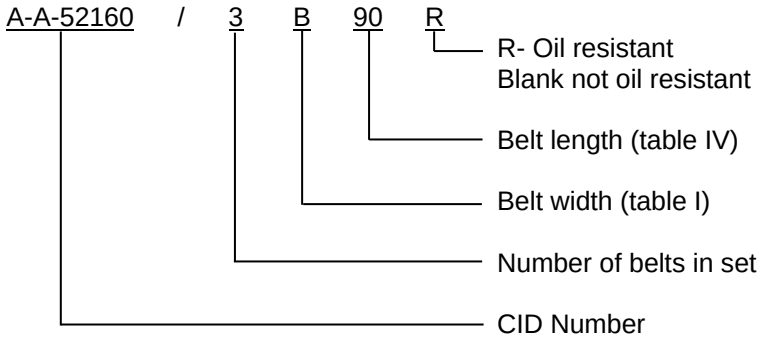

PIN Examples:

A-A-52160/3B90R indicates a belt 0.66 inches wide, standard datum length of 91.8 inches with oil resistant capabilities. Three belts in a set.

A-A-52160/216C4200R indicates a belt 16 mm wide, standard datum length 4200 mm with oil resistant capabilities, 2 belts.

3. SALIENT CHARACTERISTICS.

3.1 Material and dimensions. The belt dimensions, tolerances, and method of measurement shall be in accordance with RMA IP-20. Multiple drive belts shall meet the requirements of RMA IP-20 to ensure that multiple drive belts meet the tolerances and will run together on multiple-belt drives and effectively share the load that is being transmitted.

Comments, suggestions, or questions on this document should be addressed to: DLA Land and Maritime, Attn: VAI, P.O. Box 3990, Columbus, OH 43218-3990, or emailed to FluidFlow@dla.mil. Since contact information can change, you may want to verify the currency of this address information using the ASSIST Online database at https://assist.dla.mil.

AMSC N/A

FSC 3030

3.1.1 Belt cords. Belt cords shall be pre-stretched and impregnated with a rubber compound.

3.1.2 Conductive. The belts shall be static conductive type in accordance with RMA IP-3-3.

3.1.3 Belt width. Belt width and designator shall be in accordance with table I.

TABLE I. Width and designator.

Width designator Inch	Width - inches
A	.50
B	.66
C	.88
D	1.25
Width designator metric	Width - mm
13C	13
16C	16
22C	22
32C	32

3.2 Functional test. The belts shall not crack break or require more torque to start or continue rotation than that specified in table II, the following details shall apply:

a. Place the belt in an unrestrained horizontal position so that, it does not contact the sidewalls of the test chamber.
b. Maintain the temperature of the oven at 150°F ± 2°F (65.5 ± 2.2°C) for 12 hours.
c. At the end of the 12-hour period, remove the belt from the oven and allow the belt to cool for 30 minutes at room temperature.
d. Install the belt on the pulley arrangement shown on figure 1 and apply tension as specified in table III.
e. Lock the tension pulley location; remove the tension weights from the belts, then place the assembly in a cold chamber at a temperature of minus 40°F± 2°F (4.4 ± °C) for 12 hours.
f. At the end of the 12 hour period while the assemble is still at minus 40°F ± 2°F (4.4 ± 2.2°C) rotate the pulley until the belt has been rotated not less than two complete revolutions.
g. Measure and record the torque required to start and the torque required to continue rotation, then remove the belt from the assembly and examine for evidence of cracking.
h. Any evidence of cracking, or torque necessary to start or continue rotation in excess of the amount specified in table II shall constitute failure of this test.

TABLE II. Torque.

Width (see table I)		Torque required to start		Torque required to continue	
Inch	mm	Ft-lbs	Nm	Ft-lbs	Nm
A	13C	26	35	13	17
B	16C	30	40	15	20
C	22C	45	61	30	40

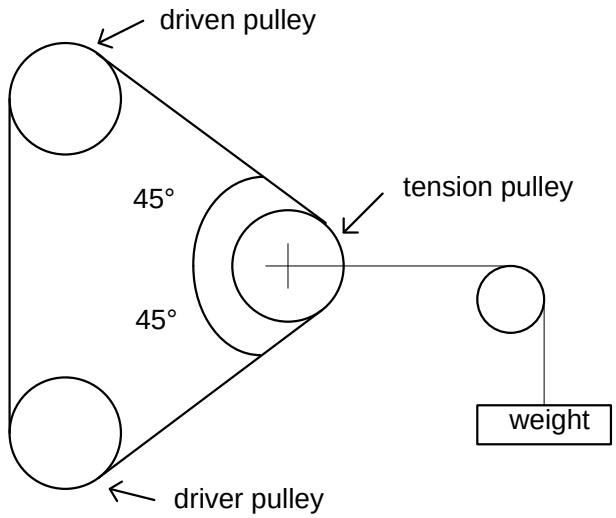

FIGURE 1. Pulley arrangement.

TABLE III. Pulley size.

Belt cross section		Pulleys, driver & driven		Tension pulley		Tension weights	
Inch	mm	Inches	cm	Inches	cm	lbs	newton's
A	13C	5.0	13	3.5	9	35	155
B	16C	6.0	15	5.0	13	45	200
C	22C	7.0	18	7.0	18	115	510

3.3 Representative cross-section. The belts in A (13C), B (16C) and C (22C) cross-sections shall be representative of D (32C) cross-section for the temperature test provided they are manufactured with the same basic compounds and tensile members.

3.4 Oil resistant belts. For oil resistant belts, the thickness shall increase no more than 20%, nor decrease more than 1% when immersed in IRM 901 and IRM 902 oils as cited in ASTM D471. The test shall consist of two 3 inch (7.6mm) long sections of belt being immersed in a 150°F (70° C) oil bath for 22 hours. The average of 3 measurements, the center point and ½ inch (13mm) from each end, shall constitute the thickness.

3.5 Shelf life. When required the age of the belts shall not be more than 12 months old from the date of manufacture to the date of acceptance by the government.

3.6 Belt marking. The V-belt/belts supplied to this CID shall be marked with the manufacturer's (MFR's) standard commercial PIN.

3.7 Unit pack. The PIN marked on the unit pack shall be the CID PIN, date of manufacture MM/YY (05/17), additionally when a set of multiple drive belts are required the unit pack shall be marked "MATCHED".

3.8 Class I and II ozone depleting substances (ODS). Class I and II ODS shall not be used in A-A-52160 or any referenced specifications/procedures.

TABLE IV. Belt length.

Standard pitch lengths - Inches

Length designator (inch)	Inch width designator (see table I)			
	A	B	C	D
	Standard length (inches)			
26	27.3	---	---	---
31	32.3	---	---	
35	36.3	36.8	---	---
38	39.3	39.8	---	---
42	43.3	43.8	---	---
46	47.3	47.8	---	---
51	52.3	52.8	53.9	---
55	56.3	56.8	---	---
60	61.3	61.8	62.9	---
68	69.3	69.8	70.9	---
75	75.3	76.8	77.9	---
80	81.3	---	---	---
81	---	82.8	83.9	---
85	86.3	86.8	87.9	---
90	91.3	91.8	92.9	---
96	97.3	---	98.9	---
97	---	98.8	---	---
100	106.3	106.8	107.9	---
110	113.3	113.8	114.9	---
120	121.3	121.8	122.9	123.3
128	129.3	129.8	130.9	131.3
144	---	145.8	146.9	147.3
158	---	159.8	160.9	161.3
173	---	174.8	175.9	176.3
180	---	181.8	182.9	183.3
195	---	196.8	197.9	198.3
210	---	211.8	212.9	213.3
240	---	240.3	240.9	240.8
270	---	270.3	270.9	270.8
300	---	300.3	300.0	300.8
330	---	---	330.9	330.8
360	---	---	360.9	360.8
390	---	---	390.9	390.8
420	---	---	420.9	420.8
480	---	---	---	480.8
540	---	---	---	540.8
600	---	---	---	600.8
660	---	---		660.8

Standard pitch lengths - mm

Metric width designator (see table I)			
13C	16C	22C	32C
Metric standard length designator (mm)			
710	---	---	---
750	---	---	---
800	---	---	---
850	---	---	---
900	---	---	---
950	960	---	---
1000	1040	---	---
1075	1090	---	---
1120	1120	---	---
1150	1190	---	---
1230	1250	---	---
1300	1320	---	---
1400	1400	1400	---
1500	1500	1500	---
1710	1700	---	---
1790	1800	1830	---
1865	1900	1900	---
1965	1980	2000	---
2120	2110	2160	---
2220	2240	2260	---
2350	2360	2390	---
2500	2500	2540	---
2600	2620	2650	---
2730	2820	2800	---
2910	2920	3030	---
3110	3130	3150	3190
3310	3330	3350	3390
---	3530	3550	---
---	3740	3760	3800
---	4090	4120	4160
---	4200	4220	4250
---	4480	4500	4540
---	4650	4680	4720
---	5040	5060	5100
---	5300	5440	5480
---	5760	5780	5800
---	6140	6150	6180
---	6520	6540	6560
---	6910	6920	6940
---	7290	7300	7330
---	7670	7680	---
---	---	8060	8090
---	---	8440	8470
---	---	8820	8850
---	---	9200	9240
---	---	---	10000
---	---	---	10760
---	---	---	11530
---	---	---	12290

4. REGULATORY REQUIREMENTS. The offeror/contractor is encouraged to use recovered materials to the maximum extent practicable, in accordance with 23.403 of the Federal Acquisition Regulation (FAR).

5. PRODUCT CONFORMANCE PROVISIONS.

5.1 Product conformance. The products shall meet the salient characteristics of this CID, conform to the producer's own drawings, specifications, standards, and quality assurance practices, and be the same product offered for sale in the commercial market. The Government reserves the right to require proof of such conformance.

6. PACKAGING. Preservation, packaging, and marking shall be as specified in the contract or order.

7. NOTES.

7.1 The PIN should be used for Government purposes to buy commercial products to this CID. See section 2 for PIN format example

7.2 Commercial and Government Entity (CAGE) code. For ordering purposes, inventory control, and submission of these plugs, pipe, magnetic, headless: iron, steel or aluminum alloy to DLA Land and Maritime under the Parts Management Advisory Team (PMAT), CAGE code 58536 should be used.

7.3 Source of documents.

FEDERAL STANDARDS

FED-STD-123 - Marking for Shipment (Civil Agencies)

DEPARTMENT OF DEFENSE STANDARDS

MIL-STD-129 - Military Marking for Shipment and Storage

(Copies of these documents are available online at http://quicksearch.dla.mil.)

DEPARTMENT OF DEFENSE

DoD4140.27 - Shelf Life Management Manual

(Copies of this document are available online at http://www.dtic.mil.)

Federal Regulations

FEDERAL ACQUISITION REGULATION (FAR)

FAR 23.403 - Federal Acquisition Regulations

(Copies of this document are available online at www.acquisition.gov/comp/far/index.html or from the U.S. Government Printing Office, 732 North Capital Street, NW, Washington D.C. 20401.)

Other Publications

ASTM INTERNATIONAL

ASTM D471	-	Standard Test Method for Rubber Property-Effect of Liquids

(Copies of these documents are available online at http://www.astm.org or from the ASTM International, P.O. Box C700, 100 Barr Harbor Drive, West Conshohocken, PA 19428-2959.)

RUBBER MANUFACTURERS ASSOCIATION

RMA IP-20	-	Classical V-Belts and Sheaves
RMA IP-3-3	-	Static Conductive Test Method for Power Transmission Belts

(Copies of these documents are available online at https://www.rma.org or from the Rubber Manufactures Association, 1400 K St., N.W., Washington D.C. 20005.)

7.4 Ordering data. The contract or order should specify the following:

a. CID document number, revision, and CID PIN.

b. Product conformance provisions.

c. Packaging requirements (see 5.1).

d. Shelf life (see 3.5 and 7.6).

7.5 Government users. To acquire information on obtaining these belts, from the Government inventory system, contact Defense Supply Center Columbus, ATTN: DLA Land and Maritime Call Center (-NAB), P.O. Box 3990, Columbus, OH 43218-3990 or telephone (614) 692-2271 or (614) 692-3191.

7.6 Shelf life. This CID covers items where the assignment of a Federal shelf-life code is a consideration. Specific shelf-life requirements should be specified in the contract or purchase order, and should include, as a minimum, shelf-life code, shelf-life package markings in accordance with MIL-STD-129 or FED-STD-123, preparation of a materiel quality storage standard for type II (extendible) shelf-life items, and a minimum of 85 percent shelf-life remaining at time of receipt by the Government. These and other requirements, if necessary, are in DoD4140.27-M, *Shelf- life Management Manual*. The shelf-life codes are in the Federal Logistics Information System Total Item Record. Additive information for shelf-life management may be obtained from DoD 4140.27-M, or the designated shelf-life Points of Contact (POC). The POC should be contacted in the following order: (1) the Inventory Control Points that manage the item and (2) the DoD Service and Agency administrators for the DoD Shelf-Life Program. Appropriate POCs for the DoD Shelf-Life Program can be contacted through the DoD Shelf-Life Management website: https://www.shelflife.hq.dla.mil/.

7.7 Subject term (key word) listing.
Conductive
Matched
Oil resistant
Rubber

MILITARY INTERESTS:

Custodians:
Army - AR
Navy - SH
Air Force - 99
DLA - CC

Review activities:
Army - AT, MI
Navy - AS, CG, SA, YD
Air Force - 71

CIVIL AGENCY COORDINATING ACTIVITY:

GSA - FAS

Preparing activity:

DLA - CC

(Project 3030-2017-002)

NOTE: The activities listed above were interested in this document as of the date of this document. Since organizations and responsibilities can change, you should verify the currency of the information above using the ASSIST Online database at https://assist.dla.mil.