Downloaded from http://www.everyspec.com

REPORT DOCUMENTATION PAGE

Form Approved
OMB No. 0704-0188

The public reporting burden for this collection of information is estimated to average 1 hour per response, including the time for reviewing instructions, searching existing data sources, gathering and maintaining the data needed, and completing and reviewing the collection of information. Send comments regarding this burden estimate or any other aspect of this collection of information, including suggestions for reducing this burden, to Department of Defense, Washington Headquarters Services, Directorate for information on Operations and Reports (0704-0188), 1215 Jefferson Davis Highway, Suite 1204, Arlington, VA 22202-4302. Respondents should be aware that notwithstanding any other provision of law, no person shall be subject to any penalty for failing to comply with a collection of information if it does not display a currently valid OMB control number.
PLEASE DO NOT RETURN YOUR FORM TO THE ABOVE ADDRESS.

1. REPORT DATE *(DD-MM-YYYY)*
18-09-2008

2. REPORT TYPE
Final

3. DATES COVERED *(From - To)*

4. TITLE AND SUBTITLE
Test Operations Procedure (TOP)
2-1-007 Dynamic Displacement Measurement

5a. CONTRACT NUMBER

5b. GRANT NUMBER

5c. PROGRAM ELEMENT NUMBER

6. AUTHORS

5d. PROJECT NUMBER

5e. TASK NUMBER

5f. WORK UNIT NUMBER

7. PERFORMING ORGANIZATION NAME(S) AND ADDRESS(ES)
Ballistic Instrumentation Division (TEDT-AT-SLB)
400 Colleran Road
Aberdeen Proving Ground, MD 21005

8. PERFORMING ORGANIZATION REPORT NUMBER
TOP 2-1-007

9. SPONSORING/MONITORING AGENCY NAME(S) AND ADDRESS(ES)
Test Business Management Division (TEDT-TMB)
US Army Developmental Test Command
314 Longs Corner Road
Aberdeen Proving Ground, MD 21005-5055

10. SPONSOR/MONITOR'S ACRONYM(S)

11. SPONSOR/MONITOR'S REPORT NUMBER(S)
Same as item 8

12. DISTRIBUTION/AVAILABILITY STATEMENT
Approved for public release; distribution unlimited.

13. SUPPLEMENTARY NOTES
Defense Technical Information Center (DTIC), AD No.: ADA486713

14. ABSTRACT
This TOP describes the selection, setup and operation of the various instrumentation used for measurement of dynamic displacement events, as a part of vehicle live fire vulnerability testing.

15. SUBJECT TERMS

Laser	Piezopin	Eddy Current
Linearity	Comb Gage	String Pull Transducer

16. SECURITY CLASSIFICATION OF:			**17. LIMITATION OF ABSTRACT**	**18. NUMBER OF PAGES**	**19a. NAME OF RESPONSIBLE PERSON**
a. REPORT	**B. ABSTRACT**	**C. THIS PAGE**			**19b. TELEPHONE NUMBER** *(include area code)*
Unclassified	Unclassified	Unclassified	SAR	16	

Standard Form 298 (Rev. 8-98)
Prescribed by ANSI Std. Z39-18

Downloaded from http://www.everyspec.com

Downloaded from http://www.everyspec.com

US ARMY DEVELOPMENTAL TEST COMMAND
TEST OPERATIONS PROCEDURE

Test Operations Procedure 2-1-007 18 September 2008
DTIC AD No.: ADA486713

Dynamic Displacement Measurement

			Page
Paragraph	1.	SCOPE	1
	2.	FACILITIES AND INSTRUMENTATION	1
	2.1	Facilities	1
	2.2	Instrumentation	2
	3.	REQUIRED TEST CONDITIONS	2
	4.	TEST PROCEDURES	2
	5.	DATA REQUIRED	4
	6.	PRESENTATION OF DATA	4
APPENDIX	A.	PIEZOPINS	A-1
	B.	LASERS	B-1
	C.	STRING PULL TRANSDUCERS	C-1
	D.	EDDY CURRENT	D-1
	E.	COMB GAGE	E-1

Approved for public release; distribution unlimited.

Downloaded from http://www.everyspec.com

1. SCOPE.

This TOP describes the selection, setup and operation of the various instrumentation used for measurement of dynamic displacement events, as a part of vehicle vulnerability testing.

Background. The term "dynamic displacement" for this TOP is defined as the rapid movement of a structure undergoing deformation resulting from a ballistic event. Dynamic displacement measurements are made to obtain a plot of the distance traveled by various structures under study versus their time of travel. This distance-time-curve provides a graphic indication of elastic deformation and permanent plastic deformation as the event unfolds.

2. FACILITIES AND INSTRUMENTATION.

2.1 Facilities.

No facilities required.

2.2 Instrumentation.

Devices for Measuring	Permissible Measurement Uncertainty
Displacement	±2mm
Voltage, DC, -10 to +10	0.05% of reading
Travel Time, 0 to 50 msec	0.02% of reading
Time	±10 msec

3. REQUIRED TEST CONDITIONS.

a. Visually examine the compartment where displacement measurement is expected to take place.

b. Instrumentation selection.

(1) Consider the type of instrument to be used and the amount of deformation expected.

(2) Consider environmental conditions.

(3) Instrument the test article before temperature conditioning.

(4) Consider proper sampling rate and memory size to record the entire event.

(5) Protect interface instrumentation from adverse conditions.

(6) Secure and protect cabling.

Downloaded from http://www.everyspec.com

4. TEST PROCEDURES.

a. Selection of measurement system.

(1) Before conducting a displacement measurement test, consideration should be given to selecting the most appropriate measurement system for the test requirements. Systems used for displacement measurement consist chiefly of two components:

(a) Detector.

(b) Data Acquisition Equipment.

b. The detector senses the position of the structure undergoing dynamic displacement. The data acquisition equipment creates a record that correlates the displacement versus time data from the detection and timing system outputs.

c. Following instrumentation emplacement, verify that the system is functioning. This is accomplished through various means but the end objective is to confirm the output of the detector for a given simulated displacement.

d. The various instruments that have been used for measuring displacement under dynamic conditions are described in appendices A through E. The systems and their features that could be considered before making a selection are:

(1) The Piezopin is a time of arrival detector that uses the piezoelectric effect to transform a force caused by a moving structure into a measurable voltage. Because the nature of the signal is a single pulse a displacement versus time curve can only be created through the use of a cluster of piezopins set at different offsets. The limitations of this system are that a larger area is measured for displacement as opposed to single point measurement and of course the single pulse indicating time of arrival for the moving structure.

(2) The Laser used in displacement measurement is based upon Lasers used in commercial activities for gaging displacement in various manufacturing operations. The signal coming from the Laser detector is continuous and can provide an indication of displacement over time to the maximum limit of its sampling rate. Limitations associated with Lasers are the cost of ownership and replacement, especially in applications where instrumentation is subject to destruction. Additionally, debris moving through the field of view of the detector can interrupt the signal causing spikes in the data or data loss.

Downloaded from http://www.everyspec.com

(3) String Pull Transducers

String pull transducers, also referred to as string pot, draw wire sensors or more technically Cable Extension Transducers employ a flexible cable and spring loaded spool to measure linear distances and velocities. Reliable measurement ranges can be from 0 to 1700 inches. Durability of the transducer is highly dependent on the application. String Pull Transducers have been successfully employed in recoil applications but have been unable to measure displacements of structures in ballistic events where the speeds are substantially higher. Shortcomings of the transducer are usually related to misalignment and higher than expected velocities causing the string to be improperly fed back into the drum and leading to jams and loss of the transducer.

(4) The Comb Gage is a thin piece of sheet steel with varying lengths of indicators that deform on contact with a moving structure. Limitation of the Comb Gage is related to its measurement of plastic deformation only.

e. The accuracy of the various measurement methods is dependent upon two factors:

(1) Calibration involves the relating of some point or points within the measurement range of the device to known distance values. This establishes a ratio of actual distance measured to device output that can be expressed as either gage factor or sensitivity.

(2) Linearity is the variation of the measured points obtained in calibration to a mathematically weighted straight line passing through zero. Deviation from the straight line is expressed as a percent linearity.

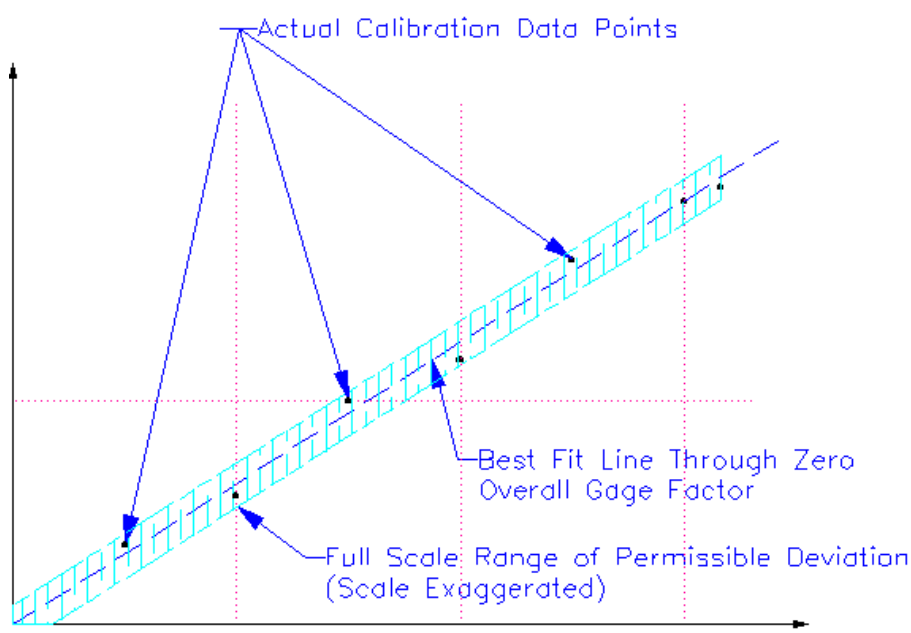

Figure 1. Full Scale Linearity and its relationship to individual calibration points and the best fit line through zero. The Full Scale window would be much smaller than depicted in this graphic.

Downloaded from http://www.everyspec.com

(3) Detector resolution is the length of the smallest movement that can be sensed by the detector. This value is usually expressed in mm or as a percentage of total detector output. Resolution of the data record is also impacted by the sampling rate of the data acquisition system.

f. Setup of Selected System. Setup requirements vary with the system selected. Individual system setups and calibration requirements are given in the appropriate appendices.

5. DATA REQUIRED.

a. Structural Motion Data (displacement versus time of travel).

b. Velocity.

c. Acceleration.

d. Maximum Deflection.

6. PRESENTATION OF DATA.

Data presentation should be in the form of displacement versus time. Reduce and present data collected during all tests in accordance with applicable appendices.

Downloaded from http://www.everyspec.com

Downloaded from http://www.everyspec.com

APPENDIX A. PIEZOPINS

Figure 1. Transducer Selection. A variety of Piezopin designs are available, each possessing characteristics that may offer specific advantages to the test activity.

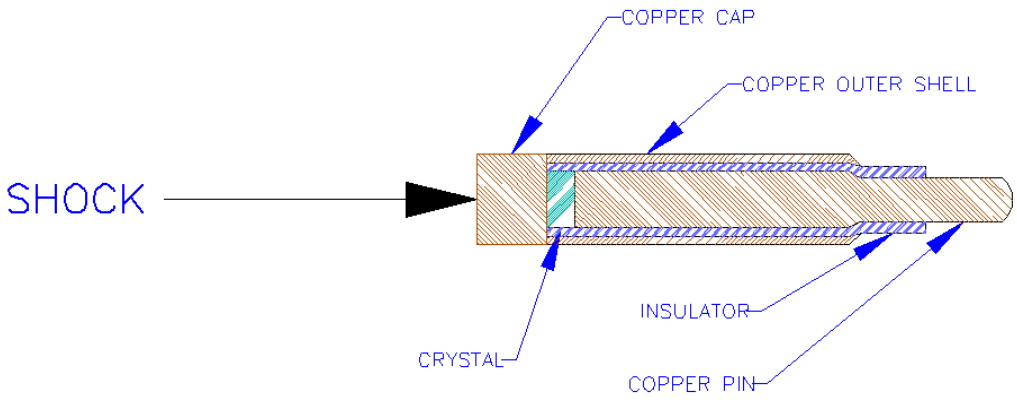

Figure 2. Piezopin General Layout. Output from the Piezopin is obtained through the use of a specialty cable that will provide a voltage signal to the data acquisition system. Different Crystal thicknesses provide different pulse durations but are on the order of 0.015 µsec to 0.030 µsec. The data acquisition system should possess adequate resolution to record the pulse. Voltages can also range from 70 to 100 Volts depending upon the force of impact.

Figure 3a. Multiple Piezopins arrayed in a Nylon Block for measuring different levels of deformation.

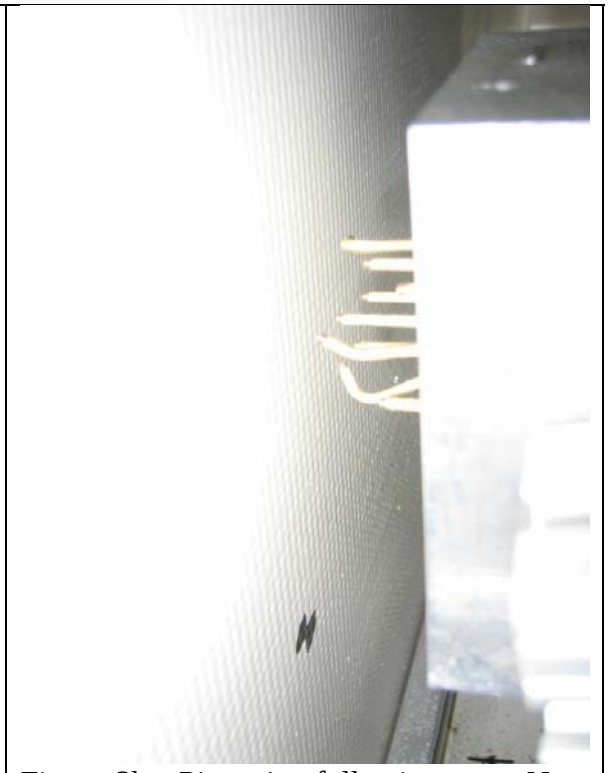

Figure 3b. Piezopins following test. Note pin deformation caused by wall movement.

Downloaded from http://www.everyspec.com

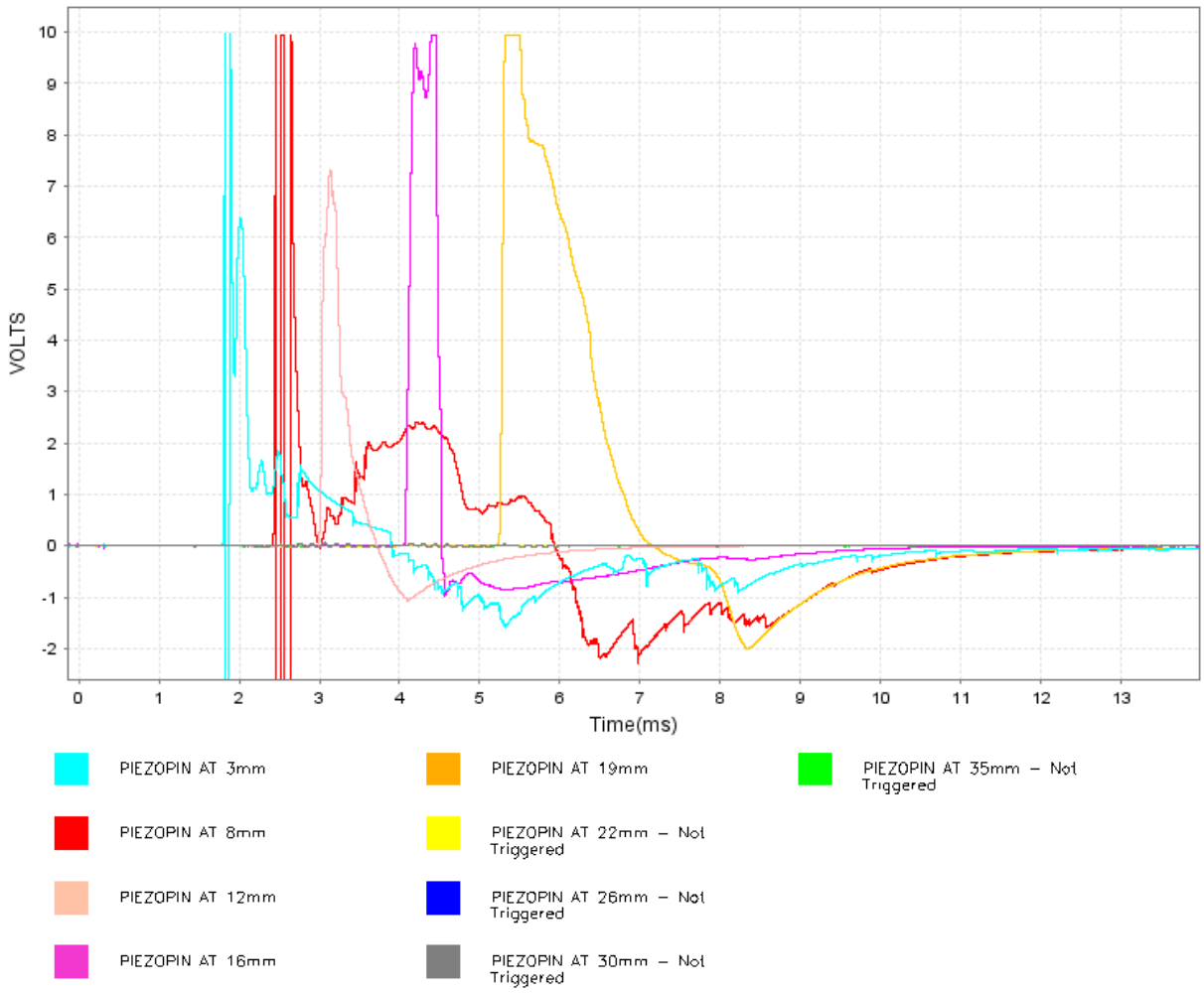

Figure 4. Typical Piezopin output using a matrix of pins at different heights. Note that the pins furthest from the displaced surface were not triggered.

Downloaded from http://www.everyspec.com

APPENDIX B. LASERS

1. Transducer Selection. The Laser offers the tester the opportunity to record a travel versus time curve with millisecond resolution. Different Lasers offer different measurement ranges and standoff distances.

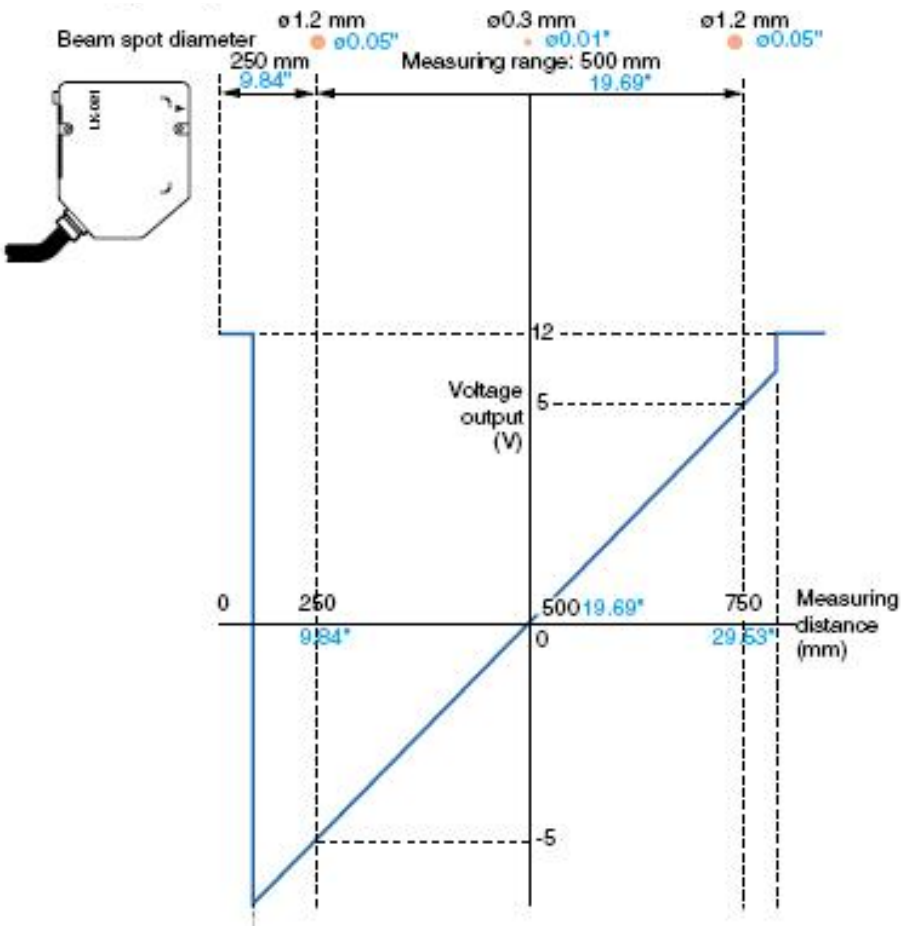

Figure 5. Graphic showing the relationship between Standoff Distance and Measurement Range. For this example, the Standoff Distance is 250mm while the Measurement Range is 500mm beyond the Standoff Distance.

2. A Laser is a high energy device that can injure a person looking into its beam or a reflection of the beam. For this reason Lasers are broken down into Hazard Classifications which describe the precautions necessary for use. Hazard Classification standards vary from country to country and the tester should be familiar with these, as well as additional restrictions placed on use of Lasers on their specific test range. Lasers used in Displacement Measurement are typically in the Class 3 Hazard category and require special glasses when in use.

3. Standoff Distance and Measurement Range. These two criteria are principally used in the selection of a Laser for Displacement Measurement. Lasers with a small Standoff Distance are typically subject to damage from proximity to the moving structure.

Downloaded from http://www.everyspec.com

4. Cabling. Lasers typically employ a separate power supply and may also have circuitry that converts the signal to useful analog or digital signal. This cabling will be subject to flying debris in the test application and should be protected against damage to assure signal continuity.

5. Laser Types in Use:

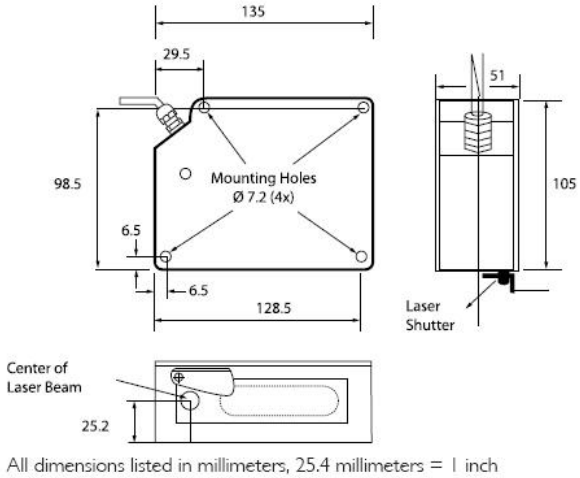

Standoff Distance:	**750mm**
Measurement Range:	**1000mm**
Linearity:	**0.50mm**

Figure 6a. Selcom SLS-51000/1250

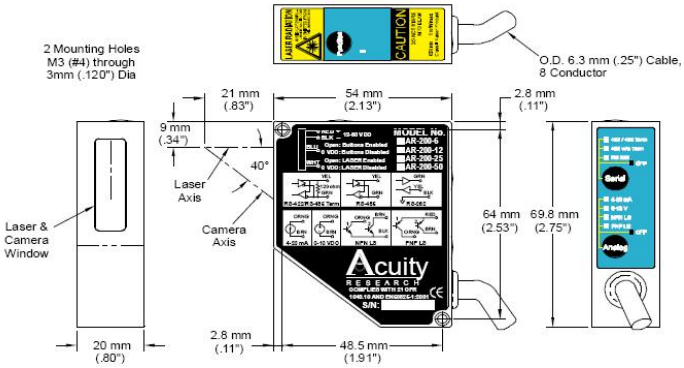

Standoff Distance:	**42.4mm**
Measurement Range:	**50mm**
Linearity:	**0.10mm**

Figure 6b. Acuity AR-200-50

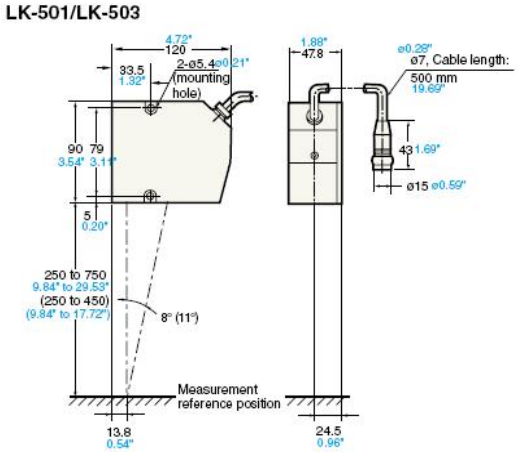

Standoff Distance:	**250mm**
Measurement Range:	**500mm**
Linearity:	**±0.1% FS**

Figure 6c. Keyence LK-503

Downloaded from http://www.everyspec.com

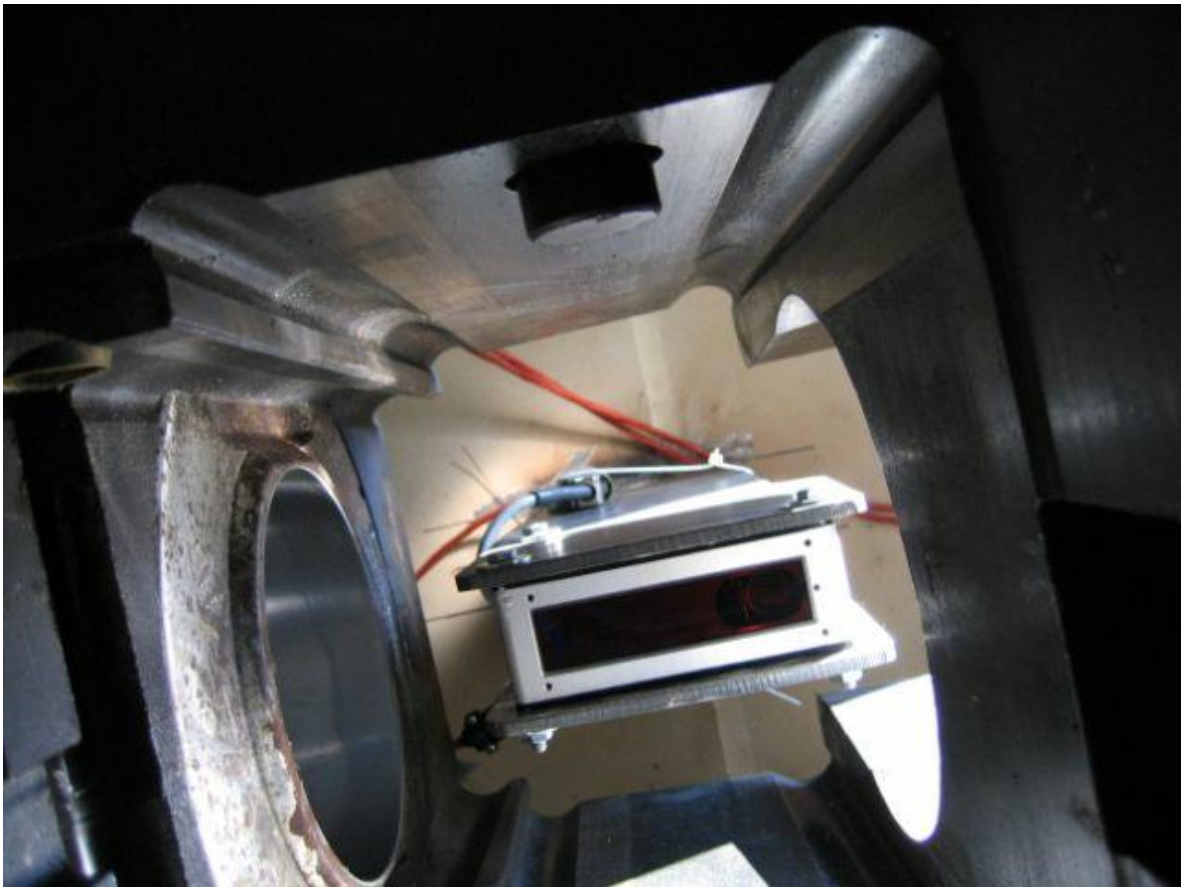

Figure 7. SLS-51000/1250 installation in Main Battle Tank for measurement of Turret Floor deflection.

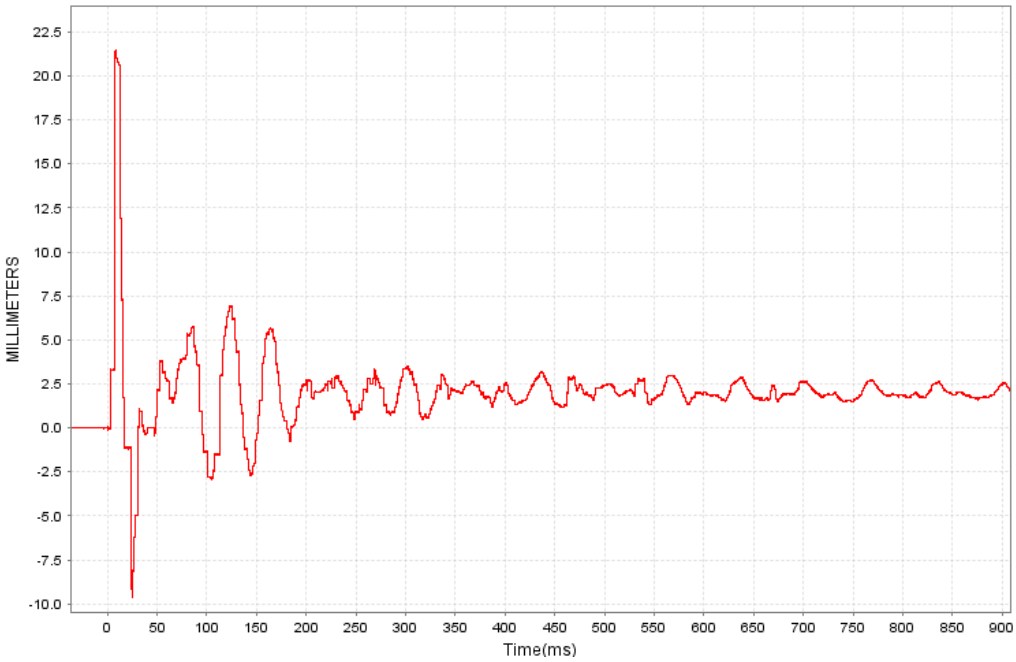

Figure 8. Output from a Keyence LK-503 Laser showing the oscillations in a surface undergoing displacement in a ballistic event.

Downloaded from http://www.everyspec.com

Downloaded from http://www.everyspec.com

APPENDIX C. STRING PULL TRANSDUCERS

1. Transducer Selection. The String Pull Transducer can record a travel versus time curve with millisecond resolution in displacement events with low velocities. Motions of rotating or translating structures affected by other ballistic events are the best application for these devices because of the limited tensile strength of the filament.

2. Transducer Types in use.

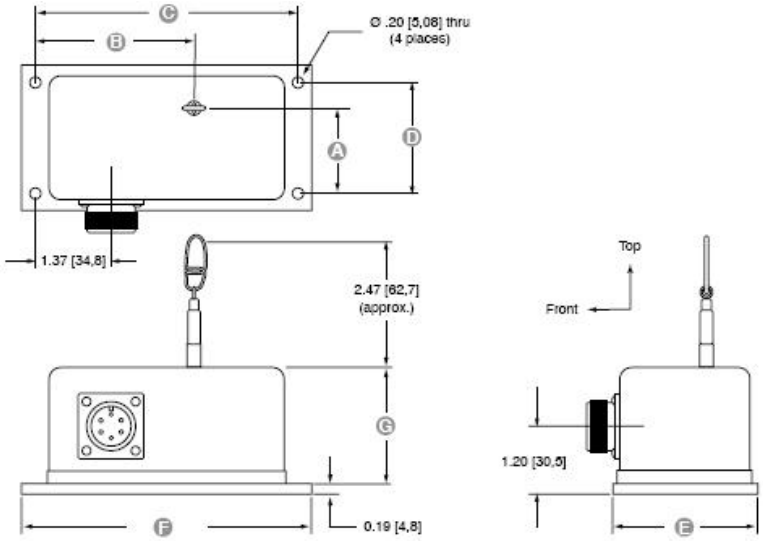

Full Stroke Range:	**0-2 thru 0-100 inches**
Excitation:	**10V (Typical)**
Linearity:	**±0.25%**

Figure 8a. Celesco PT101 Series Cable Extension Transducer.

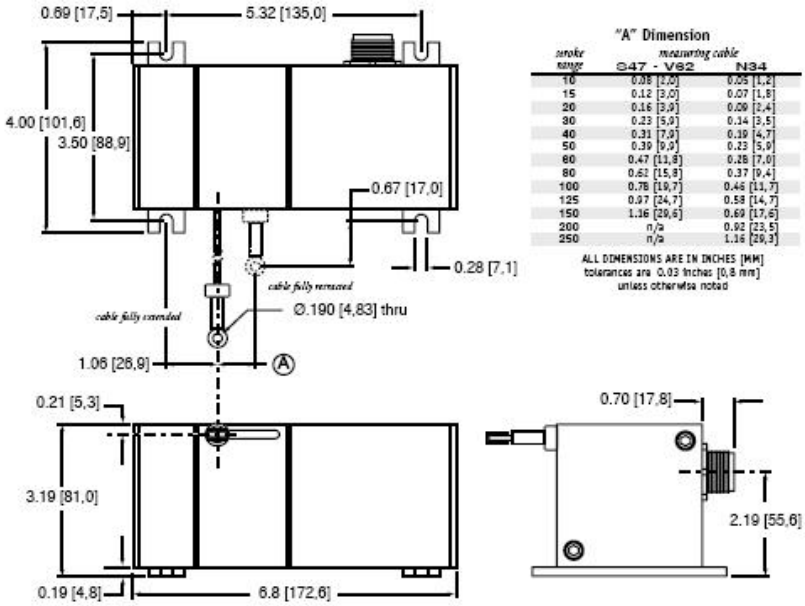

Full Stroke Range:	**0-10 thru 0-250 inches**
Excitation:	**10V (Typical)**
Linearity:	**±0.25%**

Figure 8b. Celesco PT5A Series Cable Extension Transducer.

Downloaded from http://www.everyspec.com

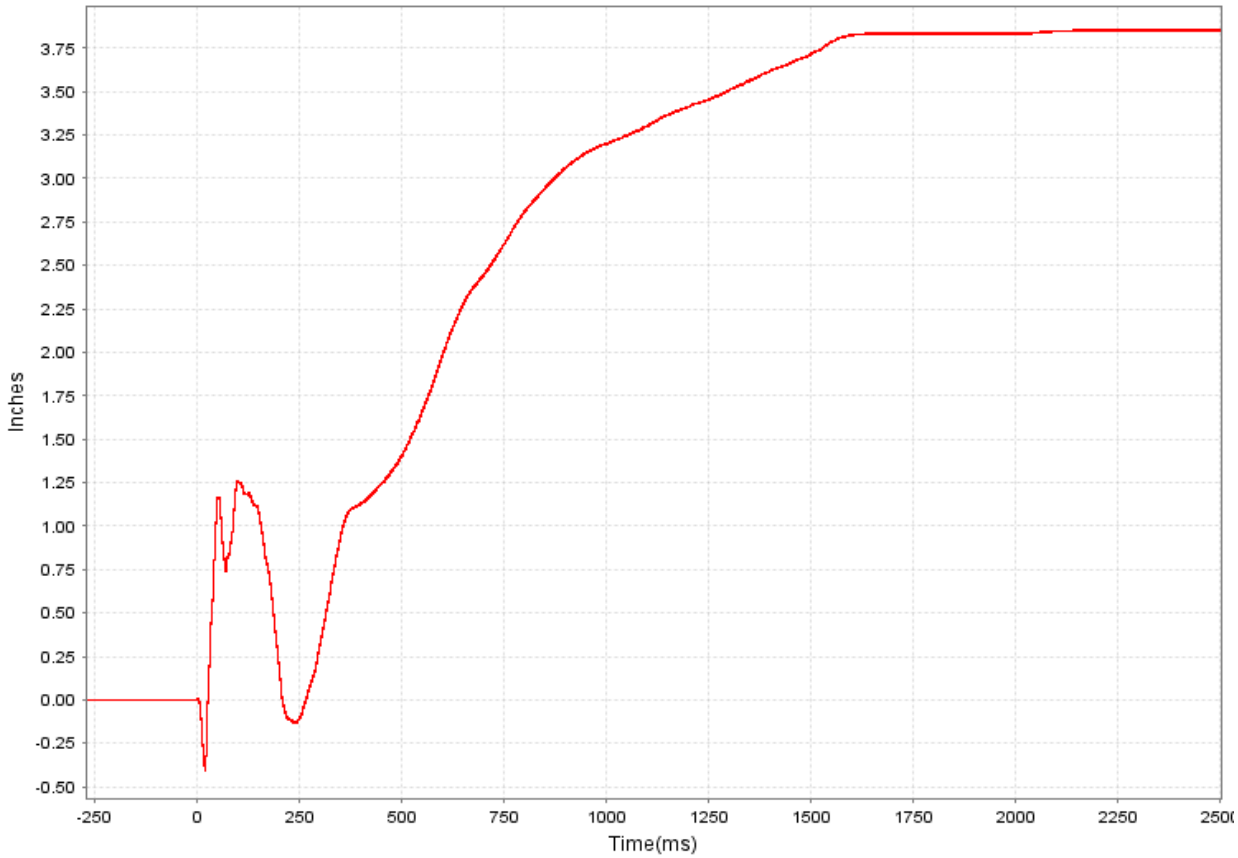

Figure 9. Output from a Celesco PT101 Series Cable Extension Transducer. The record shows motion of a hydraulically adjustable seat as the hydraulic system is breeched.

Downloaded from http://www.everyspec.com

APPENDIX D. EDDY CURRENT

1. The Eddy Current Sensor offers the tester the opportunity to record a travel versus time curve with millisecond resolution. Eddy Current is limited to approximately 50mm of displacement in commercially available systems. Eddy Current is mentioned here for informational purposes only.

Figure 10. Typical Eddy Current setup for the Kaman Model KD-2300. The sensor itself is mounted in the fixture to the left with cabling leading to an electronics module shown on right.

Measurement Range:	**50.8mm**
Sensitivity:	**100mV/mm**
Linearity:	**±1%**

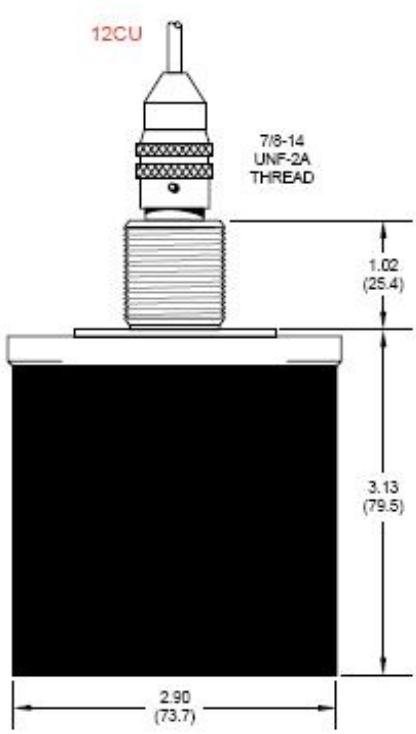

Figure 11. Kaman Eddy Current Sensor 12CU.

Downloaded from http://www.everyspec.com

Downloaded from http://www.everyspec.com

APPENDIX E. COMB GAGE

1. The Comb Gage provides a permanent record of the displacement experienced in a test event. The gage is limited in that an elastic component may be present that causes the perceived deformation to be less than that actually experienced in test.

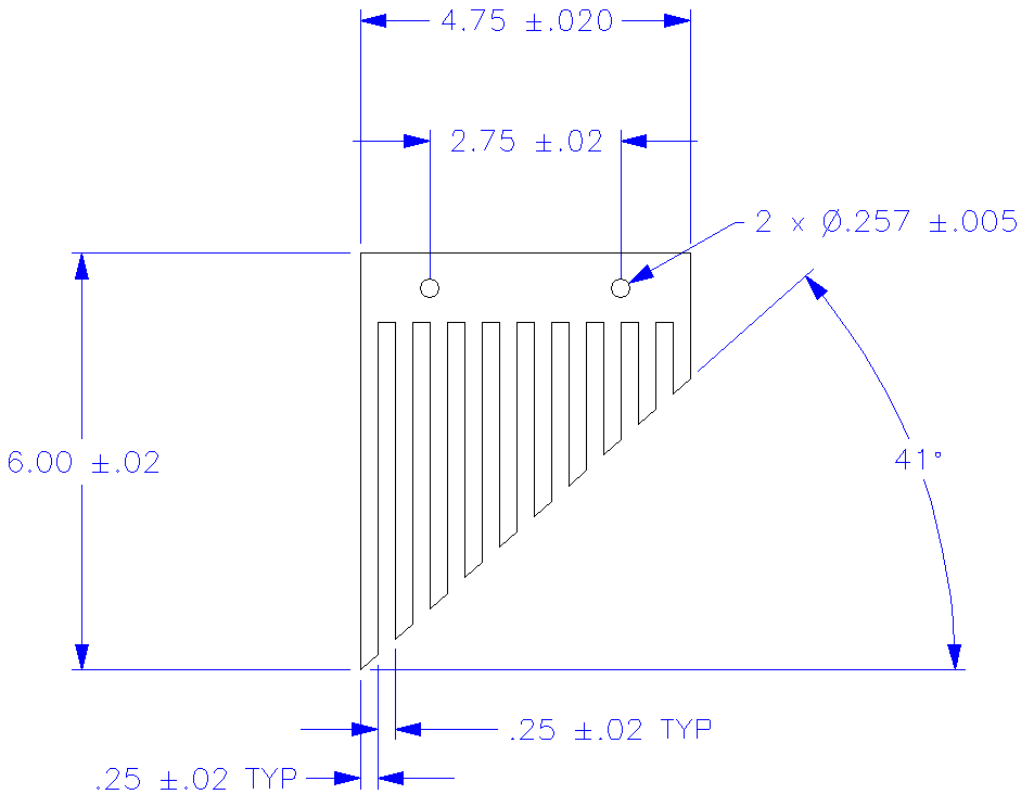

Figure 12. Comb Gage. The gage is made from thin gage mild steel, normalized or fully annealed to reduce springback.

Figure 13. Comb Gage suspended from a vehicle ceiling, used for measuring floor displacement during a ballistic event.

Downloaded from http://www.everyspec.com

Downloaded from http://www.everyspec.com

Forward comments, recommended changes, or any pertinent data which may be of use in improving this publication to the following address: Test Business Management Division (TEDT-TMB), US Army Developmental Test Command, 314 Longs Corner Road Aberdeen Proving Ground, MD 21005-5055. Technical information may be obtained from the preparing activity: Ballistics Instrumentation Division (TEDT-AT-SLB), US Army Aberdeen Test Center, 400 Colleran Road, Aberdeen Proving Ground, MD 21005-5055. Additional copies can be requested through the following website: http://itops.dtc.army.mil/RequestForDocuments.aspx, or through the Defense Technical Information Center, 8725 John J. Kingman Rd., STE 0944, Fort Belvoir, VA 22060-6218. This document is identified by the accession number (AD No.) printed on the first page.