Downloaded from http://www.everyspec.com

REPORT DOCUMENTATION PAGE

Form Approved
OMB No. 0704-0188

The public reporting burden for this collection of information is estimated to average 1 hour per response, including the time for reviewing instructions, searching existing data sources, gathering and maintaining the data needed, and completing and reviewing the collection of information. Send comments regarding this burden estimate or any other aspect of this collection of information, including suggestions for reducing this burden, to Department of Defense, Washington Headquarters Services, Directorate for information on Operations and Reports (0704-0188), 1215 Jefferson Davis Highway, Suite 1204, Arlington, VA 22202-4302. Respondents should be aware that notwithstanding any other provision of law, no person shall be subject to any penalty for failing to comply with a collection of information if it does not display a currently valid OMB control number.
PLEASE DO NOT RETURN YOUR FORM TO THE ABOVE ADDRESS.

1. REPORT DATE *(DD-MM-YYYY)*	2. REPORT TYPE	3. DATES COVERED *(From - To)*
7 January 2005	**FINAL**	

4. TITLE AND SUBTITLE	5a. CONTRACT NUMBER
Test Operations Procedure (TOP) **1-1-014 Ride Dynamics**	5b. GRANT NUMBER
	5c. PROGRAM ELEMENT NUMBER
6. AUTHORS	5d. PROJECT NUMBER
	5e. TASK NUMBER
	5f. WORK UNIT NUMBER

7. PERFORMING ORGANIZATION NAME(S) AND ADDRESS(ES)	8. PERFORMING ORGANIZATION REPORT NUMBER
Automotive Core (CSTE-DTC-AT-WC-F) US Army Aberdeen Test Center 400 Colleran Road Aberdeen Proving Ground, MD 21005-5059	**TOP 1-1-014**
9. SPONSORING/MONITORING AGENCY NAME(S) AND ADDRESS(ES)	10. SPONSOR/MONITOR'S ACRONYM(S)
Technology Management Division (CSTE-DTC-TT-M) US Army Development Test Command 314 Longs Corner Road Aberdeen Proving Ground, MD 21005-5055	11. SPONSOR/MONITOR'S REPORT NUMBER(S) Same as item 8

12. DISTRIBUTION/AVAILABILITY STATEMENT

Approved for public release, distribution unlimited.

13. SUPPLEMENTARY NOTES

Defense Technical Information Center (DTIC), AD No.: ADA431130

14. ABSTRACT

This TOP describes methods for evaluating the ride dynamics or ride quality of ground vehicles. Ride dynamics pertains to the sensation or feel of the passengers in the environment of a moving vehicle. The technique for evaluating the ride dynamics involves the use of instrumented seats or ride quality pads which contain accelerometers molded in a rubber disk to provide measurements in three mutually perpendicular axes. The instrumented seats are occupied by the normal vehicle crew. Ride dynamics data is acquired while the vehicle traverses various test courses at pre-determined speeds. The data is then processed by performing Fourier transformations and creating power spectral density (PSD) files for the individual test runs

15. SUBJECT TERMS

Absorbed Power	ISO 2631-1: 1997
Power Spectral Density	Ride Dynamics

16. SECURITY CLASSIFICATION OF:			17. LIMITATION OF ABSTRACT	18. NUMBER OF PAGES	19a. NAME OF RESPONSIBLE PERSON
a. REPORT	B. ABSTRACT	C. THIS PAGE			
Uncl	Uncl	Uncl	SAR	24	19b. TELEPHONE NUMBER *(include area code)*

Standard Form 298 (Rev. 8-98)
Prescribed by ANSI Std. Z39-18

20050407084

Downloaded from http://www.everyspec.com

US ARMY DEVELOPMENTAL TEST COMMAND
TEST OPERATIONS PROCEDURE

Test Operations Procedure (TOP) 1-1-014 — 7 January 2005
AD No.: ADA431130

RIDE DYNAMICS

Page

Paragraph

1.	SCOPE	1
2.	INSTRUMENTATION	2
2.1	Ride Quality Pad	2
2.2	Vibration Measurement Axes	3
2.3	Test Subject Anthropometry	3
2.4	Accelerometers and Signal Conditioning.	3
2.5	Acceleration Units.	4
2.6	Data Validation.	4
2.7	Length of Data Run	4
2.8	Vehicle	4
2.9	Vehicle Speed	4
2.10	Test Courses	4
3.	VIBRATION EVALUATION.	4
4.	ANALYSIS TECHNIQUES	5
4.1	ISO Technique	5
4.2	Absorbed Power Technique	10
4.3	Half-Round Obstacle Technique	11

Appendices

A	VEHICLE INFORMATION	A-1
B	ISO 2631-1: 1997 WEIGHTING FACTOR	B-1
C	ABSORBED POWER CONSTANTS	C-1
D	REFERENCES	D-1

1. SCOPE. This TOP describes methods for evaluating the ride dynamics or ride quality of ground vehicles. Ride dynamics pertains to the sensation or feel of the passengers in the environment of a moving vehicle. The technique for evaluating the ride dynamics involves the use of instrumented seats or ride quality pads which contain accelerometers molded in a rubber disk to provide measurements in three mutually perpendicular axes. The instrumented seats are occupied by the normal vehicle crew.

Approved for public release; distribution unlimited.

Downloaded from http://www.everyspec.com

Ride dynamics data is acquired while the vehicle traverses various test courses at pre-determined speeds. The data is then processed by performing Fourier transformations and creating power spectral density (PSD) files for the individual test runs. The ride dynamics analysis techniques are described in paragraph 4.

2. INSTRUMENTATION:

2.1 Ride Quality Pads. Vibration will be sensed by accelerometers mounted in ride quality pads which will be placed in designated vehicle seats. The ride quality pads are typically fabricated in-house and contain three uniaxial piezoresistive accelerometers (vertical, transverse and longitudinal) mounted in a rubber disk. The primary requirement of these pads is that they should not adversely affect occupant comfort and shall not significantly distort the buttock-cushion load distribution. These pads generally conform to the suggested design of SAE J1013, as shown in FIGURE 1. The semirigid disk is fabricated of molded rubber of approximately 80 to 90 durometer (A Scale).

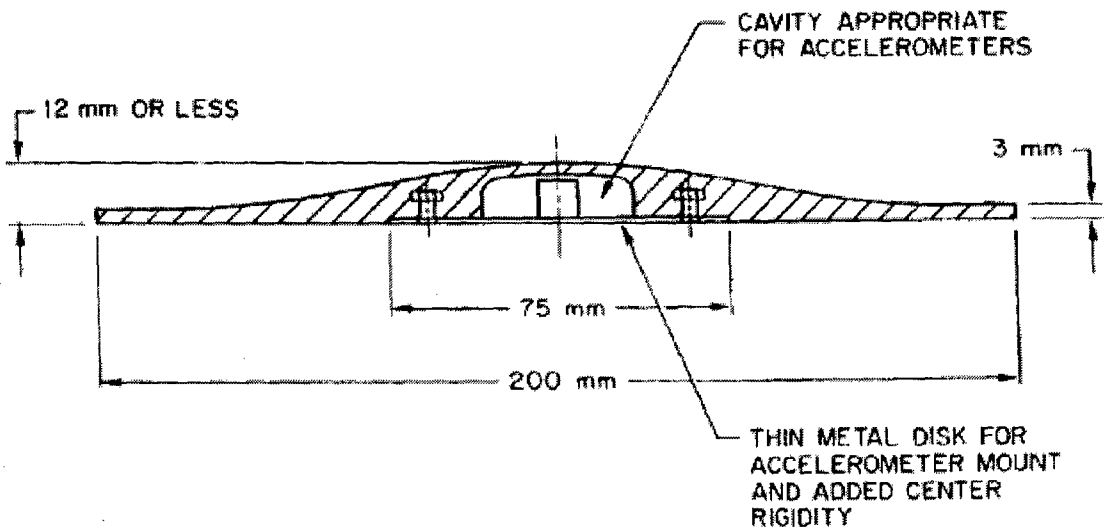

FIGURE 1. SUGGESTED DESIGN for RIDE QUALITY PAD.

Downloaded from http://www.everyspec.com

2.2 Vibration Measurement Axes. Vibrations are to be measured utilizing the seat pad mounted accelerometers in the vertical (z axis), fore/aft (x axis) and lateral (y axis) directions. The vibration measured along these three mutually perpendicular axes pass through a point on the interface between the seated crew member and the seat. This orientation is shown in FIGURE 2.

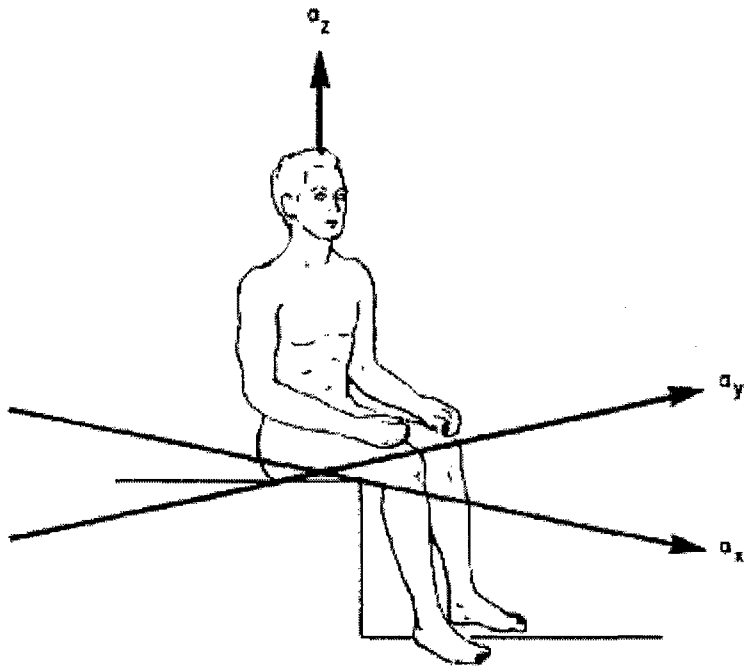

a_z, a_y, a_z = ACCELERATION IN THE DIRECTIONS OF THE x, y, z, AXIS
x—axis = DIRECTION OF THE BACK-TO-CHEST
y—axis = RIGHT-TO-LEFT SIDE
z—axis = BUTTOCKS-TO-HEAD

FIGURE 2. MEASUREMENT AXES

2.3 Test Subject Anthropometry and Seat Adjustment. Measurements will be made at the driver's seat and at other crew positions as required by the vehicle specification and/or the detailed test plan. The sex, height and weight of each occupant of the instrumented seats, as well as the seat location within the vehicle will be recorded. The seat, if adjustable, will be properly adjusted per manufacturer's specification. Subjects will maintain contact between the seat pad and buttocks at all times. Loss of contact during the test will require a retest for that condition. Other (non-instrumented) seats will be filled with an appropriate dummy load to simulate the weight of a crew member.

2.4 Accelerometers and Signal Conditioning. The pad accelerometers together with their associated signal conditioning shall be capable of measuring root-mean-square (rms) accelerations in the 0.4 to 100 Hz bandwidth. An on-board or telemetry data acquisition system

Downloaded from http://www.everyspec.com

will be used to acquire data while the vehicle is operated on the test courses. All data will be digitized at approximately 400 samples per second per channel after having been low-pass filtered at approximately 100 Hz. If a half-round obstacle requirement must be met, a vertical accelerometer will be installed at the base of the driver's seat to comply with historical data. Other locations (e.g., on the seat) may be instrumented as required by the vehicle specification and/or the detailed test plan. This (half-round obstacle) accelerometer will be low-pass filtered at 30 Hz. Amplifiers should be adjusted to provide an acceleration resolution of approximately 0.01 g. Analysis parameters should be chosen so that frequency domain resolution is 0.2 Hz or less.

2.5 Acceleration Units. Acceleration units for analysis will be meters/sec^2 for ISO-2631 computations, and ft/sec^2 for absorbed power computations.

2.6 Data Validation. Prior to analysis, data from each transducer and each data run will be checked for stationarity and for errors such as noise, amplifier drift, clipped data, etc. Procedures used for data validation will be presented in the test report.

2.7 Length of Data Run. The precision of acceleration spectral estimates is related to the length of the data run. Data should generally be recorded for a period of at least one minute unless restricted by test course length and vehicle speed.

2.8 Vehicle. The test vehicle will be described by recording the information in Appendix B.

2.9 Vehicle Speed. Vehicle speed will be recorded by an auxiliary, calibrated speed sensing system to an accuracy of $\pm$ 0.2 kph (0.1 mph). The test speed will be held constant (to the extent possible) at the target speed for the duration of the data run. The speed Coefficient of Variation (COV, standard deviation/mean) for each data run should be equal to or less than 0.10.

2.10 Test Courses. Test courses used for ride quality should have a wave number spectrum (power spectral density function of the instantaneous terrain vertical profile in the spatial domain) with a slope of approximately -2 in the log-log domain. The root mean square (rms) roughness value will be computed as the square root of the integral of the wave number spectrum and will be computed between wave numbers that cover the frequency range of interest (typically 0.5 to 80 Hz). The affected wave numbers are a function of vehicle speed (single wheel frequency), and integration band wave numbers between approximately 0.016 and 2.0 (wavelengths of 0.5 feet to 64 feet) will suffice for speeds up to 40 km/hr (25 mph). The lower integration band wave number should be reduced to 0.01 (wavelength of 100 feet) for speeds between 40 and 56 km/hr (25 and 35 mph).

3. VIBRATION EVALUATION. Vibration evaluation will be performed using two techniques; an ISO technique which deals with health effects of exposure to vibration, and an absorbed power technique which is used to describe speed limiting effects over rough terrain.

Downloaded from http://www.everyspec.com

The principal factors that combine to determine the degree to which human exposure to whole body vibration will be acceptable is described in the ISO 2631-1:1997 Standard. Four possible effects of vibration include Degraded Health, Comfort, Perception and Motion Sickness. The frequency range of these effects are:

0.5 Hz to 80 Hz for Degraded Health, Comfort and Perception
0.1 Hz to 0.5 Hz for Motion Sickness.

Unless required by the test plan, only the issue of degraded health will be evaluated. This type of vibration is transmitted to the human body as a whole through the supporting surfaces of the buttocks, back and feet of a seated person in a moving wheeled or tracked vehicle. Vibration is measured according to the coordinate system originating at a point from which vibration enters the human body. The coordinate system for the alignment of the vibration transducers is shown in FIGURE 2. The three principal areas of contact for seated persons are: (1) the supporting seat surface, (2) the seat back and (3) the feet, but only the seat data is of interest for degraded health analysis. Seat data is also the basis for the absorbed power analysis. Vibration transmitted to the body through a non-rigid material like a seat cushion is measured with the transducer interposed between the person and the principal contact areas of the surface. This is achieved by mounting the transducers within a ride quality pad as described in FIGURE 1.

4. ANALYSIS TECHNIQUES:

4.1 ISO Technique: The basic evaluation method described in ISO 2631-1:1997 utilizes the weighted root-mean-square (rms) acceleration. The weighted rms acceleration is expressed in meters per second squared (m/s^2) for translational vibration and radians per second squared (rad/s^2) for rotational vibration. The weighted rms acceleration is calculated in accordance with the following equation or its equivalent in the frequency domain:

$$a_w = \left[\frac{1}{T} \int_0^T a_w^2(t)\,dt \right]^{1/2}$$

where: $a_w(t)$ is the weighted acceleration (translational or rotational) as a function of time (time history), in meters per second squared (m/s^2) or radians per second squared (rad/s^2), respectively.
T is the duration of the measurement, in seconds.

The crest factor may be used to investigate whether or not the basic evaluation method is suitable for describing the severity of the vibration in relation to its effects on human beings. The peak value is determined over the duration of the measurement, i.e. the time period T used for integration of the rms value. The crest factor does not necessarily indicate the severity of vibration. For vibration with crest factors below or equal to 9, the basic evaluation method outlined above is normally sufficient. In cases where the basic evaluation method may underestimate the effects of vibration (high crest factors, occasional shocks, transient vibration)

Downloaded from http://www.everyspec.com

an alternative technique should be utilized such as the running rms method or the fourth power vibration dose method.

The running rms method evaluation method takes into account occasional shocks and transient vibration by use of a short integration time constant, for example 1 second. The vibration magnitude is defined as a maximum transient vibration value (MTVV), given as the maximum in time of $a_w(t_o)$, defined by:

$$a_w(t_0) = \left\{ \frac{1}{\tau} \int_{t_0-\tau}^{t_0} [a_w(t)]^2 \, dt \right\}^{1/2}$$

where: $a_w(t)$ is the instantaneous frequency-weighted acceleration
τ is the integration time for running averaging
t is the time (integration variable)
t_0 is the time observation (instantaneous time)

The fourth power vibration dose method is more sensitive than the basic evaluation method by using the fourth power instead of the second power of the acceleration time history as the basis for averaging. The fourth power vibration dose value (VDV) in meters per second to the power 1.75 ($m/s^{1.75}$), or in radians per second to the power 1.75 ($rad/s^{1.75}$), is defined as:

$$VDV = \left\{ \int_0^T [a_w(t)]^4 \, dt \right\}^{1/4}$$

where: $a_w(t)$ is the instantaneous frequency-weighted acceleration
T is the duration of measurement

The frequency weighting curves used for various directions of measurement in the calculation of frequency-weighted acceleration for the seat surface as outlined in the ISO 2631-1:1997 standard are provided in Appendix B and FIGURE 3.

Downloaded from http://www.everyspec.com

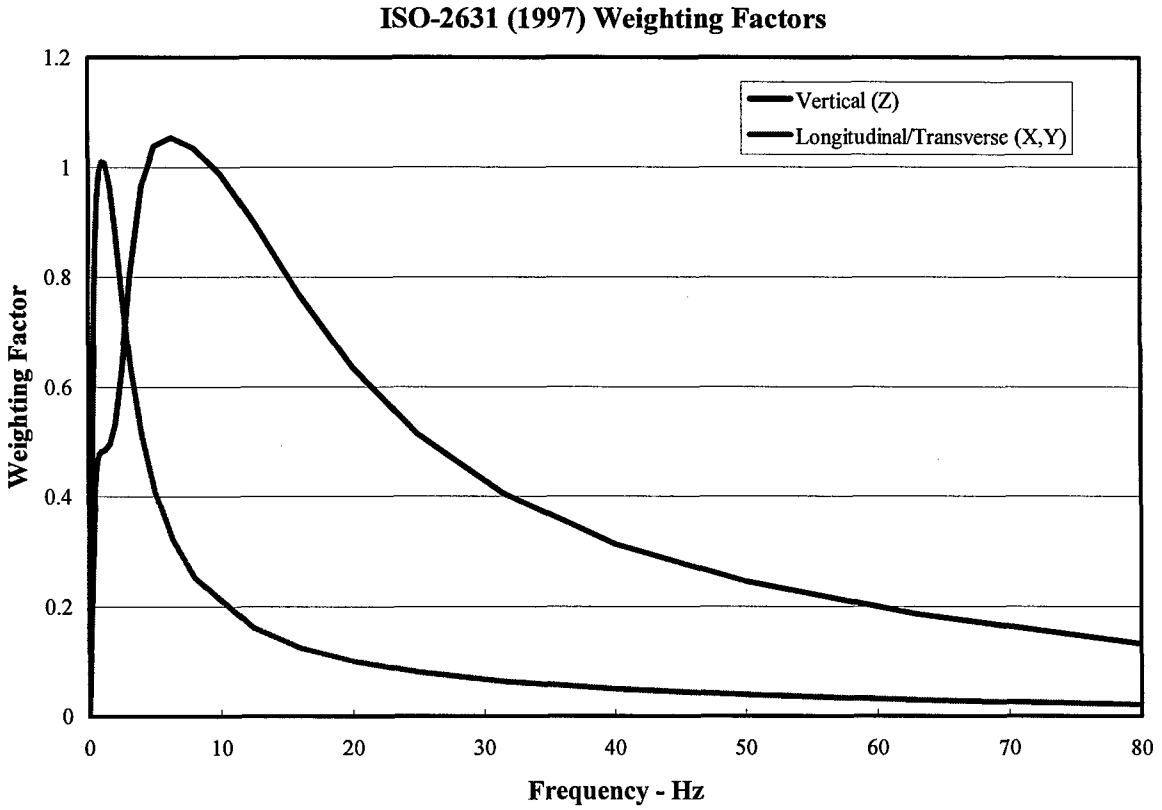

FIGURE 3. ISO 2631-1:1997 Frequency Weighting Factors

Daily vibration exposure limits are determined from the weighted acceleration, a_w, in each axis. The assessment is made independently for each axis, but the vector sum is used if the weighted accelerations from two or more axes are comparable. The evaluation is made using the frequency weighting factors shown in Appendix B with the multiplying factors as shown in Table 2.

Table 2. Multiplying Factors

Axis	Factor
X,Y	1.4
Z	1.0

Downloaded from http://www.everyspec.com

Exposure times for three conditions – no documented health risks, caution zone for health risks and health risks likely are calculated from the weighted acceleration as follows:

No documented health risks: Exposure time = $1.5/a_w^2$

Health risks likely: Exposure time = $6.0/a_w^2$

Caution zone for health risks: Exposure time > $1.5/a_w^2$ and < $6.0/a_w^2$

For example: let $a_w^2 = 2.0$ m/s^2

Exposure time = 0.4 hours for no documented health risks
Exposure time = 0.4 to 1.5 hours for a health risk caution
Exposure time = 1.5 hours for a likely health risk

Thus, an exposure (per 24 hours) to this level of vibration for less than 0.4 hours should produce no health risks, an exposure between 0.4 hours and 1.5 hours will result in a health risk caution, while an exposure of 1.5 hours or greater will create a likely health risk.

The health guidance caution zone is shown in Figure 4.

Downloaded from http://www.everyspec.com

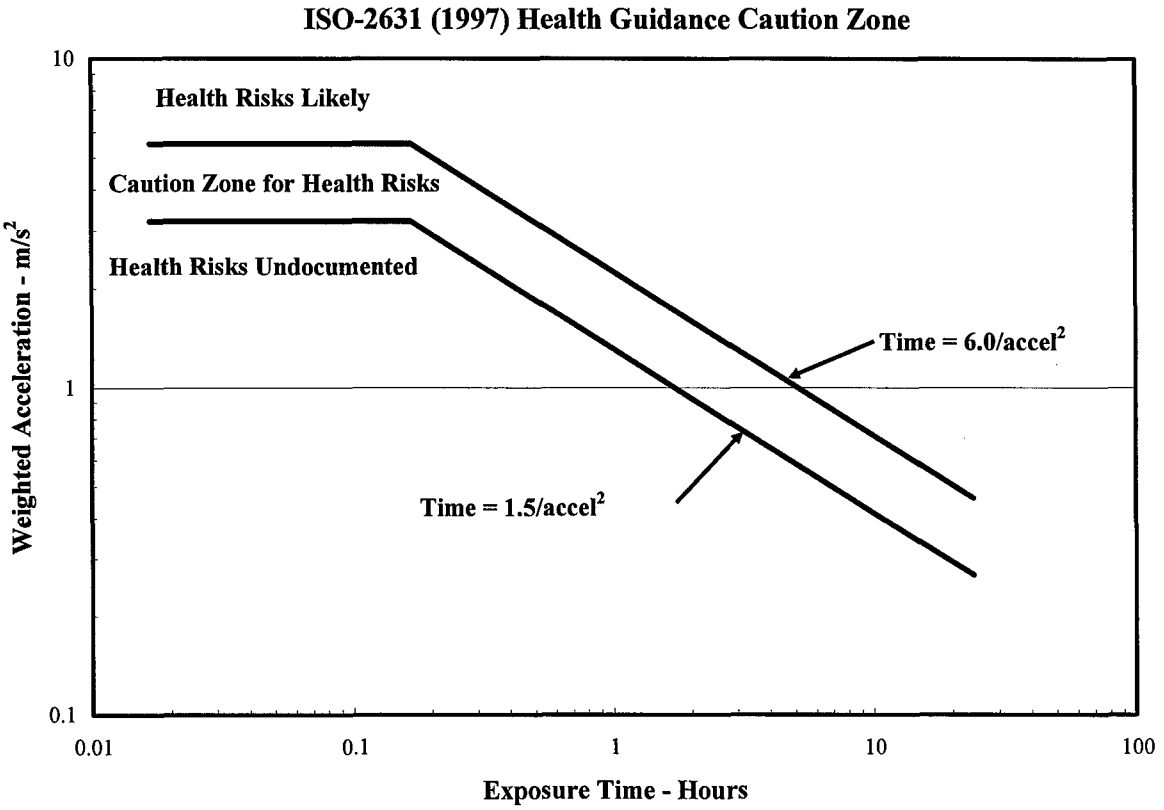

Figure 4. Health Guidance Caution Zone

Downloaded from http://www.everyspec.com

4.2 Absorbed Power Technique: Another technique for evaluating human response to vibration or ride quality is the computation of absorbed power. It is a measure of the rate at which energy is absorbed by a human subjected to ride vibration. It is accepted as a measure of human tolerance to vibration for military vehicles negotiating rough terrain. The absorbed power for a given location and axis is computed by multiplying the acceleration power spectral density spectrum by the appropriate transfer function and integrating the resultant spectrum. An advantage of this approach is that average absorbed power is a scalar quantity and can be summed in complex multi-degree of freedom systems to yield a single value describing the total average absorbed power. Typically a standard ride quality test procedure involves determining the speed at which the vertical average absorbed power reaches an upper limit of 6 watts for different types of terrain at selected crew location seats. The terrain is usually characterized by the surface roughness reported as inches or centimeters rms. The vehicle speed as a function of terrain roughness obtained from this process is used as one of the mobility limiting factors in the NATO Reference Mobility Model. Military vehicle specifications frequently include ride quality requirements based on absorbed power (e.g., the vehicle must be capable of producing a ride of 6 watts or less at the driver's seat in the vertical axis for a given speed and surface roughness.

The absorbed power in each axis will be calculated from:

$$P = \sum_{1}^{n} (C_i) A_i^2$$

where:
P = Absorbed power, watts

A_i = rms acceleration in ft/sec^2 within the ith spectral band

$C_i = K_1K_0(F_1F_4 - F_2F_3) / (F_3^2 + W_i^2F_4^2)$

Wi = Frequency, radians/second
F and K values = Calculated from Appendix C

The result is a frequency weighting, scaling and integration of the acceleration power spectral density. The weighting functions are shown (by axis) in Figure 5. The factors have been normalized to a value of 1.0 to show frequency without the appropriate scaling.

Downloaded from http://www.everyspec.com

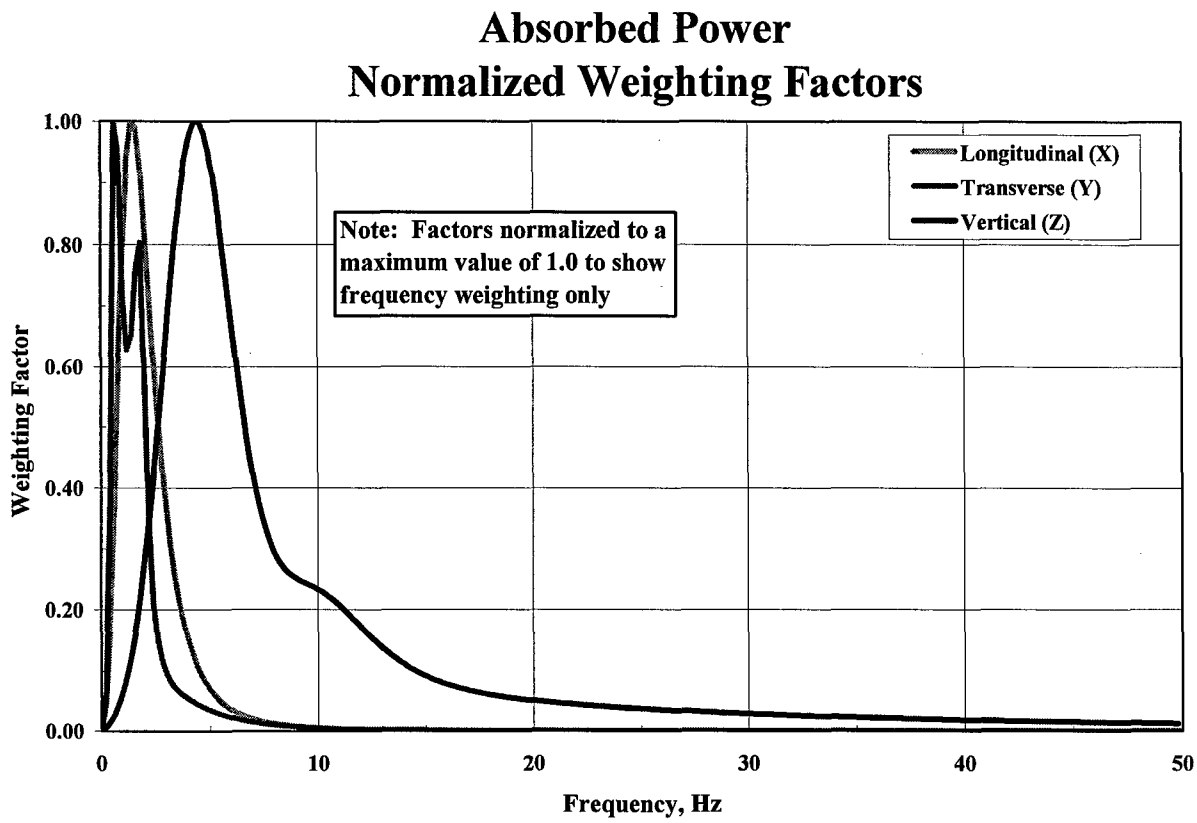

Figure 5. Absorbed Power Normalized Frequency Weighting Factors

For each test course, the absorbed power will be plotted as a function of speed. Specification requirements are generally written in terms of the driver's vertical absorbed power (only), but the following technique will be applied to other locations and axes, if applicable. A non-linear interpolation or a power law ($y = ax^b$, linear fit in a log-log domain,) or nth degree polynomial curve fit will be performed and the speed at which an absorbed power of 6 watts is achieved will be extrapolated from the data set. Absorbed power values of less than 1 watt or greater than 10 watts will not be used in the curve fit process, if possible. The 6-watt speed will then be plotted as a function of terrain roughness rms (a specific value for each test course) to determine a ride quality curve for the vehicle.

4.3 Half-Round Obstacle Technique. The peak acceleration from the vertical accelerometer near the driver's seat will be low-pass filtered at 30 Hz and the resulting peak acceleration will be plotted as a function of speed for each half-round obstacle. The speed at which a peak value of 2.5 g's is reached will be determined by a non-linear interpolation or curve fitting technique as described above.

Downloaded from http://www.everyspec.com

APPENDIX A. VEHICLE INFORMATION

Vehicle Model:

Year of Manufacture/Delivery:

Serial Number:

Odometer Reading:

Type Test Load:

Vehicle Weight as Tested:
- Total:
- Front Axle:
- Intermediate Axle:
- Rear Axle:

Tire Information:
- Front:
  - Manufacturer:
  - Size:
  - Type:
  - Pressure:
- Rear:
  - Manufacturer:
  - Size:
  - Type:
  - Pressure:

Seat Description:
- Driver:
- Passenger:

Seat Setting:
- Driver:
- Passenger:

Condition of the Vehicle:
- General Comments:

Downloaded from http://www.everyspec.com

APPENDIX B. ISO 2631-1:1997 WEIGHTING FACTORS

One-Third Octave Center Frequency, Hertz	Weighting Factors Longitudinal/Transverse (X,Y)	Vertical (Z)
0.4	0.713	0.352
0.5	0.853	0.418
0.63	0.944	0.459
0.8	0.992	0.477
1	1.011	0.482
1.25	1.008	0.484
1.6	0.968	0.494
2	0.89	0.531
2.5	0.776	0.631
3.15	0.642	0.804
4	0.512	0.967
5	0.409	1.039
6.3	0.323	1.054
8	0.253	1.036
10	0.212	0.988
12.5	0.161	0.902
16	0.125	0.768
20	0.1	0.636
25	0.08	0.513
31.5	0.0632	0.405
40	0.0494	0.314
50	0.0388	0.246
63	0.0295	0.186
80	0.0211	0.132

Downloaded from http://www.everyspec.com

APPENDIX C. ABSORBED POWER CONSTANTS

Longitudinal (X)

K_0	4.3532
K_1	1.356
W_i	$2\pi f_i$
F_1	1.0
F_2	0.219106
F_3	$-0.0185309W_i^2 + 1$
F_4	$-0.00061893W_i^2 + 0.219106$

Note: f_i = Center frequency (Hz) of ith spectral band

Transverse (Y)

K_0	4.353
K_1	1.356
W_i	$2\pi f_i$
F_1	$0.24052124\text{x}10^{-3}W_i^4 - 0.066974483\text{x}10^{-2}W_i^2 + 1$
F_2	$0.57384538\text{x}10^{-5}W_i^4 - 0.50170413\text{x}10^{-2}W_i^2 + 0.33092592$
F_3	$-0.14979958\text{x}10^{-5}Wi^6 + 0.0010088882W_i^4 - 0.10108617W_i^2 + 1$
F_4	$-0.1713749\text{x}10^{-7}W_i^6 + 0.53137351\text{x}10^{-4}W_i^4 - 0.011096507W_i^2 + 0.33092592$

Note: f_i = Center frequency (Hz) of ith spectral band

Downloaded from http://www.everyspec.com

Vertical (Z)

K_0	4.3537
K_1	1.356
W_i	$2\pi f_i$
F_1	$-0.10245\times10^{-9}W_i^6 + 0.17583\times10^{-5}W_i^4 - 0.44601\times10^{-2}W_i^2 + 1$
F_2	$0.12882\times10^{-7}W_i^4 - 0.93394\times10^{-4}W_i^2 + 0.10543$
F_3	$-0.45416\times10^{-9}Wi^6 + 0.37667\times10^{-5}W_i^4 - 0.56104\times10^{-2}W_i^2 + 1$
F_4	$-0.21179\times10^{-11}W_i^6 + 0.51728\times10^{-7}W_i^4 - 0.17947\times10^{-3}W_i^2 + 0.10543$

Downloaded from http://www.everyspec.com

APPENDIX D. REFERENCES

1. International Standard ISO 2631-1, Mechanical Vibration and Shock-Evaluation of Human Exposure to Whole-Body Vibration, 15 July 1997, Reference # 2631-1:1997(E).

2. Society of Automotive Engineers (SAE) 680091, "Analytical Analysis of Human Vibration," F. Pradko and R.A. Lee, 1968.

3. SAE J1013, Measurement of Whole Body Vibration of the Seated Operator of Off-Highway Work Machines, August 1992.

4. SAE J1490, Measurement and Presentation of Truck Ride Vibrations, September 1999.

5. Wong, J.Y. Theory of Ground Vehicles, John Wiley & Sons, 1993.

6. Bekker, M.G. Introduction to Terrain Vehicle Systems, The University of Michigan Press, 1969.

7. Fix, G.A., TARADCOM Signal Analysis Program, September 1978.

Downloaded from http://www.everyspec.com

Forward comments, recommended changes or any pertinent data which may be of use in improving this publication should be forwarded to the following address: Technology Management Division (CSTE-DTC-TT-M), US Army Developmental Test Command, 314 Longs Corner Road, Aberdeen Proving Ground, MD 21005-5055. Phone: (410) 278-1486, DSN 298-1486. Technical information may be obtained from the preparing activity: Test Technology Automotive Core (CSTE-DTC-AT-AC-I), US Army Aberdeen Test Center, 400 Colleran Road, Aberdeen Proving Ground, MD 21005-5059. Phone: (410) 278-9488, DSN: 298-9488. Additional copies are available from the Defense Technical Information Center, 8725 John J. Kingman Rd., STE 0944, Fort Belvoir, VA 22060-6218. This document is identified by the accession number (AD No.) printed on the first page.