Downloaded from http://www.everyspec.com

TECHNICAL MANUAL

AVIATION UNIT MAINTENANCE (AVUM) AND AVIATION INTERMEDIATE MAINTENANCE (AVIM) MANUAL

FOR

GENERAL AIRCRAFT MAINTENANCE

(HARDWARE AND CONSUMABLE MATERIALS)

VOLUME 6

*This manual together with TM 1-1500-204-23-1 through TM 1-1500-204-23-5 and TM 1-1500-204-23-7 through TM 1-1500-204-23-10, dated 31 July 1992, supersedes TM 55-1500-204-25/1, dated 6 April 1970, including all changes.

DISTRIBUTION STATEMENT A: Approved for public release; distribution is unlimited.

This copy is a reprint which includes current pages from Change 1.

HEADQUARTERS, DEPARTMENT OF THE ARMY
31 JULY 1992

Downloaded from http://www.everyspec.com

Downloaded from http://www.everyspec.com

PRECAUTIONARY DATA

Personnel performing instructions involving operations, procedures, and practices which are included or implied in this technical manual shall observe the following instructions. Disregard of these warnings and precautionary information can cause serious injury, death, or an aborted mission.

WARNINGS, CAUTIONS, and NOTES are means of attracting attention to essential or critical information in a manual. Definitions are outlined as follows.

WARNING: An operating or maintenance procedure, practice, condition, statement, etc , which if not strictly observed, could result in injury to or death of personnel.

CAUTION: An operating or maintenance procedure, practice, condition, statement, etc., which, if not strictly observed, could result in damage to, or destruction of, equipment or loss of mission effectiveness or long term health hazards to personnel.

NOTE: An essential operating or maintenance procedure, condition, or statement, which must be highlighted

WARNING

ELECTRICAL TESTS

Electrical power up to 500 volts is used in testing the equipment. Exercise extreme caution during these tests.

ELECTRICAL EQUIPMENT

All switches and electrical equipment shall be of the enclosed explosion-proof type All metal apparatus shall be grounded to avoid the danger of igniting test fluid fumes or creating electrical shock.

USING SOLVENTS/PAINTS

Standard precautions such as fire prevention and adequate ventilation shall be exercised when using solvents or applying primer and coating.

Wear gloves or gauntlets when handling solvents as solvents may cause skin disorders.

Cements and solvents used to repair liferafts are flammable and shall be treated as such. Never smoke or permit any type of open flame near when using cements or solvents.

Dichloromethane (methylene chloride) vapor is heavier than air; adequate ventilation shall be provided for working personnel. Dlchloromethane (methylene chloride) is toxic when vapors are inhaled over an extended period of time.

Acrylic monomer and polymer base adhesive, MIL-A-8576, Type II, contains a volatile liquid which may prove toxic when vapors are inhaled over extended periods. Use only with adequate ventilation.

Observe fire precautions when using aliphatlc naphtha, Federal Specification TT-N-95.

Downloaded from http://www.everyspec.com

HANDLING PLASTICS

Wear gloves to protect hands while handling hot plastic Boiling water shall not be used for heating acrylate base plastics.

Provide adequate ventilation when working with Furane Plastics, Epocast H-991-A, Furane hardener 941, or equivalents as these materials are toxic.

LUBRICATING OIL

Lubricating oil, 1 MIL-L-7808 or MIL-L-23699, contains an additive which is poisonous and absorbed readily through the skin. Do not allow oil to remain on skin any longer than necessary.

FUEL

When servicing aircraft or support equipment, clean up spilled fuel with cotton mops or cotton rags. Wash off any fuel on hands, body or clothing.

HANDLING ACID

Wear protective clothing when mixing acid with water. Always pour acid into water, never water into acid.

MAGNESIUM ALLOY FIRE

Do not use water or any standard liquid or foam-type fire extinguishers on a magnesium alloy fire, as they may cause an explosion. Use dry sand or talcum powder, Federal Specification U-T-30.

REMOVING CORROSION

Take precautions to prevent possible dust explosions when removing corrosion from steel alloys. Use goggles or face shield when removing paint or corrosion with a wire brush or by the grinding method.

TIRES AND WHEELS

If it is necessary to approach a wheel with a hot brake, do so either from directly in front or directly behind the aircraft.

Use extreme caution when prying out foreign material imbedded in tire tread.

Do not use air bottles or booster pumps not designed for tire inflation

OXYGEN SYSTEM

Do not allow petroleum base products to come in contact with oxygen system components, as an explosion or fire may result.

Do not use masking tape to seal openings in oxygen regulators. Masking tape constitutes a safety hazard when used on either serviceable or repairable oxygen equipment.

Do not use drycleaning solvent, Federal Specification P-D-680, near oxygen storage or transfer systems; the combination of these two will form a highly explosive mixture.

Downloaded from http://www.everyspec.com

FIRE EXTINGUISHERS

Halon type fire extinguishers, Monobromotrifluoromethane (CF_3BR) and Bromochloromethane (CB) are odorless gasses. When used in confined areas, available oxygen for breathing may be depleted. Use supplied breathing air when using these gasses in enclosed spaces

HYDRAULIC FLUID

To avoid contamination, do not use previously opened cans of hydraulic fluid. Cans of hydraulic fluid can not be resealed. Immediately transfer unused hydraulic fluid to an approved airtight, pressure venting, stainless steel storage reservoir, an approved hydraulic servicing unit or a hydraulic test stand containing the same type hydraulic fluid. When opening can, clean top and use a clean, sharp, unplated intrument to prevent contamination. Can openers attached to the aircraft must be cleaned before using.

NOISE HAZARD

Noise levels reached during ground runup of Army aircraft are of a level that may cause permanent hearing loss. Maintenance personnel shall wear adequate hearing protection when working on aircraft with engines in operation

COMPRESSED AIR

Compressed air shall not be used for cleaning purposes except if reduced to less than 30 psi and then only with effective chip-guarding and personal protective equipment.

ENGINE OIL - TURBINE

To avoid contamination, do not use previously opened cans of engine oil. A new sealed can of fluid must be opened and used. When opening can, clean top and use a clean sharp, unplated instrument to prevent contamination.

MERCURY

A very small amount of mercury may produce hazardous vapors. Refer to TM 385-4, Safety Precautions for Maintenance of Electrical/Electronic Equipment, for safety precautions to use when handling mercury and for methods that are used to clean up mercury spillage.

PROPER USE OF PLATED TOOLS

Use only chrome plated steel or unplated steel tools for disassembly or reassembly procedures described in this manual. Use of cadmium or zinc plated tools is not permitted since these platings are prone to chipping and flaking. Should these chips or flakes become embedded in aircraft parts galvanic corrosion will result. Should these chips or flakes enter fuel or oil wetted components they may eventually clog the filter or produce intergranular attack of nickel or titanium base alloys at elevated temperature. All tools regardless of type plating should be serviceable and free of chipping.

Downloaded from http://www.everyspec.com

Downloaded from http://www.everyspec.com

URGENT

TM 1-1500-204-23-6
C4

CHANGE

NO. 4

HEADQUARTERS
DEPARTMENT OF THE ARMY
WASHINGTON, DC., 20 August 2004

TECHNICAL MANUAL
AVIATION UNIT MAINTENANCE (AVUM)
AND AVIATION INTERMEDIATE
MAINTENANCE (AVIM) MANUAL
FOR
GENERAL AIRCRAFT MAINTENANCE

(HARDWARE AND CONSUMABLE MATERIALS)

Volume 6

DISTRIBUTION STATEMENT A: Approved for public release; distribution is unlimited.

TM 1-1500-204-23-6, 31 July 1992, is changed as follows:

1. Remove and insert pages as indicated below. New or changed text material is indicated by a vertical bar in the margin. An illustration change is indicated by a miniature pointing hand.

Remove Pages	Insert Pages
A/(B blank)	A/(B blank)
7-19 and 7-20	7-19 and 7-20
7-143 and 7-144	7-143 and 7-144
7-147 through 7-152	7-147 through 7-152
7-155 and 7-156	7-155 and 7-156
7-159 and 7-160	7-159 and 7-160
7-175/(7-176 blank)	7-175/(7-176 blank)

2. Retain this sheet in front of manual for reference purposes.

Downloaded from http://www.everyspec.com

By Order of the Secretary of the Army:

Official:

PETER J. SCHOOMAKER
General, United States Army
Chief of Staff

JOEL B. HUDSON
Administration Assistant to the
Secretary of the Army
0422217

DISTRIBUTION: To be distributed in accordance with Initial Distribution No. (IDN) 313302, requirements for TM 1-1500-204-23-6.

Downloaded from http://www.everyspec.com

CHANGE

NO. 3

HEADQUARTERS
DEPARTMENT OF THE ARMY
WASHINGTON, DC., 12 April 2004

TECHNICAL MANUAL
AVIATION UNIT MAINTENANCE (AVUM) AND AVIATION INTERMEDIATE MAINTENANCE (AVIM) MANUAL FOR GENERAL AIRCRAFT MAINTENANCE

(HARDWARE AND CONSUMABLE MATERIALS)

Volume 6

DISTRIBUTION STATEMENT A: Approved for public release; distribution is unlimited.

TM 1-1500-204-23-6, 31 July 1992, is changed as follows:

1. Remove and insert pages as indicated below. New or changed text material is indicated by a vertical bar in the margin. An illustration change is indicated by a miniature pointing hand.

Remove Pages	Insert Pages
c/(d blank)	c/(d blank)
	A/(B blank)
i/(ii blank)	i/(ii blank)
2-25 and 2-26	2-25 and 2-26
2-53 and 2-54	2-53 and 2-54
2-81 and 2-82	2-81 and 2-82
2-85 and 2-86	2-85 and 2-86
7-33 and 7-34	7-33 and 7-34
7-105 and 7-106	7-105 and 7-106
7-125 and 7-126	7-125 and 7-126

2. Retain this sheet in front of manual for reference purposes.

Downloaded from http://www.everyspec.com

By Order of the Secretary of the Army:

Official:

PETER J. SCHOOMAKER
General, United States Army
Chief of Staff

JOEL B. HUDSON
Administration Assistant to the
Secretary of the Army
0402104

DISTRIBUTION: To be distributed in accordance with Initial Distribution No. (IDN) 313302, requirements for TM 1-1500-204-23-6.

Downloaded from http://www.everyspec.com

CHANGE

NO. 2

HEADQUARTERS
DEPARTMENT OF THE ARMY
WASHINGTON, D.C., 7 FEBRUARY 1997

TECHNICAL MANUAL
AVIATION UNIT MAINTENANCE (AVUM)
AND AVIATION INTERMEDIATE
MAINTENANCE (AVIM) MANUAL
FOR
GENERAL AIRCRAFT MAINTENANCE

(HARDWARE AND CONSUMABLE MATERIALS)

VOLUME 6

DISTRIBUTION STATEMENT A: Approved for public release; distribution is unlimited.

TM 1-1500-204-23-6, 31 July 1992, is changed as follows:

1. Remove and insert pages as indicated below. New or changed text material is indicated by a vertical bar in the margin. An illustration change is indicated by a miniature pointing hand.

Remove pages	Insert pages
i/ii blank	i/ii blank
1-1/(1-2 blank)	1-1/(1-2 blank)
2-83 and 2-84	2-83 through 2-92
Index 1 through Index 14	Index 1 through Index 14

2. Retain this sheet in front of manual for reference purposes.

Downloaded from http://www.everyspec.com

By Order of the Secretary of the Army:

DENNIS J. REIMER
General United States Army
Chief of Staff

Official:

JOEL B. HUDSON
Administrative Assistant to the
Secretary of the Army
03219

To be distributed in accordance with DA Form 12-31-E, block no. 3302, requirements for r TM 1-1500-204-23-6.

☆U.S. GOVERNMENT PRINTING OFFICE: 1996 - 710-115/40131

Downloaded from http://www.everyspec.com

CHANGE

NO. 1

HEADQUARTERS
DEPARTMENT OF THE ARMY
WASHINGTON, D.C., 29 OCTOBER 1993

AVIATION UNIT MAINTENANCE (AVUM)
AND AVIATION INTERMEDIATE MAINTENANCE (AVIM) MANUAL

FOR

General Aircraft Maintenance Manual
(Hardware and Consumable Materials)

DISTRIBUTION STATEMENT A: Approved for public release; distribution is unlimited.

TM 1-1500-204-23-6, 31 July 1992, is changed as follows:

1. Remove and insert pages as indicated below. New or changed text material is indicated by a vertical bar in the margin. An illustration change is indicated by a miniature pointing hand.

Remove pages	Insert pages
i/(ii blank)	i/(ii blank)
2-17 and 2-18	2-17 and 2-18
----------	2-18.1 and 2-18.2
2-19 and 2-20	2-19 and 2-20
2-25 and 2-26	2-25 and 2-26
Index 1 through Index 8	Index 1 through Index 8
Index 11 and Index 12	Index 11 and Index 12

2. Retain this sheet in front of manual for reference purposes.

By Order of the Secretary of the Army.

GORDON R. SULLIVAN
General, United States Army
Chief of Staff

Official:

MILTON H. HAMILTON
Administrative Assistant to the
Secretary of the Army
05599

DISTRIBUTION:
To be distributed in accordance with DA Form 12-31-E, block no. 3302, requirements for TM 1-1500-204-23-6.

Downloaded from http://www.everyspec.com

Downloaded from http://www.everyspec.com

LIST OF EFFECTIVE PAGES

Insert latest changed pages; dispose of superseded pages in accordance with regulations.

NOTE: On a changed page, the portion of the text affected by the latest change is indicated by a vertical line, or other change symbol, in the outer margin of the page. Changes to illustrations are indicated by miniature pointing hands. Changes to wiring diagrams are indicated by shaded areas.

Dates of issue for original and changed pages are:

Original	0	31 July 1992
Change	1	29 October 1993
Change	2	7 February 1997
Change	3	12 April 2004
Change	4	20 August 2004

Page No.	*Change No.
Cover	0
a and b	0
c	3
d blank	0
A	4
B blank	3
i	3
ii blank	0
1–1	2
1–2 blank	0
2–1 – 2–17	0
2–18	1
2–18.1 and 2–18.2	1
2–19	0
2–20	1
2–21 – 2–24	0
2–25	3
2–26 – 2–52	0
2–53	3
2–54 – 2–80	0
2–81	3
2–82 and 2–83	0
2–84	2
2–85	3
2–86 – 2–92	2
3–1 – 3–8	0
4–1 – 4–27	0
4–28 blank	0
5–1 – 5–5	0
5–6 blank	0
6–1 – 6–7	0
6–8 blank	0
7–1 – 7–19	0
7–20	4
7–21 – 7–33	0
7–34	3
7–35 – 7–105	0
7–106	3
7–107 – 7–124	0
7–125	3
7–126 – 7–142	0
7–143	4
7–144 – 7–146	0
7–147	4
7–148 and 7–149	0
7–150 and 7–151	4
7–152 – 7–155	0
7–156	4
7–157 – 7–159	0
7–160	4
7–161 – 7–174	0
7–175	4
7–176 blank	0
A–1	0
A–2 blank	0
Glossary 1	0
Glossary 2 blank	0
Index 1 – Index 14	2

*Zero in this column indicated an original page.

Downloaded from http://www.everyspec.com

Downloaded from http://www.everyspec.com

TECHNICAL MANUAL

NO. 1-1500-204-23-6

HEADQUARTERS
DEPARTMENT OF THE ARMY
WASHINGTON, D.C., 31 July 1992

Technical Manual
Aviation Unit Maintenance (AVUM) and Aviation Intermediate Maintenance (AVIM) Manual for General Aircraft Maintenance (Hardware and Consumable Materials) Volume 6

REPORTING ERRORS AND RECOMMENDING IMPROVEMENTS

You can help improve this manual. If you find any mistakes, or if you know of a way to improve these procedures, please let us know. Mail your letter or DA Form 2028 (Recommended Changes to Publications and Blank Forms), located in the back of this manual directly to: Commander, US Army Aviation and Missile Command, ATTN: AMSAM-MMC-MA-NP, Redstone Arsenal, AL. 35898-6546. A reply will be furnished to you. You may also provide DA Form 2028 information to AMCOM via e-mail, fax, or the World Wide Web. Our fax number is: DSN 788-6546 or Commercial 256-842-6546. Our e-mail address is: 2028@redstone.army.mil. Instructions for sending an electronic 2028 may be found at the back of this manual immediately preceding the hard copy 2028. For the World Wide Web use: https://amcom2028.redstone.army.mil.

DISTRIBUTION STATEMENT A: Approved for public release; distribution is unlimited

TABLE OF CONTENTS

		Page
CHAPTER 1	INTRODUCTION	1-1
CHAPTER 2	HARDWARE	2-1
CHAPTER 3	RUBBER MATERIALS	3-1
CHAPTER 4	METALS	4-1
CHAPTER 5	PHENOLIC AND PLASTIC MATERIALS	5-1
CHAPTER 6	ADHESIVES, SEALANTS, AND CEMENTS	6-1
CHAPTER 7	CONSUMABLE MATERIALS	7-1
APPENDIX A	REFERENCES	A-1
GLOSSARY		Glossary 1

Downloaded from http://www.everyspec.com

Downloaded from http://www.everyspec.com

CHAPTER 1

INTRODUCTION

1-1. Purpose. This volume provides general information pertaining to the use and identification of hardware and materials. The application of hardware and materials on specific aircraft is not covered in the volume. Specific aircraft application, usage, and substitution is found in the individual aircraft maintenance manual. This volume is of maximum benefit to the mechanic who desires information about bolts, nuts, rivets, clamps, fittings, plate nuts, torque values, lockwire techniques, cotter pins, safety pins, Hi-Shear rivets, etc. This volume furnishes the mechanic with information about how to perform various mechanical functions which are used on all aircraft. This volume is not a requisitioning authority, and applicable repair part and special tool lists should be consulted to obtain the unit of issue and National Stock Number of the items required for maintenance.

1-2. Scope. General information to guide aircraft maintenance personnel is covered within this volume; however, no attempt has been made to include special parts or equipment which are applicable only to individual or special aircraft. Aircraft hardware, their types, characteristics, and uses are presented in Chapter 2. Materials used in ground servicing and airframe maintenance, including rubber materials, metals, phenolic and plastic materials, adhesives, sealants, and cements, are contained in Chapters 3 through 6.

1-3. Authority for Substitution and Interchangeability of Material (Air Items). Substitution or interchange of items of material for maintenance of Department of the Army aircraft will not be authorized, nor will orders be issued for shipment, unless substitution or interchangeability has been authorized by the U.S. Army Aviation and Troop Command (ATCOM) through one of the following methods:

- Incorporation of substitution or interchangeability data in supply manuals, repair parts appendices, or technical directives.
- Interim information in the form of individual replies to specific problems.

1-4. Responsibilities of Maintenance Activities.

Department of the Army activities engaged in maintenance will:

- Utilize substitute or interchangeable items only when authorized by one of the methods outlined in paragraph 1-3.
- Ensure that maintenance contracts for Department of the Army aircraft provide that material furnished by the contractor meet the substitution and interchangeability standards outlined in paragraph 1-3.
- Refer to ATCOM problems concerning interchangeability or substitution of parts, equipment, or material not covered in paragraph 1-3.

1-5. Responsibilities of ATCOM. ATCOM will:

- Ensure that necessary substitution and interchangeability information is published in supply manuals, repair part and special tool lists, and technical directives applicable to specific Army aircraft.
- Investigate and correlate information on substitution or interchangeability of components, assemblies, subassemblies, and detailed parts to be utilized in support of equipment.
- Determine and authorize substitution of raw materials or stock, such as metal sheets, rods, bars, chemicals, lubricants, etc., for use in repair of Department of the Army aircraft either by Department of the Army activities or commercial contractor.

1-6. Recommended Changes to Department of the Army Publications. Receipts of substitute items that have not been approved as outlined in paragraph 1-3 to be utilized for maintenance of Department of the Army aircraft will be reported on Department of the Army Form 2028.

1-7. Consumable Materials. Refer to Chapter 7 for consumable materials listed in this volume.

Downloaded from http://www.everyspec.com

Downloaded from http://www.everyspec.com

CHAPTER 2

HARDWARE

2-1. General. This technical manual provides general information, and is intended to be used as a guide rather than for specific applications. The technical manuals for each type aircraft provide specific instructions for the use and application of hardware and consumable materials. There is no document published that provides data on substitution of hardware. Substitution of hardware is only authorized by engineering changes for improvement and effectiveness of efficient application and operation of a given segment of equipment. There is no general interchangeability of items listed in Air Force Navy Aeronautical Standards (AN), Military Standards (MS), and National Aerospace Standards (NAS), since each item listed is engineered to a specific standard. The trend is to gradually replace the AN standards with the MS standards as the MS standards are accepted by all segments of the Armed Forces. When the change occurs, the AN standards become obsolete and are deleted from the military supply system. NAS has been established to provide hardware for specific applications requiring exacting tolerances, finishes, and strengths. These items are applied to military aircraft where engineering decisions dictate their use in lieu of AN and MS hardware. Replacement of NAS items is made in those areas where engineering and design activities decide that the same function can be performed by the replacing part without sacrificing quality on a specific item of equipment.

2-2. Bolts. Most aircraft structural bolts are either general purpose hexagon head bolts, internal wrenching bolts, or close tolerance bolts. Aircraft manufacturers are sometimes compelled to make bolts of different dimensions or higher strength than the standard types. Since these bolts are made for a particular application, it is extremely important that like bolts be used for replacement. When such bolts are not available, and it is necessary to fabricate them locally, care should be taken to use identical material and heat treatment specified in the applicable drawings or an authorized substitute material properly heat-treated. These special bolts are identified by the letter S stamped on the head.

a. Grip Length. As a general rule, bolt grip lengths should be kept equal to material thickness. The threads should neither bear on the material, nor should the shank protrude. Certain variations are allowed as this is not always possible. Bolts of slightly greater grip length than that required may be used provided washers are placed under nut or bolt head. Where plate nuts are used, add shims under the plate. Aluminum alloy washers should be used, except in cases of high torque values, with steel bolts in duralumin parts for prevention of corrosion. Steel washers should be used with steel bolts on steel parts.

NOTE

Steel bolts and aluminum alloy washers should be installed while still wet with, MIL- P-23377 epoxy polyamide primer.

b. Installation and End Description. Whenever possible, bolts should be installed with the bolt head up, outboard or forward to prevent the bolt from falling out, should the nut come loose. On rotating controls, heads should be installed in the direction of rotation, except where interference occurs. The shape of the bolt ends varies as shown in figure 2-1. Bolts A and B show varied chamfer angles, bolt C shows a flat end, and bolt D a round or pointed end.

c. Locking or Safetying. All bolts should be suitably locked or safetied in accordance with the method used in original fabrication of the aircraft. Approved methods of safetying are specified in paragraph 2-17

d Bolt Head Identification. Bolts are designed and fabricated of different materials and with different tensile strengths for their individual heat ranges and grip stresses. Each bolt is marked with a code for identification and physical characteristics. See table 2-1 for these code markings.

Downloaded from http://www.everyspec.com

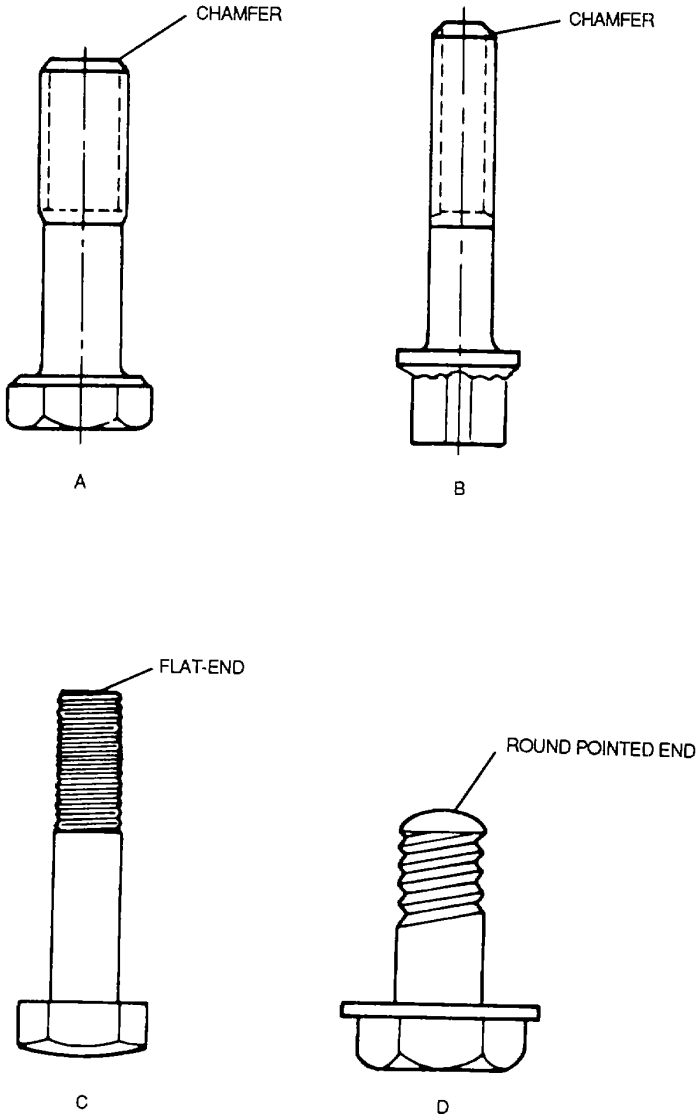

Figure 2-1. Bolt-End Description

Downloaded from http://www.everyspec.com

Table 2-1. Bolt and Screw Markings

	Marking	Material	Physical characteristics	Classification or specification
1		Low or Medium Carbon Steel	TS: 60,000 psi min 1/4 thru 1 1/2 inch RH: B70-100	
2		Low Carbon Steel	TS 60,000 psi min 1/4thru 4 dia RH: B69-B100	ASTM-A307
3		Low or Medium Carbon Steel	TS: 74,000 psi min 1/4 thru 3/4 inch dia RH: B80-100 TS: 60,000 psi min over 3/4 thru 1-1/2 inch dia RH: B70-700	SAE J429 Grade 2
4	3 Radial dashes, lines 120° apart	Medium Carbon Steel, Quenched and Tempered	TS: 120,000 psi min 1/4 thru 1 inch dia RH: C25-34 TS: 105,000 psi min over 1 thru 1-1/2 inch dia RH: C19-30	SAE J429, Grade 5 or ASTM-A499 Type 1
5	3 Radial lines 1200 apart	Carbon and Alloy Steel, Hardened and Tempered	TS: 120,000 psi min 1/4 thru 1 inch dia RH: C23-34 TS: 105,000 psi min over 1 thru 1-1/2 inch dia RB: B97-C34 TS: 90,000 psi min over 1-1/2 inch dia RH. B90 min	MIL-S-1222, Grade 5
6		Low Carbon Martensite Steel, Quenched and Tempered	TS: 120,000 psi min 1/4 thru 1 inch dia RH: C26-36 Reason: Updating per ANSI B18.2.1 Appendix 111	SAE J429, Grade 5 2
7	3 Radial lines optional 120° apart	Medium Carbon Steel, Quenched and Tempered	TS: 120,000 psi min 1/2 to 1 inch dia inclusive RH: C24-35	ASTM-A325, Type 1

Downloaded from http://www.everyspec.com

Table 2-1. Bolt and Screw Markings - CONT

	Marking	Material	Physical characteristics	Classification or specification
			TS: 105,000 psi min 1-1/8 to 1-1/2 inch dia inclusive RH: C19-31 Reason Updating per ANSI B18 2 1 Appendix 111	
8	3 Radial lines 60° apart	Low Carbon Martenste Steel, Quenched and Tempered	TS: 120,000 psi min 1/2 to 1 inch dia inclusive RH: C24-35 Reason. Updating per ANSI B18 2 1 Appendix 111	ASTM-A325, Type 2
9		Atmospheric Corrosion (Weathering) Steel, Quenched and Tempered	TS: 120,000 psi min 1/2 to 1 inch dia inclusive RH: C24-35 TS: 105,000 psi min 1-1/8 to 1-1/2 inch dia inclusive RH: C19-31 Reason: Updating per ANSI B18.2 1 Appendix 111	ASTM-A325, Type 3
10		Alloy Steel, Quenched and Tempered	TS- 125,000 psi min 1/4 to 2-1/2 inch dia RH: C2636 TS: 115,000 psi min over 2-1/2 inch dia RH C22-33 Reason Updating per ANSI B18 2 1 Appendix 111	AS1M-A354, Grade BC
11	5 Radial lines 72° apart	Medium Carbon Alloy Steel, Quenched and Tempered Roll Threaded After Heat Treatment	TS. 150,000 psi min 1/4 to 2-1/2 inch dia inclusive RH. C28-34 Reason Updating per ANSI B18 2 1 Appendix 111	SAE J429, Grade 7
12	6 Radial lines 60° apart	Medium Carbon Alloy Steel, Quenched and Tempered	TS: 150,000 psi min 1/4 to 2-1/2 inch dia inclusive RH: C32-38	MIL-S-1222, Grade 8

Downloaded from http://www.everyspec.com

Table 2-1. Bolt and Screw Markings - CONT

	Marking	Material	Physical characteristics	Classification or specification
			TS: 140,000 psi min over 2-1/2 inch dia RH. C30-38 Reason: Updating per ANSI B18 2 1 Appendix 111	
13	6 Radial lines 60° apart 	Alloy Steel, Quenched and Tempered	TS: 155,000 psi min 1/4 to 2-1/2 inch dia inclusive RH: C33-39 TS: 145,000 psi min over 2-1/2 to 4 inch dla inclusive RH: C31-39 Reason Updating per ANSI B18 2.1 Appendix 111	ASTM-A354, Grade BD
14		Low Carbon Martensite Steel, Quenched and Tempered	TS: 150,000 psi min 1/4 thru 1 inch dia RH: C33-39	SAE J429, Grade 8 2
15		Alloy Steel, Quenched and Tempered	TS: 150,000 psi min 1/2 to 1-1/2 inch dia inclusive RH: C33-38	ASTM-A490, Type 1
15a		Atmospheric Corrosion (Weathering) Steel, Quenched	TS: 150,000 psi min 1/2 to 1-1/2 inch dia inclusive C33-38	ASTM-A490 Type 3
16		Steel, alloy, medium carbon	RH: C26-32	AMS 6320
17	Was EL 	Steel, alloy, medium carbon	RH: C26-32 (For hexagon head bolts) RH: C32-36 (For socket head bolts)	AMS 6322
18		Steel, alloy, medium carbon	RH: C26-32	AMS 6322
19	Thread end 	Steel, alloy, medium medium carbon	RH: C32-36	MS 6322

Downloaded from http://www.everyspec.com

Table 2-1. Bolt and Screw Markings - CONT

	Marking	Material	Physical characteristics	Classification or specification
20	Single X	Steel, alloy, medium carbon (Cr, Ni, Mo)	TS: 125,000 psi min RH: C26-32	MIL-B-6812 includes- MIL-S-5626 for No 4140 MIL-S-6049 for No. 8740 MIL-S-6050 for No. 8630 MIL-S-6098 for No. 8735 MIL-S-6758 for No. 4130 MIL-S-6050 for No. 4037 AMS 6300
21		Steel, alloy, medium carbon (Cr, Ni, Mo)	TS: 125,000 psi min RH- C26-32 MIL-S - 6050/AMS 6030 (4037) not to be used over 1/2 inch dia	MIL-S-7839 includes. MIL-S-6049 for No. 8740 MIL-S-6050 for No. 8630 MIL-S-6098 for No. 8735 MIL-S-6758 for No. 4130 MIL-S-6050 for No. 4037 AMS 6300
22		Steel, 5 percent Chromium	TS: 100,000 psi min up to 4 inch dia inclusive TS: 95,000 psi min over 2-1/2 inch and up to 4-inch dia inclusive	AISI 501, grade B ASTM A193 ASTM A193
23		Steel, 12 percent chromium	TS: 125,000 psi min 1/4 inch and over dia for H condition RH: C25-34 TS: 180,000 psi min 1/4 inch and over dia for HT condition RH: C38-47	AISI 416, grade B6 MIL-S-1 222

Downloaded from http://www.everyspec.com

Table 2-1. Bolt and Screw Markings - CONT

	Marking	Material	Physical characteristics	Classification or specification
24		Steel, chromium molybdenum	TS: 125,000 psi man up to 2-1/2 inch dia inclusive TS: 115,000 psi min over 2-1/2 inch and up to 4-inch dia inclusive TS: 100,000 psi min over 4-inch and up to 7-inch dia inclusive	AISI 4140, 4142, and 4145, grade B7 ASTM A193
25		Steel, chromium high-molybdenum	TS: 100,000 psi min up to 2-1/2 inch dia and under TS: 115, 000 psi min over 2-1/2 inch and up to 4-inch dia inclusive	Grade B7M ASTM A193
27		Steel, chromium molybdenum vanadium	TS: 125,000 psi min up to 2-1/2 inch dia inclusive TS. 110,000 psi min over 2-1/2 inch and up to 4-inch dia inclusive TS: 100,000 psi min over 4-inch and up to 7-inch dia inclusive	Grade B16 ASTM A193
28	2 Radial dashes, 90 degrees apart	Steel, corrosion resistant	TS: 75,000 psi min 1/4 inch in dia and over RH: B95 max	MIL-S-1222
29	Single dash	Steel, corrosion-resistant (16Cr, 2NI)	TS 125,000 psi min RH C26-32 Don't temper MIL-S-18732 (431) in the range of 700°F to 1000°F because of poor impact resistance	MIL-B-6812 MIL-S-18732 (431) NAS 380 NAS 1347

Downloaded from http://www.everyspec.com

Table 2-1. Bolt and Screw Markings - CONT

	Marking	Material	Physical characteristics	Classification or specification
30	(Single dash) — or –_(2 staggered parallel dashes)	Steel, corrosion-resistant	TS: 75,000 psi min 1/4 inch and over dia RH: B95 max Annealed TS: 105,000 psi min 1/4 inch and over dia Cold Washed TS: 90,000 psi min over 3/4 inch dia	MIL-S-1222 NAS 380 NAS 1347
31	1	Steel, corrosion-resistant	TS: 70,000 psi min TS: 75,000 psi min	No 410, annealed QQ-S-763, Class 202, 300 series of stainless steel or (18-8)
32		Steel, corrosion-resistant (18Cr, 8NI)	Carbide solution treated TS: 75,000 psi min all dia Carbide solution treated TS: 75,000 psi min all dia Cold Drawn TS: 125,000 psi min up to 3/4-inch dia inclusive TS: 115,000 psi min over 3/4-inch and up to 1-inch dia inclusive TS: 105,000 psi min over 1-inch and up to 1-1/4 inch dia inclusive TS: 100,000 psi min over 1-1/4 inch dia inclusive	AISI 304, grade B8 ASTM A193 AISI 304, grade B8 ASTM A320 AISI 304, grade B8 (A320)

See footnote at end of table

Downloaded from http://www.everyspec.com

Table 2-1. Bolt and Screw Markings - CONT

	Marking	Material	Physical characteristics	Classification or specification
33	B8	Steel, corrosion-resistant (18Cr, 8Ni)	Carbide solution treated strain hardened TS: 125,000 psi min up to 3/4-inch dia inclusive TS: 115,000 psi min over 3/4-inch and up to 1-inch dia inclusive TS. 105,000 psi min over 1-inch and up to 1-1/4 inch dia inclusive TS: 100,000 psi min over 1-1/4 and up to 1-1/2 inch dia inclusive	AISI 304, grade B8 ASTM A193 ASTM A320
34	EC3	Steel, corrosion-resistant	TS: 125,000 psi min Up to 0 75 inch dia inclusive	AMS 7472 (17-20 Cr, 7 11 Ni) or AMS 5637, SAE 30302 (18Cr, 8NI)
35	B8C	Steel, corrosion-resistant (18Cr, 8NI, columbium stabilized)	Carbide solution treated in the finish condition TS: 75,000 psi min all dia Annealed TS: 75,000 psi min all dia Cold Drawn TS: 125,000 psi min up to 3/4-inch dia inclusive TS: 115,000 psi min over 3/4-inch and up to 1-inch dia inclusive TS 105,000 psi min over 1-inch and up to 1-1/4 inch dia inclusive TS. 100,000 psi min over 1-1/4 inch and up to 1-1/2 inch dia inclusive	AISI 1347, Grade B8C ASTM A193 ASTM A320 AISI 1347, grade B8C (A320)

Downloaded from http://www.everyspec.com

Table 2-1. Bolt and Screw Markings - CONT

Marking	Material	Physical characteristics	Classification or specification
36	Steel, corrosion-resistant (18Cr, 8Ni, columbium stabilized)	Carbide solution treated and strain hardened TS: 125,000 psi min up to 3/4-inch dia inclusive	AISI 1347, Grade B8C
		TS: 115,000 psi min over 3/4-inch and up to 1-inch dia inclusive	ASTM A193 ASTM A320
		TS: 105,000 psi min over 1-inch and up to 1-1/4 inch dia inclusive	
		TS: 100,000 psi min over 1-1/4 inch and up to 1-1/2 inch dia inclusive	
37	Steel, corrosion-resistant (16Cr, 18Ni),	Annealed condition: A TS: 75,000 psi min 1/4 to 1-1/2 inch dia inclusive RH: B65-95	
		Headed and rolled from annealed and then reannealed condition: AF TS: 85,000 psi max	
		TS: 115,000 psi min over 3/4-inch and up to 1-inch dia inclusive	
		TS: 105,000 psi min over 1-inch and up to 1-1/4 inch dia inclusive	
		TS 100,000 psi min over 1-1 /4 inch and up to 1-1/2 inch dia inclusive	
		Annealed TS: 75,000 psi min all dia	AISI 348, grade B8D (A:320)

Downloaded from http://www.everyspec.com

Table 2-1. Bolt and Screw Markings - CONT

	Marking	Material	Physical characteristics	Classification or specification
38	F593	Steel, corrosion resistant (16Cr, 18Ni)	Machined from strain hardened stock Condition SH TS: 120,000 psi min 1/4 to 5/8 inch dia inclusive RH C24-36	
			TS: 110,000 psi min 3/4 to 1 inch dia inclusive RH: C20-32	
			TS: 100,000 psi min 1-1/8 to 1-1/4 inch dia inclusive RH B95-C30	
			TS: 95,000 psi min 1-3/8 to 1-1/2 inch dia inclusive RH B90-C28	
39	B8T	Steel, corrosion-resistant (18Cr, 8Ni, columblum stabilized)	Carbide solution treated TS: 75,000 psi min all dia	AISI 321, Grade B8T ASTM A193
			Carbide solution treated in the finish condition TS: 75,000 psi min all dia	AISI 321, grade B8T ASTM A320
			Cold Drawn TS: 125,000 psi min up to 3/4-inch dia inclusive TS: 115,000 psi min over 3/4-inch and up to 1-inch dia inclusive	AISI 321, grade B8T (A320

Downloaded from http://www.everyspec.com

Table 2-1. Bolt and Screw Markings - CONT

Marking	Material	Physical characteristics	Classification or specification
39 – continued	Steel, corrosion-resistant (18Cr, 8NI, columbium stabilized)	TS: 105,000 psi min over 1-inch and up to 1-1/4 inch dia inclusive	
		TS: 100,000 psi min over 1-1/4 inch and up to 1-1/2 inch dia inclusive	
40 B8T	Steel, corrosion-resistant (18Cr, 8Ni, titanium stabilized)	Carbide solution treated and strain hardened TS: 125,000 psi min up to 3/4-inch dia inclusive	AISI 321, grade B8T ASTM A320
		TS: 115,000 psi min over 3/4-inch and up to 1-inch dia inclusive	
		TS: 105,000 psi min over 1-inch and up to 1-1/4 inch dia inclusive	
		TS: 100,000 psi min over 1-1/4 inch and up to 1-1/2 inch dia inclusive	
41 B8F	Steel, corrosion-resistant (18Cr, 8NI, free machining)	Carbide solution treated TS 75,000 psi min all dia	AISI 303, grade B8F ASTM A193
		Carbide solution treated in the finish condition TS: 75,000 psi min all dia	AISI 1303, grade B8F ASTM A320
		TS: 115,000 psi min over 3/4-inch and up to 1-inch dia inclusive	
		TS: 105,000 psi min over 1-inch and up to 1-1 /4 inch dia inclusive	
		TS 100,000 psi min over 1-1 /4 inch and up to 1-1/2 inch dia inclusive	

Downloaded from http://www.everyspec.com

Table 2-1. Bolt and Screw Markings - CONT

	Marking	Material	Physical characteristics	Classification or specification
42		Steel, corrosion-resistant (18Cr, 8NI, free machining)	Cold Drawn TS: 125,000 psi min up to 3/4-inch dia inclusive TS: 115,000 psi min over 3/4-inch and up to 1-inch dia inclusive TS: 105,000 psi min over 1-inch and up to 1-1/4 inch dia inclusive TS: 100,000 psi min over 1-1/4 inch and up to 1-1/2 inch dia inclusive	AISI 303, grade B8F ASTM A320
43		Steel, corrosion- and heat-resistant (15Cr, 26Ni,1 3Mo,1 9T1, 0 3V)	TS: 130,000 psi min BH- 248 to 341	AMS 5731 A286
44		Steel, corrosion- and heat-resistant	TS: 130,000 psi min up to 1-1/4 inch inclusive RH C27-37	MIL-B-7874, 1200°F
45		Steel, chromium molybdenum	TS: 125,000 psi mmn up to 2-1/2 inch dia inclusive TS: 105,000 psi min over 2-1/2 inch and up to 4-inch dia inclusive TS: 125,000 psi min 1/4 to 2-1/2 inch dia RH C25-34 TS: 115,000 psi min over 2-1/2 inch dia RH C22-34	AISI 4140, 4142, 4145 grade L7 ASTM A320 MIL-S-1222

Downloaded from http://www.everyspec.com

Table 2-1. Bolt and Screw Markings - CONT

	Marking	Material	Physical characteristics	Classification or specification
48		Steel, nickel chromium molybdenum	TS: 125,000 psi min up to 4-inch dia inclusive	AISI 4340, grade L43 ASTM A320
			TS: 125,000 psi min 1/4 inch to 2-1/2 inch dia RH C25-34	MIL-S-1222
			TS: 115,000 psi min over 2-1/2 inch dia RH. C22-34	
49		Alloy steel	125,000 to 145,000 psi	NAS380 NAS1347
50			Close tolerance Close tolerance shank and/or head	NAS380
51	Triangle with a dimple		Close tolerance shank and/or head, high strength 160,000 to 180,000 psi	NAS380
52	Triangle with an X inside	Alloy	Close tolerance shank and/or head, 125,000 to 145,000 psi	NAS380
53	R		Rolled threads after heat treatment	NAS380
54		Aluminum alloy	TS: 62,000 psi min	NAS380 MIL-13-6812 (AL-24)
		Aluminum alloy 2024 in T4 temper	TS: 62,000 psi min 1/4 inch dia and over	MIL-S-1222 (2024)
		Aluminum alloy 6061 in T6 temper	TS: 42,000 psi min 1/4 inch dia and over	MIL-S-1222 (6061)

Downloaded from http://www.everyspec.com

Table 2-1. Bolt and Screw Markings - CONT

	Marking	Material	Physical characteristics	Classification or specification
54	— continued	Aluminum alloy 7075 in T73 temper	TS: 68,000 psi min 1/4 inch dia and over	MIL-S-1222 (7075)
55		Bronze, commercial	TS: 85,000 psi min	NAS380
		Nickel aluminum, bronze	TS: 90,000 psi min 1/4 inch dia and over	MIL-S-1222, grade 632
56		Titanium alloy T-6AL-4V annealed condition	TS: 125,000 psi min 1/4 to 1-1/2 inch dia inclusive	MIL-S-1222 grade T7
			TS: 120,000 psi min over 1-1/2 to 2 inch dia inclusive	
			TS: 115,000 psi min over 2 inch dia	
		Titanium alloy Ti-AL-4V solution treated and aged	TS: 145,000 psi min 1/4 to 1 inch dia inclusive	
			TS: 135,000 psi min over 1 inch dia	

1 Marking for corrosion-resistant steel screws. Only one visible dash necessary after slotting operations. Position optional. No marking required on heads of sizes number 4 or smaller.

Downloaded from http://www.everyspec.com

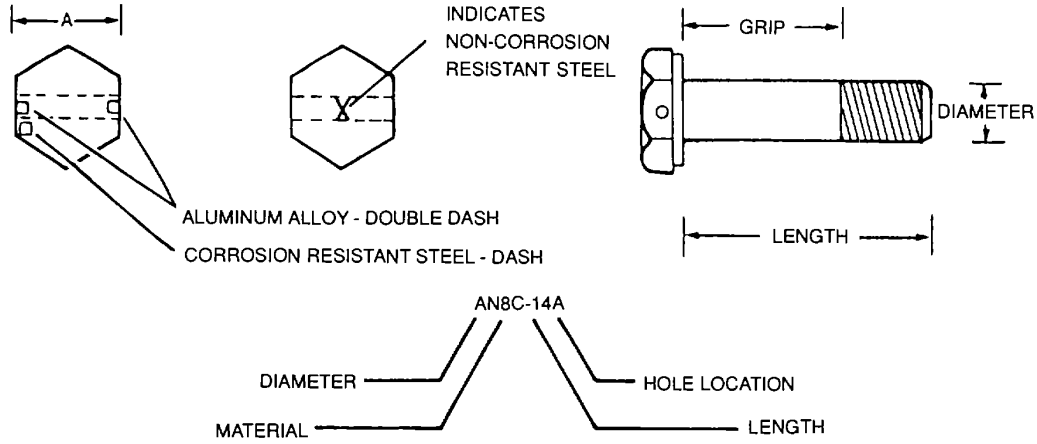

Figure 2-2. Hexagon Head Bolt Identification

e. *Hexagon Head Bolts*. The standard aircraft machine bolt (hexagon head) is an all-purpose structural bolt used for general applications involving tension and shear loads. Steel bolts smaller than number 10 and aluminum alloy bolts smaller than 1/4 inch are easily overstressed at assembly and are not used in primary structures.

(1) *Material*. Bolts are made of cadmium- or zinc-plated corrosion-resistant steel, corrosion-resistant steel, or anodized aluminum alloy.

(2) *AN bolt part number*. The AN bolt code designation indicates type of bolt, diameter, material, overall length, and if the head or shank is drilled. See figure 2-2 and refer to tables 2-2 through 2-5.

f. *Drilled Head Bolts*. Drilled head bolts, as shown in figure 2-3, differ from the standard hexagon head bolts. The drilled head bolt has a deeper head, which is drilled for securing with lockwire. Each face of the bolt head is drilled. Use discrimination when substituting drilled head bolts for hexagon head bolts. When drilled head bolts are used as capscrews, spring lockwashers may be used when specified

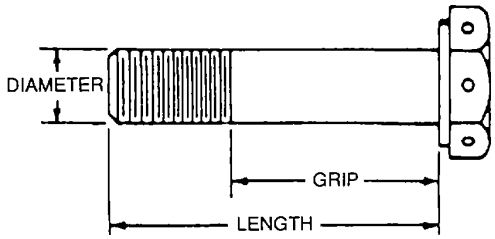

Figure 2-3. Drilled Head Bolt

g. *Close Tolerance Bolts*. Close tolerance, hexagon-head, and 100-degree countersunk bolts are used in aircraft fabrication where bolted joints are subject to severe load reversals and vibration The bolt shanks are made to close tolerance, permitting a very close fit with the use of reamers. Use such bolts to eliminate lost motion in control systems, etc. Hexagon head bolts are shown in figure 2-2,100-degree countersunk bolts are shown in figure 2-4. Use an internal hexagonal, Phillips or Frearson recess-type wrench for turning counter-sunk head bolts.

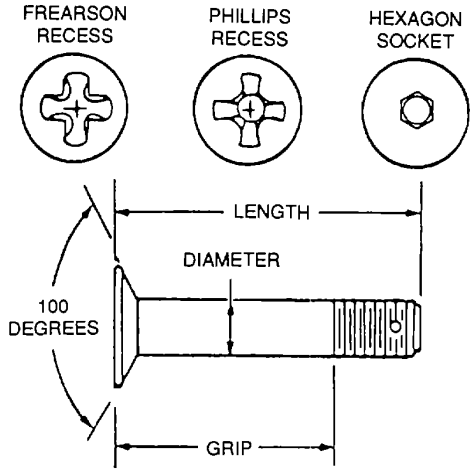

Figure 2-4. Countersunk Close Tolerance Bolt

Downloaded from http://www.everyspec.com

Table 2-2. Bolt Diameter by Part Number

Part No.	Dia.
AN3	3/16
AN4	1/4
AN5	5/16
AN6	3/8
AN7	7/16
AN8	1/2
AN9	9/16
AN10	5/8
AN12	3/4
AN14	7/8
AN16	1

Table 2-3. Bolt Material by Letter Preceding Dash Number

Code	Material
DD	Aluminum Alloy
C	Corrosion-Resistant Steel
No letter	Nickel Steel

Table 2-4. Hole Location by Letter

Location	Code
Undrilled Bolt	Add A after dash number
Drilled Shank Only	No letter required
Drilled Head Only	Add H before dash number and A after dash number
Drilled Head and Shank	Add H before dash number

Table 2-5. Bolt Length by Dash Number

Dash No.	
-3	3/8
-4	1/2
-5	5/8
-6	3/4
-7	7/8
-10	1
-11	1 1/8
-12	1 1/4
-13	1 3/8
-14	1 1/2
-15	1 5/8
-16	1 3/4
-17	1 7/8
-20	2
-21	2 1/8
-22	2 1/4

h. Internal Wrenching Bolts. Internal wrenching bolts, as shown in figure 2-5, are high strength steel bolts used primarily in tension applications. The bolt hole must be countersunk or a high tensile countersunk washer must be used to clear the large corner radius of the shank at the head and give adequate bearing area. Use a high tensile plain washer under nut if required. Do not substitute common aircraft bolts and washers for high tensile bolts and washers.

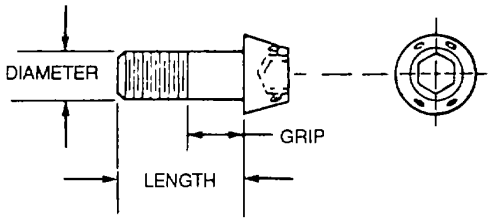

Figure 2-5. Internal Wrenching Bolt

Downloaded from http://www.everyspec.com

i. *External Wrenching Bolts*. External wrenching bolts (12 point), as shown in figure 2-6, are high-strength bolts used primarily in tension applications. They are furnished with either drilled or undrilled heads. The radius under the head of this bolt requires a high tensile countersunk washer (MS20002) to be used in conjunction with this bolt. Do not substitute a common aircraft bolt for a high tensile bolt.

j. *Self-Retaining Bolts*. Self-retaining bolts can be used on rotating controls as specified in the applicable aircraft maintenance manual. They are primarily intended for use in shear application at dynamic joint assemblies of aicraft where the failure of cotter pin or safety wire would effect safety of flight or endanger personnel. Self-retaining bolts are installed with boltheads facing the direction of rotation.

The two types of self-retaining bolts used are positive retention and impedance.

(1) Positive retention bolts (Figure 2-8A) have a pawl at threaded end of bolt shank. The pawl is spring loaded to an extended position. When extended, the pawl prevents the nut from being removed. Finger pressure compresses the pawl for removal of the nut and bolt from the part.

(2) Impedance bolts (Figure 2-8A) have either spring-loaded balls or a spring ring on the bolt shank above the threads. These retaining elements extend the diameter of the bolt and prevents it from sliding from the component.

k. *Clevis Bolts*. Clevis bolts, as shown in figure 2-7, are used in applications subject to shearing stress only. They are frequently used as mechanical pins in control systems. The head is round and slotted.

l. *Eye Bolts*. Eye bolts, as shown in figure 2-8, are used to carry external tension loads and for attachment of such devices as the clevis, cable shackle, or fork of a turnbuckle.

CAUTION

Self-locking bolts will not be reused in flight essential applications, such as flight and engine controls and single bolted structural joints which serve as a primary load path. Damage to components may otherwise result

m. *Self-Locking Bolts*. Self-locking bolts are used on aircraft to provide tight assemblies which will resist severe vibration conditions. The locking element is a nylon (or equivalent) pellet, as shown in figure 2-9, inserted in the threaded section of the bolt. The locking action of the pellet takes place at point of engagement of the screw or nut section. Except as stated in caution above, self-locking bolts are reusable since the nylon-locking element is not cut by the threads upon engagement but merely pressed into the threads. The threads of the bolts used shall show no distinction or scratches deep enough to reduce the efficiency of the threads. The threads of the bolts shall remain in a serviceable condition and shall permit freely there installation with fingers of a new nut up to the self-locking device.

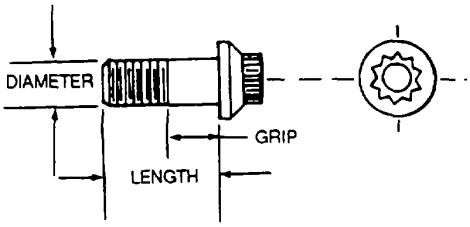

Figure 2-6. External Wrenching Bolt

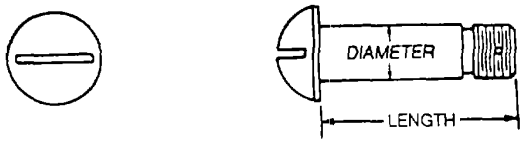

Figure 2-7. Clevis Bolt

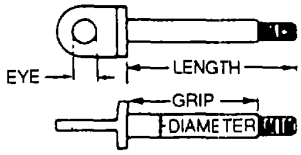

Figure 2-8. Eye Bolt

Downloaded from http://www.everyspec.com

n. *Tee-Head Bolts*. Tee-head bolts are used to close the joints on V-Band clamps. They must be seated correctly and torqued in accordance with the applicable maintenance manual. Check the threads for wear and condition. Replace tee-head bolt if there are signs of wear, galling, or deformation.

o. *Aluminum Bolts*. Aluminum bolts are used on aircraft in areas that are highly sensitive to magnetic field changes. They are corrosion-resistant, and are usually hex-head-shaped. Care should be taken when installing these bolts. Check for thread wear and replace in accordance with applicable maintenance manual.

p. *Jo-Bolts*. Jo-Bolts are high strength structural blind fasteners used in close tolerance holes where assembly does not allow installation of AN, NAS, or MS bolts or, in some cases, where the installation of Jo-Bolts may be required for weight saving advantages. However, Jo-Bolts are always considered to be a part of the permanent structure, and primarily subject to shear loads. The Jo-Bolt, installed as a unit consists of a bolt, nut, and sleeve. Jo-Bolts are identified by head type as descnbed in the following paragraphs. TM 1-1500-204-23-6

Downloaded from http://www.everyspec.com

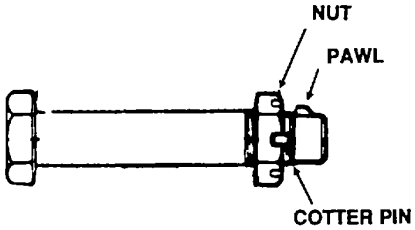

POSITIVE RETENTION BOLT

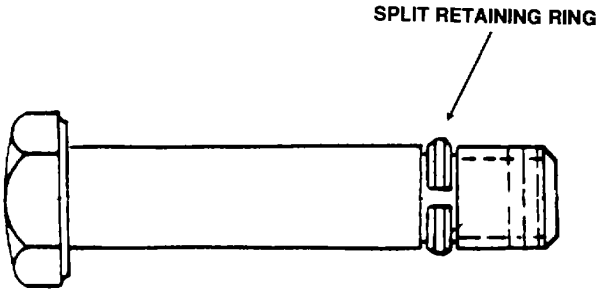

IMPEDANCE BOLT

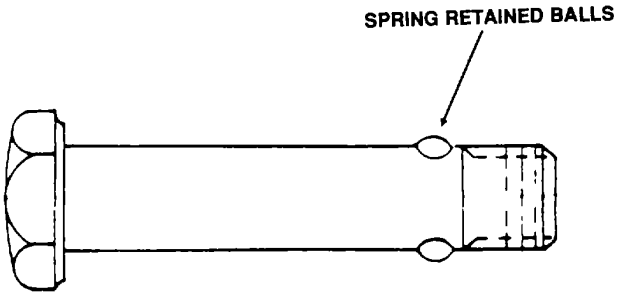

IMPEDANCE BOLT

Figure 2-8A. Self-Retaining Bolts

Downloaded from http://www.everyspec.com

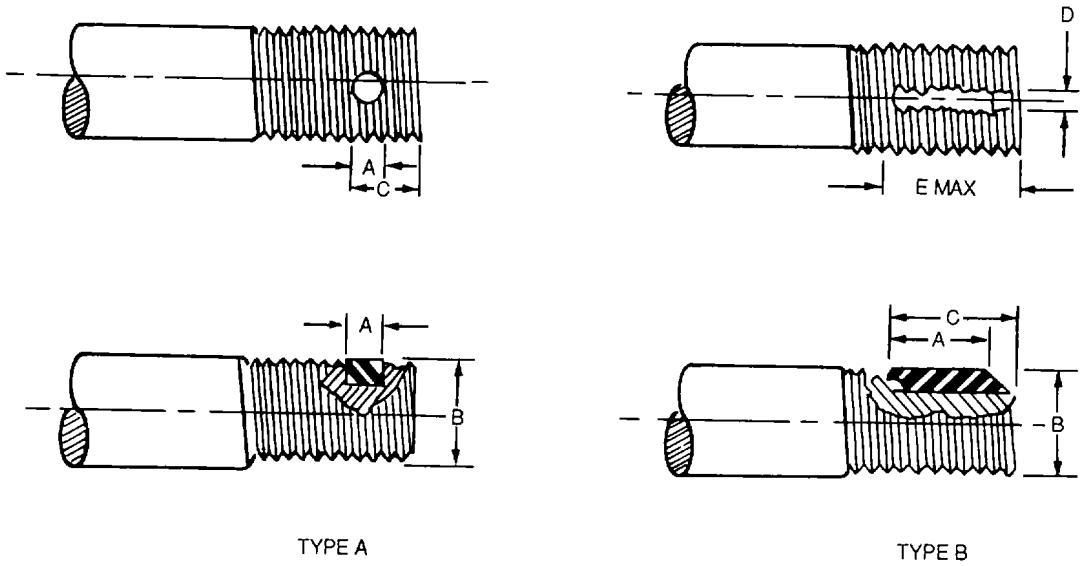

GOVERNMENT DESIGNATION	THREAD SIZE	TYPE	INSERT MATERIAL	A	B MAX	B MIN	C		D	E
1	4-40 NC	A	ZYTEL 101	0 0625 (±0 0100)	0 115	0 106	0 141 (±0 020)			
2		B	PLASKON	0 2187 (±0 0312)			0 2500 (±0 0312)		0 035 0 040	0 2969
3	6-32 NC	A	ZYTEL 101	0 0781 (± 0 0100)	0 141	0 131	0 064 (±0 020)			
4		B	PLASKON	0 2500 (±0 0312)			0 3125 (±0 0312)		0 010	0 3594
5	5-32 NC	A	ZYTEL 101	0 0625 (±0 0100)	0 164	0 157	0 172	0 010		
6				0 0937 (±0 0100)	0 167			0 020		
7		B	PLASKON	0 3125 (±0 0312)			0 3750	0 0312	0 040 0 010	0 4375
8	10-32 NF-3	A	ZYTEL 101	0 0937 (±0 0100)	0 193	0 184	0 188	0 020		
9		B	PLASKON	0 3125 (±0 0312)			0 3750	0 0312	0 040 0 010	0 4219
10	1/4-28 UNF-3	A	ZYTEL 101	0 1094 (±0 0100)	0 253	0 243	0 211	0 020		
11		B	PLASKON	0 0937 (±0 0100)			0 3750	0 0312	0 035 0 010	0 4219
12	5/16-24 UNF-3	A	ZYTEL 101	0 1406 (±0 0100)	0 315	0 305	0 242	0 020		
13							0 258			
14		B	PLASKON	0 3750 (± 0 0312)			0 4375	0 0312	0 035 0 010	0 5156
15	3/8-24 UNF-3	A	ZYTEL 101	0 1562 (±0 0100)	0 378	0 368	0 250	0 020		
16							0 264	0 020		
17					0 385			0 010		
18	7/16-20 UNF-3				0 439	0 492	0 281	0 020		
19					0 448			0 010		
20	1/2-20 UNF-3				0 502	0 492		0 020		
21					0 510			0 010		

NOTE

DIMENSIONS SHOWN ARE IN INCHES

Figure 2-9. Self-Locking Bolt

Downloaded from http://www.everyspec.com

(1) Flush head. The flush-type Jo-Bolt, as shown in figure 2-10, normally takes the same size countersink or dimple required for the same corresponding size standard screw head. The nut and bolt are made of alloy steel. The sleeve is annealed corrosion-resistant steel. All components are cadmium-plated. There is one flush-type Jo-Bolt designed to fit a countersunk or dimpled hole prepared for a precision rivet. Nut shank size and material specifications are the same

(2) Hex head. Hex-type Jo-Bolts, as shown in figure 2-11, have an alloy steel bolt and an annealed corrosion-resistant sleeve. The bolt and sleeve are cadmium-plated.

(3) Millable hex head. The millable hex-type Jo-Bolt, as shown in figure 2-12, normally takes the same size countersink or dimple required for the corresponding size rivet. The bolt is alloy steel and the sleeve is corrosion-resistant steel, both cadmium-plated. The nut is an aluminum alloy. After installation, the nut is milled flush

(*4) Oversize*. The oversize-type Jo-Bolt is used in special applications where the hole size has been exceeded and standard Jo-Bolts cannot be used.

q. *Huck Bolts (Lockbolt*). The Huckbolt is a form of bolt, combining the features of both a high strength bolt and a rivet, with advantages over each. The Huck bolt is generally used in wing splice fittings, landing gear fittings, fuel cell fittings, longerons, beams, skin splice plates, and other major structural attachments. It is easier and more quickly installed than the conventional rivet or bolt and eliminates the use of lockwashers, cotter pins, and special nuts. Like the rivet, the Huck bolt requires a pneumatic hammer or pull gun for installation. When installed, the Huck bolt is rigidly and permanently locked in place

r. *Fitting Structural Bolts.* There are two basic methods for fitting structural bolts. These methods are presented in the following paragraphs.

(1) Bolt fit. All bolt holes should present a good mechanical fit. Generally, it is permissible to use the first lettered drill size larger than nominal diameter, except where standard hexagon bolts are used in light-drive fit applications and where close tolerance bolts or clevis bolts are used. All drills above 1/2 inch are required by the inch-diameter size of the bolt used. Special fits will be discussed under the respective bolts. Bolt holes must not be oversized or elongated as the bolt in such a hole will carry none of its shear load until the parts have yielded or deformed enough to allow the beanng surface of the oversized hole to come into contact with the bolt. A bolted joint with an oversized hole is shown in figure 2-13. It must be remembered that bolts are not swaged to fill up the hole as rivets are. Loose bolts may cause failure of other bolts since they are forced to carry a greater load than originally intended. Oversize or elongated holes may be drilled or reamed to take the next larger bolt provided the greater hole size does not weaken the part. Consult the aircraft maintenance manual or maintenance officer before using this procedure. All bolt holes must be normal to the surface involved to provide full beanng surface for bolt head and nut.

(2) Drive fit. A tight drive or light drive fit may be used. Tight drive fit is obtained as bolt moves into place when struck sharply with a hammer. Light drive fit may be considered an interference fit of 0 0006 inch for 5/8 inch diameter. (Other sizes are proportioned) Obtain a light fit as follows:

(a) Measure several bolts of correct nominal size with a micrometer, and separate them into three groups large, medium and small.

(b) Drill initial hole approximately 1/32 inch undersize (1/8 inch undersize for holes 3/4 inch or larger), redrill to 1/64 inch undersize.

(c) Select reamer to cut hole that will give proper interference when using bolts of small group. Ream one or two holes and try fit of small bolts.

(d) When hole is too small, use a reamer of same nominal size, but with a slightly larger cut.

(e) When either of first holes are too large for light-drive fit conditions with small bolts, use medium or large group to satisfy light-drive fit conditions. Tap lightly into position.

NOTE

Take particular care to avoid elliptical, eccentric, or otherwise untrue holes. These holes may allow the bolt to be driven according to requirements yet prohibit the necessary hole contact along the entire grip length.

s. *Substitutions for Huck., Hi-Lok. and NAS Bolts.* These bolts can be replaced by the bolts listed in table 2-6. Diameter dash numbers for all bolts are the same. The hole sizes shown in table 2-6 are applicable to all

Downloaded from http://www.everyspec.com

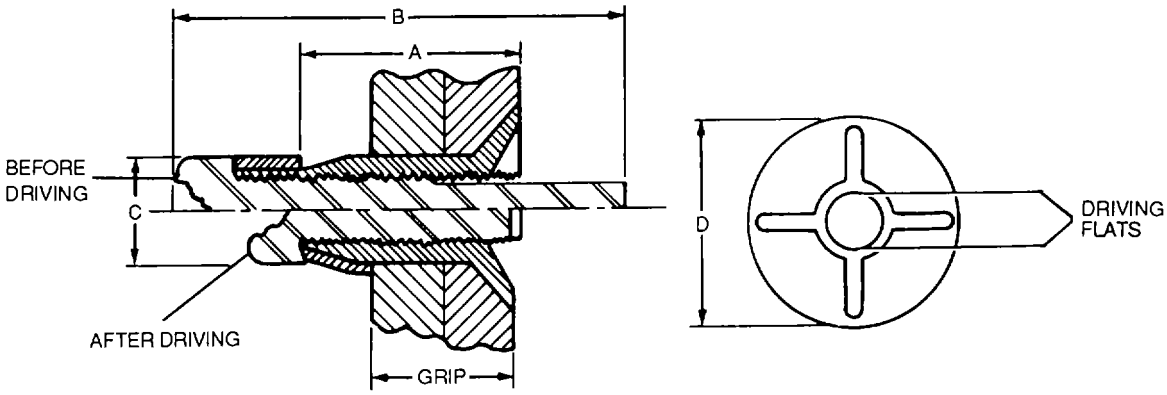

BOLT SIZE			NO 8 NOMINAL		NO 10 NOMINAL		1/4 NOMINAL		5/16 NOMINAL		3/8 NOMINAL	
DASH NO	GRIP RANGE MIN	GRIP RANGE MAX	A (±0 015)	B (±0 015)	A (±0 015)	B (±0 015)	A (±0 015)	B (±0 015)	A (±0 015)	B (±0 015)	A (±0 015)	B (±0 015)
2	0 094	0 156	0 230	0 733	0 228	0 853	0 256	0 881				
3	0 156	0 219	0 293	0 795	0 291	0 916	0 319	0 944	0 344	1 096	0 417	1 179
4	0 219	0 281	0 355	0 858	0 353	0 978	0 381	1 006	0 406	1 158	0 479	1 242
5	0 281	0 344	0 418	0 920	0 416	1 041	0 444	1 069	0 469	1 221	0 542	1 304
6	0 344	0 406	0 480	0 983	0 478	1 103	0 506	1 131	0 531	1 283	0 604	1 367
7	0 406	0 469	0 543	1 045	0 541	1 166	0 569	1 194	0 594	1 346	0 667	1 429
8	0 469	0 531	0 605	1 108	0 603	1 228	0 631	1 256	0 656	1 408	0 729	1 492
9	0 531	0 594	0 668	1 170	0 666	1 291	0 694	1 319	0 719	1 471	0 792	1 554
10	0 594	0 656	0 730	1 233	0 728	1 353	0 756	1 381	0 781	1 553	0 854	1 617
11	0 656	0 719	0 793	1 295	0 791	1 416	0 819	1 444	0 844	1 596	0 917	1 679
12	0 719	0 781	0 855	1 358	0 853	1 478	0 881	1 506	0 906	1 658	0 979	1 742
13	0 781	0 844	0 918	1 420	0 916	1 541	0 944	1 569	0 969	1 721	1 042	1 804
14	0 844	0 906	0 980	1 483	0 978	1 603	1 006	1 631	1 031	1 783	1 104	1 867
15	0 906	0 969	1 043	1 545	1 041	1 666	1 069	1 694	1 094	1 846	1 167	1 929
16	0 969	1 031	1 105	1 608	1 103	1 728	1 131	1 756	1 156	1 908	1 229	1 992

PART NO	NOM SIZE	NUT DIA C	HEAD DIA D		PILOT DRILL		FINAL REAM	
		TYPE F, FO, AND 426F	TYPE F AND FO	TYPE 426F	TYPE F AND 426F	TYPE FO	TYPE F AND 426F	TYPE FO
164	NO 8	0 161 0 156	0 332 0 325	0 290 0 282	NO 25 0 150	NO 20 0 161	0 167 0 164	0 182 0 180
200	NO 10	0 199 0 195	0 385 0 378	0 357 0 349	NO 15 0 180	NO 7 0 201	0 202 0 199	0 217 0 215
260	1/4	0 260 0 254	0 507 0 499	0 480 0 472	D 0 246	G 0 261	0 263 0 260	0 278 0 276
312	5/16	0 312 0 306	0 635 0 626	0 568 0 559	L 0 290	N 0 302	0 315 0 312	0 329 0 327
375	3/8	0 375 0 366	0 762 0 752	0 698 0 688	S 0 348	U 0 368	0 378 0 374	0 392 0 390

NOTE
DIMENSIONS SHOWN ARE IN INCHES

Figure 2-10. Flush Head Jo-Bolt

Downloaded from http://www.everyspec.com

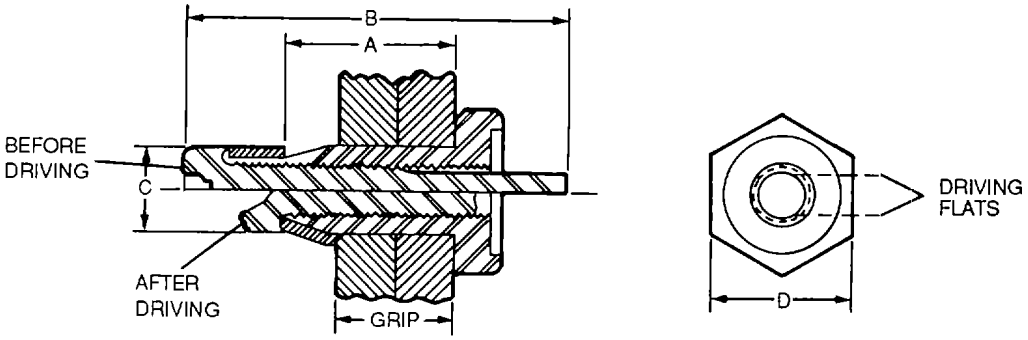

BOLT SIZE			NO 8 NOMINAL		NO 10 NOMINAL		1/4 NOMINAL		5/16 NOMINAL		3/8 NOMINAL	
DASH NO	GRIP RANGE MIN	GRIP RANGE MAX	A (±0 015)	B (±0 015)	A (±0 015)	B (±0 015)	A (±0 015)	B (±0 015)	A (±0 015)	B (±0 015)	A (±0 015)	B (±0 015)
1	0 031	0 094	0 168	0 733								
2	0 094	0 156	0 230	0 795	0 228	0 936	0 256	1 006				
3	0 156	0 219	0 293	0 858	0 291	0 999	0 319	1 069	0 344	1 221	0 417	1 304
4	0 219	0 281	0 355	0 920	0 353	1 061	0 381	1 131	0 406	1 283	0 479	1 367
5	0 281	0 344	0 418	0 983	0 416	1 124	0 444	1 194	0 469	1 346	0 542	1 429
6	0 344	0 406	0 480	1 045	0 478	1 186	0 506	1 256	0 531	1 408	0 604	1 492
7	0 406	0 469	0 543	1 108	0 541	1 249	0 569	1 319	0 594	1 471	0 667	1 554
8	0 469	0 531	0 605	1 170	0 603	1 311	0 631	1 381	0 656	1 533	0 729	1 617
9	0 531	0 594	0 668	1 233	0 666	1 374	0 694	1 444	0 719	1 596	0 792	1 679
10	0 594	0 656	0 730	1 295	0 728	1 436	0 756	1 506	0 781	1 658	0 854	1 742
11	0 656	0 719	0 793	1 358	0 791	1 499	0 819	1 569	0 844	1 721	0 917	1 804
12	0 719	0 781	0 855	1 420	0 853	1 561	0 881	1 631	0 906	1 783	0 979	1 867
13	0 781	0 844	0 918	1 483	0 916	1 624	0 944	1 694	0 969	1 846	1 042	1 929
14	0 844	0 906	0 980	1 545	0 978	1 686	1 006	1 756	1 031	1 908	1 104	1 992
15	0 906	0 969	1 043	1 608	1 041	1 749	1 069	1 819	1 094	1 971	1 167	2 054
16	0 969	1 031	1 105	1 670	0 103	1 811	1 131	1 881	1 156	2 033	1 229	2 117

PART NO	NOM SIZE	NUT DIA C	HEAD DIA D		PILOT DRILL		FINAL REAM	
		TYPE P, PO, AND PA	TYPE P AND PO	TYPE PA	TYPE PO	TYPE P AND PA	TYPE P AND PA	TYPE PO
164	NO 8	0 161 0 156	0 250 0 244	0 283 0 277	NO 20 0 161	NO 25 0 150	0 167 0 164	0 182 0 180
200	NO 10	0 199 0 195	0 312 0 305	0 346 0 332	NO 7 0 201	NO 15 0 180	0 202 0 199	0 217 0 215
260	1/4	0 260 0 254	0 375 0 367	0 472 0 458	G 0 261	D 0 246	0 263 0 260	0 278 0 276
312	5/16	0 312 0 306	0 437 0 429		N 0 302	L 0 290	0 315 0 312	0 329 0 327
375	3/8	0 375 0 366	0 500 0 491		U 0 368	S 0 348	0 378 0 374	0 392 0 390

NOTES

1 PA TYPE NOT AVAILABLE IN THESE SIZES
2 DIMENSIONS SHOWN ARE IN INCHES

Figure 2-11. Hexagon Head Jo-Bolt

Downloaded from http://www.everyspec.com

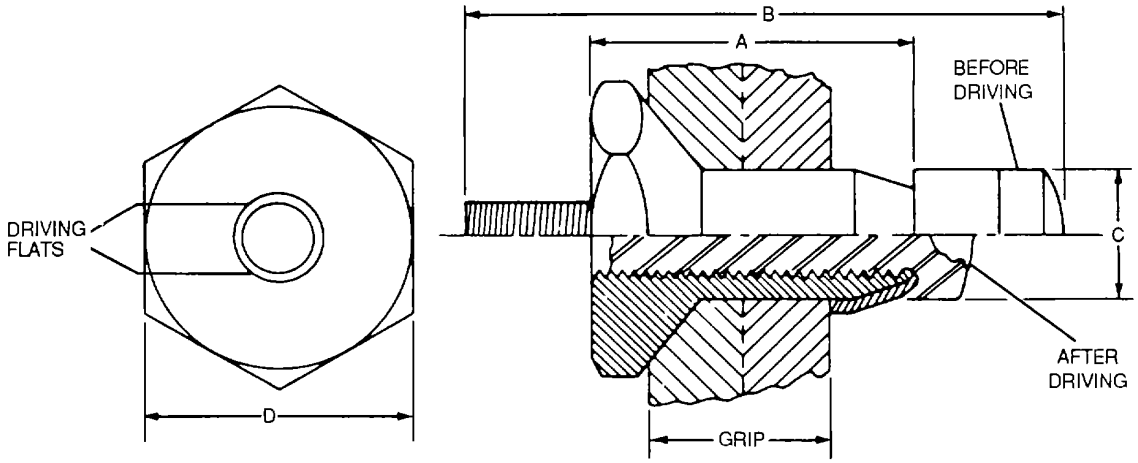

BOLT SIZE			NO 8 NOMINAL		NO 10 NOMINAL		1/4 NOMINAL	
DASH NO	GRIP RANGE		A (±0 015)	B (±0 015)	A (±0 015)	B (±0 015)	A (±0 015)	B (±0 015)
	MIN	MAX						
1								
2	0 094	0 156	0 305	0 795	0 308	0 936	0 366	
3	0 156	0 219	0 368	0 858	0 371	0 999	0 399	
4	0 219	0 281	0 430	0 920	0 433	1 061	0 461	
5	0 281	0 344	0 493	0 983	0 496	1 124	0 524	
6	0 344	0 406	0 555	1 045	0 558	1 186	0 586	
7	0 406	0 469	0 618	1 108	0 621	1 249	0 649	
8	0 469	0 531	0 680	1 170	0 683	1 311	0 711	
9	0 531	0 594	0 743	1 233	0 746	1 374	0 774	
10	0 594	0 656	0 805	1 295	0 808	1 437	0 836	
11	0 656	0 719	0 868	1 358	0 871	1 499	0 899	
12	0 719	0 781	0 930	1 420	0 933	1 561	0 961	
13	0 781	0 844	0 933	1 483	0 996	1 624	1 024	
14	0 844	0 906	1 055	1 545	1 058	1 686	1 086	
15	0 906	0 969	1 118	1 608	1 121	1 749	1 149	
16	0 969	1 031	1 180	1 670	1 183	1 811	1 211	

PART NO	NOM SIZE	NUT DIA C	HEAD DIA D	PILOT DRILL	FINAL REAM
164	NO 8	0 161 0 156	0 283 0 277	NO 25 0 150	0 167 0 164
200	N0 10	0 199 0 195	0 346 0 332	NO 15 0 180	0 202 0 199
260	1/4	0 260 0 254	0 472 0 458	D 0 246	0 263 0 260

NOTE
DIMENSIONS SHOWN ARE IN INCHES

Figure 2-12. Millable Hexagon Head Jo-Bolt

Downloaded from http://www.everyspec.com

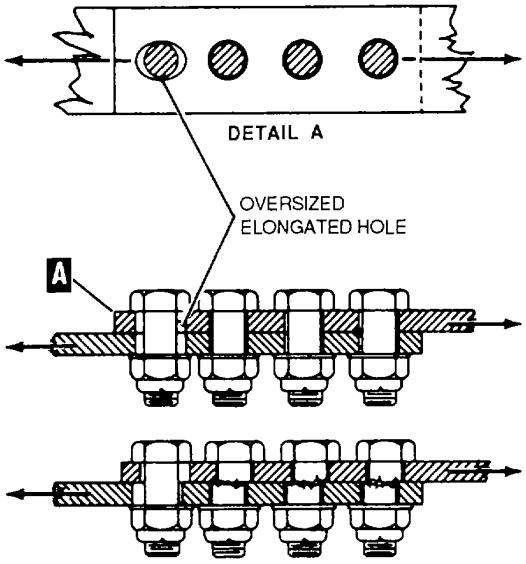

Figure 2-13. Bolted Joint with Oversize Hole

installations where high-shear capability is required. An exception to this high-shear capability is the hardware installed in the body structure maintenance splices. Standard bolts or screws may be substituted for Huck bolts provided the following criteria are met:

- Use standard bolts or screws only when Huck bolts or equivalent fasteners are not available.
- The hole diameter must be large enough not to interfere with the threads of the bolts, but small enough to provide interference fit between the hole and the shank of the bolt.
- When bolts are used to replace Huck bolts used in shear applications, the following series bolts can be used: NAS 1103-1120, NAS 1303-1320, NAS 6203-6220, NAS 624 and Hi-Lok HL-18. When bolts are used to replace Huck bolts used in tension applications, use NAS 624 series bolts (use NAS 1303 for replacement of 3/16-inch diameter Huck bolts used in tension).

Table 2-6. Huck and Hi-Lok Bolt Substitution

Huck part No.	Hi-Lok part No.	NAS part No.	Hole dia. (inches)
R 3001-5	HL18-5	NAS1465	0.161 to 0 164
R 3001-6	HL18-6	NAS1466	0.185 to 0 188
R 3001-8	HL18-81	NAS1468	0 242 to 0.246
R 3001-10	HL18-10	NAS1470	0.307 to 0.310
R 3002-5	HL21-5	---------	0.161 to 0.164
R 3002-6	HL21-6	NAS1956	0.185 to 0.188
R 3002-8	HL21-8	NAS1458	0.242 to 0.246
R 3002-10	HL21-10	NAS1460	0.307 to 0.310

Downloaded from http://www.everyspec.com

- Under emergency conditions, any steel bolt or screw of the same nominal diameter as the hole having a tensile strength of 125,000 psi may be used, provided it is replaced with the correct fastener within 25 flight hours.

t. Substitutions for Jo-Bolts and V-Bolts. These bolts can be replaced by the bolts listed in table 2-7. Jo-Bolts are numbered in relation to their diameter. The asterisk denotes the length dash number. This type of fastener is used primarily in blind installations.

2-3. Nuts. The following paragraphs present the various families of aircraft structural nuts, their types, means of identification, and proper applications. Thread Protrusion in all installations, bolts, studs, or screws must extend through the nut for at least two full sized threaded pitches. This applies to both self-locking and plain nuts, and includes any chamfer at the bolt end. The bolt has a chamfered end, which results in the first two threads being smaller than the rest of the treads for easier mating of the nut and bolt. The requirement for the thread protrusion is based on a principle applicable to a bolt and nut assembly when overloaded to the point of failure. The principle is simply that the failure should not consist of thread stripping. The preferred mode of failure is separation at the shank.

a. Self-Locking Nuts. Self-locking nuts are used on aircraft to provide tight connections, which will not shake loose under severe vibration. These nuts must meet the critical specification as to strength, corrosion resistance, and temperature range set forth in MIL-N- 25027 before they can be used. Standard nuts are shown in figures 2-14 and 2-15.

(1) Types. The two general type self-locking nuts currently in use are designated as the all-metal type and the nonmetallic insert (fiber or nylon) type. Each obtains its locking quality through a different means as indicated by its respective title.

(a) All-metal self-locking nuts. Locking action of the nut depends upon the ability of the metal to recover its size and shape when the locking action and the load-carrying portion are engaged by bolt or screw threads. When used, the following criteria must be met:

Table 2-7. Jo- and V-Bolt Substitution

Jo-Bolt part No	V-Bolt part No.	Hole dia (inches)
WP 164	BA5A*H	0 164 to 0.168
WP 200	BA6A*H	0.199 to 0.203
WP 260	BA8A*H	0.261 to 0.265
WP 312	BA1OA*H	0.313 to 0.317
WP 164	BA5A*F	0.164 to 0.168
WP 200	BA6A*F	0.199 to 0.203
WP 260	BA8A*F	0.261 to 0 265
WP 312	BA1OA*F	0.313 to 0.317

- All-metal self-locking nuts shall not be reused in critical applications where failure could cause loss of the aircraft or endanger life.

- When absolutely necessary, all-metal self- locking nuts may be reused in no critical applications only, and then only after having equaled or exceeded the minimum breakaway torque value for the applicable size nut, as given in table 2-8.

- High temperature, MS20500 or approved equivalent, and silver-plated, all-metal, self-locking nuts will not be subjected to temperatures in excess of 1200 F (648 C).

- Do not subject cadmium-plated, all-metal, self-locking nuts to temperatures in excess of 450 F (232 C).

- Do not run a thread-cutting tap through an all-metallic, self-locking nut, as this will destroy the self-locking properties.

b) Nonmetallic insert self-locking nuts. The nonmetallic fiber or nylon insert is pressed within the inside diameter of the nut proper. When a screw or bolt is installed, the insert stretches and forces contact between itself and the bolt or screw threads, producing the locking action. When used the following criteria must be met:

- Nonmetallic self-locking nuts shall not be reused in critical applications where failure could cause loss of the aircraft or endanger life.

- When absolutely necessary, nonmetallic self-locking nuts may be reused in non-critical applications only, and then only after having equaled or exceeded the minimum breakaway torque value for the applicable size nut, as as given in table 2-8.

Downloaded from http://www.everyspec.com

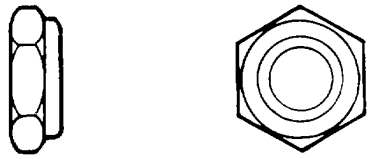

Figure 2-14. Self-Locking Thin Nut

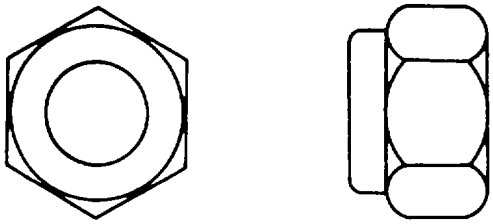

DASH NUMBER	THREAD		AXIAL TENSILE STRENGTH
	SIZE	CLASS	
-1032	10-32	NF-3	2400
-428	1/4-28	NF-3	4360
-524	5/16-24	NF-3	6970
-624	3/8-24	NF-3	10,500
-720	7/16-20	NF-3	14,200
-820	1/2-20	NF-3	19,200
-918	9/16-18	NF-3	24,400
-1018	5/8-18	NF-3	30,700
-1216	3/4-16	NF-3	44,800
-1414	7/8-14	NF-3	61,100
-1614	1-14	NF-3	81,600

NOTES

1 DASH NUMBER INDICATES THREAD SIZE
2 EXAMPLE OF PART NUMBER
MS20500-428 = NUT, THREAD SIZE 1/4-28
3 MATERIAL
HEAT- AND CORROSION-RESISTANT STEEL, MILITARY SPECIFICATION MIL-N-7873
4 FINISH
SILVER PLATING, MILITARY SPECIFICATION MIL-B-7873

Figure 2-15. Self-Locking Plain Nut

Downloaded from http://www.everyspec.com

Table 2-8. Minimum Breakaway Torque for Used All-Metallic and Nonmetallic Self-Locking Nuts

Nut size	Minimum breakaway torque (in-lbs)[1]
Fine Thread	
10-32[2]	
1/4-28[2]	
5/16-24	6.5
3/8-24	9.5
7/16-20	14.0
1/2-20	18.0
9/16-18	24.0
5/8-18	32.0
3/4-16	50.0
7/8-14	70.0
1-12	90.0
1 1/8-12	117.0
1 1/4-12	143.0
1 3/8-12	180.0
1 1/2-12	210.0
Coarse Thread	
4-40[2]	
6-32[2]	
8-32[2]	
10-24[2]	
1/4-20[2]	
5/16-18	7.5
3/8-16	12.0
7/16-14	16.5
1/2-13	24.0
9/16-12	30.0
5/8-11	40.0
3/4-10	60 0
7/8-9	82 0
1-8	110.0
1 1/8-7	137 0
1 1/4-7	165.0
1 3/8-6	200.0
1 1/2-6	230.0
1 3/4-5	300.0

[1] Minimum breakaway torque is defined as the torque necessary to start the nut on or off the bolt with no axial load on the nut and with the bolt through the nut.

[2] Test nut for minimum breakaway torque by attempting to insert a matching bolt by hand Reuse only those nuts that cannot be tightened down with fingers after the locking action engages bolt or stud. Nuts that do not meet the minimum breakaway torque shall not be used

Downloaded from http://www.everyspec.com

- Bolts, studs, and screws of 5/16-inch diameter and over with cotter pin holes may be used with nonmetallic insert self-locking nuts, provided the cotter pin holes are free from burrs. Burrs tend to tear the nonmetallic insert, rendering it unsatisfactory as a locking device.
- Bolts, studs, and screws of 1/4-inch diameter and under with cotter pin holes may be used with nonmetallic insert self locking nuts in an emergency. These nuts shall be replaced as soon as possible with the specified type.
- Do not use bolts, studs, and screws with rough ends and damaged threads
- Do not subject nonmetallic self-locking insert nuts to temperatures in excess of 250°F (121°C).
- Do not run a thread-cutting tap through a nonmetallic insert self-locking nut, as this will destroy the self-locking properties.

(2) Application Self-locking nuts are used in conjunction with specially fabricated parts, or they are fabricated for specific purposes Various applications of self-locking nuts include use as plate nut, channel assemblies, and for engines and accessories. Except as stated herein, the various applications of self-locking nuts are subject to the same general guidelines described previously for all-metallic and nonmetallic self-locking nuts.

(a) Plate nuts. Plate nuts, also called anchor nuts, are shown in figures 2-16 through 2-18 These self-locking nuts, MS21047, MS21048, and MS21078, are used to give flexibility in locations where the self-locking feature is required for use. These nuts must be handled and installed carefully to prevent them from being deformed. Bases are countersunk for flush mounting, plain for modified welding, and equipped with ribs for projection welding (figure 2-18) The floating anchor nut (figure 2-17) is designed so the plate will hold the nut, with a sideways floating feature, approximately centered over a bolt or screw hole. When properly tightened, the nut rests firmly against its holder Floating anchor nuts are for nonstructural usage and should be used in locations where the temperature does not exceed 250°F (121°C). Bolts and screws 1/4 inch diameter and smaller with cotter pin holes should not be used in all metal plate nuts Self-locking plate nuts may be reused as long as they meet the minimum breakaway torque requirements of table 2-8.

NOTE

Plate nuts, installed with projection welds, will be removed by drilling out the welds in such a manner that a standard drilled plate nut can be used for replacement.

(b) Channel assemblies. Channel assemblies with only a few rivets, as shown in figure 2-19, permit attachment of numerous self-locking nuts. The channels are track-like bases with regularly spaced removable or nonremovable nuts. The removable-type channel assembly carries a floating nut which can be snapped in or out to simplify removal of damaged nuts. Self-locking nuts may be reused as long as they meet the minimum breakaway torque requirements of table 2-8. Replace the individual damaged nuts or the channel assembly as appropriate.

(c) Engines and accessories Self-locking nuts applicable only to engines and accessories are used as follows

1 Secure rocker box covers on air- cooled engines with self-locking nuts.

2 Use self-locking nuts where specified by manufacturer on his assembly drawings, part lists, and bills of materials, or where their use is shown in the applicable illustrated parts breakdown manual for a particular type and model of engine or accessory.

3 Do not use No. 10 or 1/4-inch size self-locking nuts with drilled studs

4 See figure 2-20 for example of an engine self-locking nut.

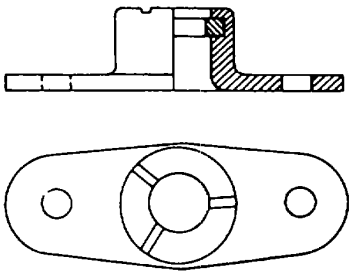

Figure 2-16. Self-Locking Plate Nut

Downloaded from http://www.everyspec.com

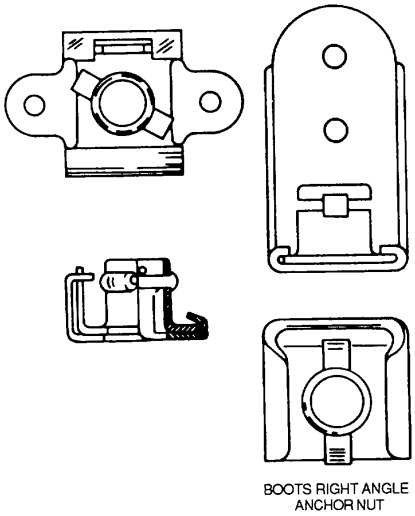

Figure 2-17. Floating Anchor Nuts

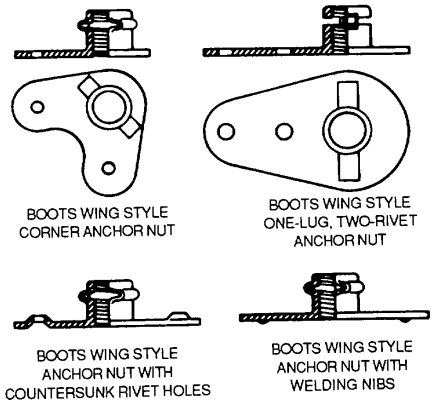

Figure 2-18. Plate Nut Styles

CAUTION

Self-locking nuts shall not be reused in applications where failure could cause loss of the aircraft or danger to life.

(3) Installation. Self-locking nuts, like most aircraft parts, are precision-built. To perform their job effectively, they must be handled properly.

(a) Instructions. The procedures for installing self-locking nuts are as follows:

1 Since self-locking nuts are purposely made with a tight locking insert, a wrench must be used to tighten them.

2 Start nut and bolt connections by hand to prevent cross threading.

3 Use drift pin carefully when lining up nut and screw holes to avoid damaging nut.

4 Prevent overstressing bolt and nut threads by using a torque wrench and recommended torque values specified in table 2-9.

5 Use proper tools at all times. Socket and box end wrenches are preferred to open end wrenches as they will not damage the corners of the nuts.

(b) Limitations. Self-locking nut installation limits are shown in figure 2-21. The limit criteria as applicable are as follows:

- Round- or chamfered-end bolts or screws, as shown in figure 2-21, must extend at least the full round or chamfered area plus one thread pitch through the nut.
- Flat end bolts or screws, as shown in figure 2-21, shall extend at least two thread pitches through the nut.
- Nuts, made to the minimum height, that are used with bolts of maximum length may give the indication that too many threads are exposed and the grip of the bolt is pushing against the face of the nut. There is no assurance that this is not true until the nut is removed and inspected for scratches.

Downloaded from http://www.everyspec.com

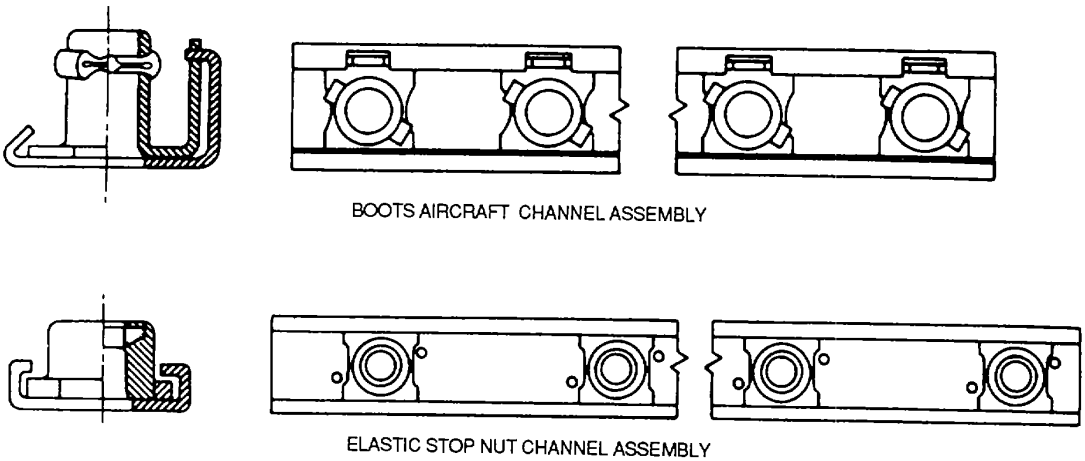

Figure 2-19. Channel Assemblies

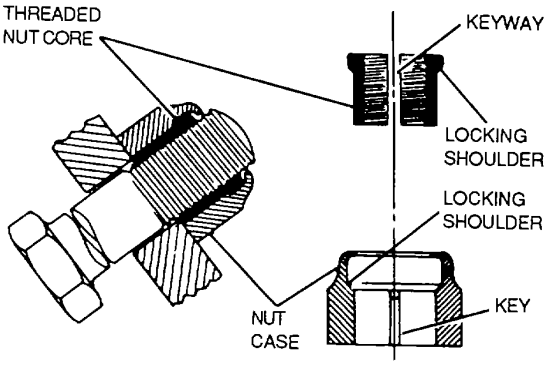

Figure 2-20. Engine Self-Locking Nut

- It may occasionally be necessary to remove the nut from the bolt to assure that the shank of the bolt has extended through the work.

- Use MS21083 nuts in shear applications only.

- Do not use self-locking nuts at joints in control systems when movement of the joint may result in motion of the nut relative to the surface against which it is bearing.

- Self-locking nuts may be used with antifriction bearings and control pulleys provided the inner race of the bearing is clamped to the supporting structures by the nut and bolt.

- Attachment of nuts will be accomplished so removal and replacement may be completed without injury to the structure.

CAUTION

Self-locking castellated nuts (MS17825 and MS17826) shall be safetied with a cotter pin or lockwire. The nonmetallic insert is not the primary safetying feature of these nuts.

- Because of the nonmetallic insert, the self-locking castellated nuts (MS17825 and MS17826) can be reused, but only after having equaled the minimum breakaway torque value for the applicable size nut, as given in table 2-8.

Downloaded from http://www.everyspec.com

Table 2-9. Recommended Torque Values

Size and thread	Plain & castellated steel hex nuts used with bolts in tension loading average range (In-lbs)[1]	Thin plain & castellated steel hex nuts used with bolts in shear loading average range (in-lbs)l
	Fine Thread	
8-36	12-15	7-9
10-32	20-25	12-15
1/4-28	50-70	30-40
5/16-24	100-140	60-85
3/8-24	160-190	95-110
7/16-20	450-500	270-300
1/2-20	480-690	290-410
9/16-18	800-1000	480-600
5/8-18	1100-1300	600-780
3/4-16	2300-2500	1300-1500
7/8-14	2500-3000	1500-1800
1-14	3700-5500	2200-3300[2]
1 1/8-12	5000-7000	3000-4200[2]
1 1/4-12	9000-11000	5400-6000[2]
	Coarse Thread	
8-32	12-15	7-9
10-24	20-25	12-15
1/4-20	40-50	25-30
5/16-18	80-90	48-55
3/8-16	160-185	95-100
7/16-14	235-255	140-155
1/2-13	400-480	240-290
9/16-12	500-700	300-420
5/8-11	700-900	420-540
3/4-10	1150-1600	700-950
7/8-9	2200-3000	1300-1800

See footnotes at end of table.

Downloaded from http://www.everyspec.com

Table 2-9. Recommended Torque Values - CONT

NOTE

- The above torque loads may be used for all cadmium-plated steel nuts of the fine or coarse thread series which have approximately equal number of threads and equal face bearing areas
- Torque values are nominal and may not agree with specific aircraft or engine maintenance manuals Torque values cited in specific manuals are correct for individual application.
- Size refers to bolt shank diameter or inside diameter of nut and thread indicates number of threads per inch.
- Torque values are derived from oil-free cadmium-plated threads.
- All torque values are based on use of 125 KSI bolts.
- Average torque values in shear loading are approximately 60 percent torque values in tension loading.

---

[1] Torque values are applicable to self-locking nuts as well.

[2] Estimated corresponding values.

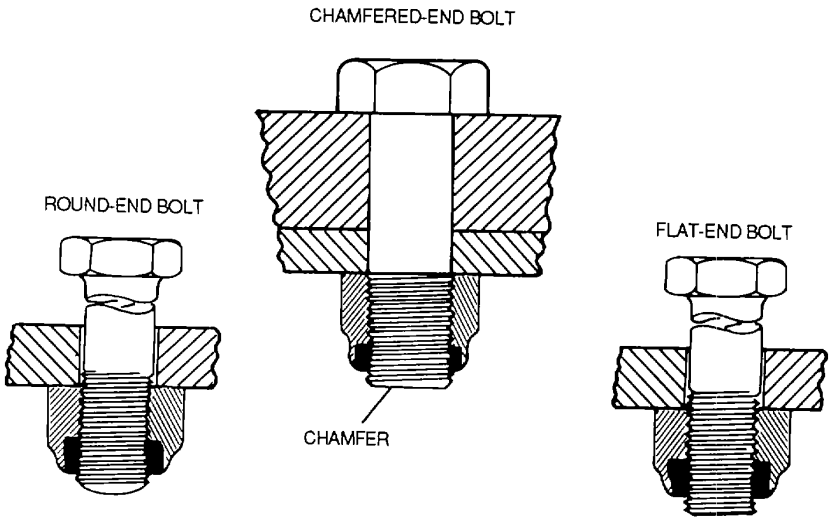

Figure 2-21. Self-Locking Nut Installation Limits

Downloaded from http://www.everyspec.com

(4) Substitution.. AN310 castellated nuts (paragraph 2-3b) may be substituted for MS21042 and MS21044 nuts, provided the AN310 nuts are secured with cotter pins. AN320 castle shear nuts may be substituted for MS21042, MS21083, and MS21245 nuts.

NOTE

These substitutions may be made when self-locking nuts are not available

(5) Temperature designations. High-temperature self-locking nuts are identified by the numeral 12 stamped into the metal They will withstand temperatures as high as 1200°F (649°C) Some high temperature self-locking nuts are identified by a letter H stamped into the metal They will withstand temperatures as high as 550°F (288°C). Standard self-locking nuts have no special markings, but are used within the temperature range of 0 to 250°F (-18 to 121°C.)

b. Castellated Nuts. There are three types of castellated nuts. They consist of airframe, shear, and engine castle nuts

(1) Airframe Use AN310 airframe castellated nuts, as shown in figure 2-22, in conjunction with drilled head bolts or studs. Use a cotter pin or lockwire to secure this nut

(2) Shear Use AN320 airframe castellated shear nuts, as shown in figure 2-23, for those devices, such as drilled clevis bolts and threaded taper pins, that are subjected to shear loads only.

(3) Engine. Engine castle nuts, AN121551 through AN121575, are identified by E11 stamped into the metal Do not substitute any other type nut.

c. Checknuts. Use AN316 aircraft plain check-nuts, as shown in figure 2-24, as a locking device for plain nuts, setscrews, threaded rod ends, and other similar Items

d. Jamnuts. Use hexagon jamnut, NAS509, with a washer, NAS513, for locking rod-end terminals to hydraulic piston rods Use lockwire as an additional locking device

e. Light Hexagon Nuts. Use MS35649, MS35650, and MS35690 light hexagon nuts, as shown in figure 2-25, in miscellaneous nonstructural applications. An auxiliary locking device should be used with these nuts.

f. Wingnuts. Use MS35425 and MS35426 wingnuts, as shown in figure 2-26, where desired tightness is ordinarily obtained by the fingers, and where the assembly is removed frequently. When a plain wingnut requires securing with lockwire, a 0 070 inch (± 0.010 inch) diameter hole must be drilled in the center of one lobe The WC02 self-locking wingnut does not require lockwire.

g. Sheet Spring Nuts. Sheet spring nuts, NAS444, NAS445, NAS446, and NAS395, as shown in figure 2-27, are commonly called speed nuts. Use with standard and sheet metal self-tapping screws in various nonstructural locations Speed nuts in supporting line clamps, conduit clamps, electrical equipment, access doors, and other similar items. Speed nuts are made from spring steel and are arched prior to tightening The arched spring lock prevents the screw from working loose They are easily inserted, and finger pressure keeps them from turning. The use of the wrenches is unnecessary Use speed nuts only where originally used in fabrication of the aircraft.

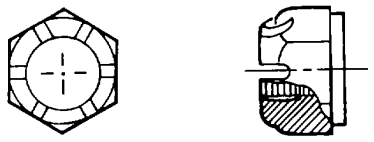

Figure 2-22. Airframe Castle Nut

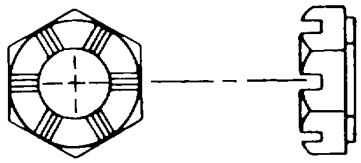

ROUND OR SQUARE
BOTTOM CASTELLATION OPTIONAL

Figure 2-23. Shear Castle Nut

Downloaded from http://www.everyspec.com

h *Internal Wrenching Nuts*. Use internal wrenching nuts, NAS443, where heat-treated, self-locking nuts are specified to carry high strength bolt tension loads.

i. *Identification of Nuts*. Any nut may be identified provided the type can be determined and mating bolt or screw is available Determine major diameter of bolt or screw with a micrometer Use a thread pitch gauge to match threads of bolt The number marked on the gauge segment will indicate the threads per inch, the thread pitch, and the inside diameter of the nut required.

NOTE

Proper gauge segment is ensured when no light is seen between the pitch of the bolt threads and the pitch of the gauge segment

j *Airframe Plain Nuts.* Use airframe plain nuts AN315, as shown in figure 2-28, in structural application. An auxiliary locking device, such as a checknut, or a lockwasher, is required when this type nut is used.

2-4. Washers. Washers used in aircraft structures are plain lockwashers, and special washers

a. *Plain Washers.* The AN960 plain washer, as shown in figure 2-29, is used under AN hexagon nuts to provide a smooth bearing surface It acts as a shim in obtaining the correct relationship between the threads of the bolt and the nut It will adjust the position of castellated nuts with respect to drilled cotter pin holes in bolts.

(1) Uses The general rule is to use one washer under each nut. However, if one washer falls to cover the underthread grip or falls to place the nut in the proper position for cotter pins, then one more washer may be added if more than two washers are needed, the bolt length should be changed. Other use criteria are as follows.

Use a cadmium-plated steel washer under the nut with the washer bearing directly against the structure unless otherwise specified.

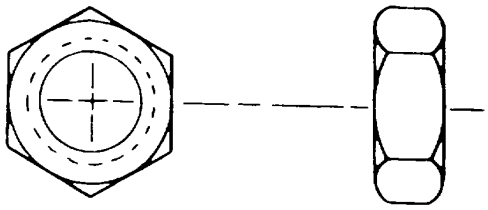

Figure 2-24. Plain Checknut

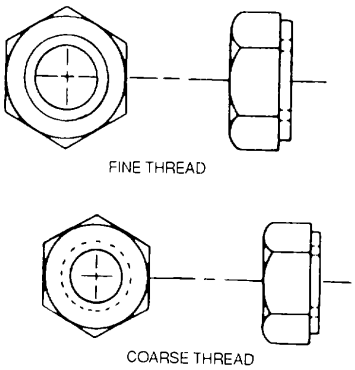

Figure 2-25. Light Hexagon Nuts

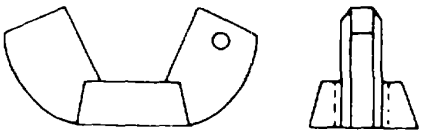

Figure 2-26. Wingnut

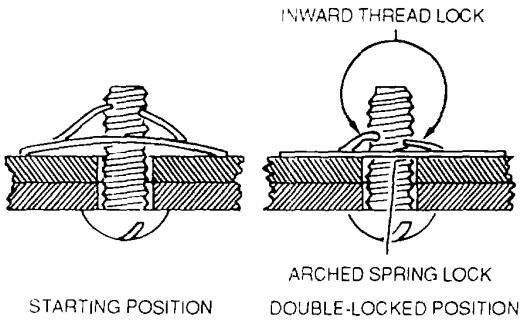

Figure 2-27. Sheet Spring Nut

Downloaded from http://www.everyspec.com

- Use plain washers under lockwashers to prevent damage to material surface.

- Use aluminum alloy washers under bolt heads or nuts on aluminum alloy or magnesium structures where corrosion is a factor.

- Use the AN961 brass nonstructural washer in electrical components and instrument mounting where nonmagnetic properties are required.

(2) AN part number. The AN washer code designation indicates type of washer, material, inside and outside diameter and thickness. Specific details and dimensions can only be definitely determined by referring to the particular AN standard

b. Lockwashers. Use lockwashers, MS35338 (split type) or MS35335, MS35336, MS35790 (internal, external, or countersunk teeth type), as shown in figures 2-30 and 2-31, with plain nuts when self-locking or castellated-type nuts are not applicable. Lockwashers may be used to prevent loosening of threaded fasteners in airframe construction under the following conditions:

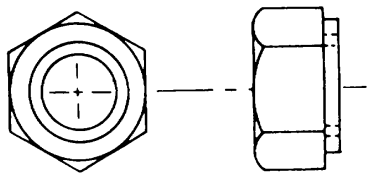

Figure 2-28. Airframe Plain Nut

WARNING

Lockwashers are not to be used on primary structures, secondary structures, superstructures, or accessories where failure might result in damage or danger to aircraft or personnel.

CAUTION

- Do not use lockwashers on soft metal, such as aluminum or magnesium, without a plain washer underneath to prevent damage to soft metal surface. Lockwashers shall not be used where their failure would permit leakage, or on exposed surfaces subject to airflow. Neither shall they be installed in places where they will be subjected to corrosion conditions, nor in places where they must be removed frequently. Damage to components may otherwise result.

- Do not reuse tabwashers Damage to components may otherwise result.

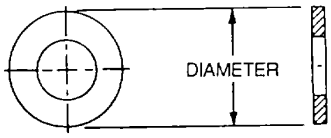

Figure 2-29. Plain Washer

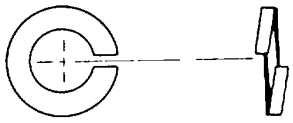

Figure 2-30. Split Lockwasher

Downloaded from http://www.everyspec.com

NOTE

Care should be taken to prevent dissimilar metal corrosion.

- When a self-locking feature cannot be provided in externally or internally threaded part.
- When a cotter pin cannot be used to prevent rotation of an internally threaded part with respect to an externally threaded part
- When lockwire cannot be used to prevent loosening of threaded parts.
- When fastening is not used for fabrication of primary structure.
- When loosening of threaded parts would not endanger the safety of aircraft to personnel
- When corrosion, encouraged by gouging of aluminum or magnesium alloys by edges of teeth on MS325333, MS35335, MS35336, and MS35790 washers, would not cause malfunctioning of parts being fastened together. Corrosion of dissimilar metals may be reduced by installing MS35333, MS35335, MS35336, and MS35790 washers wet with primer, MIL-P-23377.

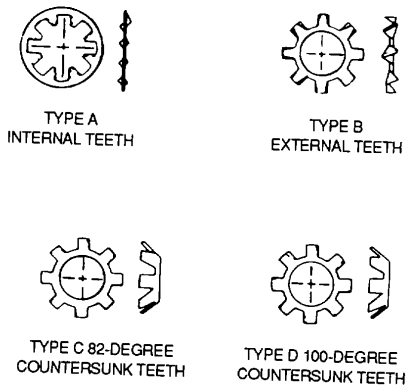

Figure 2-31. Teeth-Type Lockwashers

c. *High Tensile Special Washers.* Taper pin, high tensile, countersunk, and preload indicating special washers are identified in figures 2-32 through 2-35.

(1) Taper pin washers. Use a taper pin or dished washer, AN975, in conjunction with threaded taper pin, AN386 install washer under nut AN320 to effect adjustment where a plain washer would cause distortion.

(2) High tensile washers. Use a high tensile washer, MS20002, in conjunction with high tensile internal wrenching bolts, MS2004 through MS20018. A Type C washer is countersunk to seat the bolt head shank radius, and a plain type washer is used under the nut Plain and countersunk washers, MS20002 and MS20002C, are heat-treated to 125,000 to 145,000 psi.

(3) High Tensile Countersunk washers. Countersunk washers, commonly called dimpled washers, are for use with 100-degree flat-head screws, or rivets, to provide reinforced, low-profile attachments in such locations as fillets and other fairing installations. Identify countersunk washers by part number. Examples: A3236-0.012 (No. 6 screw), A31350-0 017 (No. 8 screw), A3235-0.020 (No. 10 screw).

CAUTION

Damage to preload indicating washer may occur if the nut is overtightened

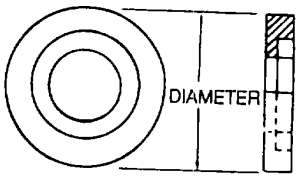

Figure 2-32. Taper Pin Washer

Downloaded from http://www.everyspec.com

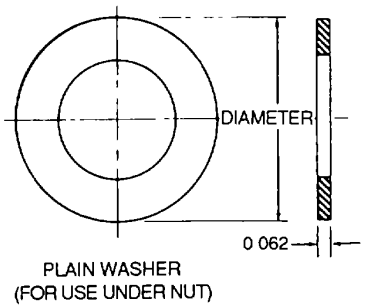

Figure 2-33. High Tensile Washer

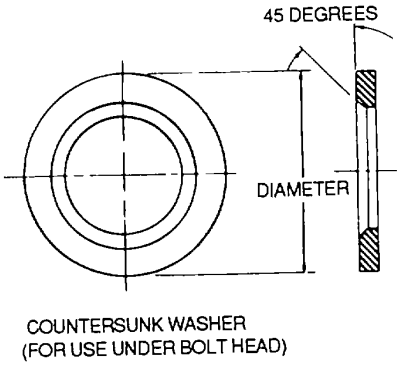

Figure 2-34. High Tensile Countersunk Washer

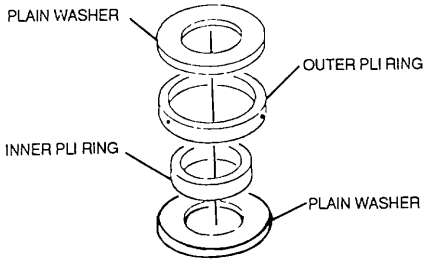

Figure 2-35. Preload Indicating Washers

(4) Preload indicating washers. The preload indicating washer consists of two plain washers, one inner preload washer, and one outer preload washer. The plain washers mash the inner preload ring into the outer preload ring; when this has occurred the nut or bolt is properly tightened.

(a) Installation . Install the preload indicating washers in the following order:

1 Install plain washer
2 Install Inner preload washer.
3 Install outer preload washer.
4 Install plain washer.

NOTE

An aircraft inspector or supervisor may be required to be present during tightening of the preload indicating washers to verify that the preload washer has been properly tightened.

(b) Tightening. To tighten preload indicating washers, use the following procedures:

1 Place a ratchet handle wrench with socket on the nut.
2 Place a scribe in one of the preload indicating outer ring holes.
3 Move the preload ring with the scribe and tighten the nut. As soon as you can no longer move the preload washer with the scribe, stop tightening the nut The proper load (or torque) has been reached.
4 The tightening procedure is the same whether the preload washer is used on a stud or with a bolt

2-5 Screws. Screws are the most common type of threaded fasteners used on aircraft. They are similar to other types of threaded fasteners, such as bolts, but differ mainly by using a lower material strength, a looser thread fit, and shanks threaded along their entire length. However, several types of structural screws are available that differ from structural bolts only in the type of head, the material is equivalent and there is a definite grip.

Downloaded from http://www.everyspec.com

a. *Screw Heads*. Aside from head style, such as countersunk, brazier-head, and round head, various type slots or recesses are provided for the screwdriver The Phillips or Frearson recessed head is optional on several type screws For proper performance, a Phillips screwdriver should be used with Phillips recessed-head screws, and a Frearson screwdriver with Frearson recessed-head screws. The Phillips and the Frearson screwdrivers are not interchangeable. Mutilation of the screw head can be prevented by using the proper type and size screwdriver

b. *Length Measurement*. Determine length of screws as follows:

(1) Measure flat-head screws from top of head to end of thread.

(2) Measure all other screws from bottom of end of thread as shown in figure 2-36.

NOTE

Lengths will be specified in 1/16-inch differences up to 1 12 inches; 1/8-inch differences from 1 1/2 inches to 3 inches, and 1/4-inch differences for all lengths over 3 inches.

c. *Structural Screws*. Structural screws are used in the primary structure of aircraft as structural bolts or rivets are used These screws are fabricated from a material with a high tensile strength and differ from structural bolts only in the type of head. They have a definite grip and the same shear strength as the equivalent size bolt. Examples include: MS24694 flat-head screws, and NAS220 through NAS235 brazier-head screws.

(1) *Flat countersunk-head screws.* The MS24694 (100-degree) flat countersunk head screw, as shown in figure 2-37, is used in countersunk holes where a flush surface is necessary.

(2) *Brazier-head screws*. The NAS220 through NAS235 brazier-head screws, as shown in figure 2-36, have the same characteristics as MS24694 flat-head screws, except for the difference in the heads The NAS80 (100-degree) close tolerance countersunk bolt is similar to the MS24694 (100-degree) flat-head screw

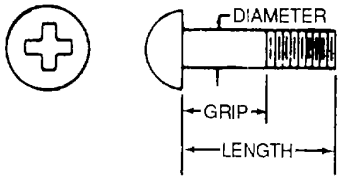

Figure 2-36. Structural Screw

(3) *Pan-head screws.* The MS27039 pan-head structural screw is used where the raised head is not objectionable The pan-type head provides a large contact area

NOTE

Screws are marked with a code to identify their physical characteristics and contents. Refer to table 2-1 for these code markings.

d *Machine Screws.* The main type of machine screws are round head, countersunk, and fillister head

(1) *Round-head screws.* Round-head screws, MS35206, MS35214, MS35218, MS51957, and MS35207, MS35215, MS35219, MS51958 are general purpose screws available in low carbon steel, brass, and corrosion-resistant steel. The MS35206, MS35214, MS35218, MS51957 are coarse thread screws and MS35207, MS352'15, MS35219, MS51958 are fine thread Both have recessed heads and a class 2 thread fit The AN508 brass screw is designed for electrical use only, and is available only with a slotted head.

(2) *Countersunk screws.* The MS35190, MS51959, and MS35199, MS35203, MS51960 countersunk screws correspond to round-head screws, MS35206, MS35214, MS35218, MS51957, and MS35207, MS35215, MS35219, MS51958, in material and application. The countersunk type, as shown in figure 2-38, is a low carbon steel screw.

Downloaded from http://www.everyspec.com

(3) Fillister head screws. Use general purpose fillister head screw, MS35265 and MS35275 coarse thread, and MS35266, fine thread, as capscrews in light mechanisms, such as for attaching cast aluminum gearbox cover plates. These screws have no grip, and those larger than No. 6 have one hole drilled through the head for safe tying. Fillister head screws, AN502, fine thread, and AN503, coarse thread, are heat treated. They have a small grip and are used as capscrews where greater strength is required. The coarse threaded screws are commonly used as capscrews in tapped aluminum alloy and magnesium castings because of the softness of the material. Fillister head screws are shown in figure 2-39.

e. *Self Tapping Screws*. Self-tapping screws include machine, sheet-metal, and drive screws.

CAUTION

Never use self-tapping screws to replace standard bolts, nuts, screws, or rivets in the original structure Damage to components may otherwise result.

(1) *Machine screws.* Use AN504 machine self-tapping screws, as shown in figure 2-40, to attach removable parts such as nameplates and other similar Items to castings. These screws tap their own mating threads when driven into untapped drilled or punched holes slightly smaller than the outside diameter of the screw itself.

(2) *Sheet-metal screws.* Use MS51861 and MS51862 screws in temporary attachment of sheet metal for riveting, and for permanent assembly on nonstructural assemblies where ability to insert screws in blind applications is required. To install, drill a hole and insert screw.

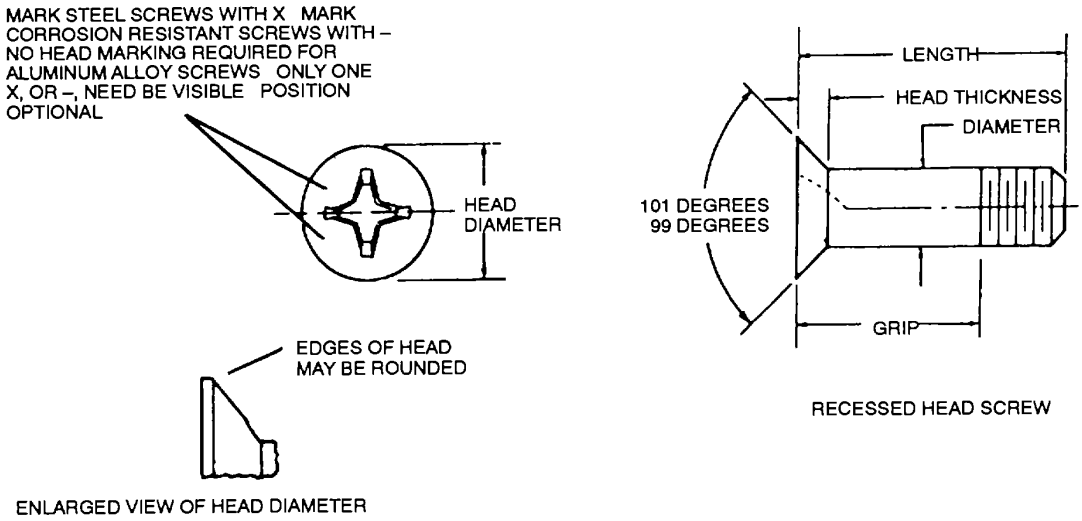

Figure 237. Flat-Head Screws

Downloaded from http://www.everyspec.com

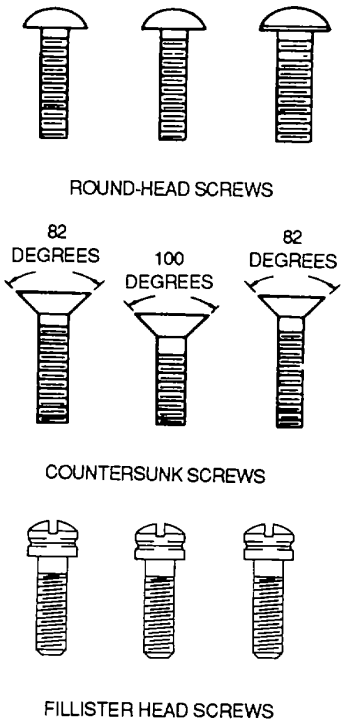

Figure 2-38. Machine Screws

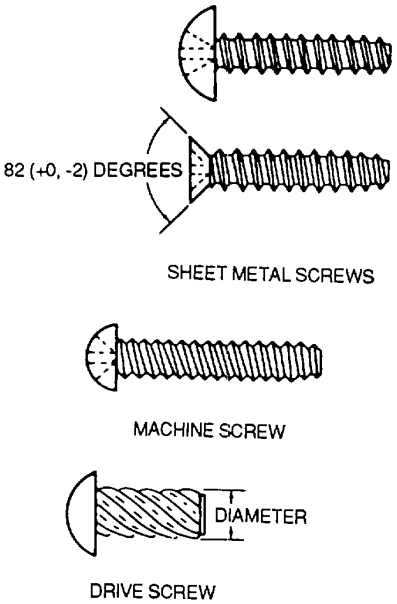

Figure 2-40. Self Tapping Screws

(3) Drive screws. Drive screws, MS21318, as shown in figure 2-40, are plain head, self-tapping screws used as capscrews in the attachment of nameplates in castings or in sealing drain holes in corrosion-proofing tubular structures. These screws differ from other self-tapping screws in that they are not formed to fit screwdrivers and are not intended to be removed after installation. Drive screws are installed by driving the screw into a drilled hole with a hammer.

f. Electrical Screws. Use round-head machine screws, AN508, as shown in figure 2-41, for electrical use in such application as instrument installations where nonmagnetic qualities are desired.

2-6. Clamps. Clamp identification and types used in Army aircraft maintenance are presented in the following paragraphs.

a. Clamp Identification. Clamps are identified as one of the following types.

(1) Loop-type bonding clamp. A plain metal uncushioned clamp, as shown in figure 2-42, which bonds metal tube to the airframe.

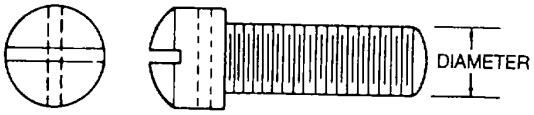

Figure 2-39. Fillister Head Screw

Downloaded from http://www.everyspec.com

(2) Hose clamp. This clamp, as shown in figure 2-43, is used to attach hose to a hose fitting or tube to prevent leakage.

(3) Tube clamp. A tube clamp, as shown in figure 2-44, is a one-or two-piece clamp used with tube-to-tube connections or tube-to-duct connections.

(4) Loop-type support clamp . This clamp, as shown in figure 2-45, is used to support tubing, hose, and cable It is either cushioned or not cushioned

b *Clamp Types*. The AN735, AN742 and MS21919 series clamp loop have been superseded by EAB 700 series clamp loop The AN741 series has been superseded by MS27405 series. The AN737 RM and TW hose clamps are used in aircraft applications on self-sealing hose, non-self-sealing hose, other low pressure lines and for ground applications such as ground support equipment. The MS27405 is a tube-type support clamp which may be in either one or two places. The MS21919 is a cushioned, loop-type support clamp used on metal tubing, hose, and cable.

NOTE

For replacing the uncushioned type clamp, use EAB 700 series clamp, one size smaller, and remove Teflon cushion for correct fit.

2-7. Pins. Metal pins used for securing, safetying, and locking are presented in this paragraph These items include clevis pin, taper pins, safety retaining pins, spring pins, lockpins, hinge pins, and cotter pins.

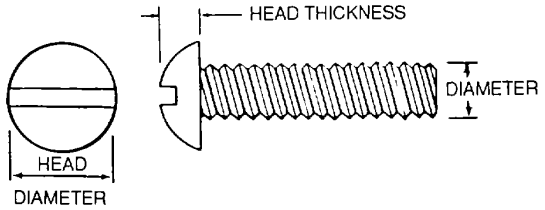

Figure 2-41. Round-Head Machine Screw

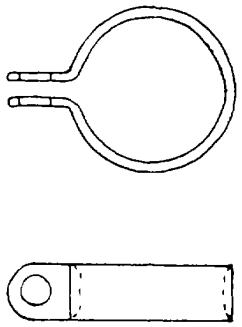

Figure 2-42. Loop-Type Bonding Clamp

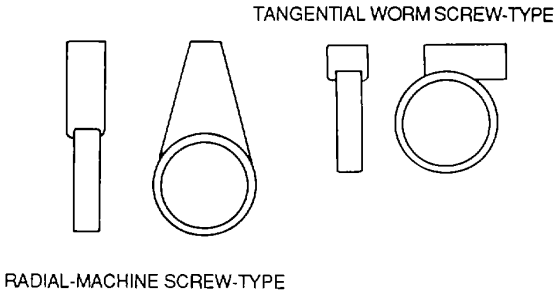

Figure 2-43. Hose Clamps

Downloaded from http://www.everyspec.com

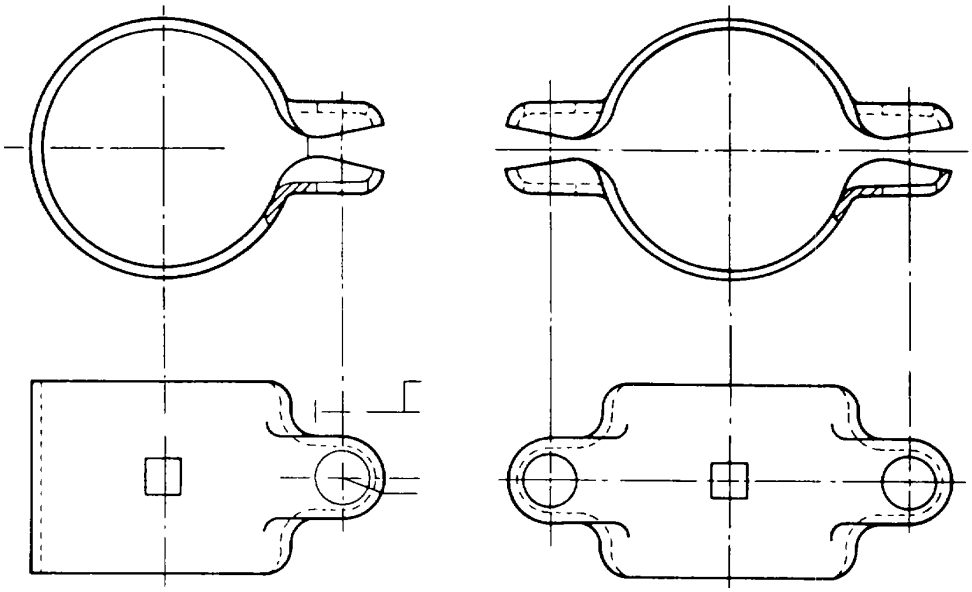

Figure 2-44. Tube Clamps

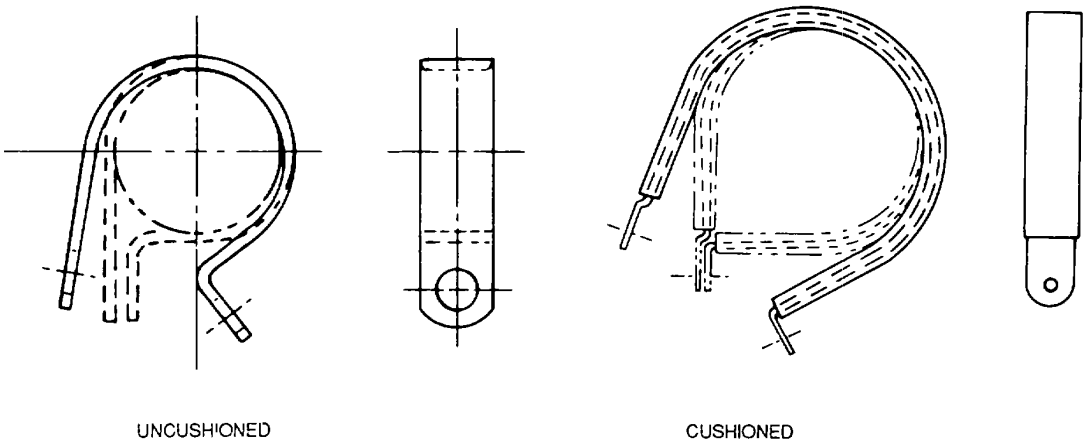

Figure 2-45. Loop-Type Support Clamp

Downloaded from http://www.everyspec.com

a. Clevis Pins. Clevis pins (flat-head), MS20392, as shown in figure 2-46, are usually used with tie rod terminals. This pin may be used in secondary controls not subjected to continuous operation, and where chances of working loose are negligible The pin should be safetied with a cotter pin and installed with the head up, when possible, so the pin will remain in place if the cotter pin fails or works out.

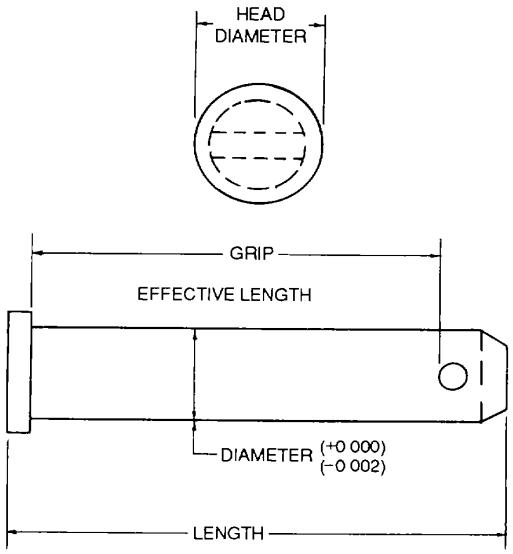

Figure 2-46. Clevis Pin

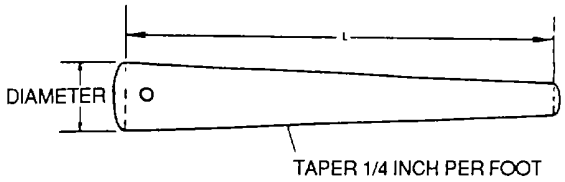

Figure 2-47. Plain Taper Pin

b. Taper Pins. Use taper pins in joints which carry loads where absence of play is essential (Commonly used tapers are as follows Brown and Sharpe taper (1/2 inch per foot), Morse taper (5/8 inch per foot), and American standard (1/4 inch per foot).

(1) Plain taper pins. Plain taper pins, MS24692, as shown in figure 2-47, are drilled at the large end and are usually safetied with lockwire.

(2) Threaded taper pins. Threaded taper pins, AN386, as shown in figure 2-48, are used with taper pin washers, AN975, and shear nuts, AN320 They are safetied with cotter pins, MS24665, or safetied with self-locking nuts, MS21083 (These Brown and Sharpe pins are installed in a standard "B & S" tapered socket.) The pin is set with a light tap from a rawhide or nylon mallet. The small end of the taper is installed flush or not more than .060 inch above the surface of the component. It is permissible to install a large size pin in some cases. Refer to the specific aircraft maintenance manual for maximum allowable size and required torque on the nut

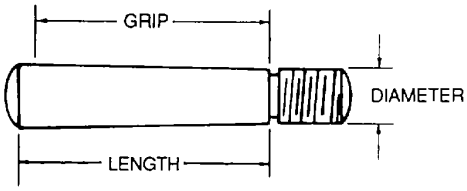

Figure 2-48. Threaded Taper Pin

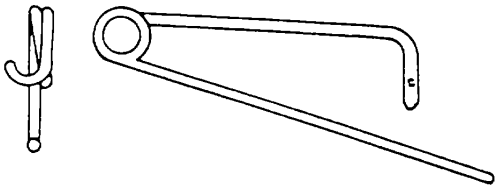

Figure 2-49. Safety Retaining Pins

c. Safety Retaining Pins. Use safety retaining pins, AN416, as shown in figure 2-49, to secure Items such as clevis pins, MS20392, small chains, checklists, and other similar items.

d. Spring Pins. The spring pin, as shown in figure 2-50, is a slotted or coiled and chamfered pin, heat-treated to achieve optimum toughness, resilience, and shear strength Spring pins are stronger than mild carbon steel straight pins, taper pins, or grooved pins of equivalent sizes.

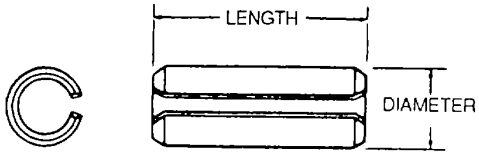

Figure 2-50. Spring Pin

Downloaded from http://www.everyspec.com

(1) Principle of operation. Spring pins are manufactured with the diameter greater than the holes in which they are to be used. The spring pin is compressed as it is driven into the hole, and it exerts continuous spring pressure against the sides of the hole to prevent loosening by vibration. Spring pins require no other means of securing, and can be used inside one another to increase strength.

NOTE

Exercise care when using these pins, as performance depends entirely on the fit, and the permanence of the fit under vibration or repeated load conditions (especially in soft materials, such as aluminum alloys and magnesium) has not been established. They shall not be used in an aircraft component or system where the loss or failure of the pin might endanger the safety of flight of the aircraft.

(2) Application. The spring pin is designed for use in double shear applications. The proper bearing factors for double shear application shall be established for the material in which the spring is being used; that is, whether the material is heat-treated steel, corrosion resistant steel, aluminum alloy, or magnesium The following precautions will be observed when determining the appropriate use of spring pins:

- Spring pins should not be mixed with other structural fasteners in the same joint. These pins, for primary structural applications, should be used only where there will be no rotation or relative movement under load of the parts to be joined.
- When temperatures are above 500°F (338°C), steel spring pins shall not be used. Corrosion-resistant steel spring pins shall not be used when temperatures are in excess of 700°F (371°C).
- The spring pin shall not be used as a substitute for a cotter pin nor in applications subjected to shock loading unless the installation has been tested for fatigue life and has proven satisfactory.
- When the spring pin is used in a clevis joint, it is recommended that the pin be held by the outer members of the unit for maximum efficiency and reduced maintenance.

(3) Reuse. Spring pins may be reused if a careful inspection reveals no deformation of the pin or hole. Be careful to observe that the hole has not enlarged or deformed preventing proper functioning of the spring pin. Where hole misalignment results in the pin gap closing, or necessitates excess inserting force, the spring pin shall not be used.

e. Lockpins. There are two types of lockpins, as shown in figure 2-51. Both are installed by placing straight section of pin in hole of item to be locked and continuing to insert the straight portion of the pin until the curves or spring portion of the pin latches over the item to be safetied Lockpins are normally used to secure items such as fuel and oil caps.

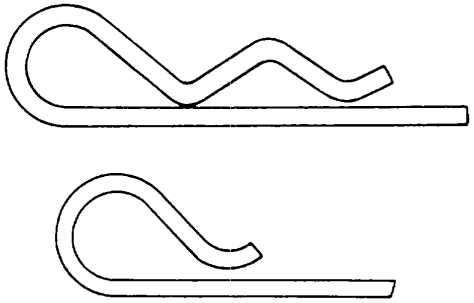

Figure 2-51. Lockpins

f. Hinge Pins. Use hinge pins, MS20253, to join hinges, MS20257, in such locations as cowling access doors. These pins are peened on ends as a method of securing. Treat ends with zinc chromate primer, Federal Specification TT-P-1757, after peening to prevent corrosion.

g. Cotter Pins. Cotter pins are used to secure bolts, nuts, pins, screws, and in any other applications where such locking is required. Figure 2-52 illustrates cotter pin designs.

Downloaded from http://www.everyspec.com

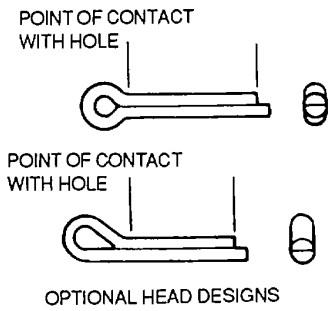

Figure 2-52. Cotter Pins

2-8. Rivets. Refer to Chapter 7, TM 1-1500-204-2310, for the application of common rivets and special rivets.

a. Common Solid Shank Rivets. Common solid shank rivets are identified by head style and markings.

(1) Identification. General identification information for standard MS rivets is shown in figure 2-53

(2) Head styles. The universal head and countersink head are the two main head styles. Each is explained in the following paragraphs.

(a) Universal head. Use universal-head rivets in interior and exterior locations. Use them in interior of aircraft except when clearance for adjacent members is required. Use them on exterior aircraft surfaces where flush riveting is not required. This avoids the necessity of dimpling or countersinking.

(b) Countersunk head. Use countersunk head rivets on exterior surfaces to provide a smooth aerodynamic surface or to develop a high shear strength, as in case of dimpled sheets. The dimpled joint and the protruding head riveted joint are stronger than the machine countersunk rivet joint. Machine countersinking, with dimpled outer sheet, still allows the sheet to carry a shear load comparable to dimpling. Use these rivets in aircraft interior where universal-head rivets cannot be used.

MATERIAL	HEAD MARKING	MS MATERIAL CODE
1100	PLAIN	A
2117	DIMPLED	AD
2017	RAISED TEAT	D
2024	RAISED DOUBLE DASH	DD
5056	RAISED CROSS	B
CARBON STEEL	RECESSED TRIANGLE	
CORROSION-RESISTANT STEEL	PLAIN	F
MONEL, FEDERAL SPECIFICATION QQ-N-281	RAISED DOUBLE TEATS	M
COPPER, FEDERAL SPECIFICATION QQ-W-341	PLAIN	CU

Figure 2-53. Rivets

Downloaded from http://www.everyspec.com

b. Materials Used in Fabrication. Rivets used in aircraft construction are generally fabricated from aluminum alloy However, in special cases, Monel, corrosion-resistant steel, mild steel or iron, and copper rivets are used. Except for unusual conditions, rivets should be used only for the purposes intended This intention is usually indicated by rivet usage in the original fabrication of the aircraft. The selection of rivet materials for any application is dependent upon usage, corrosion resistance, and strength.

c. General Usage. Aluminum, steel, and copper rivets are generally used on Army aircraft.

(1) Aluminum rivets. There are various aluminum rivets used for different applications. Each is explained in the following paragraphs.

(a) 1110 rivet Use 1100 rivet, made from pure aluminum, for riveting nonstructural parts fabricated from the softer alloys (1100, 3003, and 5052).

(b) 2117-T4 rivet. This rivet is most commonly used in aluminum alloy structures Its main advantage lies in the fact that it may be used in the condition received without any further treatment.

(c) 2017-T4 and 2024-T4 rivets. Use these rivets in aluminum alloy structures where strength higher than that of the 2117-T4 rivet is required. These rivets are generally used in sizes 3/16-inch diameter and larger.

(d) 5056 rivets. Use this rivet for riveting magnesium alloy structures because of its corrosion resistant qualities No other rivets should be used for this purpose, except under extreme conditions.

(2) Steel rivets. Mild steel rivets are used primarily in riveting steel parts Do not use galvanized rivets on steel parts subjected to high temperature Corrosion-resistant steel rivets are used primarily in riveting corrosion-resistant steel parts such as firewalls, exhaust stack bracket attachments, and similar structures. Monel rivets are used in special cases for riveting high nickel-steel alloys. Monel rivets may be used interchangeably with corrosion-resistant steel rivets, and are easier to drive. Corrosion-resistant steel rivets are preferable in corrosion-resistant steel parts.

(3) Copper rivets. Copper rivets are used for riveting copper alloys, leather, and other nonmetallic materials This type rivet has only limited usage in aircraft.

CAUTION

Dangerous corrosion will result with the use of dissimilar metals such as steel, corrosion resistant steel, monel, copper or Iron, in riveting aluminum structures Such applications will only be made under emergency conditions. Rivets will be coated with zinc chromate primer Federal Specification TT-P1757 before installation of rivet, another coat of zinc chromate primer will be applied. Proper replacement will be made as soon as materials are available.

d Corrosion Resistance. Corrosion resistance is generally considered adequate when the rivet material is the same, or almost the same type as that of the structure being riveted, provided the proper anticorrosion surface treatment has been applied An example of this is the use of anodized 2117-T4, 2017-T4 and 2024-T4 rivets to attach any aluminum alloy structure without producing adverse corrosion effects.

e. Strength. For structural application, strength of the replacement rivet is of primary importance. Do not make replacements with rivets of lower strength material unless the difference in strength is made up by the use of a larger rivet For example, a rivet of 2024-T4 aluminum alloy will not be replaced by one made of 2117-T4 or 2017-T4 aluminum alloy unless the next larger size is used. Use next larger size 2117-T4 rivet to replace a 2017-T4 rivet Factors which effect the interchangeability of rivets with respect to head styles are given in paragraph 2-8a.

f. Heat Treatment.. For specific details in the heat treatment of metals used in rivets, refer to MIL-H6875 and MIL-H-6088. Do not drive 2024-T4 rivets in a hardened condition. These rivets must be taken within 20 minutes after quenching to avoid cracking, unless they are held at low temperatures They may be held for approximately 2 weeks when stored in dry ice, or for 24 hours when stored in ordinary ice. They may also be reheated-treated repeatedly without injury, provided treatment is carefully and properly performed. The number of reheat treatments should be controlled on the basis of proper workability after repeated reheat treatments.

Downloaded from http://www.everyspec.com

g. Substitution and Interchangeability. Substitution of rivets generally depends on material, size, and head style. Material considerations must be followed in substituting one rivet material for another. Other factors which must be considered in substitution are described in the following paragraphs

(1) Protruding-head rivets. All protruding-head rivets can be replaced by universal-head MS20470 rivets

(2) Countersunk-head rivets. Countersunk-head rivets should be replaced by rivets of the same type and degree of countersink. When the required countersunk-head rivets are not available, a raised head rivet may be driven from the opposite side and upset into the countersink. Use care in this operation to keep the flat surface of the tools parallel to the work Rivet length should be such that both the hole and the countersink are completely filled. When this is impractical, the drilled out rivet head may be used as a washer and a universal-head rivet inserted and driven in the normal manner in such cases, extreme care must be exercised to drill the hole in the center of the countersunk rivet head.

NOTE

The procedures outlined above should be confined to interior work, and should not be used in exterior applications on flush-riveted skin surfaces.

(3) Solid shank rivets. Cadmium-or zinc-plated steel standard bolts, or NAS structural screws, may be used to replace standard solid shank rivets only when the proper rivets or riveting equipment are not available in such cases, steel bolts or screws of the same size as the replaced rivets are adequate for replacing any type rivet Observe the following precautions:

- Obtain a close fit in such installation.
- Rapid deterioration is experienced by zinc-plated bolts subjected to high temperatures; therefore, zinc-plated bolts are not to be used in place of corrosion-resistant steel rivets where temperatures over 700°F (371°C) are to be encountered.
- Lowering of corrosion resistance is experienced by cadmium-plated bolts subjected to high temperature, therefore, cadmium-plated bolts are not to be used in place of corrosion-resistant steel rivets where temperatures over 400°F (204°C) are to be encountered.
- Countersunk-head screws may be used to join thin dimpled sheets with threads in bearing, since the load carried from sheet to sheet through the dimples Imposes a load on the screw in tension rather than in shear.

h. Hi-Shear Rivets. Hi-shear (pin) rivets, as shown in figure 2-54, are essentially threadless bolts which are inserted like rivets Each rivet consists of two parts a stud and a collar. The stud is made of 4130 alloy steel, or equivalent, heat-treated to 125,000 to 150,000 psi, and cadmium-plated The collar is anodized 2117-T4 aluminum alloy. The installed rivet can be readily identified by the presence of the attached collar rather than the ordinary formed head of the standard rivets Use Hi-shear rivets in shear applications only As the shear strength of the steel is considerably greater than either the shear bearing strength of aluminum alloys, these special rivets are used to advantage only in the thicker sheet gauges Never use Hi-shear rivets where the grip length is less than the shank diameter (3/16-inch for smallest available rivet). Use the 100-degree countersunk type where flush surfaces are desired Hi-shear rivets may be replaced with close tolerance bolts of the same material, strength and diameter, where absolutely necessary. Use flush-headed bolts for flush-headed rivets and protruding head bolts for protruding head rivets. The bolt thread must not extend into the material.

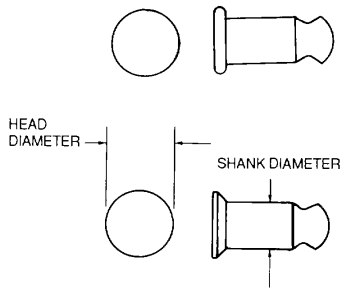

Figure 2-54. Hi-Shear Rivets

Downloaded from http://www.everyspec.com

i. *Blind Rivets*. Blind rivets are designed for difficult riveting in places where access is possible to only one side of the work CherryMAX, Huck, and Olympic rivets are explained in the following paragraphs.

(1) *CherryMAX rivets* These rivets, as shown in figure 2-55, are installed by one operator using a special gun which exerts a pulling force to form a head on the blind side of the rivet. The CherryMAX rivet can be used for all repair of Army aircraft involving the use and application of blind rivets The CherryMAX rivet should not be used to replace solid rivets unless absolutely necessary. Properly installed CherryMAX rivets may be used to replace both 2117-T4 and 2017T4 solid rivets size for size Shank and grip lengths of CherryMAX rivets are designed by dash numbers following the series number. CherryMAX rivets are qualified to MIL-R007885C or rivet identification Refer to tables 2-10 and 2-11.

(2) *Cherrylock rivets*. Cherrylock rivets NAS 1398 and 1399 and NAS 1738 and 1739, as shown in figure 2-56, differ from MS20600 and MS20601 rivets in that they have a mechanically locked stem. This stem is designed to break flush to eliminate stem trimming after installation The NAS 1738 and 1739 are designed for use in thin and dimpled sheets, where a large head is needed. The NAS 1398 and 1399 are designed for thicker sheet needs.

(3) *Huck rivets* Huck rivets consist of two parts a hollow sleeve made of 5056-H14 aluminum alloy having a universal or countersunk head with a conical recess and locking collar at the other end, and a pin made of 2024-T26 aluminum alloy which is pressed into the sleeve The pin is provided with an extruding angle and land to expand the sleeve for hole filling, a breakneck groove, and a head The pull grooves on the protruding end of the pin fit the jaws of the rivet tool. The rivet is shown in figure 2-57.

NOTES

CHERRYMAX CONSISTS OF FOUR COMPONENTS ASSEMBLED AS A SINGLE UNIT

1 A FULLY SERRATED FASTENER STEM WITH BREAK NOTCH, SHEAR-RING AND PLUG SECTION

2 A LOCKING COLLAR THAT PROVIDES A MECHANICAL LOCK TO THE STEM

3 THE FASTENER SLEEVE WITH A LOCKING COLLAR DIMPLE TO RECEIVE THE LOCKING COLLAR

4 THE CHERRYMAX DRIVING ANVIL, WHICH ENSURES FLUSH STEM BREAKS AND A FLUSH INSTALLED COLLAR AT ALL TIMES

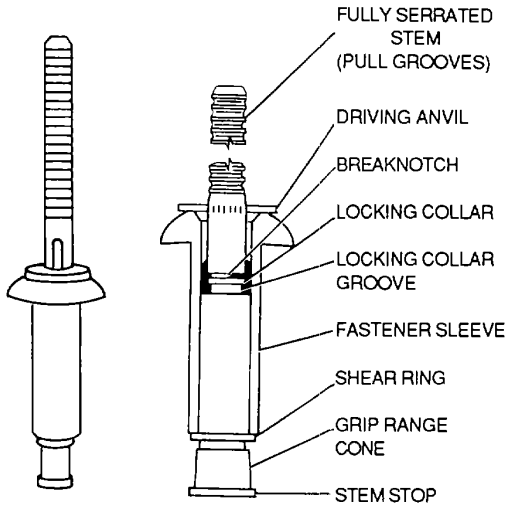

Figure 2-55. CherryMAX Rivet

Downloaded from http://www.everyspec.com

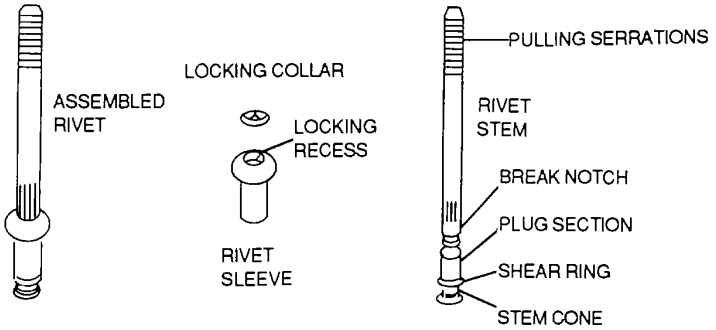

NAS 1738 AND 1739

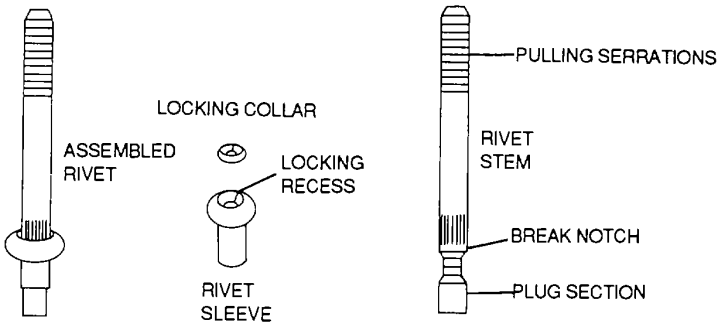

NAS 1398 AND 1399

Figure 2-56. Cherrylock Rivets

Downloaded from http://www.everyspec.com

Table 2-10. CherryMAX Numbering System

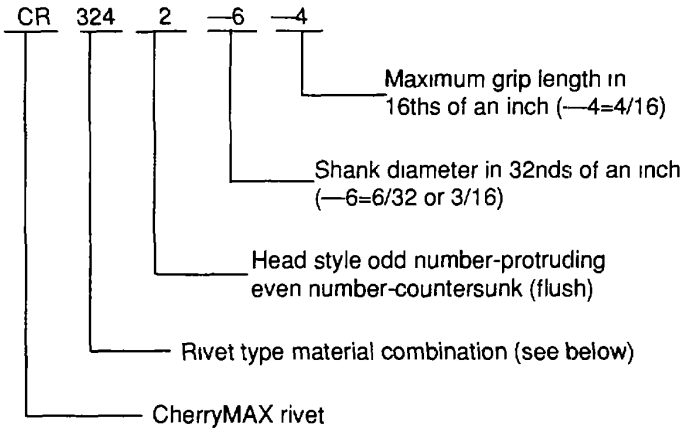

Table 2-11. CherryMAX Cross Reference (Part Number/Military Standard Part Number)

CherryMAX part number	Head style	Diameter series	Sleeve material	Stem material	Military standard part number[1]
CR3213	Protruding	Nominal	Alum 5056	Alloy Steel	M7885/2
CR3212	Flush	Nominal	Alum 5056	Alloy Steel	M7885/3
CR3523	Protruding	Nominal	Monel	15-7 CRES	M7885/4
CR3524	Flush	Nominal	Monel	15-7 CRES	M7885/5
CR3243	Protruding	Oversize	Alum 5056	Alloy Steel	M7885/6
CR3242	Flush	Oversize	Alum 5056	Alloy Steel	M7885/7
CR3553	Protruding	Oversize	Monel	15-7 CRES	M7885/8
CR3552	Flush	Oversize	Monel	15-7 CRES	M7885/9
CR3223	Protruding	Nominal	Alum 5056	15-7 CRES	M7885/10[2]
CR3222	Flush	Nominal	Alum 5056	15-7 CRES	M7885/11[2]
CR3224	NAS1097	Nominal	Alum 5056	15-7 CRES	M7885/12[2]
CR3245	Unisink	Oversize	Alum 5056	Alloy Steel	M7885/13[2]
CR3255	Unisink	Oversize	Alum 5056	15-7 CRES	M7885/14[2]
CR3853	Protruding	Oversize	Inconel 600	Inconel X750	M7885/15[2]
CR3852	Flush	Oversize	Inconel 600	Inconel X750	M7885/16[2]

[1] Diameter and grip dash number are the same for Cherry and military standard part numbers.

Example. M7885/4-4-2 and CR3523-4-2

[2] These numbers are pending approval as of 17 July 1985.

Downloaded from http://www.everyspec.com

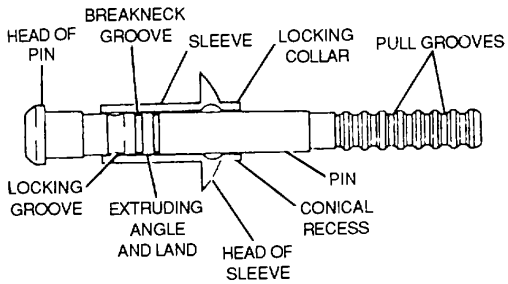

Figure 2-57. Huck Rivet

(a) Huck rivet allowable load. Loads allowable for Huck rivets are compared to those of solid rivets of the same shear strength The composite ultimate shear strength of the 5056-H14 sleeve and 2024-T36 pin exceeds 38,000 psi, based on standard rivet hole diameters, and over 28,000 psi tensile strength The positive mechanical lock definitely eliminates any possibility of the pin working out under any conditions of vibration or fatigue loading, regardless of whether rivet has been driven in a properly sized or oversize hole in thin sheets, shear strength will be different for each thickness. On countersunk-head rivets, shear strength is approximately the same as for protruding-head rivets when used in dimpled sheets in machine countersunk sheets, this value will be considerably lower.

(b) Huck rivet identification. Use huck rivet part number to completely identify the rivet. A typical example of a Huck rivet part number is P5C. The first selecter (P) of the part number indicates head type as a universal-head (MS20470) rivet. The numeral (5) following the first letter indicates shank diameter in 1/32 inch, thus, 5 indicates a 5/32-inch diameter shank. The last letter (C) is the grip code letter which is stamped on the head of each rivet pin. The letter indicates the grip range, which in this case is 0.077 inch to 0.107 inch. Another example of identification is 100V6E 100V indicates a 100-degree counter sunk head (MS20426). The numeral 6 indicates that the shank is 6/32 or 3/16 inch in diameter, and the letter E represents a grip range from 0 236 inch to 0.072 inch.

(4) Olympic rivets. The rivets consist of a hollow manufactured rivet and stem. They are similar in operation to Huck rivets. The part number is used to completely identify the rivet. A typical example of an Olympic rivet part number is RV200-4-2. The RV indicates an Olympic blind rivet, while the numeral 2 describes the rivet as being self-plugging. The first 0 indicates that the rivet is made of 2117 aluminum alloy; the number 5 here would identify the material as 5056 aluminum alloy for use on magnesium surfaces. The second 0 describes the head style as universal, the numeral 1 in this position would describe a 100-degree countersunk head. The first dash number is the rivet shank diameter measured in 1/32-inch increments, and the second dash number is the grip length, which denotes maximum thickness of material in which the rivet can be used, this measurement is made in 1/6-inch increments. The Olympic rivet, part number RV200-4-2, is now identified as an Olympic blind rivet, self-plugging, made of 2117 aluminum alloy with a universal head. It has a 1/8-inch shank and a 1/8-inch grip.

j. Rivnuts. Rivnuts are internally threaded and counterbored tubular rivets that can be headed blind in such applications as the attachment of deicing boots. These special rivets can be made of either 6053 aluminum alloy, carbon steel, alloy steel or corrosion resistant steel, with either flat or countersunk heads and open or closed ends, as shown in figure 2-58. Each rivet type is available in various thread sizes. An example of a typical part number is: NAS 1329H3K130L. NAS 1329 indicates the basic standard to which a rivnut conforms. The letter between the military specification number and the first dash number indicates material type and finish ("A" aluminum alloy, "S" for carbon steel, "H" for alloy steel, and "C" for corrosion-resistant steel). The first dash number, after the material type, indicates machine screw size of the thread A dash following the machine screw size indicates open end keyless, "B" indicates closed end keyless, "K" indicates open end with a key, "KB" indicates closed end with a key. The final dash number indicates grip range in thousands of an inch. The presence of an "L" at the end of the part number indicates a thread locking feature.

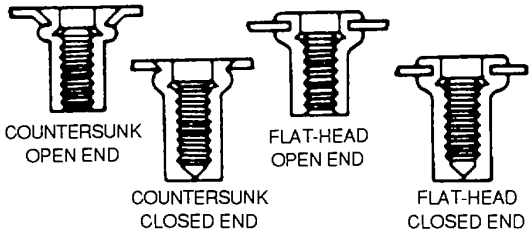

Figure 2-58. Rivnut Types

Downloaded from http://www.everyspec.com

2-9. Fasteners. Refer to Chapter 7, TM 1-1500-20423-10, for the application of cowling fasteners and special fasteners.

a. Dzus Fasteners. The Dzus fastener consists of a stud, a grommet, and a receptacle. The stud and grommet installation is shown in figure 2-59 and figure 2-60 shows a typical Dzus fastener installation.

b. Camloc. Each Camloc fastener consists of three parts: cam collar, grommet, and stud assembly, as shown in figure 2-61.

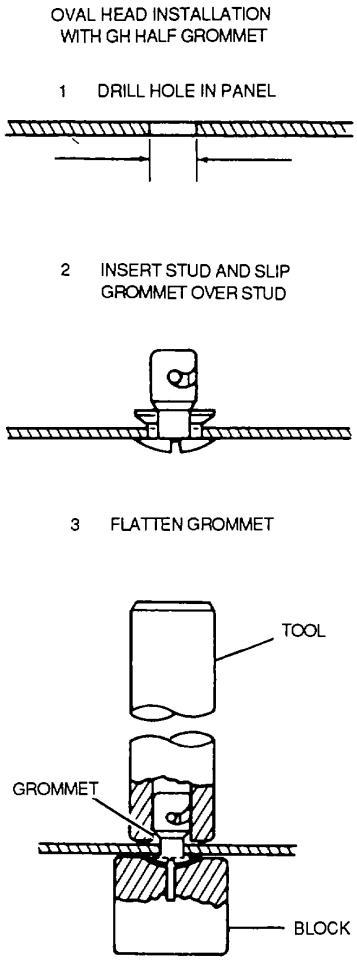

Figure 2-59. Stud and Grommet Installation

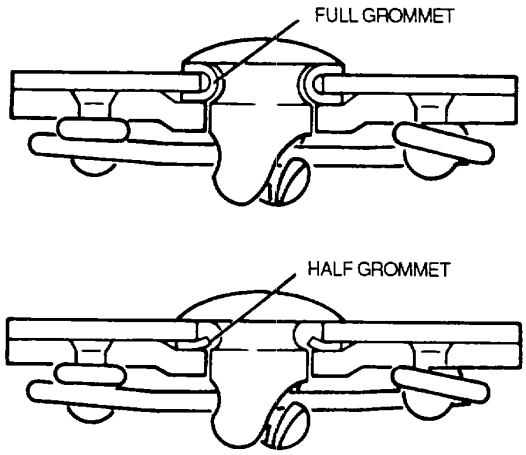

Figure 2-60. Dzus Fastener

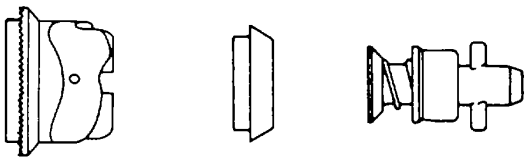

Figure 2-61. Camloc Fasteners

(1) Cam collar. The cam collar consists of an aluminum alloy forging mounted in a stamped sheet metal base. It is permanently attached to the structure by means of a dimpled or countersunk hole which prevents the collar from extending above the mounting surface.

(2) Grommet. The grommet is a flanged ring made to fit into a dimple in the removable member of an assembly.

(3) Stud assembly. The stud assembly consists of a stud, cross pin, spring, and a spring clip. This factory-assembled component shall not be disassembled. The assembly is inserted into the grommet by compressing the spring. The spring must be compressed in order to get the stud assembly out of the grommet.

c. Dill Lok-Skru. Dill Lok-Skru as shown in figure 2-62 is a cowling fastener used for quick removal and replacement.

Downloaded from http://www.everyspec.com

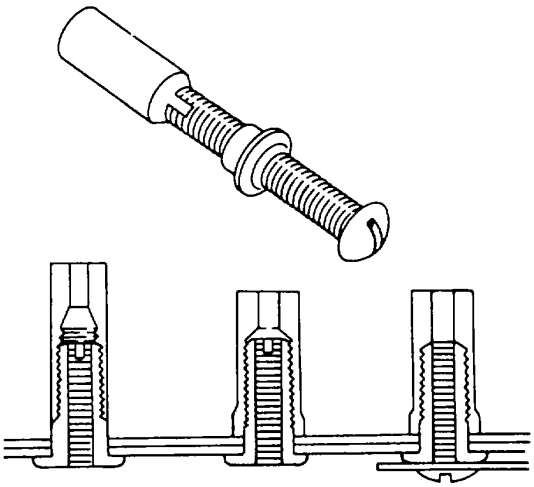

Figure 2-62. Dill Lok-Skru Fastener

d. Snap and Curtain. Snap and curtain fasteners, MS27977 MS27986 are identified by part number.

e. Interlocking Slide. Interlocking slide fasteners, commonly called zippers, are identified in table 2-12.

2-10. Studs. The type studs used in aircraft structure are coarse thread studs, fine thread studs, stepped studs, necked stepped studs, wrench pad necked stepped studs, lockring studs, and self-tapping lockring studs. Studs are available either drilled or undrilled on the nut end. Figure 2-63 shows some stud types. The type studs used in aircraft structures/components are course thread studs.

a. Removal of Bent, Damaged, or Broken Studs. Remove bent or damaged studs as follows:

(1) Place adapter, as shown in figure 2-64, in stud remover.

(2) Drive adapter down over threads of stud.

(3) Remove studs by turning stud remover with a wrench. If threads in parent material pick up and stud remover cannot be turned, remove stud remover from adapter.

(4) Place stud remover block and puller on adapter and remove adapter from stud.

(5) Cut off stud close to parent material.

Table 2-12. Interlocking Slide Fasteners (Zipper)

Size	Type	Grade	Description
0			Light service
1			Light-medium service
2			Medium service
3			Medium-heavy service
	A		Nonseparating, single action
	B		Separating, single action
	C		Nonseparating, single action with bridge stop
	D		Separating, single action, quick detaching
	E		Nonseparating, double action, center opening
	F		Nonseparating, double action with bridge stop
	G		Separating, double action, end opening
	S		Standard nonlocking
	L		Locking
		I	Brass
		II	Zinc alloy
4			Heavy service

Downloaded from http://www.everyspec.com

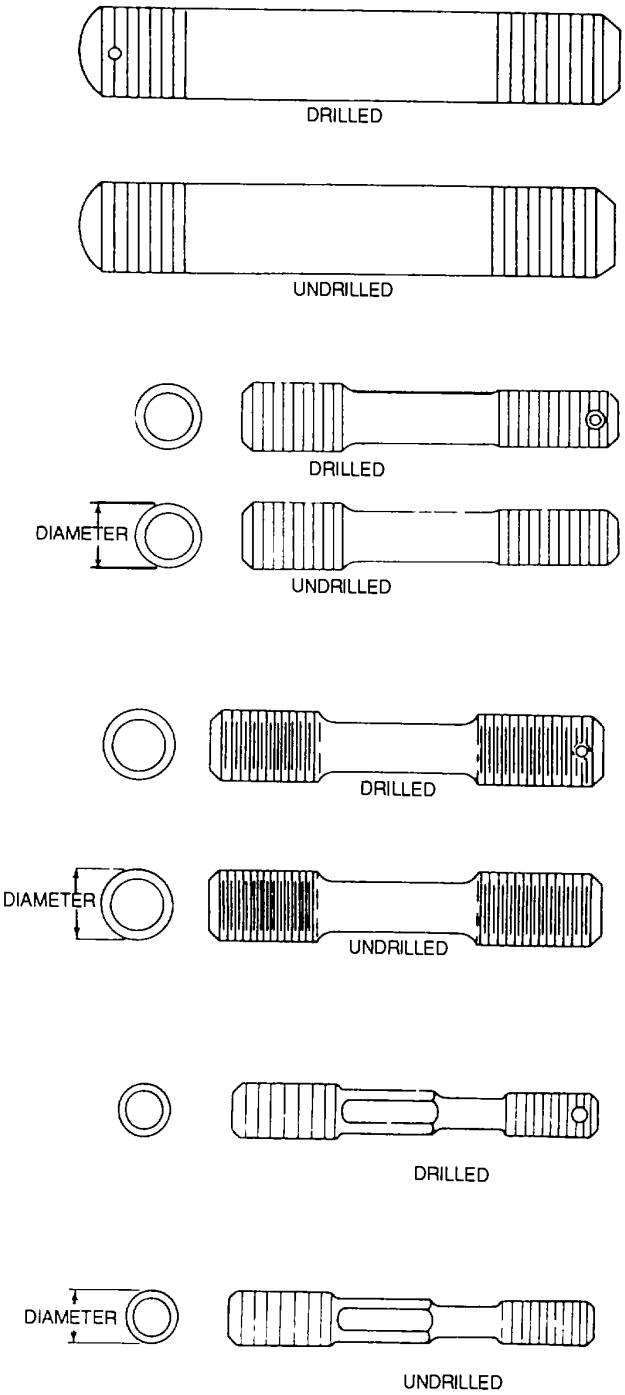

Figure 2-63. Stud Types

Downloaded from http://www.everyspec.com

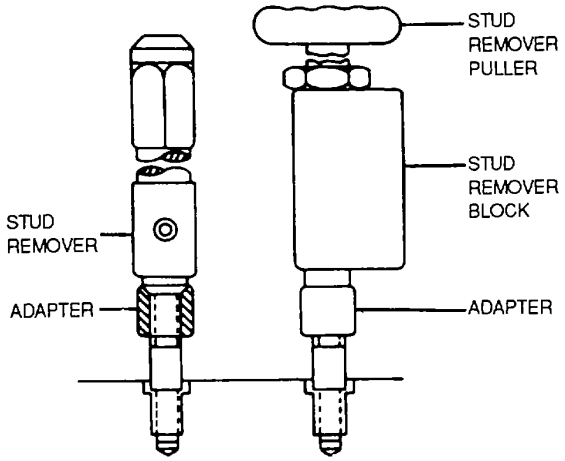

Figure 2-64. Stud Removal

NOTE

A drill jig recommended for moderate use when drilling broken studs where it is impractical to have a complete set of stud replacement jigs.

(6) Drill a pilot hole in stud, using 1/8-inch diameter by 5-1/8 inch drill

(7) If stud has a diameter of 7/16 inch or greater, enlarge pilot hole in stud using 1/4-inch diameter drill.

(8) Redrill hole in stud, using proper drill for stud size.

(9) Select proper removing tool for stud size

(10) Drive removing tool into drilled hole in stud.

(11) Remove stud, using tap wrench

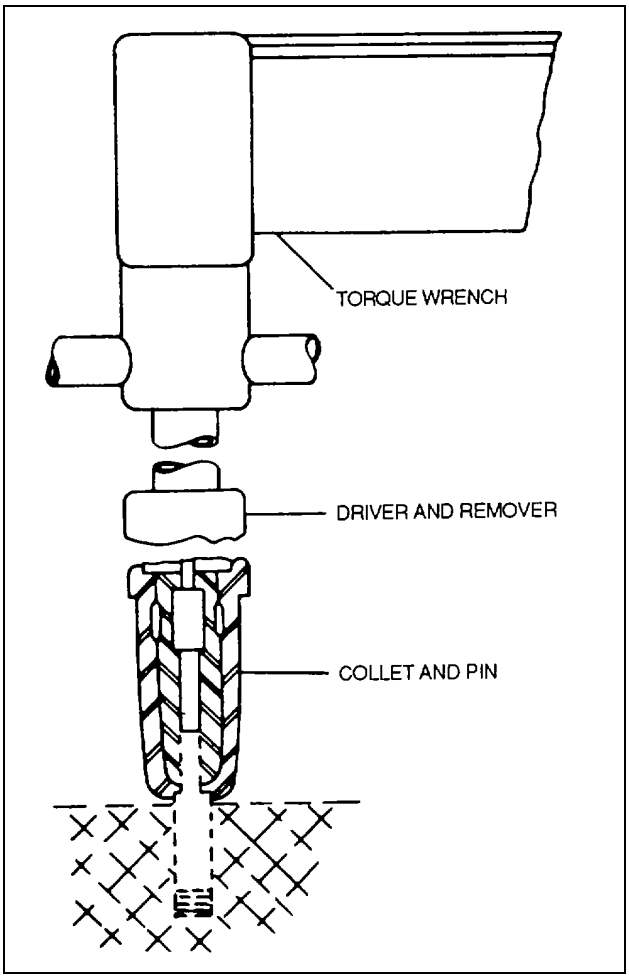

Figure 2-65. Stud Installation

b. *Installing New Stud*. The procedures for retapping and installation are as follows.

CAUTION

Excessive amounts of lubricants shall be avoided, especially in blind holes Use only sufficient lubricant to cover sides of threads with a thin coating Excessive lubricant can prevent proper stud installation.

(1) When replacing a stud with another stud of the same size, run proper size tap into hole to clean up threads without removing any metal.

(2) When retapping for next oversize stud, use proper tap for die-cut studs. If stud cannot be driven at torque specified in applicable aircraft maintenance manual, retap with tap for rolled thread studs of same size.

NOTE

Unless otherwise specified, antiseize compound MIL-T-83483 shall be applied in tapped holes.

(3) Select proper size stud and install with driver and remover, and collet and pin, as shown in figure 2-65

(4) Use torque wrench to determine torque at required height of stud.

Downloaded from http://www.everyspec.com

(5) If correct torque is not obtained at required stud height, remove stud with driver and remover and install another stud. Refer to applicable aircraft maintenance manual for correct torque values.

2-11. Helical Thread Inserts. Helical inserts are precision coils of 18-8 stainless steel wire cold worked to a tensile strength of 200,000 psi (Rockwell C 43-50), diamond shaped, and agree with AMS 7245D and MIL1-8846 specifications. Each insert has a driving tang with a notch to facilitate removal of the tang after the insert is screwed into a helical tapped hole They are used as screw thread bushings. In addition to being used to restore damaged threads, they are used in the original design of missiles, aircraft engines, and all types of mechanical equipment and accessories to protect and strengthen tapped threads in light materials, metals, and plastics, particularly in locations which require frequent assembly and disassembly, and/or where a screw-locking action is desired.

a. Types. Helical standard and screw-lock inserts are identical except for a number of flats formed on the middle coil or coils of the screw-lock insert Helical screw-lock inserts (dyed red) are used to secure screws and bolts against loosening under impact and vibration in both ferrous and nonferrous materials, and conform to MIL-I-8846 They eliminate lockwiring, locknuts, and other supplementary locking devices. Inserts are available in unified coarse and fine thread sizes in screw thread and screw-lock types, stud-lock, oversize and twinsert, and tapered pipe thread sizes Helical thread inserts can be identified by referring to tables 2-13, 2-14.

b Selection of Helical Insert. Hole size determination and insert selection are outlined in the following paragraphs.

(1) Hole size determination. Determine the original tapped hole thread size, whether national coarse or fine, and whether a standard screw thread or screw lock type of insert is required Next, determine the length of damaged or stripped threads to be replaced and whether the application is in a through hole or blind hole A through hole requires that the driving tang be removed This is not necessary in a blind hole, provided the length of insert permits the tang to clear the point of the screw when the parts are assembled Use only stainless steel inserts unless otherwise instructed.

(2) Insert selection. Use the original nominal thread size and length of tapped hole, as determined in paragraph a above, to select the proper insert and insert tool from tables 2-13 through 2-15. The proper insert length for blind holes will permit full screw engagement without interference if the driving tang is retained. Because all inserts are notched for tang break-off, the tang should be removed if possible.

CAUTION

Use only bolts with correct grip lengths for thickness of work to be held and with enough thread length to assemble with full thread engagement into screw lock insert (e.g. , an AN single-digit bolt should not be used with inserts of lengths equal to one and 1/2 to two times bolt size).

NOTE

An insert assembled in a blind hole, with the tang retained, should be longer than the required bolt thread engagement by 1/2 the nominal thread diameter or bolt size.

c. Insert Tolerance. The same insert is used for all classes of thread fits or thread tolerance ranges. Each variation in fit is determined by the tolerance of the tapped thread used. The free insert, before assembly, has a larger diameter than the tapped hole which receives the insert. The tapped hole reduces the insert in diameter as It is assembled. This makes the insert conform to tapped hole tolerance or class of fit. This snug fit locks the insert in position.

d. Inspection Criteria for Helical Springs. Inspection criteria for all extension helical springs is as follows:

- No breaks or cracks allowed Chafing in hook area shall not exceed 0.010 in depth.
- Coils that have any corrosion pits shall be replaced.
- Coils shall not be sprung; coils must be tight against each other.

Downloaded from http://www.everyspec.com

Table 2-13. Helical Insert Part Numbers

Nominal size	Nominal length	Part number Notched	Unnotched
8-32	.164	MS122079	MS122099
8-32	.246	MS122119	MS122139
8-32	.328	MS122159	MS122179
8-32	.410	MS122199	MS122219
8-32	.492	MS122239	MS122259
10-24	.190	MS122080	MS122100
10-24	.285	MS122120	MS122140
10-24	.380	MS122160	MS122180
10-24	475	MS122200	MS122220
10-24	.570	MS122240	MS122260
1/4-20	1/4	MS122081	MS122101
1/4-20	3/8	MS122121	MS122141
1/4-20	1/2	MS122161	MS122181
1/4-20	5/8	MS122201	MS122221
1/4-20	3/4	MS122241	MS122261
5/16-18	5/16	MS122082	MS122102
5/16-18	15/32	MS122122	MS122142
5/16-18	5/8	MS122162	MS122182
5/16-18	25/32	MS122202	MS122222
5/16-18	15/16	MS122242	MS122262
3/8-16	3/8	MS122083	MS122103
3/8-16	9/16	MS122123	MS122143
3/8-16	3/4	MS122163	MS122183
3/8-16	15/16	MS122203	MS122223
3/8-16	1-1/8	MS122243	MS122263
7/16-14	7/16	MS122084	MS122104
7/16-14	21-32	MS122124	MS122144
7/16-14	7/8	MS122164	MS122184
7/16-14	1-3/32	MS122204	MS122224
7/16-14	1-5/16	MS122244	MS122264

Downloaded from http://www.everyspec.com

Table 2-13. Helical Insert Part Numbers - CONT

Nominal size	Nominal length	Part number Notched	Unnotched
1/2-13	1/2	MS122085	MS122105
1/2-13	3/4	MS122125	MS122145
1/2-13	1	MS122165	MS122185
1/2-13	1-1/4	MS122205	MS122225
1/2-13	1-1/2	MS122245	MS122265
9/16-12	9/16	MS122086	MS122106
9/16-12	27/32	MS122126	MS122146
9/16-12	1-1/8	MS122166	MS122186
9/16-12	1-15/32	MS122206	MS122226
9/16-12	1-11/16	MS122246	MS122266
5/8-11	5/8	MS122087	MS122107
5/8-11	15/16	MS122127	MS122147
5/8-11	1-1/4	MS122167	MS122287
5/8-11	1-9/16	MS122207	MS122227
5/8-11	1-7/8	MS122247	MS122267
3/4-10	3/4	MS122088	MS122108
3/4-10	1-1/8	MS122128	MS122148
3/4-10	1-1/2	MS122168	MS122188
3/4-10	1-7/8	MS122208	MS122228
3/4-10	2-1/4	MS122248	MS122268
7/8-9	7/8	MS122089	MS122109
7/8-9	1-5/16	MS122129	MS122149
7/8-9	1-3/4	MS122169	MS122189
7/8-9	2-3/16	MS122209	MS122229
7/8-9	2-5/8	MS122249	MS122269
1-8	1	MS122090	MS122110
1-8	1-1/2	MS122130	MS122150
1-8	2	MS122170	MS122190
1-8	2-1/2	MS122210	MS122230
1-8	3	MS122250	MS122270

Downloaded from http://www.everyspec.com

Table 2-14. National Fine Thread Sizes

Nominal size	Nominal length	Notched	Unnotched	Military standards
10-32	.190	X		MS124655
10-32	.285	X		MS124695
10-32	.380	X		MS124735
10-32	.475	X		MS124775
10-32	.570	X		MS124815
10-32	.190		X	MS124675
10-32	.285		X	MS124715
10-32	.380		X	MS124755
10-32	.475		X	MS124795
10-32	.570		X	MS124835
1/4-28	1/4	X		MS124656
1/4-28	3/8	X		MS124696
1/4-28	1/2	X		MS124736
1/4-28	5/8	X		MS124776
1/4-28	3/4	X		MS124816
1/4-28	1/4		X	MS124676
1/4-28	3/8		X	MS124716
1/4-28	1/2		X	MS124756
1/4-28	5/8		X	MS124796
1/4-28	3/4		X	MS124836
5/16-24	5/16	X		MS124657
5/16-24	15/32	X		MS124697
5/16-24	5/8	X		MS124737
5/16-24	25/32	X		MS124777
5/16-24	15/16	X		MS124817
5/16-24	5/16		X	MS124677
5/16-24	15/32		X	MS124717
5/16-24	5/8		X	MS124757
5/16-24	25/32		X	MS124797
5/16-24	15/16		X	MS124837
3/8-24	3/8	X		MS124658
3/8-24	9/16	X		MS124698
3/8-24	3/4	X		MS124738
3/8-24	15/16	X		MS124778
3/8-24	1-1/8	X		MS124818
3/8-24	3/8		X	MS124678
3/8-24	9/16		X	MS124718

Downloaded from http://www.everyspec.com

Table 2-14. National Fine Thread Sizes - CONT

Nominal size	Nominal length	Notched	Unnotched	Military standards
3/8-24	3/4		X	MS124758
3/8-24	15/16		X	MS124798
3/8-24	1-1/8		X	MS124838
7/16-20	7/16	X		MS124659
7/16-20	21/32	X		MS124699
7/16-20	7/8	X		MS124739
7/16-20	1-3/32	X		MS124779
7/16-20	1-5/16	X		MS124819
7/16-20	7/16		X	MS124679
7/16-20	21/32		X	MS124719
7/16-20	7/8		X	MS124759
7/16-20	1-3/32		X	MS124799
7/16-20	1-15/16		X	MS124839
1/2-20	1/2	X		MS124660
1/2-20	3/4	X		MS124700
1/2-20	1	X		MS124740
1/2-20	1-1/4	X		MS124780
1/2-20	1-1/2	X		MS124820
1/2-20	1/2		X	MS124680
1/2-20	3/4		X	MS124720
1/2-20	1		X	MS124760
1/2-20	1-1/4		X	MS124800
1/2-20	1-1/2	X		MS124840
9/16-18	9/16	X		MS124661
9/16-18	27/32	X		MS124701
9/16-18	1-1/18	X		MS124741
9/16-18	1-13/32	X		MS124781
9/16-18	1-11/16	X		MS124821
9/16-18	9/16		X	MS124681
9/16-18	27/32		X	MS124721
9/16-18	1-1/18		X	MS124761
9/16-18	1-13/32		X	MS124801
9/16-18	1-11/16		X	MS124841
5/8-18	5/8	X		MS124662
5/8-18	15/16	X		MS124702
5/8-18	1-1/4	X		MS124742
5/8-18	1-9/16	X		MS124782

Downloaded from http://www.everyspec.com

Table 2-14. National Fine Thread Sizes - CONT

Nominal size	Nominal length	Notched	Unnotched	Military standards
5/8-18	1-7/8	X		MS124822
5/8-18	5/8		X	MS124682
5/8-18	15/16		X	MS124722
5/8-18	1-1/4		X	MS124762
5/8-18	1-9/16		X	MS124802
5/8-18	1-7/8		X	MS124842
3/4-16	3/4	X		MS124663
3/4-16	1-1/8	X		MS124703
3/4-16	1-1/2	X		MS124743
3/4-16	1-7/8	X		MS124783
3/4-16	2-1/4	X		MS124823
3/4-16	3/4		X	MS124683
3/4-16	1-1/8		X	MS124723
3/4-16	1-1/2		X	MS124763
3/4-16	1-7/8		X	MS124803
3/4-16	2-1/4		X	MS124843
7/8-14	7/8	X		MS124664
7/8-14	1-5/16	X		MS124704
7/8-14	1-3/4	X		MS124744
7/8-14	2-3/16	X		MS124784
7/8-14	2-5/8	X		MS124824
7/8-14	7/8		X	MS124684
7/8-14	1-5/16		X	MS124724
7/8-14	1-3/4		X	MS124764
7/8-14	2-3/16		X	MS124804
7/8-14	2-5/8		X	MS124844
1-14	1	X		MS124665
1-14	1-1/2	X		MS124705
1-14	2	X		MS124745
1-14	2-1/2	X		MS124785
1-14	3	X		MS124825
1-14	1		X	MS124685
1-14	1-1/2		X	MS124725
1-14	2		X	MS124765
1-14	2-1/2		X	MS124805
1-14	3		X	MS124845

Downloaded from http://www.everyspec.com

e. Installation of Helical Insert. Installation procedures are as follows:

(1) Drill out stripped or damaged threads to minimum depth specified In table 2-15. The minimum depth specified must be equaled or exceeded and will not include depth of countersinks, if any. Depth of counterbores or countersinks, if any, will be in addition to minimum depth specified.

NOTE

Recommended minimum edge distance after drilling and tapping is nominal diameter of bolt, screw, stud, etc., measured from centerline of tapped hole.

(2) Select tap of required nominal thread size and class fit from table 2-15. Tap threads using standard thread tapping procedure.

(3) After tapping, clean out metal chips. Threads may be examined with a helical Insert gauge.

(4) Select correct size insert tool, either prewinder or sleeve type, from table 2-15. To use prewinder type tool, pull back handle in sleeve until cutaway chamber is cleared of mandrel. Place insert in cutaway chamber with tang toward threaded end of sleeve. Push handle forward so mandrel slot engages insert tang. Turn clockwise, permitting Insert to engage In prewinder sleeve threads, and advance to notch at opposite end of prewinder. Locate tool over tapped hole, and turn handle clockwise until insert disengages from prewinder tool. Keeping mandrel in place, slide prewinder sleeve back toward handle and turn Insert mandrel until insert is 1/4 to 1/2 turn below start of tapped thread.

(5) To break off tang for a through hole, select proper tang break-off tool from table 2-15. Place punch of tool in insert and let It contact tang at bottom of hole. Strike top of break-off tool with sharp hammer blow to snap off tang.

f. Removal of Helical Insert. Removal procedures are as follows:

(1) Select proper size extract tool from table 2-15. Place tool blade into hole so that one side of blade is 1/4 turn from end of insert.
(2) Strike head of extract tool lightly with hammer.
(3) Bearing down on handle, turn slowly counterclockwise, firmly maintaining pressure as insert backs out.

NOTE

Proper removal of insert does not damage tapped threads.

g. Installation of Twinsert. Installation procedures for Twinsert are as follows:

NOTE

Because the Twinsert tapped hole and the free diameter of the Twinsert are larger than for the corresponding size insert, the recommended insert tool for the Twinsert is different from the insert tool for the screw thread or screw lock insert. Part numbers of recommended tools for each size Twinsert are in table 2-16.

(1) Drill minor diameter within minimum and maximum specifications. Drill depth to the same as for original insert (see figure 2-66).

(2) Tap thread for Twinsert. Full tapped thread length is to be same as for original insert.
(3) Remove chips.
(4) Install Twinsert 1/4 to 1/2 pitch below top surface with insert tool.
(5) Break off Twinsert driving tang with break-off tool
(6) Install screw thread or screw lock insert to position where end of insert is flush with end of Twinsert, using screw thread or screw lock insert tool.
(7) Break off insert driving tang with break-off tool.

h. Removal of Twinsert. This procedure is the same as that for removal or regular screw thread lock inserts. That is, by use of an extract tool, or if space permits and the tang Is intact, by rotating the insert forward through the hole, using insert tool mandrel. Refer to table 2-16 for extract tool numbers.

Downloaded from http://www.everyspec.com

Table 2-15. Helical Insert and Tools Data

Nominal thread size	Drill hole diameter min-max	Minimum hole depth4	Tap (finish tap) tap: Rough tap part No 1	Tap (finish tap) tap: Class 3 part No	Tap (finish tap) tap: Class 2 or 3B part No	Minimum depth nominal length of insert	Gauge Thread gauge: Class 2 part No	Gauge Thread gauge: Class 3 part No.	Gauge Thread gauge: Class 3B part No.	Insert tool part No: Pre-winder type2	Insert tool part No: Sleeve type	Tang break-off tool (manual) part No 3	Extract tool part No
						Coarse Thread							
1/4-20	.261- .267	.225	186-4	187-4	4CPS	.175	788-4	188-4	1688-4	528-4	724-4	--	1227-6
5/26-18	.328- .334	.250	186-5	187-5	5CPS	.195	788-5	188-5	1688-5	528-5	724-5	--	1227-6
3/8-16	.390- .398	.281	186-6	187-6	6CPS	.219	788-6	188-6	1688-6	528-6	724-6	--	1227-6
7/16-14	.453- .463	.322	186-7	187-7	7CPS	.250	788-7	188-7	1688-7	528-7	724-7	--	1227-16
1/2-13	.515- .525	.346	186-8	187-8	8CPS	.269	788-8	188-8	1688-8	528-8	724-8	--	1227-16
9/16-12	.578- .588	.375	186-9	187-9	9CPS	.292	788-9	188-9	1688-9	528-9	724-9-	--	1227-16
5/8-11	.653- .663	.409	186-10	187-10	10CPS	.318	788-10	188-10	1688-10	528-10	724-10	--	1227-16
3/4-10	.781- .791	.450	186-12	187-12	12CPS	.350	788-12	188-12	1688-12	528-12	724-12	1183-12	1227-16
7/8-9	.906- .916	.500	186-14	187-14	14CPS	.389	788-14	188-14	1688-14	-	724-14	1183-14	1227-16
1-8	1.031-1 .044	.563	186-16	187-16	16CPS	.437	788-16	188-16	1688-16	-	724-16	1183-16	1227-16
						Fine Thread							
1/4-28	.257- .264	.161	192-4	2193-4	4FPS	125	805-4	194-4	1694-4	535-4	733-4	--	1227-6
5/16-24	.323- .330	.187	192-5	2193-5	5FPS	146	805-5	194-5	1694-5	535-5	733-5	--	1227-6
3/8-24	.385- .392	.188	192-6	2193-6	6FPS	146	805-6	194-6	1694-6	535-6	733-6	--	1227-6
7/16-20	.450- .458	.225	192-7	193-7	7FPS	175	805-7	194-7	1694-7	535-7	733-7	--	1227-16
1/2-20	.513- .522	.225	192-8	193-8	8FPS	175	805-8	194-8	1694-8	535-8	733-8	--	1227-16
9/16-18	.577- .586	.250	192-9	193-9	9FPS	195	805-9	194-9	1694-9	535-9	733-9	--	1227-16
5/8-18	.640- .649	.250	192-10	193-10	1 OFPS	195	805-10	194-10	1694-10	535-10	733-10	--	1227-16
3/4-16	.765- .775	.281	192-12	193-12	12FPS	.219	805-12	194-12	1694-12	535-12	733-12	1184-12	1227-16
7/8-14	.890- .900	.321	192-14	193-14	14FPS	.250	805-14	194-14	1694-14	535-14	733-14	1184-14	1227-16
1-14	1 015- 1.025	.321	192-16	193-16	16FPS	.250	805-16	194-16	1694-16	535-16	733-16	1184-16	1227-16

1 Use of rough tap Is optional.
2 Use sleeve type insert tool for installation of coarse thread insert larger than 3/4-10 thread size.
3 For through hole only.
4 Minimum drill hole depth equals nominal length of insert plus the given dimension.

Downloaded from http://www.everyspec.com

Table 2-16. Twinsert and Tools Data

Nominal thread size	Screw thread assy No.[1]	Screw lock twinsert assy No.[1]	Length twinsert 1 1/2 Dia.	2 Dia.	Finish tap part No.	Insert tool part No.	Tang break-off tool No.	Extract tool No.
			National Coarse Series					
4-40	3180-04CN	3182-04CN	.168	.224	3887-04	2698-04	3580-2	1227-06
5-40	3180-05CN	3182-05CN	.188	.250	3887-05	2698-05	1194-2	1227-06
6-32	3180-06CN	3182-06CN	.207	.276	3887-06	2698-06	1195-3	1227-06
8-32	3180-2CN	3182-2CN	.246	.328	3887-2	2698-2	1195-1	1227-06
10-24	3180-3CN	3182-3CN	.285	.380	3887-3	2698-3	1195-4	1227-6
12-24	3180-1CN	3182-1CN	.324	.432	3887-1	2698-1	1196-4	1227-6
1/4-20	3180-4CN	3182-4CN	.375	.500	3987-4	2698-4	1195-5	1227-6
5/16-18	3180-5CN	3182-5CN	.469	.625	3987-5	2698-5	1195-6	1227-6
3/8-16	3180-6CN	3182-6CN	.562	.750	3987-6	2698-6	1195-7	1227-16
7/16-14	3180-7CN	3182-7CN	.656	.875	4087-7	2698-7	1196-8	1227-16
1/2-13	3180-8CN	3182-8CN	.750	1 000	4087-8	3724-10	1196-9	1227-16
			National Fine Series					
6-40	3181-06CN	3183-06CN	.207	.276	3893-06	2705-06	3581-3	1227-06
10-32	3181-3CN	3183-3CN	.285	.380	3893-3	2705-3	1195-4	1227-6
1/4-28	3181-4CN	3183-4CN	.375	.500	3893-4	2705-4	1195-5	1227-6
5/16-24	3181-5CN	3183-5CN	.469	.625	3893-5	2705-5	1195-6	1227-6
3/8-24	3181-6CN	3183-6CN	.562	.750	3993-6	2705-6	1196-7	1227-16
7/16-20	3181-7CN	3183-7CN	.656	.875	3993-7	2705-7	1196-8	1227-16
1/2-20	3181-8CN	3183-8CN	.750	1.000	3993-8	2705-8	1196-9	1227-16

Nominal thread size	Drill minor Dia. after tap min-max		Tap Major Dia. min	Tap Pitch Dia. min-max		Assembled pitch Dia. min - max	
			National Coarse Series				
4-40	.150-	.156	.1737	.1608-	.1625	.1283-	.1308
5-40	.163-	.169	.1867	.1738-	.1755	.1413-	.1438
6-32	.186 -	.193	.2148	.1989 -	.2008	.1583 -	.1611
8-32	.212-	.219	.2408	.2249-	.2269	.1843-	.1872
10-24	.254-	.261	.2920	.2711-	.2734	.2170-	.2203
12-24	.280-	.287	.3181	.2971-	.2995	.2430-	.2464
1/4-20	.326-	.334	.2723	.3474-	.3502	.2825-	.2863
5/16-18	.395-	.403	.4485	.4207-	.4240	.3486-	.3529
3/8-16	.467-	.475	.5281	.4968-	.5005	.4156-	.4203
7/16-14	.547-	.559	.6122	.5767-	.5808	.4839-	.4890
1/2-13	.617-	.629	.6882	.6498-	.6543	.5499-	.5554

See footnote at end of table.

Downloaded from http://www.everyspec.com

Table 2-16. Twinsert and Tools Data - CONT

Nominal thread size	Drill minor Dia. after tap min-max	Tap Major Dia. min	Tap Pitch Dia. min-max	Assembled pitch Dia. min - max
		National Fine Series		
6-40	.176- .182	1.998	.1868- .1886	.1543- .1569
10-32	.238- .245	.2670	.2509- .2530	.2103 - .2133
1/4-28	.310- .318	.3379	.3196- .3219	.2732- .2765
5/16-24	.375 - .383	.4150	.3936- .3964	.3395- .3433
3/8-24	.435- .443	.4776	.4561- .4590	.4020- .4059
7/16-20	.514- .526	.5604	.5349- .5383	.4700- .4744
1/2-20	.576- .588	.6231	.5974- .6010	.5325- .5371

Nominal size	Oversize kit part number: Screw thread insert	Oversize kit part number: Screw lock insert	Twinsert kit part number: Screw thread	Twinsert kit part number: Screw lock
		National Coarse Series		
4-40	3166-04	3170-04	3174-04	3176-04
5-40	3166-05	3170-05	3174-05	3176-05
6-32	3166-06	3170-06	3174-06	3176-06
8-32	3166-2	3170-2	3174-2	3176-2
10-24	3166-3	3170-3	3174-3	3177-3
12-24	3166-1	---	3174-1	3177-1
1/4-20	3166-4	3170-4	3174-4	3177-4
5/16-18	3166-5	3170-5	3174-5	3177-5
3/8-16	3166-6	3170-6	3174-6	3177-6
7/16-14	3166-7	3170-7	3174-7	3177-7
1/2-13	3166-8	3170-8	3174-8	3177-8
		National Fine Series		
6-40	3188-06	3172-06	3175-06	3178-06
10-32	3188-3	3172-3	3175-3	3179-3
1/4-28	3188-4	3172-4	3175-4	3179-4
5/16-24	3188-5	3172-5	3175-5	3179-5
3/8-24	3188-6	3172-6	3175-6	3179-6
7/16-20	3188-7	3172-7	3175-7	3179-7
1/2-20	3188-8	3172-8	3175-8	3179-8

[1] Add assembly number to length (e g 3180-04CN + .168).

Downloaded from http://www.everyspec.com

i. Oversize Insert and Twinsert Kits. Oversize insert kits and Twinsert kits are described In the following paragraphs.

(1) Twinsert kits Packed in sturdy boxes, these kits contain everything needed to salvage abused or damaged standard thread insert tapped threads in any size shown In table 2-16. Each kit contains a quantity of 1-1/2 diameter Twinserts and specially shortened mating screw thread or screw lock Inserts to complete the Twinsert assembly Exception screw lock Twinsert assemblies in sizes 4, 5, 6, and 8 are provided In two diameter lengths only. Each kit also contains a Twinsert bottom style tap and a Twinsert insert tool.

(2) Oversize kits. Each oversize kit contains a second increment oversize bottom tap and a quantity of first and second increment oversize screw thread or screw lock inserts, as specified Inserts furnished In kits are 1-1/2 diameters long.

2-12. Spacers. Spacers contained In this section are inserted Into lightweight sandwich-type panels and are used as fastening points Their use provides a strong lightweight spacer for bolt or rivet fasteners for the Installation of accessories and equipment where conventional attachments would crush or deform the panel.

a. Spacer Identification. The spacer shown In figure 2-67 Is a two-piece spacer consisting of a plug and a sleeve fabricated from aluminum. The commercial method of numbering the types and sizes of sleeves and plugs is shown In figure 2-68.

b. Spacer Installation. The selection of the proper type of spacer can be made from figure 2-69, which also shows the proper drill size required Drill the hole through the entire panel thickness The sleeve Is Installed through the bottom of the panel, and the plug through the top surface. Final setting of the assembly can be accomplished by the use of a pneumatic or hydraulic squeezer, or by a hand arbor press For small panels, final setting can be done with a rawhide mallet with the panel backed up with a heavy block For panels already installed, a bolt and nut can be used to squeeze the spacer into final setting.

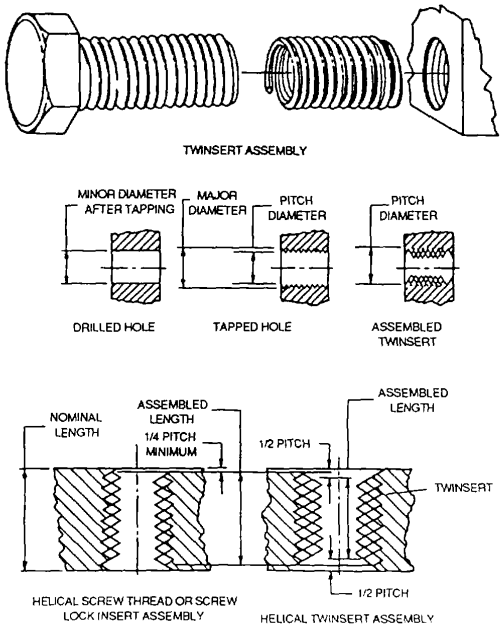

Figure 2-66. Twinsert Installation

Downloaded from http://www.everyspec.com

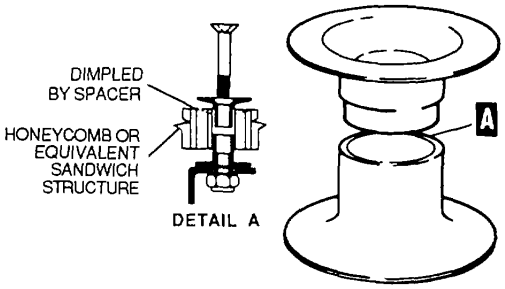

Figure 2-67. Spacer

2-13. Tie Rods. Tie rod assemblies are used as tension carrying structure members which have a high strength and will affect the alignment of adjacent structural elements. Tie rod assemblies consist of a high- strength steel tie rod, fittings or terminals, and checknuts. The tie rod is threaded with right and left threads at opposite ends to allow for adjustment. A portion of the shank is flat, for a wrench to be used to turn the tie rod during installation and adjustment. A checknut and fitting are installed on each end of the tie rod. Checknuts are tightened against the fittings to prevent loosening by vibration.

a. Identification. Round and square tie rods, AN701 through AN708, are shown in figure 2-70. The round and square tie rods are used internally for various bracking purposes where a light, strong, adjustable member is required.

b. Tie Rod Terminal Fittings. There are several different types of tie rod terminal fittings. The most common Is AN665. This fitting has a clevis end, and is threaded for attachment to the threaded ends of the tie rod shank. After adjusting tie rod to desired tension, tighten checknut and insert a wire through drilled hole In the terminal. If the wire passes through the terminal, the tie rod shank is not screwed into fitting far enough. This terminal Is Identified in figure 2-71.

2-14. Turnbuckles. Turnbuckle bodies are barrel- shaped, with each end threaded internally, one end with right-hand threads, the other having left-hand threads. Various turnbuckles are identified in figure 2-72. Turnbuckle assemblies are used to maintain control system cable tension. Earlier assemblies used AN 155 turnbuckle body, AN 170 cable eyes, AN 162 forks, and other AN parts. However, the AN series has been superseded by the MS series, but the AN parts should be used until existing stocks are depleted. Current turnbuckle assemblies are made up of MS21251 body, MS21255 cable eyes, MS21252 clevis rod ends, and other MS parts as needed.

a. Turnbuckle Installation. When installing cable system turnbuckles, screw both threaded terminals an equal distance Into barrel. All terminals must be screwed into the barrel far enough that no more than three terminal threads or four barrel threads are exposed on initial installation of a cable assembly. These limits are shown in figure 2-73. The maximum of four exposed barrel threads applies only to the initial installation of the cable so that If the cable stretches, the turnbuckle can be adjusted to the desired cable tension, at which time more or less than four barrel threads may be exposed. AN series turnbuckles are lockwired as follows:
   (1) Adjust turnbuckle to Its locking position.
   (2) Pass two locking wires through the center of the turnbuckle barrel.
   (3) Bend the ends of the wires 90 degrees toward the ends of the turnbuckle barrel.
   (4) Pass the wire ends through the hole in the turnbuckle eyes between the jaws of the turnbuckle fork.
   (5) Bend the wires back toward the center of the turnbuckle and wrap four times around the shank.
   (6) When a swaged terminal Is being lockwired, one wire is passed through the hole provided for In the terminal, looped over the free end of the other wire and both ends wrapped four times around the shank.
   (7) MS series turnbuckles are locked with MS21256 locking clip MS21251 turnbuckle bodies are slotted internally to accept the MS21256 locking clip.

b. Turnbuckle Inspection. Replace turnbuckles, cable terminals, and clevis found through visual inspection to be cracked, scratched, nicked, dented, bent, distorted, corroded, or have stripped threads. Minor nicks, scratches, or corrosion pits less than 0.005 inch deep may be removed by cleaning and burnishing smooth to restore the part to serviceable status.

Downloaded from http://www.everyspec.com

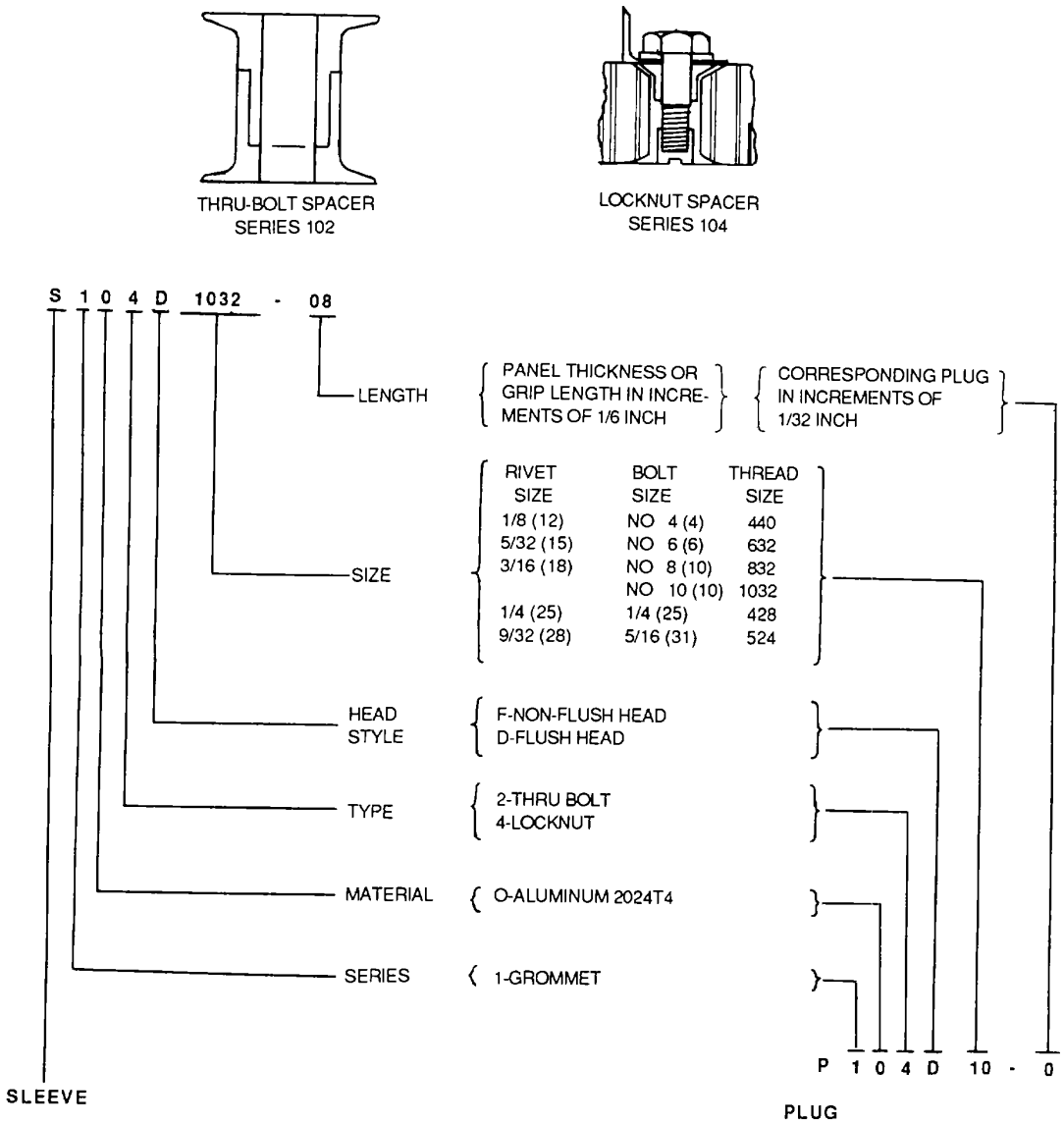

EXAMPLE GROMMET SERIES, ALUMINUM MATERIAL, SELF-LOCKING TYPE, FLUSH HEAD STYLE, 10-32 THREAD SIZE, FOR 1/2 INCH PANEL THICKNESS

Figure 2-68. Spacer Part Number Breakdown

Downloaded from http://www.everyspec.com

	NOTES	DIMENSIONS	SIZE	A	B	C	E DEGREES	F	INSTALL DRILL
SERIES 102 THRU-BOLT SPACER	F = NON-FLUSH HEAD D = FLUSH HEAD •ALL PLUGS AND SLEEVES AVAILABLE IN HEAD STYLES D AND F	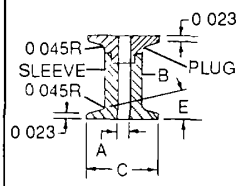	4	0 116	0 216	0 375	13		0 228
			6	0 141	0 278	0 500	13		0 290
			8	0 168	0 278	0 500	13		0 290
			10	0 194	0 309	0 625	13		0 323
			1/4	0 256	0 372	0 750	14		0 390
			5/16	0 318	0 466	0 875	14		0 484
SERIES 104 LOCKNUT SPACER	F = NON-FLUSH HEAD D = FLUSH HEAD •ALL PLUGS AND SLEEVES AVAILABLE IN HEAD STYLES D AND F	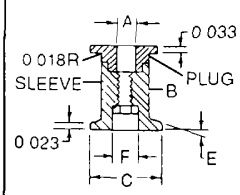	440	0 116	0 216	0 375	13	0 174	0 228
			632	0 141	0 309	0 500	13	0 231	0 323
			832	0 168	0 309	0 500	13	0 231	0 323
			1032	0 194	0 341	0 625	13	0 263	0 358
			428	0 253	0 403	0 750	14	0 327	0 421
			524	0 316	0 497	0 875	14	0 395	0 515

Figure 2-69. Spacer Installation Data

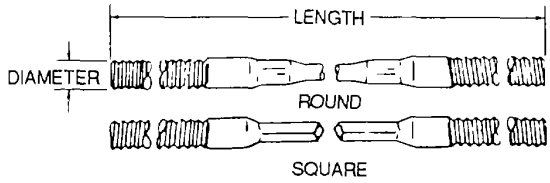

Figure 2-70. Tie Rods, Round and Square

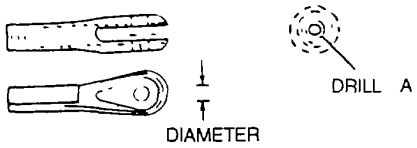

Figure 2-71. Tie Rod Terminal Fittings

Downloaded from http://www.everyspec.com

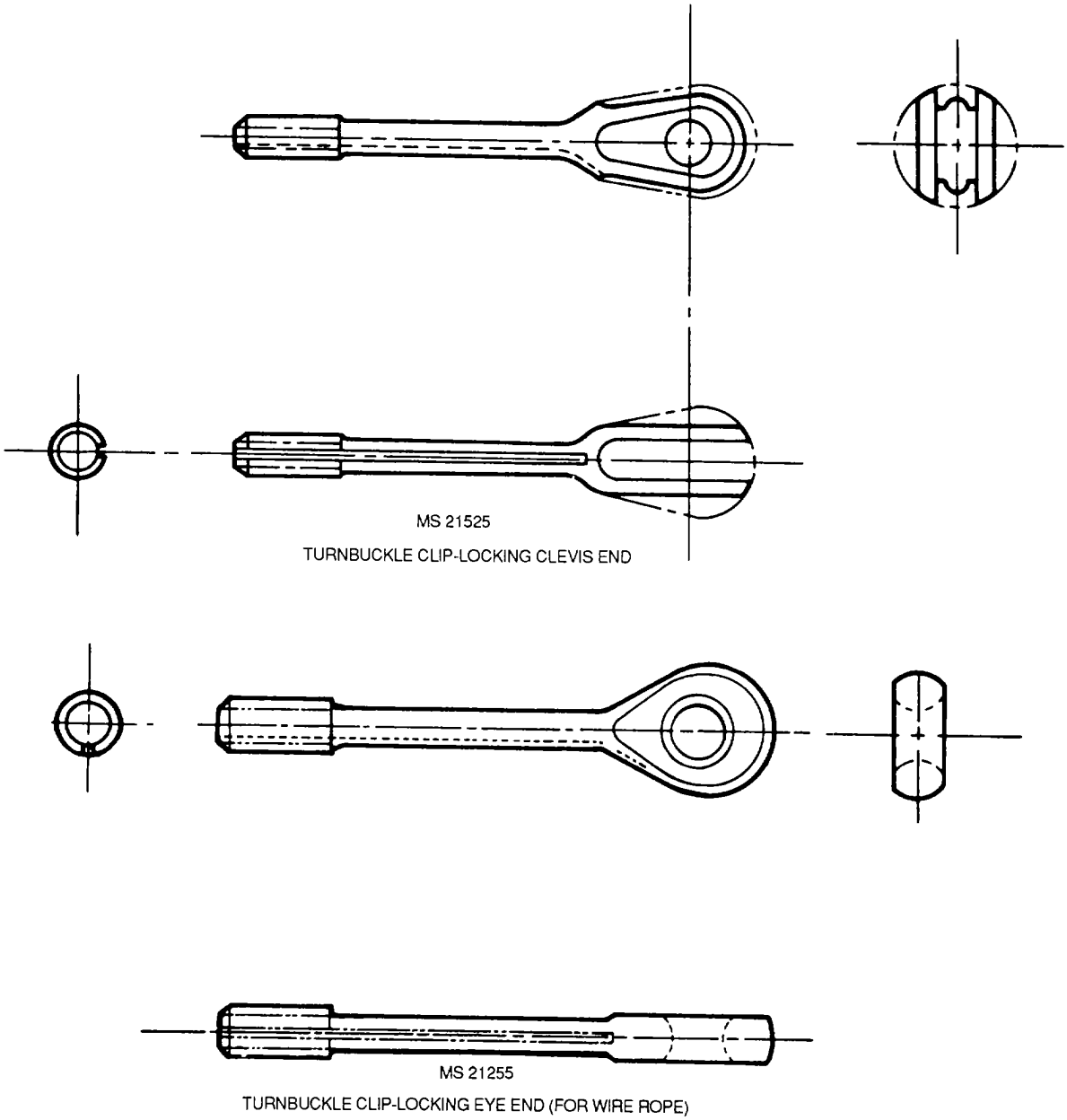

Figure 2-72. Turnbuckle Terminals (Sheet 1 of 2)

Downloaded from http://www.everyspec.com

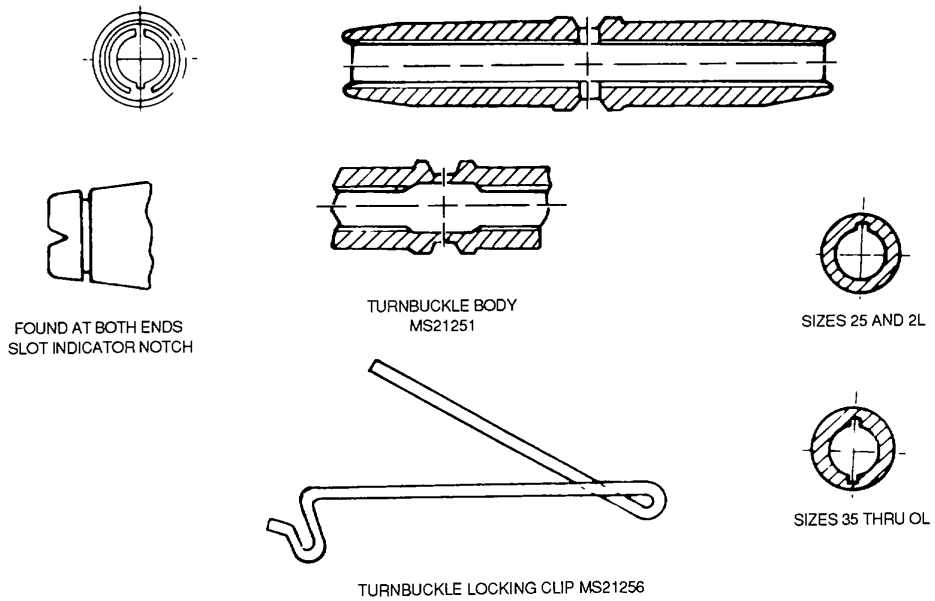

Figure 2-72. Turnbuckle Terminals (Sheet 2 of 2)

2-15. Lockring Fastener. The lockring, as shown in figure 2-74, is an accessory part used as an anti-rotation device for screw thread inserts, studs, and many other externally threaded fastening devices. It is serrated both internally and externally. The internal serrations are configured to mesh with those on the insert flange. The external serrations are relieved on the entering side so as to form a pilot to permit initial engagement internally. In addition, there is a 10-degree rake angle on the external serration so that the effect of a broach is duplicated when the ring is pressed or driven into the counterbored region in the receiving material. The crest of the serrations cuts a series of longitudinal grooves, thus creating a composite shear area for resistance to rotation, as shown in figure 2-75.

2-16. Fittings. The following paragraphs identify tubing and hose fittings used in Army aircraft hydraulic, pneumatic, and oxygen systems. Figure 2-76 shows typical aircraft fittings.

Fitting Identification. The dash number after the basic number indicates the size, In sixteenths of an inch, of the tubing or hose for which the fitting is made. The measurement is for the outer diameter of tubing and the inner diameter of hose. Pipe threads are identified by a dash number which indicates the pipe size in eights of an inch. The material code is given in table 2-17. For example, AN776-6D indicates an aluminum alloy elbow for tubing 6/16 (3/8) inch in diameter. Table 2-18 lists aircraft fittings.

Table 2-17. Fittings Material Code

Metal	Letter
Aluminum alloy	D
Brass	B
Steel	No letter
Aluminum bronze	Z

2-17. Practices for Installation of Cotter Pins and Lockwire. Installation of cotter pins and safetying methods are covered by the following paragraphs.

a. Cotter Pin Installation. Cotter pins shall be installed as follows

Downloaded from http://www.everyspec.com

Table 2-18. Fittings

Item	Description
Adapter	Hose to universal
Bolt	Flared tube end fitting (universal)
	Universal fittings
Bushing	Screw thread reducer
	Screw thread expander
	Reducer
Cap Assembly	Pressure seal flared tube fitting
Collar	Tubing end hose connection
Cone	Union
Connection	Straight flanged hose
	45-degree flanged hose
	90-degree flanged hose
	Bulkhead hose
Coupling	Union (brazing)
	Airspeed tube union (brazing)
	Pipe thread
Cross	Flared tube
Internal pipe thread	
	Internal screw thread
Elbow	90-degree universal
	75-degree universal
	45-degree universal
	Union
	45-degree union
	90-degree flared tube
	90-degree flared tube and pipe thread
	90-degree hose to universal
	45-degree flared tube and pipe thread
	90-degree flared tube and bulkhead universal
	45-degree hose and universal
	45-degree hose to universal
	45-degree hose bulkhead
	90-degree hose bulkhead
	90-degree internal and external pipe thread
	45-degree internal and external pipe thread
	90-degree pipe thread

Downloaded from http://www.everyspec.com

Table 2-18. Fittings-- CONT

Item	Description
Fitting assembly	Detachable hose swivel
Fitting end	Detachable hydraulic and pneumatic hose swivel
Flange	Straight thread boss welding
Nipple	Flared tube and pipe threads
	Pipe thread
	Union
Nut	Union
	Coupling sleeve
	Coupling
	Flared tube, bulkhead and universal fitting
Plug	Flared tube
	Square head, drilled for locking
Plug and bleeder	Screw thread
	Square head pipe thread
	Countersunk hex head pipe
	Pipe, hex head
Reducer	External thread flared tube
Sleeve	Coupling
Tee	Universal fitting
	Flared tube, internal thread of side
	Flared tube, internal thread on run
	Union
	Flared tube with bulkhead on run
	Flared tube
	Flared tube with pipe thread on side
	Flared tube with pipe thread on run
	Bulkhead and universal flared tube
	Internal pipe thread
	Internal screw thread
Union	Flared tube
	Flared tube, 3/8-inch bulkhead and universal

Downloaded from http://www.everyspec.com

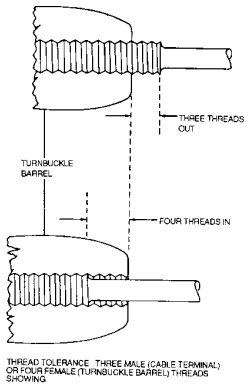

Figure 2-73. Turnbuckle Thread Limits

CAUTION

Cotter pin shall be new upon each application. Old cotter pins may fail causing damage to component

NOTE

- Use brass cotter pins In areas where nonmagnetic material Is required Use corrosion-resistant cotter pins In areas where corrosion-resistant material is required
- Avoid kinks or sharp bends In cotter pins.

(1) Install cotter pin in castellated nuts and bolts with head parallel to slot in nut, as shown In figure 2-77. This Is the preferred method

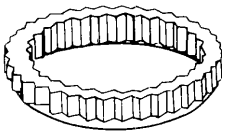

Figure 2-74. Lockring

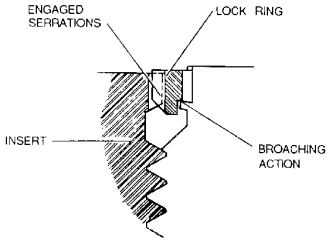

Figure 2-75. Lockring Principle

(2) Install cotter pin with head horizontal to slot In nut as an alternate installation, as shown In figure 2-77. This method will be followed where there is danger of snagging hands, clothing, or equipment of flight personnel on sharp ends of cotter pin or because of installation difficulties.

NOTE

In event more than 50 percent of cotter pin diameter Is above castellation, a washer shall be used under nut, or a shorter fastener shall be used.

Downloaded from http://www.everyspec.com

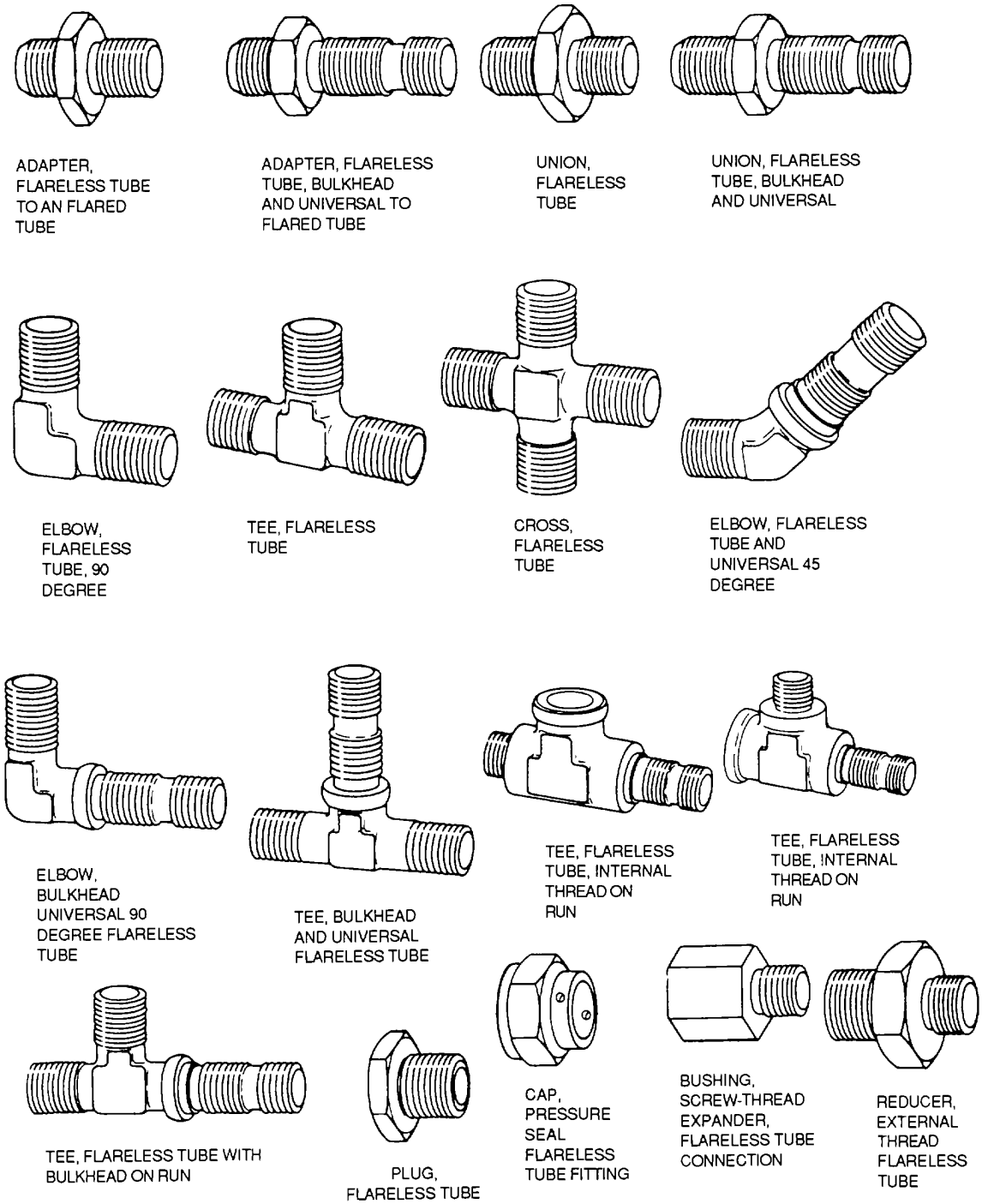

Figure 2-76. Typical Fittings

Downloaded from http://www.everyspec.com

(3) When safetying a clevis pin, install the cotter pin with the axis of the eye parallel to the shank of the clevis pin or rod end. Bend the prongs around the shank of the clevis pin or rod end, as shown in figure 2-77.

NOTE

Corrosion-resistant steel cotter pins shall be used only in areas required to be nonmagnetic, or where heat resisting qualities are desired, such as forward of firewall.

(4) Install cotter pins in rotating parts such as propellers, rotor heads, and the like, with head in direction of rotation

(5) Install cotter pins In stationary bolts with heads up or facing forward whenever possible. When installing a cotter pin in a stationary bolt in a moving control such as elevator control push rod end to elevator, carburetor mixture control rod end to carburetor mixture arm and the like, the head of the cotter pin should be up or facing forward throughout the range of that control as much as possible.

b. Lockwire Installation. To prevent loosening during service, attaching parts, such a drilled-head bolts, fillster head screws, turnbuckles, thumbscrews, plugs, and similar items, are secured by use of lockwire or cotter pins. The following general rules shall apply to lockwire.

WARNING

Eye protection is required when cutting lockwire. Injury to personnel may occur.

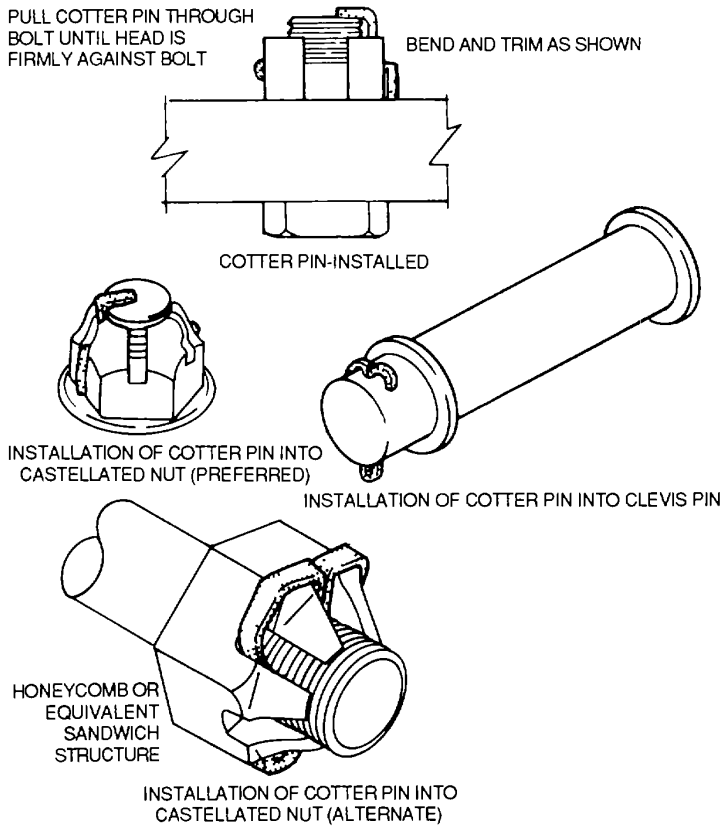

Figure 2-77. Cotter Pin Installation

Downloaded from http://www.everyspec.com

CAUTION

New lockwire shall be used for each application. Damage to equipment may otherwise result.

NOTE

- All lockwiring and cotter pin installation will be accomplished in accordance with MS33540
- Avoid kinks or sharp bends In lockwire.

(1) Use Federal Specification QQ-W-461, carbon steel wire, for normal lockwire applications, use ASTM A580 or ASTM A313, corrosion-resistant steel wire, where resistance to corrosion Is a desired property.
(2) Use steel corrosion resisting wire, Federal Specification QQ-W-390, for specific applications where nonmagnetic qualities and heat resisting properties are desired.

NOTE

When safetying vented plugs, caution should be used to ensure that the safety wire is of such a diameter that It will not completely block the vent hole.

(3) Install lockwire so that when wired bolt, screw, or threaded item begins to loosen, wire will apply a restraining force In tightening direction. Do not overstress wire. Make certain that the wire Is Installed and twisted so that the loop around the head stays down, and does not tend to come up over the bolt head and leave a slack loop.

NOTE

When using castellated nuts, If the slot Is close to the top of the nut, the wire will be more secure If It passes alongside the stud.

(4) Apply recommended torque values to parts to be secured and align holes before attempting to proceed with installation of lockwire.

NOTE

The length of pigtail at the twisted end should be 1/4 to 1/2 inch, or 3 to 6 turns This pigtail shall be bent back or under to prevent It from becoming a snag

c. **Double-Twist Method.** The double-twist method is the most common method of securing with lockwire. Examples of this method are shown in figures 2-78 and 2-79. The following general rules shall apply.

(1) Install lockwire to parts which have a hole diameter of less than 0.045-inch diameter wire
(2) Install lockwire to parts which have a hole diameter of more than 0 045-inch diameter with wire a minimum diameter of 0.032-inch.
(3) Install lockwire to drilled-head bolts, screws, or other parts which are grouped together, In series rather than individually.

NOTE

- When installing lockwire to widely spaced bolts by the double-twist method, a group of three will be the maximum number in a series.
- When Installing lockwire to closely spaced bolts, the number that can be secured by a 24-inch length of wire will be the maximum number In a series.
- Widely spaced multiple groups shall mean those in which the fastenings are from 4to 6 inches apart. Lockwiring shall not be used to secure fastenings or fittings which are spaced more than 6 inches apart unless tie points are provided on adjacent parts to shorten the span of lockwire to less than 6 inches.

CAUTION

Screws in closely spaced geometric patterns which secure hydraulic or air seals hold hydraulic pressure, or are used in critical areas of clutch mechanisms and super-chargers should use the double-twist method of lockwiring to prevent lockwire failure

Downloaded from http://www.everyspec.com

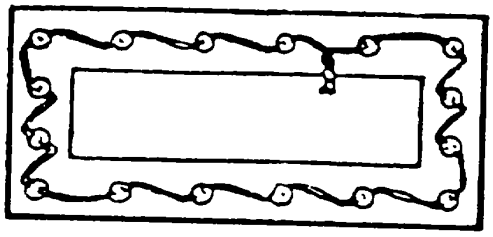

SMALL SCREWS CLOSELY SPACED, CLOSED
GEOMETRICAL PATTERN
SINGLE WIRE METHOD

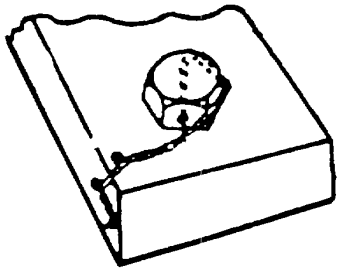

SINGLE FASTENER APPLICATION
DOUBLE TWIST METHOD

EXTERNAL SNAP RING
SINGLE WIRE METHOD

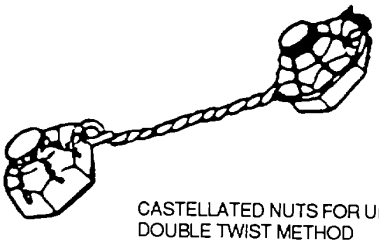

CASTELLATED NUTS FOR UNDRILLED STUDS
DOUBLE TWIST METHOD

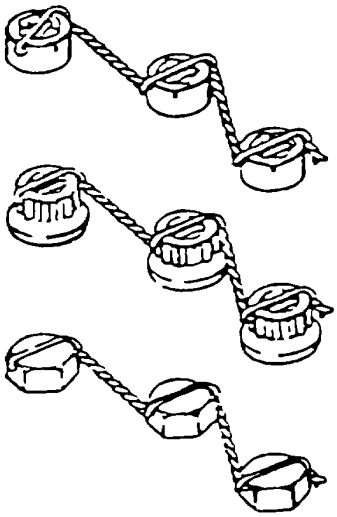

MULTIPLE FASTENER APPLICATION
DOUBLE TWIST METHOD - SINGLE HOLE

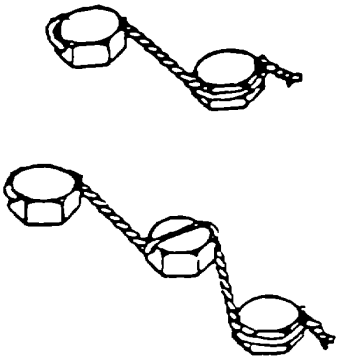

MULTIPLE FASTENER APPLICATION
DOUBLE TWIST METHOD - SINGLE HOLE

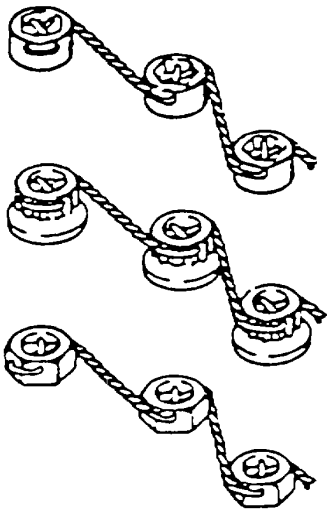

MULTIPLE FASTENER APPLICATION
DOUBLE TWIST METHOD - MULTIPLE HOLE

NOTE
THE FIGURES SHOWN ARE FOR RIGHT HANDED THREAD APPLICATION
LOCKING FOR LEFT HANDED THREADS WILL BE OPPOSITE

Figure 2-78. Lockwiring Screws, Nuts, and Bolts (Sheet 1 of 2)

Downloaded from http://www.everyspec.com

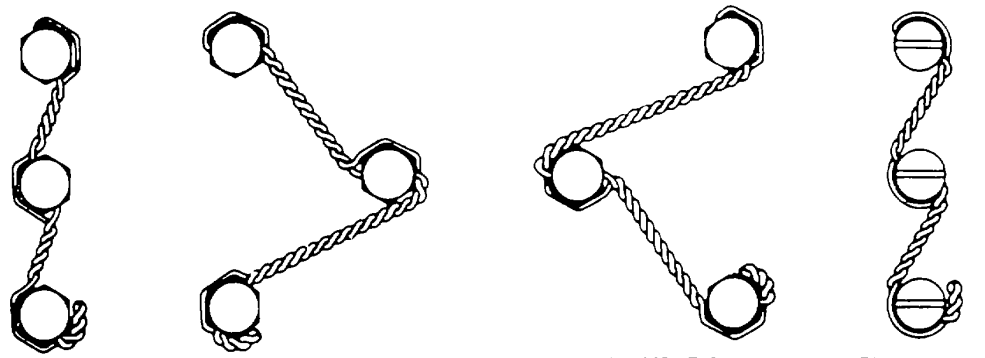

EXAMPLE 1 EXAMPLE 2 EXAMPLE 3 EXAMPLE 4

Examples 1, 2, 3, and 4 apply to all types of bolts, fillister head screws, square head plugs, and other similar parts which are wired so that the loosening tendency of either part is counteracted by tightening of the other part The direction of twist – from the second to the third unit is counterclockwise to keep the loop in position against the head of the bolt The wire entering the hole in the third unit will be the lower wire and by making a counterclockwise twist after it leaves the hole, the loop will be secured in place around the head of that bolt

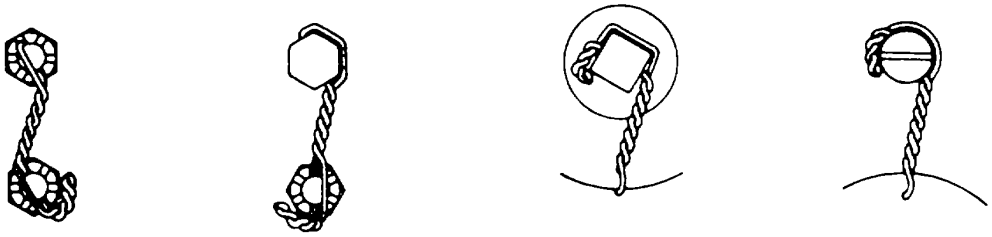

EXAMPLE 6 EXAMPLE 5 EXAMPLE 7 EXAMPLE 8

Examples 5, 6, 7, & 8 show methods for wiring various standard items Note Wire may be wrapped over the unit rather than around it when wiring castellated nuts or on other items when there is a clearance problem

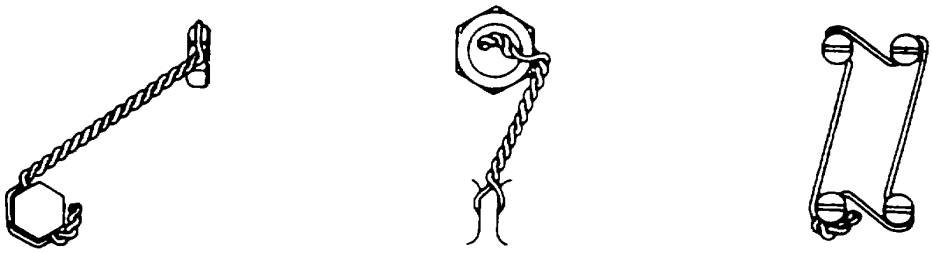

EXAMPLE 9

Example 9 shows the method for wiring bolts in different planes Note that wire should always be applied so that tension is in the tightening direction

EXAMPLE 10

Hollow head plugs shall be wired as shown with the tab bent inside the hole to avoid snags and possible injury to personnel working on the engine

EXAMPLE 11

Correct application of single wire to closely spaced multiple group

Figure 2-78. Lockwiring Screws, Nuts, and Bolts (Sheet 2 of 2)

Downloaded from http://www.everyspec.com

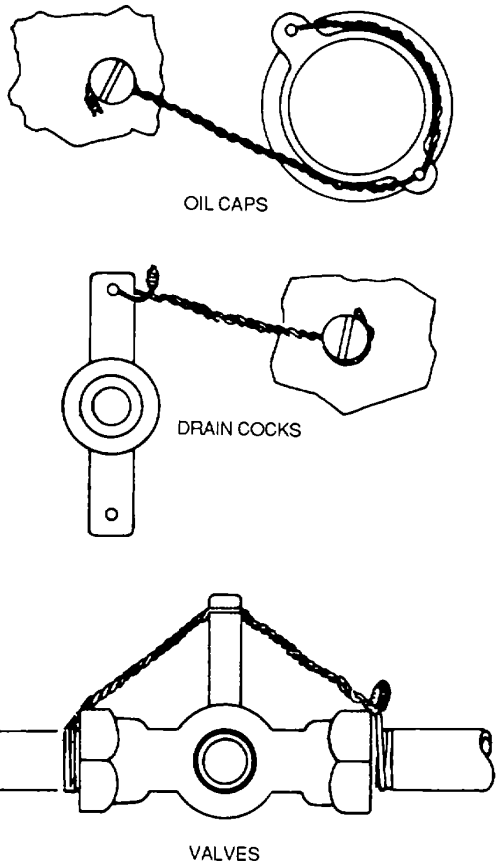

NOTE
SAFETY METHODS SHOWN
ARE FOR RIGHT HAND
THREADS LEFT HAND
OPPOSITE

Figure 2-79. Lockwiring Oil Caps, Drain Cocks, and Valves

Downloaded from http://www.everyspec.com

d. Single-Wire Method. Examples of the single-wire method of securing with lockwire are shown in figure 2-79. This method shall be used on small screws in a closely spaced, closely geometrical pattern (triangle, square, rectangle, circle), parts Installed In electrical systems, and In places that are difficult to reach. The largest nominal size wire which the hole will accommodate may be used.

NOTE

Closely spaced shall be considered a maximum of 2 inches between centers

e. Safetying Emergency Devices. Use 0.020-inch diameter copper wire, Federal Specification QQ-W-343, for, securing emergency devices where easy accessibility must be maintained. Accessibility is accomplished by breaking wire. The following general rules shall apply.

(1) Use a 0 020-inch diameter copper wire when emergency devices such as canopies, exits, and the like require servicing.

(2) Use a 0 020-inch diameter copper wire to secure nonstructural parts such as emergency valves, oxygen regulators, and the like.

(3) Secure first aid kits In accordance with TM 1-1500-204-23-1.

(4) Secure items requiring seal wire to ensure completeness of contents or to determine when con- have been used with 0.020-inch diameter copper wire. Seal with a lead seal.

f. Lockwiring Turnbuckles. The standard procedure for securing turnbuckles is shown in figure 2-80. Employ this procedure when lockwire replacement is wire required on turnbuckles secured by other methods. Use wire sizes specified as follows: 0 032-inch diameter on assemblies where cable diameter is 1/16-inch, 0.041-inch diameter wire on assemblies where cable diameter is 3/32-, 1/8- or 3/16-inch, and 0 047-inch diameter wire on assemblies where cable diameter is greater than 3/16-inch.

g. Speed Rig Safetying. Insert lockwire through eyelet in speed rig, wrap lockwire around pin, then back through eyelet as shown in figure 2-81. Twist wire to proper length and secure around locking collar at base of speed rig, cut wire to proper length, twist and fold into speed rig cavity.

h. Rod End Safetying. Lockwire rod end (key type NAS559), as shown in figure 2-82.

i. Securing Electrical and Electronic Connectors. Secure electrical and electronic connectors in accordance with TM 55-1500-323-24.

j. Lockwiring Couplings. Lock wire will be installed through the band loops, which retain the T-Bolt and the Trunnion or Quick Coupler.

2-18. Torque. Tighten nuts to torque specified in table 2-9. Apply torque to a bolt head only when a torque wrench cannot be used on the nut. After application of torque to a nut, further tightening to align the slot for cotter pin or lockwire is permitted.

a. Torque Definitions. Torque definitions are explained In the following paragraphs.

(1) Breakaway torque Breakaway torque (table 2-8) is defined as minimum torque required to start the movement of a nut on or off bolt with no axial load on the nut and with the bolt completely through the nut.

(2) Friction torque (tare, drag, run on). Friction torque Is the torque required to overcome the internal friction between a self-locking nut and bolt as the nut is being turned on the bolt, but before the nut contacts the washer (no axial load).

(3) Final torque. Final torque is the sum of the friction torque plus the applicable torque values from table 2-9 or friction torque plus torque from the applicable maintenance manual.

(4) Break-loose torque Break-loose torque is defined as the effort to break loose an axially loaded nut.

b. Considerations to be Taken Before Torquing. Use the torque value given In the applicable maintenance manual with the detailed Instructions for the assembly or the installation of the components. In those instances where the torque value is not specified, use table 2-9, which Is a standard table of recommended torque values for tightening different types of standard nuts. The following points should be considered prior to installation of any fastener requiring torque.

(1) Thread lubrication. Threads must be clean and free from nicks, burrs, paint, grease, or oil to obtain the correct tension or preload in the bolt when it is tightened to the specified torque value. However, there are some applications where lubrication or antiseize compound is used on the threads. The maintenance manual should be consulted with regard to the torque value for lubricated threads when specified.

Downloaded from http://www.everyspec.com

(2) Tightening new nuts. It is good practice in torquing, especially for new bolts and nuts, to first tighten the fastener to the desired torque value and then loosen the nut or bolt by backing off approximately one-half turn. Then retighten to the specified torque value. This aids in cleaning and smoothing the threads, and results in more accurate torque.

(3) Aligning for cotter pins. Never loosen a castellated nut to obtain alignment. When a nut is to be secured to a fastener with a cotter pin or safety wire, the nut should be tightened to the low limit of the specified torque range and the hole aligned, If necessary, by tightening operation. Where only a single torque value is specified and the hole does not align, further tightening to align the next slot is permissible in either case, the maximum torque allowed by table 2-9 must not be exceeded.

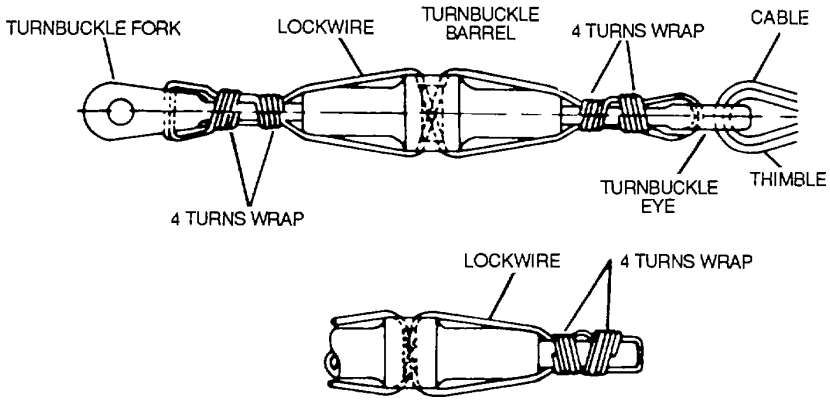

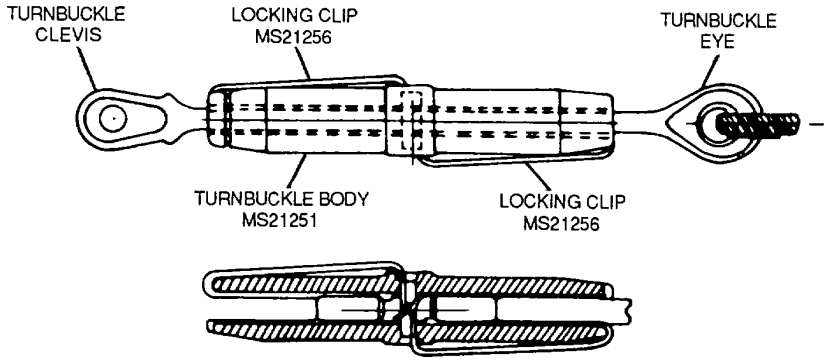

Figure 2-80. Typical Turnbuckle Assemblies

Downloaded from http://www.everyspec.com

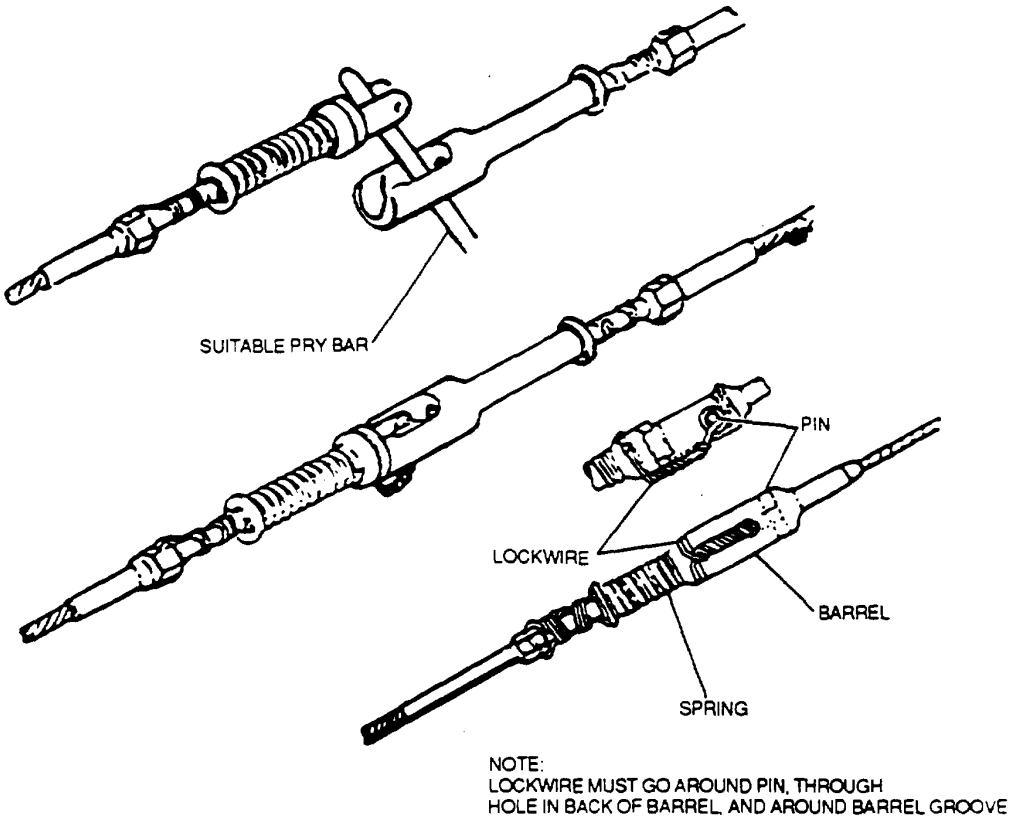

Figure 2-81. Speed Rig Lockwirlng

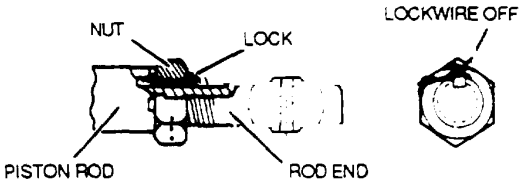

Figure 2-82. Rod End Safetying (Key Type NAS 559)

(4) Torquing self-locking nuts. Self-locking nuts contain an internal friction elements. The torque of this friction, called tare torque, must be measured on the torque wrench as the nut is being turned but before the nut touches the washer. The proper torque is the sum of the standard torque in table 2-9 plus the tare torque.

(5) Tightening on the head end. When a fastener is tightened from the head end, some of the torque applied is absorbed in turning the bolt in the hole. The amount of torque absorbed will vary, depending on the clearance in the hole and the alignment of the parts. For this reason, torque values are specified for tightening fasteners on the nut end. However, in some instances it will be necessary to tighten the fastener from the head end. On these occasions, the frictional (tare) torque required to turn the bolt in the hole should be determined with the nut engaged, on the last rotation before the nut seats, and then added to the standard torque value called out in table 2-9.

Downloaded from http://www.everyspec.com

(6) Checking torque. Checking installed fasteners to determine if they have been tightened to the specified torque value cannot be accurately accomplished using a torque wrench. Installed fasteners generally require more torque than was originally applied, in order to overcome static friction and start the fastener turning. To ensure proper torque has been applied, the fastener should be backed off from one-half to one full turn and retightened to the correct torque value. A torque wrench should not be used for the backoff operation.

(7) Retorquing. In some special applications, it is necessary to retorque a fastener after a prescribed period following initial installation in order to insure that proper clamping force and bolt tension are still in effect. If retorquing is required, the applicable aircraft maintenance manual should be consulted for proper retorquing procedure.

(8) Damaged threads. Studs with damaged threads should be replaced or the threads rechecked; however, this is not always possible in field maintenance. To overcome the problem of tightening a nut on a stud to the proper torque value where thread damage is present and therefore increases the rundown resistance of the nut, add the rundown resistance to the specified torque value. The rundown resistance should be measured on the last rotation before the nut seats. For example, if 325 inch-pounds of torque is specified for an application and the rundown resistance due to thread damage is 25 inch-pounds, the nut should be tightened to a torque of 325 inch-pounds plus 25 inch-pounds, or 350.

c. *Recommended Torque Values.* For recommended torque values, refer to tables 2-8 and 2-9.

2-19. Safety Cable.

a. *General Instructions for the Selection of Safety Cable.* The selection of materials shall be in accordance with AS4536 (SAE), available from SAE International, 400 Commonwealth Avenue, Warrendale, PA 15096-0001, and shall be in accordance with the service limitations outlined herein.

NOTE

Minimize mixing of safety wire and safety cable.

(1) AS3510 series (UNS S32100 CRES) safety cable shall be selected for general purpose use on all applications up to 649°C (1200°F).

(2) AS3509 series (UNS N6600 Nickel Alloy) safety cable shall be selected for up to 9820C (18000 F).

(3) Only safety cables and ferrules supplied by a manufacturer that meets all the requirements of AS4536 shall be allowed.

(4) Safety cable shall not be used for any shear, or break away applications.

(5) Safety cable shall be installed with a calibrated tool which is supplied by the safety cable manufacturer for the purpose of applying a predetermined cable tension, crimping the ferrule, and cutting the excess cable without allowing tension to be lost.

b. *The Size of Safety Cable Shall be in Accordance with the Following Requirements*:

(1) 0.020 inch diameter safety cable is intended for use on parts having a nominal hole diameter of 0.045 inch (1.14 mm) or smaller.

(2) 0.032 inch diameter safety cable is intended for use on parts having a nominal hole diameter of 0.075 inch (1.91 mm) or smaller.

(3) 0.040 inch diameter safety cable is intended for use on parts having a nominal hole diameter of 0.095 inch (2.41 mm) or smaller.

(4) The specified length of the cable shall be selected to accommodate the span between fasteners added to the length of cable required to correctly engage the application tool.

(5) Applications where safety cable is to be installed through a hole having a nominal diameter of greater than 0.095 inch (2.41 mm), but less than 0.200 inch (5.08 mm) shall require a flat washer (same material composition as the safety cable) which is supplied by the manufacturer for this purpose, and shall be used as shown in figure 2-83.

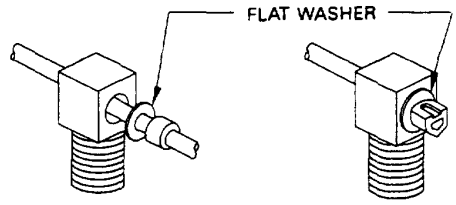

Figure 2-83. Flat Washer Safety Cable Installation (FW10-1)

(6) Safety cable shall be installed with an application tool which has been calibrated to meet the performance requirements of AS4536 (SAE) and this manual.

Downloaded from http://www.everyspec.com

c. *Safety Cable Installation.* Safety cable may be used as a substitute for lockwire to prevent loosening during service. Threaded parts, such as drilled-head bolts, fillister head screws, turnbuckles, thumbscrews, hose fittings and electrical connectors, plugs, caps, and similar items are within the scope of the safety cable application. The following rules shall apply when using safety cable.

WARNING

Safety cable shall not be substituted for safety wire when the installation of safety wire is a critical characteristic of the installation.

NOTE

Routing of safety cable may vary from that of lockwire in order to achieve a proper installation.

(1) When safety cable is being substituted for lockwire in an existing installation (maintenance, rework, etc.), equivalent diameter safety cable to that of the lockwire shall be selected for use, providing that selection criteria for safety cable as defined in the (1) General Instructions are met.

(2) Adjacent Units. Safety cable shall be installed in such a manner that any tendency for a fastener to loosen will be counteracted by an additional tension on the cable. Safety cable shall be threaded through the fasteners in such a way as to produce installed safety cable with either positive or neutral pull.

(3) Maximum Span. The maximum span of safety cable between two termination points shall be 6 inch (152.4 mm) unless otherwise specified.

CAUTION

Installing Defects: Any cable defect (nick, fray, kink, or any other mutilation of the safety cable) found prior to, during, or subsequent to installation, is not acceptable.

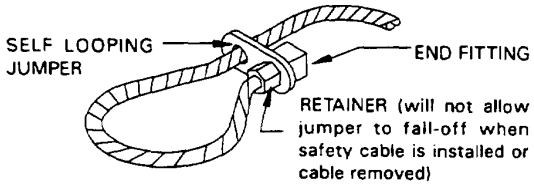

Figure 2-84. Self Looping Safety Cable TM 1-1500-204-23-6

NOTE

Avoid kinks or sharp bends while handling and threading safety cable.

(4) Installing Holes. Safety cable must be installed through the holes intended for this purpose in the part being secured, or through the holes provided in a self looping device secured to the safety cable by the safety cable manufacturer (figure 2-84). In applications where holes are not provided for safety cable in the component to which it is attached the self looping safety cable may be used in a manner like, or similar to figure 2-85.

Figure 2-85. Self Looping Safety Cable Anchored to a Pin Assembly

(5) Safety Cable/Ferrule Reuse. Safety cable and ferrule shall be new upon each application. Reuse is not allowed.

(6) Installation. Various examples of safety cable installation are shown in this section. All possible combinations and applications are not shown. Unless otherwise specified in the application engineering drawing, safety cable shall be installed in two or three bolt patterns with two bolt patterns being the preferred method where an even number of fasteners are to be secured. The installer must adhere to the basic rules outlined in this manual.

(7) Hose Fittings and Electrical Connector Requirements. Hose fittings and electrical coupling nuts shall have safety cable installed in the same manner as tube coupling nuts.

(8) Excess Cable. After Installing safety cable, excess cable from the crimped ferrule shall be cut by the installation tool. The maximum allowable length of cable extending beyond the ferrule shall be 0.031 inch (0.79 mm).

(9) Crimping Requirements (Pull-Off Load, Reference Table 2-19). Safety cable shall be installed with the safety cable manufacturers recommended tool, which has been tested and calibrated in accordance with procedures specified in this manual.

Downloaded from http://www.everyspec.com

Table 2-19. Safety Cable Minimum Crimp Requirements (Pull-Off Load)

Nominal Cable Diameter Inch (mm)	Safety Cable Construction	Minimum Pull-Off Load lbf (N)
0.020 (0.51)	1 x 7	30 (133.4)
0.032 (0.81)	3 x 7	70 (311.4)
0.040 (1.02)	7 x 7	110 (489.3)

(10) Hole Alignment. Undertorquing or overtorquing to obtain proper alignment of the holes is not permitted. Apply recommended torque values to parts to be secured, and alignment of holes shall be evaluated before attempting to proceed with safety cable.

CAUTION

The maximum bend exit limit of safety cable, when applied to a threaded fastener head, shall be 1350. This does not apply to hose fittings, electrical connector coupling mechanisms, turnbuckles, and similar applications where the safety cable is constrained by the shape of the component being secured.

(11) In applications where safety cable shall be required to exceed the 1350 maximum bend exit limit in order to achieve neutral to positive pull on a threaded fastener head, a self looping device which is secured to the safety cable by the safety cable manufacturer may be used to obtain a secured installation as shown (figure 2-86).

CAUTION

This method should only be used in applications where the safety cable can not "flip" over the corner or over the head of the fastener being secured.

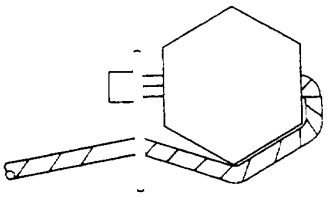

Figure 2-86. Self Looping Safety Cable in High Bend Exit Application

(12) Cable Flex Limits. After installing safety cable, the maximum flex between termination points shall be no greater than that specified in the Cable Flex Limit Table (table 2-20).

NOTE

When calculating the flex limit (B & C) of safety cable which is installed through three fasteners, the A = D + E formula shall apply (see figure 2-87). The total length of safety cable from the point where it exits the first fastener, to the point where it enters the last fastener shall be measured. The corresponding length from table 2-20, column A shall be used to determine the flex limit.

Table 2-20. Flex Limits, Inch (mm)

A	B	C
0.5 (12.7)	0.125 (3.18)	0.062 (1.59)
1.0 (25.4)	0.250 (6.35)	0.125 (3.18)
2.0 (50.8)	0.375 (9.52)	0.188 (4.76)
3.0 (76.2)	0.375 (9.52)	0.188 (4.76)
4.0 (101.6)	0.500 (12.70)	0.250 (6.35)
5.0 (127.0)	0.500 (12.70)	0.250 (6.35)
6.0 (152.4)	0.625 (15.88)	0.312 (7.94)

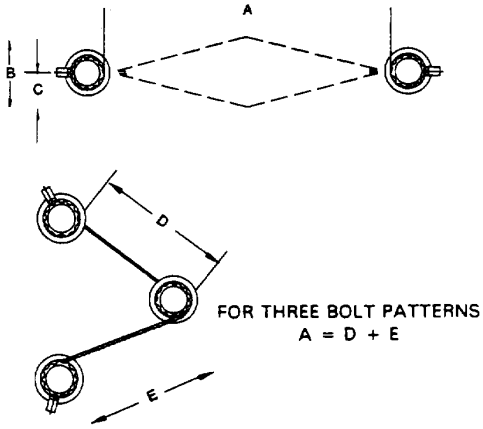

Figure 2-87. Safety Cable Flex Limits

NOTE

Light finger pressure of approximately 2 pounds shall be applied at mid-span when inspecting total flex limit of installed safety cable.

Downloaded from http://www.everyspec.com

CAUTION

It is important to hold the tool as steady and perpendicular to the fastener as possible during the crimp/cut cycle in order to maintain consistent tensioning of the cable after the tool is removed.)

d. *Elongated Ferrules.* Ferrules of extra length, having a radius at one end and a straight surface at the other end, may be used in applications which restrict the clearance for the installation tool nose to be placed in correct alignment with the fastener (such as low profile fastener heads, recess locations, or obstructions by structures or installed components). See figures 2-88 and 2-89.

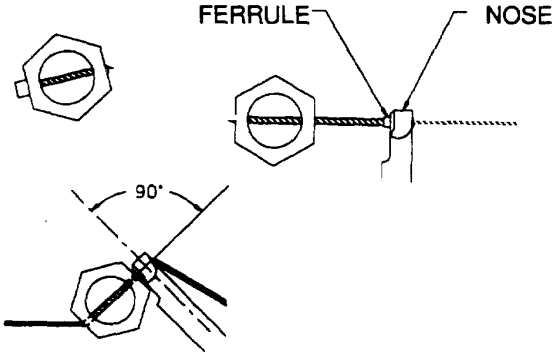

Figure 2-88. Correct Application of Safety Cable

NOTE

Always install elongated ferrules with the radius end toward the fastener, and the straight end in the tool crimp cavity. Double check cable tension between fasteners after removal of application tool.

NOTE

Radius required on 0.032 inch diameter and larger elongated ferrules. Radius optional on 0.020 inch diameter elongated ferrules.

e. *Examples of Installed Safety Cable.* See figure 2-90.

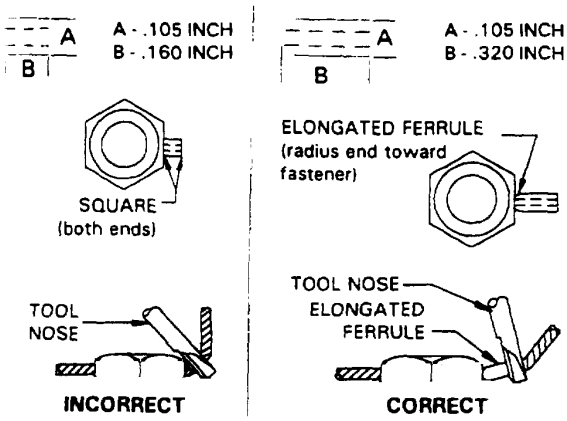

Figure 2-89. Low Profile Application for 0.032 and 0.040 Inch Safety Cable

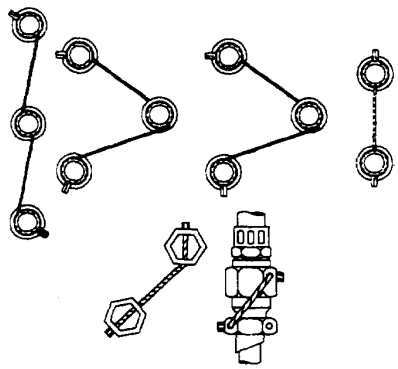

STANDARD HARDWARE

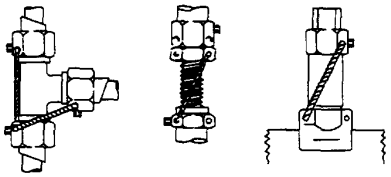

TUBE COUPLING

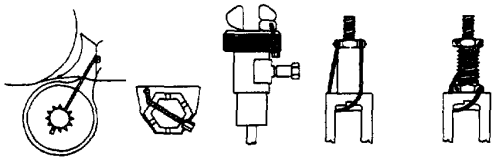

OTHER APPLICATIONS

Figure 2-90. Examples of Installed Safety Cable

Downloaded from http://www.everyspec.com

f. *Safety Cable Identification Stamp.* In applications where the user requires a logo or ID code to be a permanent part of the safety cable installation (for warranty or tractability), it shall be applied by the safety cable manufacturer to one or more surfaces of the square end fitting of the safety cable. Only impression stamping is permitted, no paint, ink or labels are acceptable. See figure 2-91.

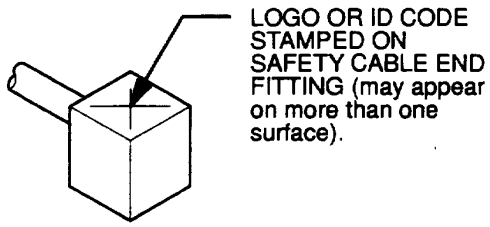

Figure 2-91. Safety Cable Identification Stamp.

g. *Safety Cable on Turnbuckles.* The standard procedure for securing turnbuckles with safety cable is shown in figures 2-92 and 2-93.

(1) A self looping safety cable is threaded through the turnbuckle. One end shall be wrapped in one direction around the turnbuckle. The safety cable is then threaded through the hole in the self looping jumper, and terminated with the appropriate application tool.

(2) Safety cable diameter selection for turnbuckle applications, 0.032 inch diameter safety cable shall be used on assemblies where cable diameter is 1/16 inch or smaller, and 0.040 inch diameter safety cable or greater shall be used on turnbuckle cable diameters greater than 1/16 inch.

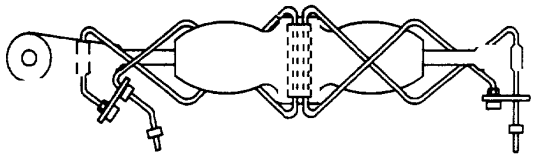

Figure 2-92. Routing of Safety Cable on Turnbuckles

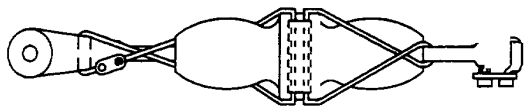

Figure 2-93. Example of Final Safety Cable Turnbuckle Installation

h. *Safety Cable Jacketing for Protection.* (See figure 2-94). It is recommended to use a tubular jacket over safety cable when it is installed in a location where it is in contact with (or may contact) surfaces which may damage the safety cable. A tubular jacket material shall be capable of meeting the temperature range of the application, it shall be resistant to oil and chemicals.

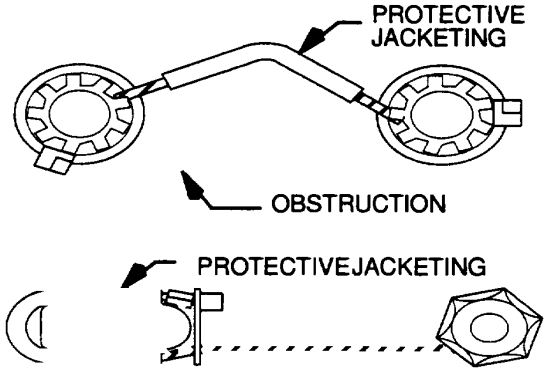

Figure 2-94. Cable jacketing for Protection

2-20. Safety Cable Application Tools.

a. *Procedures.* When safety cable is used, the following basics apply for the application tools and calibration equipment.

(1) Minimize mixing of safety wire and safety cable.

(2) Install the ferrule cartridge into the tool body under the handle grip.

NOTE

When loading and using the safety cable hand tool, be certain that the correct size safety cable kit is being used with the tool.

(3) Install the safety cable through the fasteners to be secured.

(4) The nose can index to four positions at 90° increments. To select the position, push the nose in towards the tool and rotate to the desired position. Release the nose, if the nose does not lock into the indexed position, turn it slightly until it does. See figure 2-95.

(5) Insert the free end of the cable through the ferrule in the cartridge, and remove the ferrule by pulling the cable away from the end of the cartridge. See figure 2-95.

Downloaded from http://www.everyspec.com

NOTE

Do not release the free end of the cable until it has been inserted through the tool nose.)

(1) Insert the free end of the cable through the tool nose (see figure 2-96) and slide the tool along the cable to the fastener being secured. See figure 2-97.

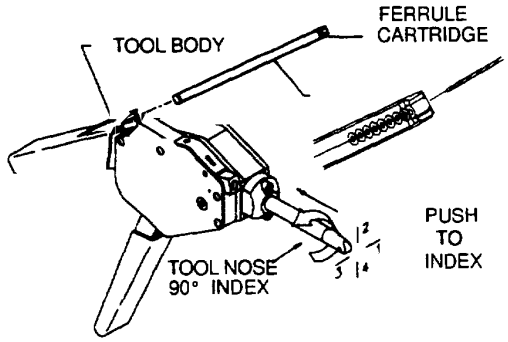

Figure 2-95. Pre-Set Tension Safety Cable Tool

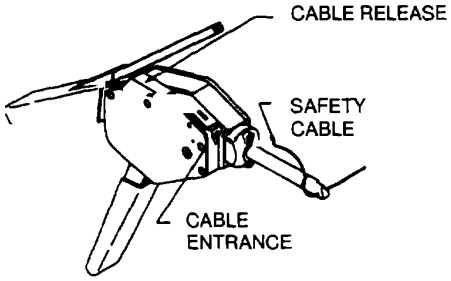

Figure 2-96. Pre-Set Tension Safety cable Tool

2-21. Types of Safety Cable Tools.

a. *The Pre-Set Tension Tool.* (See figures 2-95 and 2-96). Insert the free end of the cable into the cable entrance and continue to push the cable into the cavity. When the free end of the cable appears at the bottom of the tool, grip the cable and pull the slack from the cable until resistance is felt. Begin removing slack from the cable by repeatedly closing the tool handle allowing the handle to open fully before closing again. When all slack is removed from the cable, snug the tool against the fastener by using several short strokes of the handle. Release the handle to the full open position and fully close the handle to crimp securely and cut flush.

CAUTION

It is important on this final stroke to hold the tool as steady and perpendicular to the cable as possible while completing a full stroke. This assures consistent tensioning of the cable. See figure 2-97.

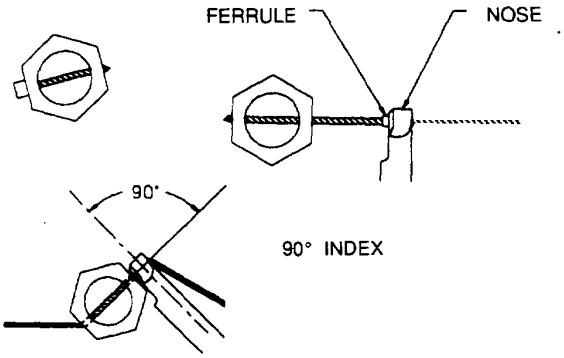

Figure 2-97. Position of Safety Cable Too,

b. *Adjustable Tension Tool.* (See figure 2-98). Thread the safety cable through the fastener, ferrule, and tool nose in the same way as with other models. Wrap the cable one full revolution (clockwise) around the tension wheel, and with slight pressure applied by pulling the cable, secure the cable into the slot. Rotate the tension knob until several clicks are heard and felt. If additional tension is required, adjustment can be made with the tension adjuster on the opposite side of the tool.

CAUTION

Do not overtighten safety cable. It is a good practice to find a tension setting which removes the slack from the cable, (in order to meet the flex limit requirement) without over stressing the safety cable components.

(1) Completely close the handle to crimp and cut the cable. Hold the tool steady and perpendicular to the cable to maintain consistent cable tension. Release the handle and remove the tool from the crimped ferrule. Remove the excess cable segment from the tool prior to the next application.

(2) If it is more convenient to use the adjustable tension tool with the knob located on the opposite side, remove the retaining ring located below the tension adjuster, slide the knob assembly out of the tool body, and re-insert it on the opposite side. Re-install the retaining ring. See figure 2-98.

Downloaded from http://www.everyspec.com

NOTE

When using a hand tool, the tool handle is to remain fully open during the cable entry process (in both tool models). The handle is to be actuated in the pre-set tension model after the tension pawl is engaged with the cable, and in the adjustable tension model only after the desired tension is achieved.

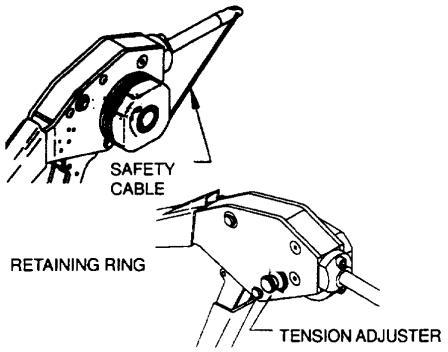

Figure 2-98. Adjustable Tension Safety cable Tool

c. *The Pneumatic Safety Cable Application Tool.* (See figure 2-99). Connect the pneumatic safety cable tool to a clean, dry air supply of 80 to 100 psi.

(1) Install the safety cable through the fasteners which are to be secured.

(2) The nose can be indexed to four positions in 900 increments. To select the position, push the nose in towards the tool and rotate to the desired position. Release the nose. If the nose does not lock into the indexed position, turn it slightly until it snaps into position and locks.

CAUTION

Do not actuate the tool unless the nose is locked into position. Actuation of the tool without the nose being locked will severely damage the nose or other tool components.

(3) Insert the free end of the cable through the ferrule in the cartridge and remove the ferrule by pulling the cable away from the end of the cartridge. Insert the free end of the cable through the nose of the tool and slide the tool along the cable to the desired position.

(4) Rotate the cable tensioning wheel clockwise if necessary to move the cable entry slot to an accessible position. Align the nose such that the ferrule is pressed squarely against the fastener. Make certain that the ferrule is fully seated into the nose. Insert the free end of the cable into the cable entry slot of the cable tensioning wheel. When the end of the cable exits the wheel, grip the cable and pull the slack from the cable. Do not leave more than 1 1/2" of total slack in the cable.

(5) Press the trigger and hold. The tool will apply tension to the cable, crimp and cut. When the trigger is released, the crimp mechanism will retract (after the cycle is complete), and the tool nose can be moved from the ferrule. The excess cable shall be discarded.

(6) The tension is adjustable by inserting the manufacturer supplied adjustment key into the adjustment port located on the tool handle. Clockwise rotation increases tension, and counter clockwise rotation decreases tension.

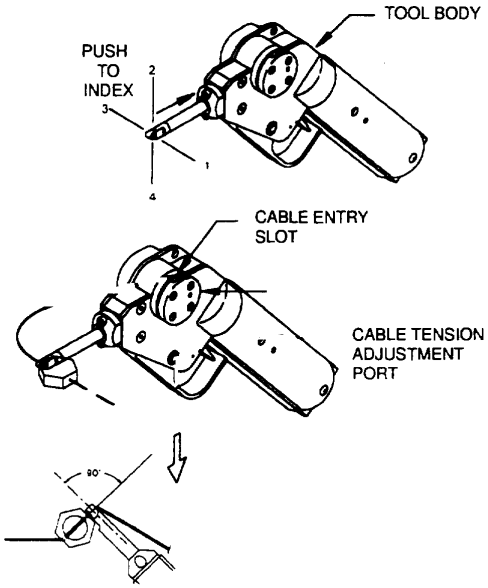

Figure 2-99. Pneumatic Safety Cable Application Tool

2-22. Safety Cable Application Tool Maintenance and Calibration. The safety cable tools should be stored in a clean, dry place when not in use. Clean any debris (especially in the crimp cavity in the tool nose) from the tool with a small brush and solvent if necessary. Lubricate the tool nose (into the crimp cavity) with a drop of oil on a regular basis.

Downloaded from http://www.everyspec.com

a. *Tool Calibration Verification with the Safety Cable Test Fixture or Electronic Pull Tester.*

NOTE

Indenter calibration should be verified periodically and must always be checked if the nose assembly has been removed or changed.

(1) *Use of the calibration test fixture and torque wrench to verify safety cable tool indenter adjustment (see figure 2-100).* Thread the safety cable into the 12 pt. screw and through the swivel, holding the lever against the built-in-stop. If the lever is not kept against the stop, the results may be adversely affected. Terminate the safety cable with the tool being tested.

(2) Apply approximately 2 lbs force to the cable with your finger at the line marked "test area". If the cable touches either the side or bottom surface of the test fixture, remove the cable from the test block, and re-install another safety cable being careful to set the tool tension properly, and to hold the lever against the stop.

(3) Place a calibrated 3/8 inch drive torque wrench (capable of indicating 30 inch/lb. for 0.020 inch safety cable, 70 inch/lb. for 0.032 inch safety cable and 110 inch/lb. for 0.040 inch safety cable) into the square drive hole, orienting the test block and torque wrench on a flat surface. Do not over torque the cable.

SAFETY CABLE DIAMETER INCH	TORQUE WRENCH MINIMUM PULL-OFF-LOAD INCH-POUNDS
0.020	30 in/lb
0.032	70 in/lb
0.040	110 in/lb

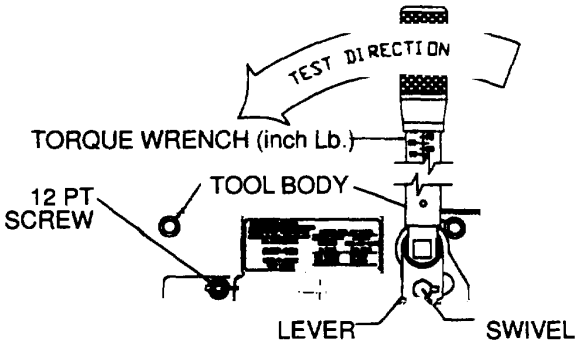

Figure 2-100. Calibration test Fixture and Torque Wrench

(4) The safety cable should remain in place during application of the measured force. Apply approximately 2 lbs. force to the safety cable with your finger at the line marked "test area". If the safety cable touches either the side or bottom surface of the test fixture, the crimp is unacceptable and the tool indenter should be adjusted.

(5) *Use of an electronic pull tester to verify safety cable tool indenter adjustment. (See figure 2-101).* It may be required in some applications to pull test safety cable to destruction. If this is required, an electronic pull tester may be used in place of the calibration test fixture/ torque wrench method. The type of machine pictured in this manual will satisfy this requirement.

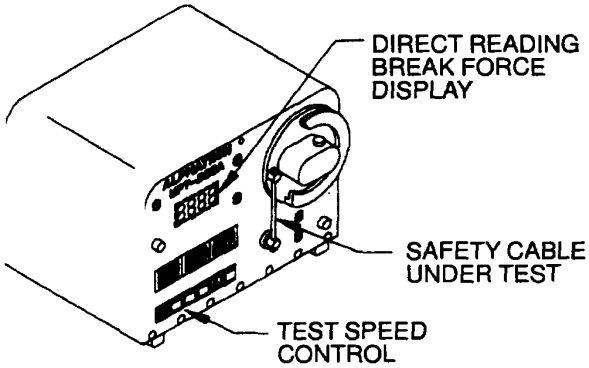

Figure 2-101. Electronic Safety Cable Pull Tester

b. *Indenter Adjustment for all Safety Cable Application Tool Models.*

NOTE

Calibration should be checked frequently by the use of the calibration test fixture, or the electronic pull tester.

(1) Remove the nose assembly by removing the two 8-32 socket head cap screws with a 9/64 inch hex wrench. (See figure 2-102).

(2) Adjust the push-rod adjustment screw with a flat blade screw driver, or the manufacturer supplied adjustment key. See figure 7-103. Turn the push-rod adjustment screw clockwise to loosen the crimp (enlarge the gaging dimension), or counterclockwise to tighten the crimp (reduce the gaging dimension). Replace the mose assembly and the two 8-32 socket head cap screws, being sure that they are firmly tightened. Check calibration as previously described.

Downloaded from http://www.everyspec.com

NOTE

Some tool models utilize a push-rod lock nut. This must be loosened prior to adjustment, and tightened after adjustment with the adjustment key provide by the manufacturer.

CAUTION

Do not adjust the push-rod more than a quarter of a turn at a time, severe adjustment may damage the tool.

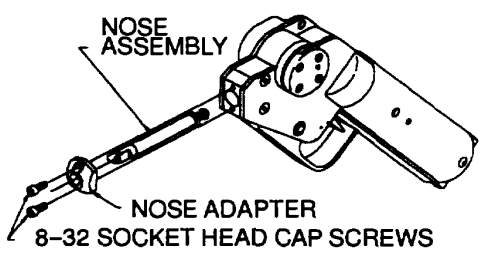

Figure 2-102. Removal of Safety Cable Tool Nose Assembly

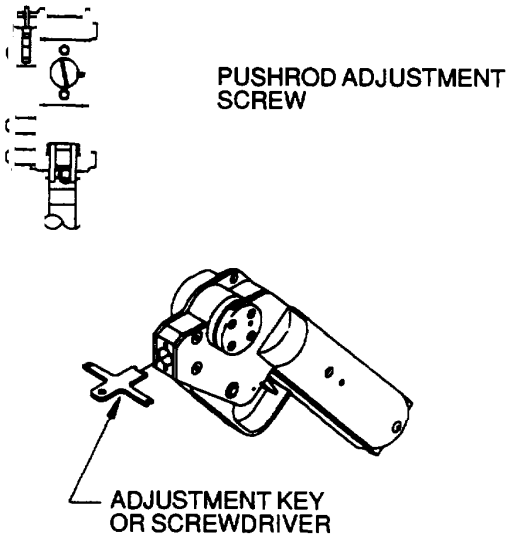

Figure 2-103. Adjustment of Safety Cable Indenter (Same for Hand or Pneumatic Tool Models)

Downloaded from http://www.everyspec.com

CHAPTER 3

RUBBER MATERIALS

3-1. General. All aircraft rubber materials furnished through the Army supply system, locally produced or locally manufactured, which Includes in its composition, natural or synthetic rubber or other materials having similar quality and utilization as rubber shall be considered to have an Indefinite shelf-life (for example gaskets, preformed packings, diaphragms, hoses and flanged seal assemblies).

a. Storage. Storage and handling of aircraft rubber goods and kits, components, or accessories containing rubber goods is the responsibility of all activities engaged in storage or maintenance of air items Storage of rubber goods is as follows:

(1) Store aircraft rubber goods and kits, components, or accessories containing rubber goods In a dark, cool, dry place, protected from excessive heat and from exposure to strong air currents, dampness, and dirt.

(2) Store away from electric motors or other equipment giving off heat or ozone.

NOTE

Items will be left in original pack until they are expended or consumed in actual maintenance process.

b. Inspection. Inspection of aircraft rubber goods and kits, components, or accessories containing rubber goods will be accomplished at time of installation and as follows:

- A qualified mechanic will determine serviceability of item by visually inspecting for deterioration, leaking, corrosion, cracking brittleness, and deformity.
- Items that have no defects will be considered serviceable.
- If the serviceability of an aircraft component or accessory containing rubber goods is questioned due to Improper storage conditions, the Item will be functionally tested prior to Installation.
- Aircraft components or accessories removed from the original pack and not immediately Installed will be preserved and repacked.
- Items determined to be unserviceable will be disposed of through the proper supply channels.

3-2. Tires. Identification and storage of rubber tires are explained in the following paragraphs

a. Tire Identification. Tires are classified according to pressure, profile, and contour in MIL-T-5041. Helicopter tires are Identified by the word Helicopter on the sidewall. Tubeless tires are identified by the word Tubeless on the sidewall. Ice grip tires have wire or spring coil inserts molded to the tread to aid in gripping icy runways. Nonskid tires have a ribbed tread design. Refer to TM 55-2620-201-24 for additional information.

b. Tire Storage. In addition to the general storage requirements for rubber materials in paragraph 3-1a, the following procedures will be employed In the storage of tires.

(1) Store tires in racks so that each is In a vertical position and each is holding its own weight. Flat spots, which form on the tread during vertical storage, will not harm the tire.
(2) Stack tires vertically. Tires should not be stacked horizontally because of the possibility of crushing the bottom line.
(3) Clean tires exposed to grease and oil by washing with mild soap, Federal Specification P-S-620, and water.

3-3. Tubes. Identification and storage of rubber tubes are explained in the following paragraphs.

a. Tube Identification. Tubes are molded from natural and GRI (butyl) rubber. The GRI tube is identified by a blue strip on the inner circumference of the tube.

b. Tube Storage. In addition to the general storage requirements for rubber materials in paragraph

Downloaded from http://www.everyspec.com

3-1a, the following procedures will be employed in the storage of tubes:

(1) Do not store completely deflated tubes. A small amount of air should be left in each tube to prevent inner surfaces from sticking together.
(2) When cardboard boxes are not available, dust tubes with Talc, MIL-T-50036, and wrap in paper, Federal Specification UU-P-268.
(3) Mark all packages to indicate size, type of tube, date of manufacture, and stock number.
(4) Inspect all tubes having balance patches to insure that patches follow contour of inflated tube. Service life of tubes should not be affected by loose patches.

3-4. Fuel and Oil Cells. Identification and storage of fuel and oil cells are explained in the following paragraphs. Refer to TM 1-1500-204-23-3 for additional information.

a. Fuel Cell Identification. A fuel cell is a flexible bag contoured to the shape of a particular fuselage or wing cavity. It is designed to contain fuel. Common names given to fuel cells are trade names such as Vithane, Pliocel, and Line-a-cell. Fuel cells are made In three basic types self-sealing, bladder, and combination.

(1) Self-sealing cell. The self-sealing cell is a fuel container which seals Itself when objects penetrate its walls. The sealing action reduces fire hazard and preserves the aircraft fuel supply. Fabric material is used in construction of this type of cell to strengthen cell walls and to protect the nylon barrier from scuffing.
(2) Bladder-type cell. This type of cell is non-self-sealing and is of light-weight construction. It is installed inside a metallic shell, a wing cavity, or the fuselage cavity of an aircraft It is removable for repairs.
(3) Combination self-sealing and bladder cells. These cells consist of self-sealing and bladder constructions, since they contain both bladder and self-sealing properties Most of these cells are self-sealing only on the bottom and aft sections

b. Fuel Cell Storage. In addition to the general storage requirements for rubber materials in paragraph 3-la, the following paragraphs describe the storage of fuel cells.

(1) Storing flexible bladder type or Goodyear nylon (Pliocel) fuel cells. Use the following procedures for storing flexible bladder type or Goodyear nylon (Pliocel) fuel cells:
   (a) Roll the fuel cell as smoothly as possible.
   (b) Place a roll of corrugated fiberboard, PPP-F-320, covered with polyethylene sheeting, L-P- 378, inside each fold or roll to prevent creasing.
   (c) Wrap the cell in wrapping paper, UU-P- 268, MIL-P-17667, grade A barrier material, MIL-B-121, or polyethylene sheeting, L-P-378.
   (d) Pack the wrapped cell in a fiberboard box and close box by any suitable means.

(2) Storing self-sealing fuel cells. Self-sealing fuel cells cannot be folded or collapsed for storage; however, they will be wrapped in accordance with sub-paragraph 3-4b(1). Cells having suspension straps will be hung in a cleated plywood box, PPP-B- 601, or other suitable wooden box in the normal on-aircraft position with dunnage used to support this configuration. Cells not having suspension straps must be supported Inside and out with dunnage. Dunnage may consist of wood, fiberboard, PPP-P-291 or PPP-F-320, rubberized hard, PPP-C-1120, or foam plastics, PPP-C-850, MIL-P- 26514. All dunnage will be wrapped with polyethylene sheeting, L-P-378, or a similar plastic to prevent abrasion and contamination. The dunnage will be so placed as to provide support for the fuel cells in the box in the on-aircraft configuration. All self-sealing fuel cells must be supported to prevent collapse and creasing. When boxes cannot be obtained, the fuel cells may be stored for a short period of time on a specially constructed rack which will adequately support the cells. Cells may also be temporarily stored with only the interior dunnage in place; however, these cells cannot be stacked.
(3) Marking stored fuel cells. Mark the fuel cell In accordance with MIL-STD-129. If the fuel cell is temporarily stored and not boxed, the same information will be placed on a tag and the tag securely fastened to the cell.

Downloaded from http://www.everyspec.com

NOTE

- Store cells in a cool, dry area, free from drafts, dust, and ozone, and out of direct sunlight or direct contact with the ground
- Stack crated cells on widest side of crate, never on end, and not to the extent that crushing of lowest crate will result
- Arrange cells in storage to ensure use of oldest units first.

c. *Oil Cell Identification*. An oil cell is a form of oil tank that has self-sealing capability. It can be identified by a compound covering the interior walls. This compound will seal the oil cell if it is punctured by a projectile. Self-sealing oil cells are repaired in the same way as self-sealing fuel cells. However, greater care must be taken in cleaning the cell in preparation for repair work. Refer to TM 1-1500-204-23-3, Chapter 3, for additional information.

d. *Oil Cell Storage*. The applicable aircraft maintenance manual shall be used for specific storage procedures. The following general procedures apply to all oil cells:

(1) Drain all oil from oil cell.
(2) Disconnect oil lines and tubing.
(3) Clean oil tank with appropriate solvent.
(4) Drain solvent.
(5) Dry tank with filtered compressed air.
(6) Cover inside of oil cell with lubricant.
(7) Replace filler cap.

3-5. Shock Absorber and Elastic Exerciser Cords. Identification, inspection, testing, and storage of shock absorber and elastic exerciser cords are explained in the following paragraphs.

a. *Cord Identification*. Colored threads in the outer cover are used to indicate date of manufacture. The color code for threads is given in table 3-1. Bungee and shock absorber cords have two threads to indicate year and one thread to indicate quarter. Elastic exerciser cords have three threads to indicate year and one for quarter. Elastic shock cord, used in some compass mounts, is covered with solid black braid with no colored thread to indicate date of manufacture. Although these cords do not have a limited shelf life, they must pass the elongation test below before installation.

b. *Cord inspection*. All cords installed in aircraft shall be visually inspected at each intermediate and periodic inspection. Any cord that shows irregularity in diameter must be replaced. Cords found to be over 5 years old will not be considered serviceable.

(1) Tagging. Cords in stock shall be inspected and tested every 6 months as specified below. At time test is made, a serviceable parts tag shall be affixed to the spool or cord as follows:

INSPECTED ....
DATE ....
ACCORDING TO TM 1-1500-204-23-6
TO BE REINSPECTED AND RETESTED 6 MONTHS FROM DATE HEREON

NOTE

Sections of cord shipped to service activities shall have a duplicate tag affixed to provide information for reinspection date.

(*2) Methods of inspection*. Cords in stock at all activities other than depots shall be visually inspected for irregularities in diameter or other evidence of deterioration and to see that serviceable parts tag is attached as specified above.

(3) Test requirements. Cords that fail to meet test requirements shall not be installed on aircraft, but will be made available for use on ground equipment or for other uses

Downloaded from http://www.everyspec.com

Table 3-1. Color Coding

Year Identification		
1984	- --------	Yellow
1985	- --------	Black
1986	- --------	Green
1987	- --------	Red
1988	- --------	Blue
1989	- --------	Yellow
1990	- --------	Black
1991	- --------	Green
1992	- --------	Red
1993	- --------	Blue

Quarter Identification	
January February March	Red
April May June	Blue
July August September	Green
October November December	Yellow

NOTE

For succeeding years and quarters, this cycle repeats.

(4) Reinspection. Cords requiring reinspection will be retested and retagged If facilities are available. If facilities are not available, cords shall be returned to depot for reinspection.

(5) Condemnation. Cords not suitable nor required for ground equipment or other uses shall be administratively condemned or condition-condemned.

c. Cord Testing. Cords requiring testing shall be tested when facilities are available. When facilities are not available, return cords to depot for testing. Elongation testing should be accomplished in the following manner:

(1) Test bungee or endless ring type cord as a complete unit using suitable jigs or spools and test load specified in table 3-2.

NOTE

Jigs or spools for stretching shock absorber cords should be smooth and not less than 1-1/2 inches in diameter to prevent damaging cords during testing.

(2) Prepare straight and elastic exerciser cords for testing by marking 6-inch gauge lengths on one side of cord. Use a soft lead pencil for marking.

(3) Mark bungee cords with 6-inch gauge marks penciled on opposite sides of ring.

(4) Attach cord to be tested to suitable jigs or spools. Apply specified test pressure slowly.

(5) After test load has been applied, remove cord from testing and measure between gauge marks.

(6) Reject cords which elongate more than 100 percent during test

(7) Reject cords which have gauge marks more than 6-1/4 inches apart 10 minutes after pressure is released.

(8) After testing, fill in and attach a SERVICEABLE TAG - MATERIEL (DD Form 1574) to cord with a note: To be reinspected and retested 6 months from date hereon.

d. Cord Storage. In addition to the general storage requirements for rubber materials in paragraph 3-1a, the following practices shall be employed during storage of shock absorbers and elastic exerciser cords:

(1) Store cords so they shall not be subject to stress.

(2) Keep stocks of cord at a minimum, but consistent with operating requirements.

Downloaded from http://www.everyspec.com

Table 3-2. Test Loads

Cord	Diameter inches	Load pounds
	1/4	13
	3/8	80
Straight Cord	1/2	155
	5/8	225
	3/4	360
	3/8	155
	7/16	235
	1/2	315
Endless Ring Bungee	9/16	380
	5/8	450
	11/16	585
	3/4	720
	13/16	1000
Elastic Exerciser	3/16	5
	5/16	7

3-6. Gaskets and Packings. The methods of identification, military classifications, types, uses, and storage of gaskets and packing materials are presented in the following paragraphs.

a. Gasket and Packing Types. Gasket and packing material types and uses are described in the following paragraphs.

(1) Synthetic rubber and cork gasket material MIL-C-6183 This material is available in soft, medium, and firm grades it is classified as aromatic fuel and oil resistant.

(2) Synthetic rubber gasket material MIL-R-6855 This material is classified as fuel, oil, and non-oil-resistant. Use oil-and non-oil-resistant gaskets with acrylic plastics. This material is available in grades 40, 60, and 80, each of which corresponds to a durometer hardness value.

(3) Cork sheet and gasket material Federal Specification HH-C-576. This cork composition is available in sheet and gasket. Light composition is recommended for use as a cushion between glass and metal. Medium-light composition is recommended for use on cover plates and gear cases. Medium-heavy composition is recommended for uses similar to medium-light composition where less than 1/16-inch thickness, and greater tensile strength are required. Heavy composition is recommended for use with transformers, oil-filled electrical equipment, and as a packing or bearing seal for rotating members.

(4) Synthetic or natural rubber gasket and packing material Federal Specification HH-G-156 This material is used for all types of packings and gaskets except hatches and watertight and airtight doors. It is classified as soft, medium, and hard, and is available in sheets, molded shapes, strips, and fabricated gaskets.

WARNING

O-ring splicing and O-ring assortment kits do not meet the specific requirements for O-ring usage on aviation equipment and are not authorized for use on Army aircraft. Use of unauthorized O-rings may compromise the integrity and safety of equipment and personnel.

CAUTION

Use MS28775 O-ring only where specified. Leakage will occur below -65°F (-540C).

Downloaded from http://www.everyspec.com

NOTE

- O-rings and packings removed from disassembled equipment must be discarded in exceptional circumstances, engineering approval may be granted to reuse O-rings and packings. Requests must be made to AVSCOM, AMSAV-E for consideration.

- Use MS dash numbers to determine correct applications for O-ring packings and gaskets.

(5) O-ring packings and gaskets MS28775. These are designed to operate in the temperature range of -65 to 275°F (-54 to 135°C). They are used on the moving parts of an assembly.

(6) O-ring packings and gaskets MS28775. These are designed to operate in the temperature range of -65 to 275°F (-54 to 135°C). They are used to seal non-moving components.

(7) V-ring packings AN6225. These are designed to operate in the temperature range of -65 to 160°F (-54 to 71 °C). They are used on the moving parts of an assembly.

(8) O-ring gaskets MS28778. These are used as a compression-type seal on a straight-threaded, flared-tube, connection fitting where a temperature range of -65 to 158°F (-54 to 70°C) is required.

b. Gasket and Packing Identification. Identification of gasket and packing material is shown in table 3-3 and the following paragraphs.

(1) Synthetic rubber and cork gasket material MIL-C-6183. Sheet material is identified by color, class, grade, manufacturer's identification, and symbol of main components. Molded shapes are marked with a dot or stripe. Red indicates aromatic fuel-resistant material and white indicates oil-resistant material.

(2) Synthetic rubber gasket material MIL-R- 6855. Sheet and strip materials are marked with the appropriate color in 3/8-inch high characters to show class, grade, and manufacturer's identification or compound number. Extrusions and tubing are marked with the appropriate color once every 6 inches or at least twice on small pieces. Molded shapes are marked with the proper symbol in the appropriate color on each piece, and by part number when required. Small parts are marked with the proper colored dot or stripe on the edges. Red indicates fuel-resistant. White indicates oil-resistant. Blue indicates non-oil-resistant. White and green indicates oil-resistant for use in contact with acrylic plastic. Blue and green indicates non-oil-resistant for use in contact with acrylic plastic.

(3) Cork sheet and gasket material Federal Specification HH-C-576. This cork composition is available in sheet and gasket, which is identified by markings on shipping containers.

(4) Synthetic or natural rubber gasket and packing material Federal Specification HH-G-156. This material is identified by marking on shipping containers.

(5) O-ring and V-ring packings and gaskets. O-rings and V-rings are identified by markings on shipping containers.

c. Storage. Store packings and gaskets in a cool, dark dry place that is protected from excessive heat and exposure to dampness, dirt, or strong air currents. Do not store in the proximity of electric motors or other equipment that give off heat and ozone. These items shall be stored and inspected as outlined in paragraph 3-1.

NOTE

No more than a 3-month supply of synthetic rubber, MIL-R-6855, should be kept in stock.

Downloaded from http://www.everyspec.com

Table 3-3. Identification of Rubber Materials

Specification	Type or class	Forms available	Grade and Intended use
MIL-R-2765	Rubber Material, Synthetic Oil Resistant	Sheet Strip Molded	For use as a gasket where resistance to oil and serviceability to temperatures above -20°F (-29°C) is required
MIL-C-3133	Cellular Rubber Products, General Purpose (See Specification)	Sheet and Products as specified	For use in the absorption of noise, shock, or vibration, or where resiliency is required.
MIL-R-5001	Type I, Cored-Soft, Medium, Firm. Type II, Uncored-Soft, Medium, Firm, Extra Firm	Sheet or Molded Latex Foam Sponge	Crash protection pads, seat cushions, goggle cushions, and other uses requiring a material capable of absorbing shock, damping vibration, and having low compression resistance Grade A-Flame resistant. Grade B-Nonflame resistant, Synthetic. Grade C-Nonflame resistant, natural or combinations of natural and synthetic
Federal Specification ZZ-R-765 (Temperature Resistant)	Class I - Extreme low temperature resistant. Class II - High temperature resistant	Sheet, Strip (or tape), Extruded shapes, Molded Shapes, and Coated Fabrics as ordered	Silicone rubber will be used for extreme high or low temperature -100 to 450°F (-73 to 232°C). Due to poor physical properties of this material, it will be used only when other types of rubber will not withstand the extreme temperatures.

Downloaded from http://www.everyspec.com

Table 3-3. Identification of Rubber Materials

Specification	Type or class	Forms available	Grade and intended use
MIL-R-6130 (Chemically Blown)	Classes-Soft, Medium, Firm	Molded, Sheet and Shapes	Crash protection pads, radio or Instrument mounts, or any other place where protection from shock or vibration is required. Do not use where sponge is in continuous contact with skin or where application involves tensile loading. Grade A-Oil-resistant at -40°F (-40°C). Grade B-Non-oil-resistant. Grade C-Low temperature to -54°F (-48°C), non-oil resistant.
MIL-R-6855	Class I Class II Class III Class IV Class V	Sheet, Strip, Tubing, Extruded Shapes, Molded Shapes, as ordered	General aeronautical use where rubber-like synthetic material is required. Class I-Fuel resistant; Class II - Oil resistant; Class III-Non-oil-resistant; Class IV-Oil resistant (for use in contact with acrylic plastics). Class V-Non-oil-resistant (for use in contact with acrylic plastics). Grades 40, 60, 80-Designate normal durometer hardness values.

Downloaded from http://www.everyspec.com

CHAPTER 4

METALS

4-1. General. Aluminum, magnesium, steel, and titanium alloys are explained in the following paragraphs.

4-2. Aluminum Alloys. Aluminum is combined with various percentages of such elements as chromium, copper, magnesium, silicon, and zinc to form alloys. This combination results in a light, strong material. A protective coating, known as Alclad, is applied to many aluminum alloys to give resistance to corrosion.

a. Identification. All wrought aluminum and aluminum alloys produced after 1 October, 1954, will be marked in accordance with the new designation system. Procurement orders may continue to employ the old designation until such time when material specifications are changed; therefore, materials will probably be received marked with either designation. Material marked with either new or old designation will be utilized. Aluminum alloys are identified as follows.

(1) Numbering. Wrought aluminum and aluminum alloys are designated by a four-digit index system. The first digit of the designation serves to indicate alloy groups. The last two digits identify the aluminum alloy or indicate the aluminum purity. The second digit indicates modifications of the original alloy or impurity limits.

(2) Designation for alloy groups. In the four-digit index system, the first digit indicates the alloy group as shown in table 4-1. Thus, 1xxx indicates aluminum of 99 00 percent minimum and greater; 2xxx indicates an aluminum alloy in which copper is the major alloying element; 3xxx, an aluminum alloy with manganese as the major alloying element, etc. Although most aluminum alloys contain several alloying elements, only one group, 6xxx for alloys with magnesium and silicon, designates more than one alloying element.

(3) Designation conversions. Aluminum alloy designation conversions are listed in table 4-2 and explained in the following paragraphs.

(a) Aluminum. In the 1xxx group for aluminum of 99.00 percent minimum and greater, the last two of the four digits in the designation indicate the minimum aluminum percentage. These digits are the same as the two digits to the right of the decimal point in the minimum aluminum percentage when it is expressed to the nearest 0.01 percent. The second digit in the designation indicates modifications in impurity limits. If the second digit in the designation is zero, it indicates that there is no special control on individual impurities, while integers 1 through 9 which are assigned consecutively as needed, indicate special control of one or more individual impurities. Thus, 1030 indicates 99.30 percent minimum aluminum without special control on individual impurities and 1130, 1230, 1330, etc., indicate the same purity with special control on one or more impurities. Likewise, 1075, 1175,1275, etc., indicate 99 75 percent minimum aluminum, and 1097, 1197, 1297, etc., indicate 99.97 percent.

(b) Aluminum alloys. In the 2xxx through 8xxx alloy groups, the last two of the four digits in the designation have no special significance but serve only to identify the different alloys in the group. Generally, these digits are the same as those formerly used to designate the same alloy. Thus, 2014 was formerly 14S, 3003 was 3S and 7075 was 75S For new alloys, these last two digits are assigned consecutively beginning with xx01. The second digit in alloy designation indicates alloy modifications. If the second digit in the designation is zero, it indicates the original alloy; integers 1 through 9, which are assigned consecutively, indicate alloy modifications. In the former system, letters were used to designate alloy modification. These were assigned consecutively beginning with A. Thus, 17S is now 2017 and A17S is 2117, 18S is 2018 and B18 is 2218.

(4) Experimental alloys. Experimental alloys are also designated in accordance with this system, but they are indicated by the prefix X. The prefix is dropped when the alloy becomes standard. During development, and before they are designated as experimental, new alloys are identified by serial numbers assigned by their originators. Use of the serial number is discontinued when the X number is assigned.

Downloaded from http://www.everyspec.com

Table 4-1. Designation for Alloy Groups

Aluminum	99.00 percent minimum and greater major alloying element	1xxx
Aluminum	Copper	2xxx
alloys	Manganese	3xxx
grouped	Silicon	4xxx
by major	Magnesium	5xxx
alloying	Magnesium and silicon	6xxx
elements	Zinc	7xxx
	Other elements	8xxx
Unused series		9xxx

Table 4-2. Aluminum Alloy Designation Conversions (Old to New)

Old alloy	New alloy	Old alloy	New alloy	Old alloy	New alloy
[1]99.3	1230	17S	2017	56S	5056
99.6	1160	A17S	2117	XC56S	X5356
[2]99.75	1175	18S	2018	C57S, K157	5357
99.87, EBIS	1187	B18S	2218	61S	6061
[3]EC	EC	F18S	2618	62S	6062
AA 1S	1095	24S	2024	63S	6063
BA1S	1099	25S	2025	66S	6066
CA1S	1197	B25S	2225	70S	7070
AB1S	1085	32S	4032	72S	7072
EB1S,9987	1187	43S,K145	4043	75S	7075
FB1S	1090	C43S, 44S, K143	4343	B77S	7277
AC1S	1070	XE43S	X4543	XA78S	X7178
CC1S, R998	1180	45S	4045	K112	8112
JC1S	1075	50S	5050	K143, C43W, 44S	4343
AD1S	1050	A50S,K155,R305	5005	K145,43S	4043
BD1S	1060	XD50S	X5405	K155, A50S, R305	5005
CD1S, 99.6	1160	A51S	6151	K157,C57S	5357
ED1S	1150	XB51S	X6251	K160, J51S	6951
AE1S	1030	J51S,K160	6951	[4]K162,R306	6003
BE1S	1145	52S	5052	LK183	5083
2S	1100	F25S	5652	K186	5086
3S	3003	53S	6053	R301, Core, 14S	2014
4S	3004	B53S	6253	R305, K155, A50S	5005
XA5S	X3005	XD53S	X6453	[4]R306, K162	6003
11S	2011	E53S	6553	[5]R308	1130
14S, R301, Core	2014	A54S	5154	R399	8099
XB14S	X2214	B54S	5254	R995	1235
XC16S	X2316	X55S	X5055	R998, CC1S	1180

See footnotes at end of table.

Downloaded from http://www.everyspec.com

Table 4-2. Aluminum Alloy Designation Conversions (Old to New) - CONT

Old alloy	New alloy	Old alloy	New alloy	Old alloy	New alloy
EC	[6]EC	18S	2018	B54S	5254
AELS	1030	24S	2024	XC56S	X5356
AD1S	1050	25S	2025	C57S, K157	5357
BD1S	1060	A17S	2117	XD50S	X5405
AC1S	1070	XB14S	X2214	F52S	5652
JC1S	1075	F18S	2618	R306, K162	[10]6003
BC1S	1080	B25S	2225	53S	6053
AB1S	1085	XC16S	X2316	61S	6061
FB1S	1090	F28S	2618	62S	6062
AA1S	1095	3S	3003	63S	6063
BA1S	1099	4S	3004	66S	6066
2S	1100	XA5S	X3005	A51S	6151
R308	[7]1130	32S	4032	XB51S	X6251
BE1S	1145	45S, K145	4043	B53S	6253
ED1S	1150	45S	4045	XD53S	X6453
CD1S, 99 6	1160	C43S, 44S, K143	4353	E53S	6553
99.75	[8]1175	XE43S	X4543	J51S, K160	6951
CC1S, R998	1180	A50S, R305, K155	5005	70S	7070
EB1S, 99.87	1187	50S	5050	72S	7072
CA1S	1197	52S	5052	75S	7075
99.3	[9]1230	X55S	X5055	XA78S	X7178
R995	1235	56S	5056	B77S	7277
11S	2011	LK183	5083	R399	8099
14S, R301, Core	2014	K186	5086	K112	8112
17S	2017	A54S	5154	XB80S	X8280

[1] Cladding on Alclad 24S (Alclad 2024).
[2] Cladding on No. 2 Reflector Sheet.
[3] EC - The designation for electrical conductor metal is not being changed since it is so firmly established in the electrical industry.
[4] Cladding on R301 and Alclad 14S (Alcald 2014).
[5] No. 1 Reflector Sheet.
[6] EC - The designation for electrical conductor metal is not being changed since it is so firmly established in the electrical industry.
[7] No. 1 Reflector Sheet.
[8] Cladding on No 2 Reflector Sheet.
[9] Cladding on Alclad 2024 (Alclad 24S).
[10] Cladding on Alclad 2014 (R301 and Alclad 14S).

Downloaded from http://www.everyspec.com

(5) Temper designation. The temper designation follows the alloy designation and is separated from it by a dash (refer to table 4-3). The fullhard condition is classified as -H1 8; 3/4-hard as -H16, 1/2-hard as -H14, and 1/4-hard as -H12.

(6) Coding. Identification of aluminum alloy is assured by marking each piece. Marking is accomplished, at the mill, as outlined in the following paragraphs (a) and (b).

(a) Sheet, plate, and bar (3/8 inch or larger in width). These pieces are marked by painting required information listed below along the length of each piece.

- Manufacturer's name or trademark.
- Specification number
- Nominal thickness (sheet and plate only).

NOTE

Aluminum alloy sheet and plate are marked in rows, approximately 5 inches apart.

(b) Rod and tubing (1/2 inch or larger in diameter). These pieces are marked by stamping manufacturer's name or trademark and specification number along the length.

(7) Marking by painting. Every effort should be made to identify the type of aluminum alloy, when it has not been marked by the mill, and identification indicated by color marking. The marking should consist of painting color bands on each tube, bar, rod, sheet or plate, using enamel, MIL-E-7729.

NOTE

Aluminum alloys that require marking, but cannot be identified and marked, should not be used for repair of aircraft.

(a) Method. There are ten colors used in this identification marking system to represent numbers 1, 2, 3, 4, 5, 6, 7, 8, 9, and 0 (refer to table 4-4). These ten colors are also used to represent letters F, H, O, T, W, A, B, C, D, and S. A combination of these colors, representing a combination of numbers and letters, are used to mark material to denote its material designation. For example, aluminum alloy with material designation 2218-T6 is marked green, space, green, blue, white, space, yellow, and red (see figure 4-1). The commercial designation, AISI (American Iron and Steel institute), and SAE (Society of Automotive Engineers) numbers are utilized as material designation numbers.

Table 4-3. Temper Designations

-F	As fabricated
-0	Annealed, recrystalized
-H	Strain hardened
-H1	Plus one or more digits. Strain hardened only
-H2	Plus one or more digits. Strain hardened and stabilized
-H3	Plus one or more digits. Strain hardened and stabilized
-W	Solution heat-treated unstable temper
-T	Treated to produce stable other than -F, -O, or -H
-T2	Annealed (cast products only)
-T3	Solution heat-treated and then cold worked
-T4	Solution heat-treated
-T5	Artificially aged only
-T6	Solution heat-treated and then artificially aged
-T7	Solution heat-treated and then stabilized
-T8	Solution heat-treated, cold worked, and then artificially aged
-T9	Solution heat-treated, artificially aged, and then cold worked
-T10	Artificially aged and then cold worked

Downloaded from http://www.everyspec.com

Table 4-4. Color Code

Color	Equivalent number	Equivalent letter
Black	0	S
Blue	1	F
Green	2	H
Olive Drab	3	0
Yellow	4	T
Orange	5	W
Red	6	A
Maroon	7	B
White	8	C
Gray	9	D

(b) Procedure The procedures for marking aluminum by painting are as follows:

WARNING

Drycleaning solvent is flammable and solvent vapors are toxic. Use P-D-680, Type II Solvent in a well-ventilated area. Keep away from open flames. Avoid prolonged solvent contact with skin.

1 Clean all grease, dirt, and foreign matter from the surface to be painted using drycleaning solvent, Federal Specification P-D-680.

2 Paint each item with parallel stripes of equal width, 1/2 to 3/4 inch wide, placed side by side and in sequence so that when read from nearest end of bar towards the middle, the material designation is shown in figure 4-1. Cross-reference of old and new color code is presented in table 4-5.

3 Leave a space between the stripes of not more than 1/4 inch, when two or more like colors appear adjacent to each other.

4 Leave a space of 3/4 to 1 inch between basic color number stripes and temper and strain hardening color stripes.

(8) Types. Aluminum alloy types are listed in table 4-6.

b. Handling. In some instances, serviceable aluminum alloy parts and sheet have been disposed of due to lack of knowledge by inspection personnel as to the effect of various depth scratches on the strength and corrosion resistance of clad alloy. Also, attempts have been made to remove scratches from aircraft skin by sanding, buffing, or polishing, resulting in removal of much of the cladding material and causing decrease in strength and corrosion resistance. Assemblies fabricated from clad aluminum alloy sheet will not be rejected by inspection personnel, unless the defect is of sufficient depth to adversely affect the mechanical properties or cover sufficient area to impair the corrosion resistance of the assembly. Scratches or abrasions that do not penetrate the cladding will not affect corrosion resistance. Scratches resulting from normal handling and processing of clad aluminum alloy sheet rarely extend through the cladding to penetrate the core.

CAUTION

Do not attempt to remove scratches or other surface defects by sanding or buffing. Such operations remove the protective layer of cladding.

(1) Effects of scratches. Scratches of various depths have different effects on clad aluminum alloys. Some scratches remove enough of the cladding materials to cause a decrease in strength and corrosion resistance.

Downloaded from http://www.everyspec.com

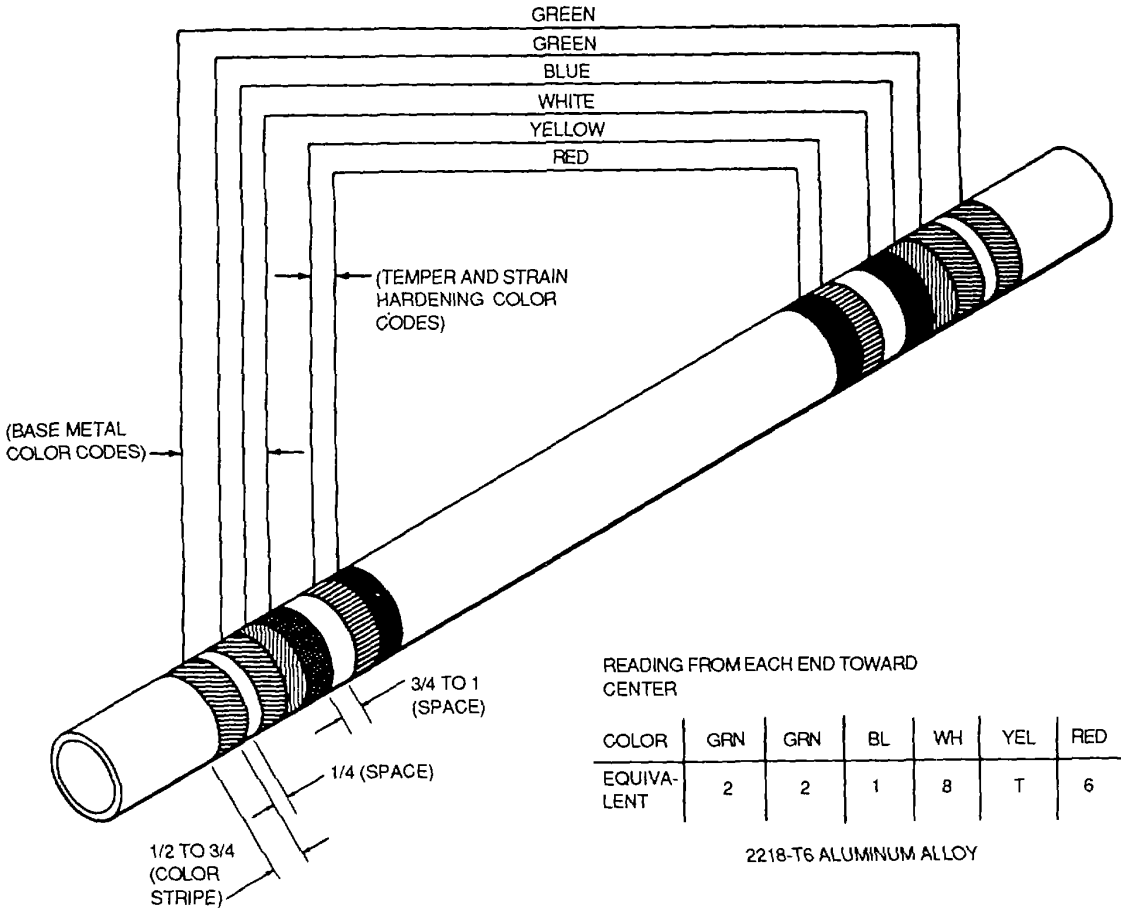

READING FROM EACH END TOWARD CENTER

COLOR	GRN	GRN	BL	WH	YEL	RED
EQUIVA-LENT	2	2	1	8	T	6

2218-T6 ALUMINUM ALLOY

NOTE
DIMENSIONS SHOWN ARE IN INCHES

Figure 4-1. Example of Color Marking

Downloaded from http://www.everyspec.com

Table 4-5. Cross Reference of Old and New Color Code

Aluminum alloy number	Old color	New color
	Aluminum	
1100	White	Green
3003	Green	Olive Drab
2014	Gray	Blue and Yellow
2024	Red	Green and Yellow
5052	Purple	Orange and Green
6053	Black	Orange and Olive Drab
6061	Blue and Yellow	Red and Blue
7075	Brown and Yellow	Maroon and Orange

Table 4-6. Aluminum Alloy Types

Commercial designation	Current specification	Conditions and types available	Superseded Specification
		Sheet and Plate	
1100 (2S)	QQ-A-250/1	O (Annealed) H 12 (1/4-Hard) H14 (1/2-Hard) H16 (3/4-Hard) H18 (Hard) H22 (1/4-Hard Partially Annealed) H24 (1/2-Hard Partially Annealed) H26 (3/4-Hard Partially Annealed) H28 (Hard Partially Annealed) H112 (As Fabricated) F (As Fabricated)	QQ-A-561
3003 (3S)	QQ-A-250/2	Same as 1100	QQ-A-359
Alclad 2014 (Alclad 14S or R301)	QQ-A-250/3	O (Annealed) T3 T4 T42 T6 T451 T651 F	QO-A-255

Downloaded from http://www.everyspec.com

Table 4-6. Aluminum Alloy Types - CONT

Commercial designation	Current specification	Conditions and types available	Superseded Specification
		Sheet and Plate - continued	
2024 (24S)	QQ-A-250/4	O T3 T36 T4 T42 T6 T81 T86 T351 T851 F	QQ-A-355
Alclad 2024	QQ-A-250/5	O T3 T36 T4 T42 T6 T81 T86 T351 F	QQ-A-362
5052 (52S)	QQ-A-250/8	Same as 1100	QQ-A-318
6061 (61 S)	QQ-A-250/11	O T4 T6 T451 T651 F	QQ-A-327
7075 (75S)	QQ-A-250/12	O T6 T651 F	QQ-A-283
Alclad 7075	QQ-A-250/13	O T6 T651 F	QQ-A-287

Downloaded from http://www.everyspec.com

Table 4-6. Aluminum Alloy Types--CONT

Commercial designation	Current specification	Conditions and types available		Superseded Specification
		Bars, Rods, and Shapes		
1100 (2S)	QQ-A-225/1	Rolled, Drawn or Cold Finished	O (Annealed) H12 (1/4-Hard) H14 (1/2-Hard) H16 (3/4-Hard) H 18 (Hard) H112 (As Fabricated)	QQ-A-411
3003 (3S)	QQ-A-200/1	Extruded	O (Annealed) H112 (As Extruded) H (As Fabricated)	QQ-A-357
3003 (3S)	QQ-A-225/2	Rolled, Drawn or Cold Finished	O (Annealed) H12 (1/4-Hard) H14 (1/2-Hard) H16 (3/4-Hard) H 18 (Hard) F (As Fabricated)	QQ-A-356
2011 (11S)	QQ-A-225/3	Free Machining	T3 T8	QQ-A-365 Comp A
2014 (14S)	QQ-A-200/2	Extruded	O T4 T42 T4510 T4511 T62 T6510 T6511	QQ-A-261
2014 (14S)	QQ-A-225/4	Rolled, Drawn or Cold Finished	O T4 T451 T6 T651	QQ-A-266
2017 (17S)	QQ-A-225/5	Rolled or Drawn	O T4 T451	QQ-A-351
2024 (24S)	QQ-A-200/3	Extruded	O T351 T4 T42 T8510 T8511 T81	QQ-A-267

Downloaded from http://www.everyspec.com

Table 4-6. Aluminum Alloy Types--CONT

Commercial designation	Current specification	Conditions and types available		Superseded Specification
		Bars, Rods, and Shapes - continued		
2024 (24S)	QQ-A-225/6	Rolled, Drawn or Cold Finished	O T351 T4 T6 T851	QQ-A-268
5052 (52S)	QQ-A-225/7	Rolled, Drawn or Cold Finished	O H32 (1/4-Hard) H34 (1/2-Hard) H36 (3/4-Hard) H38 (Hard) F	QQ-A-315
6061 (61S) and 6062	QQ-A-200/8	Extruded	O T4 T6	QQ-A-270
6061 (61S)	QQ-A-225/8	Rolled, Drawn or Cold Finished	O T4 T6 T651 T6511	QQ-A-325
7075 (75S)	QQ-A-200/11	Extruded	O T6 T6510	QQ-A-277
7075 (75S)	QQ-A-225/9	Rolled, Drawn or Cold Finished	O T6	QQ-A-282

Commercial designation	Current specification	Composition	Alloy	Temper	Superseded specification
		Castings			
Sand Castings	QQ-A-601 (Specify Composition and Temper)	3 2 3 3 4 4 4	43 356 356 356 195 195 195	F T6 T51 T4 T4 T6 T62	AN-A-4, AN-A-5, AN-A-17, AN-A-23, AN-A-27 AN-A-28, AN-A-31

Downloaded from http://www.everyspec.com

Table 4-6. Aluminum Alloy Types - CONT

Commercial designation	Current specification	Composition	Alloy	Temper	Superseded specification
		Castings - continued			
		4	195	T7	AN-A-33,
		5	214	F	AN-A-35,
		6	142	T21	AN-A-39,
		6	142	T571	and
		7	122	T2	AN-A-40
		5	122	T61	
		8	108	F	
		8	108	T55	
		9	113	F	
		10	355	T6	
		10	355	T51	
		10	355	T7	
		10	355	T71	
		16	220	T4	
		17	40E	T5	
		17	40E	T5	
		18	Allcast	F	
		18	Allcast	T6	
		...	319	F	
		...	319	T5	
		...	319	T6	
		20	Red X-8	F	
		20	Red X-8	T6	
		21	T1	T5	
Permanent and Semi-Permanent Mold Castings and Temper)	QQ-A-596 (Specify Composition	1	113	F	AN-A-23,
		2	122	T551, T65	AN-A-25,
		3	142	T571, T61	AN-A-32,
		4	B195	T4, T6, T7	AN-A-34,
		5	A108	F	AN-A-36,
		6	355	T6, T51, T62, T71	and AN-A-41
		7	43	F	
		8	356	T6, T7	
		9	A132	T551, T65	
		10	B132	T5, T6	
		11	319	F, T6	
		12		T5	
		13		T5	
		14		T5, T7	
		15	750	T5	
		16	A214	F	
		17	333	F, T5, T6, T7	
		18	357	T6	
		19	A750	T5	
		20	B750	T5	

Downloaded from http://www.everyspec.com

Table 4-6. Aluminum Alloy Types - CONT

Commercial designation	Current specification	Composition	Alloy	Temper	Superseded specification
		Castings - continued			
Die Castings	QQ-A-591 (Specify Composition and Temper)	1 2 3 7 10 11 12 12A	13 A13 43 218 A380 380 360 A360 SC114A		AN-A-23 and AN-A-38
Forgings Heat-Treated	QQ-A-367		2014 2017 2018 2025 2218 2618 4032 6061 6066 6151 7075 7076 7079	T4 T4 T6 T6 T61 T61 T6 T6 T6 T6 T6 T61 T6	

Commercial designation	Current specification	Conditions and types available	Superseded Specification
	Seamless Tubing, Round, Square, Rectangular and Other Shapes		
100 (2S)	WW-T-700/1	O (Annealed) H12 (1/4-Hard) H14 (1/2-Hard) H16 (3/4-Hard) H18 (Hard) F (As Fabricated)	WW-T-700/1 B
2024 (23S)	WW-T-700/3	O T3 T4	WW-T-700/3B

Downloaded from http://www.everyspec.com

Table 4-6. Aluminum Alloy Types - CONT

Commercial designation	Current specification	Composition	Alloy	Temper	Superseded specification
		Seamless Tubing, Round, Square, Rectangular and Other Shapes - continued			
3003 (3S)	WW-T-700/2	O H12 (1/4-Hard) H14 (1/2-Hard) H16 (3/4-Hard) H18 (Hard)			WW-T-700/2B
5052 (52S)	WW-T-700/4	O (Annealed) H32 (1/4-Hard) H34 (1/2-Hard) H36 (3/4-Hard) H38 (Hard) F (As Fabricated)			WW-T-700/4B
6061 (61S) and 6062	WW-T-700/6	O T4 T6			WW-T-700/6B
6061 (61S) and 6062 (Hydraulic Quality)	MIL-T-7081	T4 T6			

(2) Allowable defects. The following surface defects do not affect strength or corrosion resistance:

- Scratches that penetrate surface layer but do not extend beneath cladding.
- Small corroded areas that do not extend through cladding, or into core material.
- Stains.

(3) Harmful scratches. Scratches which extend through cladding and penetrate core material create stress concentrations. These stress concentrations will cause fatigue failure when the part is highly stressed or subjected to repeated stress reversals. Use sheet in this condition for nonstressed applications.

(4) Testing. A spot test is a convenient method of determining whether or not a scratch extends through cladding to core. Procedures for performing a spot test are as follows:'

WARNING

Drycleaning solvent is flammable and solvent vapors are toxic. Use P-D-680, Type II Solvent in a well-ventilated area. Keep away from open flames. Avoid prolonged solvent contact with skin.

(a) Clean and degrease sheet with drycleaning solvent, Federal Specification P-D-680.

(b) Prepare a caustic solution of 10 percent (by weight) of sodium hydroxide, Federal Specification 0-S-598, in water.

(c) Place a drop of solution on part of the scratch, and allow 5 minutes for solution to react.

(d) Rinse solution away with water and allow sheet to dry.

Downloaded from http://www.everyspec.com

(e) A black residue at base of scratch where test was made indicates that scratch extends to core.

(f) A white residue in base of scratch indicates that scratch does not extend through cladding.

NOTE

A second spot test in an unscratched area makes it easier to determine whether the residue is black or white.

(5) Disposition. Only portions of sheet which are damaged beyond serviceability will be condemned. Use serviceable portions of damaged sheets for manufacture of smaller parts and assemblies.

c. Storage. Store aluminum alloys in a dry, fully enclosed area not exposed to weather or other corrosion inducing conditions. Store sheet stock of clad and soft alloys on racks. Interleave the sheets with paper, Federal Specification UU-P-553.

CAUTION

- Do not store aluminum alloys near such sources of moisture as steam pipes or water pipes. Damage to alloys may otherwise result.
- Do not store in the proximity of such chemicals as caustics, nitrates, phosphates and acids. Damage to alloys may otherwise result.
- Do not store aluminum packed in original boxes in the open due to moisture condensation. Damage to alloys may other- wise result.
- Ensure that adequate protection is given to all aluminum alloys when transported. Damage to alloys may otherwise result.

4-3. Magnesium Alloys. Light weight is probably the best known characteristic of magnesium. Aluminum is one and one-half times heavier, Iron and steel are four times heavier, and copper and nickel alloys are five times heavier. Pure magnesium has a specific gravity of only 1.74, and alloying does not increase the specific gravity to more than 1.83. Magnesium is commonly alloyed with aluminum, manganese, and zinc to give it greater strength-to-weight characteristics. Magnesium alloys can be cast and fabricated by practically every known method, and have excellent machinability qualities. Also, they possess relatively high thermal and electrical conductivities and are nonmagnetic.

a. Identification. Magnesium types are identified in table 4-7. Composition and marking identification are explained in the following paragraphs.

(1) Composition Identification. Magnesium alloys are identified by their composition designation. The letters indicate the principal alloying element; for example, AZ indicates that the main elements mixed with magnesium are aluminum and zinc. Numbers which follow the letters indicate the percent of each of the principal alloying elements; for example, AZ31 indicates that the alloy is composed of three percent aluminum and one-percent zinc.

(2) Marking identification. Magnesium alloys should be marked with a suitable marking fluid, such as ink, Federal Specification TT-1-558.

(*a) Plate and sheet*. Use characters not less than 3/8 inch in height, in rows of recurring symbols from one edge to the other, giving the following information:

- Manufacturer's name or trademark.
- Federal Specification QQ-M-44 and manufacturer's alloy number.
- The thickness in inches and condition in which furnished.

(b) Rods, bars, and special shaped sections. Mark with the following information at 3-foot intervals along the piece.

- Manufacturer's name or trademark
- The alloy number and Federal Specification QQ-M-31
- The temper in which furnished.

Downloaded from http://www.everyspec.com

Table 4-7. Identification of Magnesium Alloys

Commercial designation DOW[1]	ASTM[2]	AMC[3]	Current specification	Conditions
		Sheet and Plate		
FSI	AX31A	C52S	QQ-M-44	O (Fully Annealed) H24 (Strain Hardened Partially Annealed) H26 (Strain Hardened Partially Annealed)
	AX31B			O (Fully Annealed) H24 (Strain Hardened Partially Annealed)
		Rods, Bars, and Shapes		
JI	AZ61A	C57S	QQ-M-31	As Extruded
FSI	AZ31B	C52S	QQ-M-31	As Extruded
M	MIA	3S	QQ-M-31	As Extruded
01	AZ80A	C58S	QQ-M-31	As Extruded
		Tubing		
FSI	AX31 A	C52S	WW-T-825	
JI	AZ61A	C57S	WW-T-825	
M	MIA	3S	WW-T-825	

Commercial designation DOW	ASTM	AMC	Current specification	Type	Temper
		Castings			
H	A263A	265	QQ-M-56	Sand	AC (As Cast) HT (Heat-Treated and Aged) ACS (As Cast and Stabilized) HTS (Heat-Treated and Stabilized)
M	MIB	403	QQ-M-56	Sand	AC
C	A292A	260	QQ-M-56	Sand	AC HT HTA ACS HTS
	A291		QQ-M-56	Sand	AC HT HTA

See footnotes at end of table.

Downloaded from http://www.everyspec.com

Table 4-7. Identification of Magnesium Alloys - CONT

Commercial designation					
DOW	ASTM	AMC	Current specification	Type	Temper
			Castings - continued		
C	AZ92A	260	QQ-M-56	Perma-nent Mold	AC HT HTA ACS
G	AM100A	240	QQ-M-55	Perma-nent Mold	AC HT HTA- I (Heat-Treated and Partially Aged) HTA-2 (Heat-Treated and Fully Aged)
R	A290	263	QQ-M-38	Die	

[1] DOW-Dow Chemical Company
[2] ASTM-American Society for Testing Materials
[3] AMC-American Magnesium Corporation

(c) Tubing. Mark the following information at 2-foot intervals along tubing.

- Federal Specification WW-T-825 or manufacturer's alloy number.
- Manufacturer's name or trademark.

(d) Castings. Castings should be marked by the manufacturer with pattern number or part number. Marking should be accomplished by a molded, raised symbol.

(e) All forms. Magnesium alloys that cannot be marked as specified in steps (a) through (d) above should have the required information placed on cloth or metal tags and securely fastened to each bundle.

b. Testing. Use a spot test to distinguish magnesium, with no identification markings, from aluminum. Spot test is accomplished as follows:

(1) Clean unknown alloy with a file, removing all paint or other surface coating to expose base metal.

(2) Place a drop of one-half of 1 percent solution of silver nitrate, MIL-W-535, on cleared surface. The metal is magnesium when surface tested turns black. When no reaction occurs, metal is probably aluminum.

NOTE

Cadmium and zinc also react to silver nitrate, but these metals are in thin coatings, and should be removed by filing performed in step (1) above.

c. Storage. Storage treatment, procedures, and precautions are explained in the paragraphs below.

(1) Treatment. Apply chrome-pickle solution to magnesium alloys in accordance with MIL-M-3171 as a protection against corrosion.

(2) Procedure. Store magnesium alloys in racks or bins in a cool, well-ventilated area away from fire hazards, open flames, oxidizing agents, or heat sources.

WARNING

Do not use water or any standard liquid or foam-type fire extinguishers; an explosion may result.

Downloaded from http://www.everyspec.com

(3) Precautions. in case of fire use clean, dry sand, talcum powder, Federal Specification U-T-30, or clean, dry, unrusted cast Iron chips to sprinkle a 1/2- inch deep layer over the area.

4-4. Steel Alloys. Alloy steels are produced by combining carbon steel with other elements to improve the properties of steel. The most common of these alloying elements are silicon, manganese, nickel, vanadium, tungsten, molybdenum, and chromium. Each of these elements gives some special property to the alloy in which it is used. Each element also changes the rate and temperature at which the structure of the alloy changes during heat treatment.

a. Identification. The composition of SAE steels is identified by a numerical index system. Each SAE number consists of a group of digits which are defined as follows:

- The first digit represents type of steel (refer to table 4-8); for example, 4150 indicates molybdenum steel.
- The second digit represents percentage of principal alloying element; for example, 4150 indicates molybdenum steel containing 1 percent molybdenum.
- The remaining digits indicate percentage, in hundredths of 1 percent, of carbon in the alloy, for example, 4150 indicates molybdenum steel containing 1 percent molybdenum and 0.50 percent carbon.

NOTE

The percentages indicated in the SAE numbers are average; for example, the carbon content of SAE 1050 steel may vary from 0.45 to 0.55 percent.

Table 4-8. SAE Numbers Used in Identification of Steels

Type steel	Classification
Carbon	1000 Series
Nickel	2000 Series
Nickel-Chromium	3000 Series
Molybdenum	4000 Series
Chromium	5000 Series
Chromium-Vanadium	6000 Series
Tungsten	7000 Series
Silicon-Manganese	9000 Series

b. Marking.. When steel is received from the mill it should have the following markings: manufacturer's name or trademark, specification number, class, composition, condition, grade or type, and nominal thickness. Sheet and plate steel strips will be tagged. If it has not been marked by the mill, mark as follows:

WARNING

Drycleaning solvent is flammable and solvent vapors are toxic. Use P-D-680, Type II Solvent in a well-ventilated area. Keep away from open flames. Avoid prolonged solvent contact with skin.

(1) Clean all grease, dirt, and foreign matter from surface to be painted using drycleaning solvent, Federal Specification P-D-680.

(2) Paint each item with parallel stripes of equal width, 1/2 to 3/4 inch wide, placed side by side and in sequence so that when read from nearest end of bar toward middle, the material designation is shown (see figure 4-1). Colors of each band must be in accordance with table 4-9. The markings will be painted in stripes on each tube, bar, rod, sheet, or plate using enamel, MIL-E-7729.

Downloaded from http://www.everyspec.com

(3) Leave a space between stripes of not more than 1/4 inch, when two or more like colors appear adjacent to each other.

(4) Leave a space of 3/4 to 1 inch between stripes representing first two digits and last two digits of steel designation.

NOTE

- Steel identification is shown in table 4- 10.
- Steels that require marking, but cannot be identified and marked, should not be used for repair of aircraft
- Color marking does not apply to corrosion-resistant steels, low carbon alloy steel, or tool steels.

4-5. Titanium and Titanium Alloys . Titanium is a light, strong, corrosion-resistant, ductile metal, situated between the aluminum alloys and corrosion-resistant steels insofar as modulus, density, and strength at intermediate temperatures are concerned. At normal temperatures, commercially pure titanium and titanium alloys have excellent corrosion resistance to sea water and marine atmospheres. Titanium and titanium alloys are used chiefly for parts which require good corrosion resistance, moderate strength, light weight, and oxidation resistance at temperatures up to 1200°F (6490°C). Machinability of titanium and its alloys is poor. If titanium is not available for a repair, substitute material should be 4130, 4140, 4340, or 8630 steel of same gauge.

NOTE

Due to its cost, titanium is used only where outstanding advantages will be realized.

a. *Forming*. Commercially pure titanium is formed at temperatures from 400 to 600°F (204 to 316°C), where large deformations are necessary.

(1) Form commercially pure titanium by hydropress, stretch press, brake roll forming, drop hammer, and other similar operations. It is more difficult to form than annealed corrosion-resistant steel.

NOTE

- The alloy sheet can be formed to limited extent at room temperature
- Severe deformation occurs at elevated temperatures up to 1500°F (816°C).

(2) Form in annealed condition if strength of finished part is acceptable without subsequent heat treatment.

NOTE

Quenching introduces serious distortion.

(3) Stress relieving is required after forming.

(4) Use monel rivets or standard close tolerance steel fasteners for installation of titanium parts.

b. *Inspection*. Titanium is nonmagnetic and the penetrant type inspection will be required.

c. *Identification*. Titanium and titanium alloys are identified by class in table 4-11. Titanium alloys can be identified by composition designation. Titanium alloy, 6AL-4V, has the following nominal chemical composition of six percent aluminum, four percent vanadium, and the balance is titanium.

d. *Marking*. Mark titanium alloys with a suitable marking fluid, such as ink, Federal Specification TT-I-558.

(1) *Sheet and strip*. Use characters not less than 3/8 inch in height, in rows of recurring symbols at intervals not greater than 3 feet throughout the length, giving the following information:

- Manufacturer's name or trademark.
- Composition or commercial alloy number.

Downloaded from http://www.everyspec.com

- Heat number
- MIL-T-9046.
- Thickness in inches

(2) Bars, forgings, and forging stock Mark in rows of recurring symbols at intervals not greater than 2 feet throughout its length, giving the following information.

- MIL-T-9047
- Class number (as applicable)
- Manufacturer's name or trademark
- Heat number
- Commercial designation.

Table 4-9. Cross Reference of Old and New Color Code

First digits, steel No.	Old color (broad stripe)	New color
10	Red	Blue and Black
13	Red and Yellow	Blue and Olive Drab
23	Yellow	Green and Olive Drab
25	Yellow and Green	Green and Orange
31	Green	Olive Drab and Blue
40	Green and White	Yellow and Black
41	Black and White	Yellow and Blue
43	Blue and White	Yellow and Olive Drab
46	Red and Black	Yellow and Red
61	White	Red and Blue
86	Black and Yellow	White and Red
87	Black and Green	White and Maroon

Last digits, steel No.	Old color (narrow stripe)	New color
00	Red and Black	Black and Black
10	Red	Blue and Black
12	Red and Green	Blue and Green
15	Red and White	Blue and Orange
20	Yellow	Green and Black
25	Yellow and White	Green and Orange
30	Black	Olive Drab and Black
35	Black and White	Olive Drab and Orange
40	Green	Yellow and Black
45	Green and White	Yellow and Orange
50	Blue	Orange and Black
55	Blue and Brown	Orange and Orange
60	Brown	Red and Black
65	Brown and White	Red and Orange
95	Olive Drab	Gray and Orange

Downloaded from http://www.everyspec.com

Table 4-10. Identification of Steel

Commercial designation	Current specification	Condition available
	Sheet Plate and Strip	
Low Carbon	QQ-S-698	Hot-Rolled or Cold-Rolled See Specification for Temper and Finish
Low Carbon (High Strength)	MIL-S-7809	Hot-Rolled, Cold-Rolled, As Rolled, or Annealed
1020	MIL-S-7952	Cold-Rolled and Annealed
1025	MIL-S-7952	Same as 1020
1095	MIL-S-7947	A (Annealed) H (Hard Temper) (C47 to C52)
4130	MIL-S-18729	A (Annealed) MA (Modified Annealed) N (Normalized)
6150	MIL-S-18731	(Annealed)
8630	MIL-S-18728	MA (Modified Annealed) N (Normalized)
8735	MIL-S-1 8733	A (Annealed) N (Normalized)
18-8 3-1 (High Ductility)	MIL-S-5059	Annealed 1/4-Hard 1/2-Hard 3/4-Hard Hard
18-8 302 (General Use)	MIL-S-5059	Annealed 1/4-Hard
304 (Low Carbon)	MIL-S-4043	Annealed and Pickled Only
18-8 316 (Corrosion-Resistant)	MIL-S-5059	Annealed 1/4-Hard

Downloaded from http://www.everyspec.com

Table 4-10. Identification of Steel - CONT

Commercial designation	Current specification	Condition available
	Sheet Plate and Strip - continued	
Comp Ti, Cb, or Cb-Ta	MIL-S-6721	Sheet Solution Heat-Treated, Pickled, and Cold-Rolled (No. 2 Finish) Strip-Cold-Rolled, Solution Heat-Treated, and Pickled (No. 1 Strip Finish) Plate-Hot-Rolled, Solution Heat-Treated, and Pickled

Commercial designation	Current Specification	Physical condition	Surface condition
		Bars and Rods	
Carbon Steels (General Purpose) (Specify Type Desired)	QQ-S-1630, OQ-S-631, QQ-S-634, and QQ-S-637	Hot-Rolled and Cold Finish (Specify Condition and Finish)	
1095	MIL-S-8559	A (As Forged) B (As Rolled) C (Spheroidized)	(1) Black as Forged or Rolled (2) Pickled or Blast Cleaned (3) Rough Turned (4) Cold Finish (5) Surface Ground
		Furnished in C-4 Condition 1-inch Diameter of Thickness and Under, and C-2 Condition Over 1-inch Diameter or Thickness Unless Otherwise Specifed	

Downloaded from http://www.everyspec.com

Table 4-10. Identification of Steel--CONT

Commercial designation	Current Specification	Physical condition	Surface condition
		Bars and Rods - continued	
4037	AMS6300	A (As Forged) B (As Rolled) C (Annealed) D (Normalized) E (Normalized and Tempered) F (Hardened and Tempered) G (Drawn and Normalized) H (Normalized and Spheroidize Annealed) Furnished in C-4 Condition 1-1/2 inch Diameter or Thickness and Under, and C-2 Condition Over 1-1/2 inch Diameter or Thickness Unless Otherwise Specified	Same as 1095
4130	MIL-S-6758	A (As Forged) B (As Rolled) C (Annealed) D (Normalized) E (Normalized and Tempered) F (Hardened and Tempered)	Same as 1095
4140	MIL-S-5626	Same as 4130	Same as 1095
4340 or E4340	MIL-S-5000	Same as 4130	Same as 1095
6150	MIL-S-8503	Same as 4130 (A through E)	Same as 1095
8620	MIL-S-8690	A (As Forged) B (As Rolled) C (Annealed) D (Normalized) E (Normalized and Tempered) Furnished in C-4 Condition 1-1/2 inch Diameter or Thickness and Under, and C-2 Condition Over 1-1/2 inch Diameter or Thickness Unless Otherwise Specified	(1) Black as Forged or Rolled (2) Pickled or Blast Cleaned (3) Rough Turned (4) Cold Finish

Downloaded from http://www.everyspec.com

Table 4-10. Identification of Steel- CONT

Commercial designation	Current Specification	Physical condition	Surface condition
		Bars and Rods - continued	
8630	MIL-S-6050	Same as 4130	Same as 1095
8735	MIL-S-6098	Same as 4130	Same as 1095
8740	MIL-S-6049	Same as 4130	Same as 1095
18-8	MIL-S-7720 Comp G	A (Annealed) B (Annealed and Cold Finished) C (Hot-Rolled or Forged Only)	A (Scale not Removed) (Not Finish) B (Pickled or Blast Cleaned) C (Cold-Drawn) D (Cold-Rolled) E (Turned) (Round Only) F (Centerless Ground) (Round Only) G (Polished) (Round Only)
304	QQ-S763	A (Annealed) B (Cold Finish) (High Tensile)	A (Scale not Removed) (Hot Finish) (Pickled or Blast Clean and Pickled Rough Turned) (Rough Bars Only) B (Cold-Drawn or Cold-Rolled) Centerless Ground or Smooth Turned and Polished) (Round Bars Only)

Downloaded from http://www.everyspec.com

Table 4-10. Identification of Steel- CONT

Commercial designation	Current Specification	Physical condition	Surface condition
		Bars and Rods - continued	
321	QQ-S-763	A (Annealed)	A (Same as 304)
410	QQ-S-763	A (Annealed)	A (Same as 304)
430	QQ-S-763	A (Annealed)	A (Same as 304)
16CR-2NI 431 (Special Quality)	MIL-S-18732	Type A-Annealed Type HT 175 (175,000 PSI) Type HT 115 (115,000 PSI)	Descaled

Commercial designation	Current Specification	Type	Shape	Conditions
		Tubing		
1025	MIL-T-5066	I. Welded II. Seamless	Round and Other Shapes	Normalized, Cold-drawn or Stress Relieved
4130	MIL-T-6736	Welded	I. Round II. Rectangular and Square III. Streamline IV Oval	A(Annealed) N (Normalized) HT-125 (125,000 PSI Minimum) HT-150 (150,000 PSI Minimum) HT-180 (180,000 PSI Minimum)
4130	MIL-T-6736	Seamless	Same as 4130	A (Annealed) N (Normalized) HT-1 50 HT-125 HT-180

Downloaded from http://www.everyspec.com

Table 4-10. Identification of Steel- CONT

Commercial designation	Current Specification	Type	Shape	Conditions
		Tubing - continued		
4135	MIL-T-6735	Seamless	Same as 4130 N (Normalized) HT-125 HT-150 HT-180 HT-200	A (Annealed)
8630	MIL-T-6734	Seamless	Same as 4130 N (Normalized) HT-125 HT-150 HT-180	A (Annealed)
8630	MIL-T-6732	Seamless	Same as 4130 N (Normalized) HT-125 HT-150 HT-180	A (Annealed)
8735	MIL-T-6733	Seamless	I. Round II. Rectangular and Square III. Streamline IV. Oval	A (Annealed) N (Normalized) HT-125 (125,000 PSI Minimum) HT-150 (150,000 PSI Minimum) HT-180 (180,000 PSI Minimum)
304	MIL-T-5695	Seamless or Welded	As Required Drawn 1/2-Hard Cold-Drawn	1/4-Hard Cold-
304	MIL-T-8506	Seamless or Welded	As Required	Annealed Only
304 (Hydraulic)	MIL-T-6845	Seamless or Welded	Round	1/8-Hard
18-8 (Hydraulic)	MIL-T-8504	Seamless or Welded	Round	Annealed Only

Downloaded from http://www.everyspec.com

Table 4-10. Identification of Steel- CONT

Commercial designation	Current Specification	Type	Shape	Conditions
		Tubing - continued		
Inconel	MIL-T-7840 Welded	Seamless or Welded	Round	Cold-Drawn
321 18-8	MIL-T-6737	Welded	As Required	Annealed Only
G321 18-8	MIL-T-8606	Seamless or Welded Drawn	As Required	Annealed Only
X347	MIL-T-6737	Welded	As Required	Annealed Only
G347 18-8	MIL-T-8606	Seamless or Welded Drawn	As Required	Annealed Only

Commercial designation	Current Specification	Type	Physical Condition	Surface Conditions
		Wire		
Hard-Drawn	4-7-59	A (Spring) B (Zinc-Coated)		Class A- Uncoated Class B- Zinc-Coated
General Purpose	QQ-W-412 QQ-W-428	I. II III.	A (Spheroidize Annealed at Finish Size) B (Spheroidize Annealed and Lightly Drawn)	I. Oil Tempered Spring Wire II. Hard-Drawn III. Soft
		Bars and Rods		
302 and 316	QQ-W-423		Spring Temper Annealed	Corrosion-Resistant

Downloaded from http://www.everyspec.com

Table 4-10. Identification of Steel - CONT

Commercial designation	Current Specification	Type	Physical Condition	Surface Conditions
		Bars and Rods - continued		
410 and 420	QQ-W-423		Heat-Treated Annealed	Corrosion-Resistant
	QQ-W-461	I. Light II. Medium III. Heavy	Zinc-Coated Annealed	Hard
Music Wire	QQ-W-470		Cold-Drawn	
6150	MIL-S-8696	A (Annealed) B (Spring Temper)	Corrosion-Resistant	1. Cold Finished 2. Ground

Table 4-11. Titanium and Titanium Alloys

Percent alloy	Class	Condition	Tensile strength (psi-min)
	Sheet and Strip - Military Specification MIL-T-9046		
8Mn	1	Hot-Rolled, Annealed and Descaled	120,000
6A1-4V	2		130,000
5A1-2 5 Sn	3		120,000
2Fe-2Cr-2Mo	4		120,000
	Bars, Forgings and Forging Stock - Military Specification MIL-T-9047		
Unalloyed	1	Hot-Worked, Annealed, and Descaled	80,000
5A1-2-1/2 Sn	2		115,000
3A1-5Cr	3		140,000
2Fe-2Cr-2Mo	4		130,000
6A1-4V	5		130,000
4A1-4Mn	6		130,000
5A1-1 1/2 Fe-1-1/2Cr-1-1/2Mo	7		140,000 145,000

Al - Aluminum	Mn - Manganese	V - Vanadium
Cr - Chromium	Mo - Molybdenum	
Fe - Iron (Ferrum)	Sn - Tin (Stannum)	

Downloaded from http://www.everyspec.com

Downloaded from http://www.everyspec.com

CHAPTER 5

PHENOLIC AND PLASTIC MATERIALS

5-1. General. Identification, usage, and storage of phenolic compositions and plastic materials are explained in the following paragraphs.

5-2. Phenolic Compositions. Identification, usage, and storage is as follows.

a. Identification. The manufacturer will mark each full size sheet on the right-hand corner, on both sides, with name and trademark and type FBG (General purpose grade). Phenolic sheets, MIL-P-15035, are actually cotton-fabric-base, phenolic-resin laminated thermosetting sheets.

b. Usage. Phenolic sheet is used to make chafing strips, dividers, spacers, fillers, fairleads, and washers. Unless otherwise specified, phenolic compositions should be attached with rivets.

c. Storage. Store phenolic composition sheets in a cool, dry area. Wrap or interweave sheets with 25-pound wrapping paper, Federal Specification UU-P- 268.

5-3. Plastic Materials. Identification, types, and storage of plastic materials are explained in the following paragraphs.

a. Identification. Plastic materials, including grades and intended uses, are listed in Table 5-1. Some plastic materials may be identified by information marked on protective covering as follows:

- Specification number and type.
- Nominal thickness
- Manufacturer's code designation

b. Types. Some of the various types of plastic materials which are used in Army aircraft are explained in the following paragraphs.

(1) Thermosetting. Thermosetting plastic, MIL-P-8257, can be heated and molded only once. When viewed from the edge, this material has a bluish or blue-green tint.

(2) Craze-resistant acrylic. Craze-resistant acrylic plastic, MIL-P-8184, is used on newer aircraft or in parts fabricated since 1953. When viewed from the edge, this material has a slight yellowish tint.

(3) Laminated plastics. Laminated plastics, MIL-P-25374, is composed of two layers of craze-resistant acrylic plastic, MIL-P-8184, bonded together with a soft plastic inner layer.

NOTE

When tapped lightly with a small blunt instrument, plastic resounds with a dull or soft sound while plate glass resounds with a metallic sound or ring.

c. Storage. Store plastic materials in a cool, dry area away from solvent and paint fumes, and not exposed to direct rays of the sun.

WARNING

When masking paper adhesive deteriorates, moisten the paper with aliphatic naphtha, Federal Specification TT-N-95 Type II, only. Wash sheets immediately with clear water. Observe all dire pre-cautions while using aliphatic naphtha for cleaning acrylic plastic injury to personnel may otherwise result.

Downloaded from http://www.everyspec.com

CAUTION

- Do not store plastic materials near heating coils, radiators, hot water, or steam pipes. Damage to equipment may otherwise result
- Stack small sheets on larger sheets to prevent unsupported overhanging.

(1) Sheets. Store plastic sheets, with masking paper in place, in bins which are tilted approximately 1-degree from vertical to prevent buckling. When necessary to store sheets horizontally, use extreme care to prevent any dirt or other foreign objects from getting between the sheets. Do not stack sheets over 18 inches high.

(2) Formed section. Store formed sections so they will be amply supported and have no tendency to lose their shape. Avoid vertical nesting. Do not store in any location where the temperature exceeds 120° F (49°C). Protect formed section from scratches by applying a protective coating, Military Specification MIL-C- 6799, at least 0.009 inch thick. A layer of cheesecloth, Federal Specification CCC-C-440, should be embedded in the coating to facilitate removal.

Table 5-1. Identification of Plastic Materials

Commercial designation	Current specification	Form	Grade and Intended use
Plastic Sheet, Laminated, Thermosetting, Electrical Insulating, Paper-Base Phenolic-Resin	L-P-513	Sheets	Type PBG-General Purpose Grade Type PBE-Electrical Grade Type PBE-P-Electrical Grade; Punching Stock-Better Electrical Characteristics Than Obtained With Phenolic-Resin, Cotton-Base, But Sacrifice in Regard to Impact Strength.
Plastic-Material Laminated, Thermo-setting, Electrical Insulating, Sheets Glass-Cloth, Sili-Resin	MIL-P-997	Sheets	Specification Covers Type GSG, Class H Plastic Insulating Material Having Fire and Electrical - Arc Resistance, Heat Resistance, and Very Good Electrical - Resistance and Dielectric Loss Characteristics.
Plastic Sheet, Laminated, Thermosetting, Cotton-Fabric-Base, Phenolic-Resin	MIL-P-15035	Sheets	Type FBM-Mechanical Grade Type FBG-General Purpose Grade Type FBE-Electrical Grade Type FBI-For Fine Machining Applications for Electrical Insulating and Mechanical Purposes, When a Greater Mechanical Strength is Required Than Can Be Obtained with Phenolic-Resin Paper-Base Laminated, But With Some Sacrifices in Electrical Characteristics.

Downloaded from http://www.everyspec.com

Table 5-1. Identification of Plastic Materials - CONT

Commercial designation	Current specification	Form	Grade and Intended use
Plastic Sheet, Laminated, Thermosetting, Glass-Cloth, Melamine-Resin	MIL-P-15037	Sheets	Glass-Cloth, Melamine-Resin, General Purpose (Type GMG) Plastic Thermosetting Sheet Material Primarily for Electrical Insulating Purposes
Plastic-Material Laminated, Thermosetting, Sheets, Nylon-Fabric-Base, Phenolic-Resin	MIL-P-15047	Sheets	For Use In Electronic Applications Requiring Moisture Resistance, But Not Heat, Flame, and Arc Resistance. Severe Decrease in Flexural Strength Occurs at Temperatures Above 76°C (167°F).
Plastic-Material Laminated, Thermosetting (For Designation Plates)	L-P-387	Sheets	Type GCP-F-Flexible, Stampable Type GCP-Heat-Resistant Type NDP-For Engraving Type HSP-Heat-Resistant, for Surface Marking
Plastic Sheet, Thermosetting, Transparent	MIL-P-8257	Sheets	Finish A-Glazing Applications in Noncombat, Nonpressurized Aircraft, and as a Surface Sheet for Transparent Laminated Assemblies Where Crazing Resistance is Important and Limited Formability Can Be Tolerated Finish B-Primary for Use in Ribs or Reinforcing Strips for Parts Fabricated on Finish A Material.
Plastic, Self-Sealing Tank Backing Material, Temperature and Water-Resistant	MIL-P-8045	Sheets	Class A-For Use With Self-Sealing Fuel Tanks Class B-For Use With Self-Sealing Oil Tanks. Type I -Intermittently Supported. Type II -Continuously Supported Type III - Intermittently Supported and Fastened to the Supporting Stringers
Plastic-Material Laminated, Thermosetting Sheets, Cotton-Fabric-Base, Post-Forming	L-P-511	Sheets	The Laminated Plastic Sheet is Intended for Forming into Compounds Shapes for Mechanical Applications on Aircraft Not Intended for Electrical Insulation Applications.

Downloaded from http://www.everyspec.com

Table 5-1. Identification of Plastic Materials - CONT

Commercial designation	Current specification	Form	Grade and Intended use
Cellulose Acetate Plastic Sheets	L-P-504	Sheets	Type I-General Purpose Type II - Superior Mechanical and Optical Type III-Superior Glazing
Plastic Sheet, Vinyl-Copolymer, Thin	MIL-P-6264	Sheets	The Plastic Film Covered by This Specification is Intended for Use as a Backing for Sound Proofing Blankets on Aircraft.
Plastic, Sheet Acrylic, Heat-Resistant	MIL-P-5425	Sheets	Finish A-For Transparent Areas on Aircraft Where a Material With Good Optical, Formability, Outdoor Weathering, and Heat-Resistance Properties is Required. Finish B-For Use in Reinforcing Ribs, Moldings, etc. of Transparent Acrylic Assemblies.
Plastic Sheet, Acrylic, Modified	MIL-P-8184	Sheets	Finish A-Material for Transparent Areas on Aircraft, Has Good Optical, Formability, Crazing Resistance, Outdoor Weathering and Heat Resistance Properties. Finish B-Material is Intended for Use in Reinforcing Ribs, Molding, etc. of Transparent Acrylic Assemblies.
Molding Plastic, Cellulose Acetate	L-P-397		
Plastic Rods and Tubes, Thermosetting, Laminated	MIL-P-79	R-Rods Molded TR-Tubes Rolled TM-Tubes Molded	Type PBE-General Purpose Material Fairly Good Mechanical and Electrical Properties. Under Adverse Conditions of Temperature and Humidity PBE Possess High Dielectric Strength and Relatively Low Dielectric Losses. Type PBG-General Purpose Material Combining Fairly Good Mechanical and Electrical Properties. Type PMB-Use for Structural and Electrical Applications Where No Moisture is Present, Applications Where Electrical Properties Are Subbordinate to the Required Mechanical Properties.

Downloaded from http://www.everyspec.com

Table 5-1. Identification of Plastic Materials - CONT

Commercial designation	Current specification	Form	Grade and Intended use
Plastic Rods and Tubes, Thermosetting, Laminated - continued			Special Precautions are Taped or Machines Parallel to Lamination. Type FBE-Better Electrical Properties Than BFG, Some Sacrifice in Toughness Suitable for Fine Machining Operations Type FBG-Fairly Good Dielectric Properties, Medium Dielectric Loss, Good Degree of Mechanical Strength, Particularly Toughness Type FBM-For Structural Not Electrical Applications. For Use Where Electrical Properties Have Been Greatly Subordinated to the Required Mechanical Properties. TYPE GMG-Mechanical Applications Requiring Good Resistance to Heat, Flame, and Arching Conditions.
Plastic Sheet, Acrylic Base, Antielectro-static,Trans-parent, (For Indicating-Instruments Windows)	MIL-P-80	Sheets or Win-dows Cut From Sheets	Glass - Heat-Resistant.

Downloaded from http://www.everyspec.com

Downloaded from http://www.everyspec.com

CHAPTER 6
ADHESIVES, SEALANT, AND CEMENTS

6-1. General. Precautionary measures, preparation of surfaces, mixing, and curing procedures for various adhesives, sealants, and cements are explained below.

a. *Precautionary Measures*. Precautionary measures to be complied with during handling and storage of cements and sealants are listed below.

(1) Toxic vapors. Many of the materials listed may be flammable or may produce toxic vapors. When using any material designated as flammable, all sources of ignition must be at least 50 feet away from the location of the work. Toxic vapors are defined as vapors produced by the evaporation of a solvent. Prolonged exposure to these vapors may cause discomfort or be harmful to life.

(2) Confined spaces. When using toxic or flammable materials in confined places such as fuel cells, fuselage, or wing sections, adequate local exhaust ventilation shall be used to reduce vapors below the maximum allowable concentration. In emergencies, or when operations of short duration make the provision of local exhaust ventilation impracticable, personal protective equipment such as air supply respirators, oxygen supply respirators, or approved chemical cartridge respirators shall be used.

(3) Storage area. The storage area shall be cool and dry, preferably dark, and fireproof. Fire extinguishers of the foam or carbon dioxide type shall be provided.

(4) Issue. Materials shall be issued in order of date of manufacture shown on the labels. Materials bearing the oldest date shall be issued first.

b. *Preparation of Surface*. The primary requirement for proper installation of cements and sealants is thoroughly cleaned areas to which the material is to be applied. The surfaces must be free of contaminating substances, such as dirt, dust, and grease, before applying cement or sealant. This will require preliminary cleaning, buffing (in some cases), and final cleaning.

WARNING

Use solvents in a well-ventilated area. Keep away from open flames. Avoid prolonged contact with skin. Fire, injury, or death may occur.

(1) Cleaning agent. Clean metal prior to final cleaning using applicable cleaning agent from the following: methyl isobutyl ketone, ASTM D1153; methyl ethyl ketone, Federal Specification TT-M-261; aromatic naphtha, Federal Specification TT-N-97; ethyl acetate, Federal Specification TT-E-751; or dry cleaning solvent, Federal Specification P-D-680.

(2) Drying. Do not allow cleaning agent to evaporate before wiping dry with cloth, or it will redeposit soils on surface. Never dip cloth used for cleaning into a fresh supply of cleaning fluid after it has once touched surface to be cleaned.

(3) Alternate cleaning agents. Use technical trichloroethylene, Federal Specification O-T-634, or tetrachloroethylene, Federal Specification O-T-236, as an alternate preliminary cleaning method, provided facilities are available and size of parts to be sealed or bonded permits. Do not use if other reasons prohibit use of these cleaning methods.

(4) Final cleaning. Final cleaning is very important as soils from hands and hair, or from any other source, will prevent adhesion. Use cleaner and brightener compound, MIL-C-5410, Type II, diluted with an equal amount of distilled water. Wash area where cement or sealant is to be applied with a clean piece of cheesecloth, Federal Specification DDD-C-301, wet with cleaning solution. Rinse with a clean piece of cheesecloth wet with clean water and wipe with a clean, dry cheesecloth. Dry area with warm, dry air.

c. *Mixing.* Cements and sealants consist of two or more ingredients properly proportioned and compounded to obtain the best results. Some materials are ready for use as packaged while others will require mixing before application.

Downloaded from http://www.everyspec.com

(1) One-part materials. This type of material is compounded by the manufacturer and ready for application as packaged. However, the consistency of some materials may be altered for the purpose of satisfying a particular method of application, when so stated herein or in the manufacturer's instruction. When thinning is desired, the proper thinner must be used

(2) Two-part materials. This type of material requires separate packaging in order to prevent cure prior to application. These parts are identified as base compound and accelerator.

(a) Add accelerator. Prepare material for use by mixing required amount of accelerator with base compound.

(*b) Mix immediately*. Immediately after adding accelerator, thoroughly mix by stirring or folding, depending on consistency of material. Apply immediately to prevent curing prior to application.

(3) Formula for mixing. Instructions for mixing should be furnished with glue. Glue will be in two containers, one of which will contain resin proper in liquid form, the other the catalyst in either liquid or powder form. In the absence of manufacturer's instructions for mixing factory weighed portions of glue, do not use glue. The effect of the amount of catalyst on the joint is too critical to attempt to establish proper proportions by trial batches. When glue does not mix to consistency suitable for spreading, it should be discarded. Normally, no water or other solvent should be added.

(4) Procedure. Mix entire amount (1/2 pint) with weighed amount of catalyst (hardener) furnished in the capsule. Avoid air entrapment and incomplete mixing. Add no material in an effort to thin glue after original mixing. Discard when not suitable for spreading.

d. Curing. Cements and sealants are cured by chemical reaction (accelerator) or solvent evaporation. The cure can be hastened by use of heat or warm filtered air, not to exceed 110°F (43.3°C), applied gradually increase the temperature as the material begins to set until the maximum 110°F (43.3°C) is reached. Hold at this temperature until the material becomes tack-free and chip-free.

6-2. Adhesives and Cements. Cement types and uses are explained in the following paragraphs.

a. Cement Types. There are two distinctive types of cement, the solvent release type and the vulcanizing type.

(1) Solvent release. The general characteristics of solvent release cements are described in the following paragraphs.

(*a) Bond strength*. Solvent release, or air drying, does not cure. The bond which is formed is due to the strength of the materials after the solvent has evaporated and left the cement dried to the object.

(b) Tacky-dry test. The term tacky-dry is used in the majority of application instructions. This should be interpreted as allowing the solvent to evaporate to the point where there is slight adherence to the film of the cement. To determine the state of tacky-dry, press a knuckle on the film. There should be a slight adherence to the knuckle, but the film should not stick.

(c) Variable drying time. Drying time cannot be definitely stated because the time element depends upon characteristics of the cement, the thickness of the coat, method of application, and number of coats.

(d) Full adhesion. After cement has been applied and becomes tacky-dry, press surfaces firmly together and roll down. The cement does not reach its full adhesive and cohesive strength until the solvent has escaped.

(2) Vulcanizing. Characteristics of vulcanizing cements are described in the following paragraphs.

(a) Action. Vulcanizing is a process which brings about the bonding of structural elastomers in this process, a chemical action takes place on the mating surfaces of the elastomers.

WARNING

Acrylic monomer and polymer base adhesive MIL-A-8576 contains a volatile liquid which may prove toxic if vapor is inhaled over extended periods. Use only with adequate ventilation. When accidentally spilled on hands or skin, remove immediately by dissolving with ethyl alcohol, Federal Specifications O-E-760, followed by washing with soap and water. Over-exposure symptoms are drowsiness, dizziness, and nausea. Treat by wrapping patient in blankets, provide plenty of fresh air, and obtain medical assistance.

Downloaded from http://www.everyspec.com

(b) Use. Vulcanizing is used where the strongest possible adhesion is needed.

(c) Types. Two types of vulcanizing cements are air vulcanizing, which cures by exposure to normal room temperature, and heat vulcanizing, which is used where a combination of heat and pressure are mechanically applied.

(d) Room temperature vulcanizing (RTV) silicone sealants Many RTV silicone compounds give off acetic acid during their cure cycle. Some corrosion problems can potentially occur when curing by products come in contact with sensitive metals. This is of particular concern when RTV silicones are used in and around delicate electronic components. Therefore, in applications near electronic equipment, RTV silicone compounds which conform to MIL-A-46146 (Adhesive- Sealants, Silicone, RTV, Noncorrosive) should be used. Also, it would be preferable to use RTV silicones per MIL-A-46146 for other aircraft applications whenever possible, provided that the properties of the cured RTV silicone are adequate for the specific application. This cannot always be done as in applications which require very high temperature and/or fuel/oil resistance. RTV silicones to be used in aircraft are determined by the location of the application, the surrounding materials, and the final required properties. Substitution of specified materials must not be made without approval from AVSCOM Engineering.

WARNING

Acrylic monomer and polymer base adhesive MIL-A-8576 contains a volatile liquid which may prove toxic If vapor is inhaled over extended periods. Use only with adequate ventilation. When accidentally spilled on hands or skin, remove immediately by dissolving with ethyl alcohol, Federal Specifications O-E-760, followed by washing with soap and water. Over-exposure symptoms are drowsiness, dizziness, and nausea. Treat by wrapping patient in blankets, provide plenty of fresh air, and obtain medical assistance.

b. Acrylic Monomer Base Adhesive. MIL-A- 8576. Type I. Solvent Type This cement is used in patching acrylic plastics and in cementing acrylic plastics to other type plastics. It cures by evaporation of solvent, but a catalyst, furnished as a separate ingredient, is required to be added to the packaged cement. This cement is nonflammable and has a thick, syrup-like consistency. It is clear or amber in color and is resistant to oil and water. It is mildly toxic, but used in such small quantities this is not too important. Do not attempt to thin with dichloromethane (methylene chloride) when the material has become too thick while in storage, as the chemical composition may have changed.

(1) Shelf life. Before adding the catalyst, and provided the container is kept tightly closed, the cement has a shelf life of at least 1 year. After the catalyst is added, and when the container is kept tightly closed, shelf lives at the temperatures given in table 6-1 will apply.

Table 6-1. Shelf Life

Temperature	Shelf life
122°F (50°C)	20 hours
104°F (40°C)	3-1/2 days
77°F (25°C)	45 days
41°F (5°C)	5 months

(2) Thinning. In use, the solvent will evaporate, causing the cement to thicken. In this case, dichloromethane (methylene chloride), MIL-D-6998, may be added to keep the proportion of monomer to solvent correct. The specific gravity of the cement provides a quick method of checking the relative proportions of the two components. Table 6-2 gives the correct specific gravity ranges for given temperatures.

Table 6-2. Specific Gravity Ranges

Specific Temperature	gravity range
68°F (20°C)	1.17- 1.21
77°F (25°C)	1.16- 1.20
86°F (30°C)	1.15- 1.19
95°F (35°C)	1.14- 1.18
104°F (40°C)	1.13 - 1.17

Downloaded from http://www.everyspec.com

(*3) Checking*. The specific gravity should be checked with a high grade storage battery hydrometer at least every 4 hours when the cement is used continuously and more often when the 4-hour check shows an excessive change of composition. When cement is not used continuously, test specific gravity before each use.

WARNING

Dichloromethane (methylene chloride) is toxic when its vapors are inhaled over a period of time. Adequate ventilation shall be provided for personnel working with this cement, taking into consideration that dichloromethane (methylene chloride) vapor is heavier than air. Injury to personnel may occur.

(4) Specific gravity adjustment. When, at time of checking, specific gravity of cement is found to be too low, it should be adjusted by adding dichloromethane (methylene chloride), MIL-D-6998 to bring its specific gravity to the maximum end of the specified range. This adjustment requires the addition of dichloromethane (methylene chloride) to the extent of approximately 2.5 percent by volume of cement per 0.01 unit of required correction of specific gravity. The cement should be thoroughly stirred and the specific gravity should be rechecked.

CAUTION

Do not mix catalyst directly with promotor or accelerator material since a rapid decomposition reaction will result.

(5) Mixing. Mix catalyst as soon as opened The cement can be used any time up to 6 hours. Apply only by brush or spatula.

(6) Alternative. In emergencies when acrylic monomer base cement, MIL-A-8576, is not available, dichloromethane (methylene chloride) may be used. It is a more active solvent than cement and shorter soak periods should be used it is also more conducive to blushing or whitening of a joint.

(7) Uses. The type of acrylic plastic being bonded determines the type of adhesive to be used. Acrylic monomer base adhesive, MIL-A-8576, Type I is used when bonding acrylic plastic, MIL-P-886, and heat resistant acrylic plastic, MIL-P-5425. Under no circumstances should it be used when bonding material conforming to MIL-P-8184.

WARNING

This material contains a volatile liquid which may prove toxic if vapor is inhaled over extended periods. Use only with adequate ventilation. When accidentally spilled on hands or skin, remove immediately by dissolving with ethyl alcohol, Federal Specifications O-E-760, followed by washing with soap and water. Over-exposure symptoms are drowsiness, dizziness, and nausea. Treat by wrapping patient in blankets, provide plenty of fresh air, and obtain medical assistance.

CAUTION

Do not mix catalyst directly with promotor or accelerator material since a rapid decomposition reaction will result.

c. Acrylic Monomer and Polymer Base Adhesive. MIL-A-8576. Type II. Non-Solvent. This adhesive is used in bonding acrylic plastics conforming to MIL-P- 8184. The adhesive cures by evaporation of solvent, but a catalyst, furnished as a separate ingredient, is required to be added. This adhesive has a clear, thick, syrup-like consistency that is resistant to oil and water. The shelf life of this adhesive is shown in table 6-3. Acrylic monomer and polymer base adhesive conforming to MIL-A-8576, Type II is used when bonding craze resistant acrylic plastics conforming to MIL-P-8184.

d. Chemigum Coating Cement. Goodyear Chemigum coating cement (Part No. 5071C) is a Buna-N rubber coating used only for coating on Goodyear nylon pliocel fuel cells. In an emergency, adhesive MIL-A-9117 may be substituted.

Downloaded from http://www.everyspec.com

Table 6-3. Shelf Life of Adhesive

Storage temperature	With catalyst added	Without catalyst	With catalyst and promoter added
45°F (7°C)		6 months	When cement has been mixed with promoter and catalyst, it has practically no useful life at high temperatures and only approximately 30 minutes life at 73°F (23°C)
73°F (23°C)	3 days	4 months	
104°F (40°C)	12 hours	2 months	
122°F (50°C)	2 hours	2 weeks	
140°F (60°C)	45 minutes	10 days	

e. *Colored Cement*. Colored cement is used for coating rubber parts for marking purposes. Brush application of this cement is recommended, however, it can be sprayed or dipped on. Before application, clean the receiving surface with aromatic naphtha, Federal Specification TT-N-97. After application, thorough evaporation of the solvent in the cement is necessary for complete fuel resistance.

f. *Deicer Shoe Electrical Conducting Neoprene Surface Coat Cement* This neoprene rubber coating is used for the resurfacing of deicer shoes when they become worn, scuffed, or bruised. It cures by solvent evaporation and is resistant to ozone and sunlight. Best results are obtained by spraying, but it may be brush applied.

g. *General Purpose Synthetic Rubber Base Cement MIL-Spec MMM-A-1617* This cement can be used successfully in a wide variety of applications, such as bonding vinyl to vinyl, rubber to rubber, rubber to metal, rubber to fabrics, leather to leather, vinylite, wood, and metal surfaces it is suitable for use up to 158°F (70°C) and has good water and oil resistance and fair fuel resistance. It may be applied with a spatula or be brushed or sprayed when thinned with methylethylketone, Federal Specification TT-M-261.

h. *Non-Hardening Distic Brand Cement* This cement is used specifically for cementing sanding disks due to its nonhardening characteristics and the relative ease it provides in removing the sanding disk for replacement.

i. *Natural Rubber Adhesive, MIL-Spec MMM-A- 139, Class 3* This is a two-part, air drying, natural rubber adhesive and is used for adhering natural or synthetic rubber and in particular for the manufacture and repair of articles fabricated from natural rubber coated fabrics. These adhesives shall not be used for bonding nylon. It is used for permanent repairs of pneumatic life rafts and life jackets.

j. *Neoprene Base Synthetic Rubber Cement* This two-part, self-curing, synthetic rubber cement is used in the bonding of propeller anti-icer feed shoes. It can also be used for bonding neoprene, leathers, and porous materials to themselves where oil and gasoline resistance is required. This cement is resistant to oil, gasoline, and water, is mildly toxic and flammable. Check applicable maintenance manual for correct adhesive The following procedures should be observed:

(1) Mix catalyst furnished with cement as soon as cement is opened.

(2) Apply cement with a brush. Working life of cement is 8 hours.

k. *Deicer Repair Cement*. This two-part, water-resistant, modified gum rubber cement is used for making deicer shoe repairs. It can also be used for making hot patches, cementing rubber to rubber, rubber-coated fabric to rubber, and rubber to metal. The following procedures should be observed:

(1) Mix equal parts of each ingredient just prior to use, mixing only enough for 4-hour use.

(2) Apply by brush after surfaces have been slightly roughened and then cleaned with benzene, ASTM D836, or nonleaded high-test gasoline. Apply one or more coats of mixed cement to each surface. Allow 30 minutes drying time between coats. When final coat is dry, bring surfaces together and pressure cure for 20 minutes at 260°F (126.7°C).

l. *Cement Primer.* This solvent-type resinous solution is used in conjunction with neoprene base synthetic rubber cement for bonding of propeller anti-

Downloaded from http://www.everyspec.com

icer shoes. It can also be used as a primer for bonding iron, steel, chrome-plated and stainless steel, aluminum, anodized or chromated aluminum, cured phenolics, acrylics, glass, wood, and concrete

(1) Roughening. Roughening the surface is sometimes found advantageous, particularly where solvent cleaning has been found ineffective in removing mold release agents or other surface contaminants

(2) Applying. Apply by brush, spray, dip, roller, or flow coating.

(3) Drying. Allow a minimum drying time of 30 minutes before application of cement.

m. Composite Adhesives. Various adhesives and fasteners are used with composite materials. Refer to the applicable maintenance manual for procedures concerning a particular aircraft. Adhesive curing time, application, and shelf life vary with type of adhesive being used.

n. Other Adhesives. Other adhesives, with various catalysts to permit different assembly periods and different curing temperatures, are used extensively in aircraft fabrication. The storage life of these adhesives is very short, and for this reason only small quantities should be carried in stock. These adhesives are equally suitable for attaching wood or laminated plastic.

6-3. Sealants. Sealant characteristics and types are explained below. Sealants are classified as pliable, drying, or catalyst cured sealants.

a. Characteristics of Pliable Sealants. These sealants are referred to as one-part sealants, and are supplied ready for use as packaged. They are solids and change little, if any, during or after application. Solvent is not used in this type; therefore, drying is not necessary, and except for normal aging, they remain virtually the same as when first packaged, neither hardening nor shrinking. The adhesion to glass, metal, and other impervious surfaces is excellent. The adhesion is not complete until 15 to 30 minutes after it is applied.

b. Characteristics of Drying Sealants. Sealants in this group set and cure by evaporation of the solvent. Solvents are used in many of these sealants to provide the desired consistency for application. Once applied, however, the solvent becomes an undesired constituent and must be eliminated to cause hardening of the sealant. Consistency or hardness may change little or much when this type sealant dries, depending on the amount of solvent it contains. The degree of shrinkage is dependent upon the proportion of solvents.

c. Characteristics of Catalyst Cured Sealants. Catalyst cured sealants are transformed from a fluid or semifluid state into a solid mass by chemical reaction or physical change. Air is not required to effect a cure. This type sealant can be placed between faying surfaces. A chemical catalyst, or accelerator, is added and mixed just prior to sealant application. Heat may or may not be employed. Temperature, and sometimes humidity, has a marked affect on life. Temperature greatly influences cure time and heat is sometimes recommended as a means of shortening cure time.

d. Sealing Compound, MIL-S-8784. Sealing compound, MIL-S-8784, is used in the sealing of integral fuel or oil tanks. The sealant forms a low adhesion material, facilitating easy removal of fuel tank access doors and other components. A feature of this sealant is that it will completely cure under fuel, therefore, fuel may be entered into the tank upon completion of component installation. This is a two-part sealant available in two consistencies. Class A consistency sealing compound is applied with a brush. Class B consistency sealing compound is applied with a putty knife. Before applying sealant, ensure that surfaces are clean and free from grease. Class A and Class B are available in either of two consistencies, A-1/2 or A-2, B-1/2 or B-2. The last dash number, -1/2 or -2, indicates the working (application) time at room temperature.

e. Sealing Compound, MIL-S-8802. Sealing compound, MIL-S-8802, is used in the sealing and repairing of integral fuel and oil tanks. It can also be used for sealing pressure cabins, except where sealant would come in contact with synthetic glass. This is a two-part synthetic rubber sealant available in two consistencies. Class A consistency sealing compound is applied with a brush. Class B consistency sealing compound is applied with a putty knife, extrusion, or injection gun. Mixing requires an accelerator, which reduces drying time. High temperatures further accelerate drying time, thus reducing work life of the sealant. Application time at room temperature is given in table 6-4. The first coat must cure to a tough, rubbery consistency before applying the cover coat. Tack-free cure time at room temperature is given in table 6-5. Ensure that area to be sealed is clean and dry before applying sealant.

f. Sealing Compound, MIL-S-7126. This non- hardening sealant is used for sealing synthetic glass. It can be used as a filler for pressure cabin sealing Type I is a synthetic rubber putty. Type III is an extended type of putty consistency. This sealing compound is applied by hand, putty knife, or extrusion gun. Working time is

Downloaded from http://www.everyspec.com

not less than 3 hours after exposure to air within temperature range of 69.8 to 80 6°F (21 to 27°C). However, after 15 to 30 minutes it is difficult to remove.

g. Semi-Solid Synthetic Rubber Sealant, MIL-A-7126, for Hot-Air Ducts This one-part, solvent-dispersed, synthetic rubber compound is used for sealing seams in hot-air ducts to prevent leakage of hot air. This sealant is applied with spatula or extrusion gun, and cures in 8 to 24 hours at temperature of 120°F (48 9°C).

h. Semi-Solid Synthetic Rubber Sealant for Engine Firewalls This one-part, synthetic rubber, high temperature sealant is used for sealing the firewall to prevent seepage of fluids or vapors to hazardous areas. This sealant is applied by use of extrusion gun or spatula, and is resistant to fuel, oil, water, and weather aging.

i. Anaerobic Adhesive MIL-R-46082 This adhesive covers single component compounds and their primers suitable for sealing, locking, and retaining metal parts. The compounds are normally liquid and are converted to insoluble state when confined between closely fitting metal surfaces.

Table 6-4. Application Time (Room Temperature)

Class A sealant Suffix No.	Application time	Class B sealant Suffix No.	Application time
-1/2	1/2 hour	-1/2	1/2 hour
-2	2 hours	-2	2 hours
-4	4 hours	-4	4 hours
-8	8 hours	-8	8 hours
		-12	12 hours

Table 6-5. Cure Time (Room Temperature)

Class A sealant Suffix No.	Cure time	Class B sealant Suffix No.	Cure time
-1/2	10 hours	-1/2	10 hours
-2	24 hours	-2	24 hours
-4	36 hours	-4	30 hours
-8	50 hours	-8	48 hours
		-12	60 hours

Downloaded from http://www.everyspec.com

Downloaded from http://www.everyspec.com

CHAPTER 7

CONSUMABLE MATERIALS

7-1. General. The consumable or expendable supplies In the listing in this chapter are to be used only as indicated in the applicable maintenance manual. Many of these supplies are not compatible with one another. If used wrong or mixed improperly, they could cause a volatile or undesireable reaction. For these reasons, substitution will be made only with the approval of AVSCOM Engineering.

7-2. Consumable Items. Consumable items are those Items which generally fall into one or more of the following categories:

- One-time use
- Lose identity
- Inexpensive
- Disposable

Some consumable items have a limited useful life. This is termed shelf life An explanation of shelf life codes is shown in table 7-1 See table 7-2 for an explanation of the Essentiality Code (EC).

7-3. Consumable Items List. The consumable items list In this chapter is provided in two parts. Part 1 is in part number sequence, while Part 2 is in nomenclature sequence. The column titles found on these listings are described in the following paragraphs.

a. Consumable Items Part 1. The column heads in the part 1 listing, from left to right, are as follows:

- P/N — part number
- FSCM — federal supply code for maintenance
- NOMENCLATURE — self-explanatory
- UM — unit of measure
- EC — essentiality code
- SL — shelf life code
- ADDITIONAL INFO — self-explanatory
- NSN — national stock number

b. Consumable Items Part 2 The column heads in the part 2 listing, from left to right, are as follows:

- NOMENCLATURE — self-explanatory
- P/N — part number
- FSCM — federal supply code for maintenance
- UM — unit of measure
- EC — essentiality code
- SL — shelf life code
- ADDITIONAL INFO — self-explanatory
- NSN — national stock number

Downloaded from http://www.everyspec.com

Table 7-1. Shelf Life Codes

Shelf life	Type I, non-extendable[1]	Type II, expendable[2]
Nondeteriorative	O	0
1 month	A	
2 months	B	
3 months	C	1
4 months	D	
5 months	E	
6 months	F	2
9 months	G	3
12 months	H	4
15 months	J	
18 months	K	5
21 months	L	
24 months	M	6
27 months	N	
30 months	P	
36 months	Q	7
48 months	R	8
60 months	S	9

NOTE

Military essential and medical items with a shelf life of greater than 60 months (5 years) will be assigned a shelf life code "X" as outlined in AR 700-89.

[1] A Type I item Is an item of supply which is determined through an evaluation of technical test data and/or actual experience to be an item with a definite period of shelf life which cannot be extended.

[2] A Type II item is an item of supply having an assigned shelf life time period that may be extended after completion of an inspection, a test, or restorative action.

Downloaded from http://www.everyspec.com

Table 7-2. Essentiality Codes (ESNTL-CD).

This code is a single character code that indicates the degree to which the failure of the component, assembly, subassembly, repair part, etc. affects the ability of the end item or system to perform its intended mission.

Code	Explanation
A	End item is mission essential.
B	End Item Is not mission essential.
1	Failure of this part will render the end item Inoperable.
3	Failure of this part will not render the end item inoperable.
5	Item does not qualify for the assignment of code 1 but is needed for personnel safety.
6	Item does not qualify for the assignment of code 1 but is needed for legal, climatic, or other requirements peculiar to the planned operational environment of the end item.
7	Item does not qualify for the assignment of code 1 but is needed to prevent impairment of, or the temporary reduction of, operational effectiveness of the end item.

Downloaded from http://www.everyspec.com

CONSUMABLE ITEMS PART 1

P/N	FSCM	NOMENCLATURE	UM	EC	SL	ADDITIONAL INFO	NSN
A-A-1043	58536	WOOL, METALLIC -FF-W-1825 TY4 CL4 FORM B, LB	LB	3	0	REV 7161	5350002424406
A-A-1043	58536	WOOL, METALLIC -SIZE 00,1 LB ROLL	LB	3	0	REV 7275	5350002402920
A-A-1044	81348	WOOL,METALLIC -A-A-1044 TY1 CL3 FORM B, LB	LB	3	0	REV 7161	5350011968371
A-A-1044	58536	WOOL, METALLIC -TYPE 2, 1 POUND ROLL	LB	3	0	REV 7345	5350002864851
A-A-1047	58536	PAPER, ABRASIVE -	EA				
A-A-1047	58536	PAPER, ABRA51VE -80 GRIT, 9X11 INCHES, 50 SHEETS PER PG	EA	3	0	REV 7273	5350006199168
A-A-1047	58536	PAPER, ABRASIVE -500 GRIT, 9X11 INCHES, 50 SHEETS PER PG	EA	3	0	REV 7273	5350002247216
A-A-1047	58536	PAPER, ABRASIVE -P-P-121 GRIT 320 EXTRA FINE 9X11 SHEET 50 EACH	EA	3	0	REV 7280	5350002247203
A-A-1048	58536	CLOTH, ABRASIVE -P-C-451 TY1 CL2, 1.5 IN WD ROLL	EA	3	0	REV 7232	5350001619066
A-A-1048	58536	CLOTH, ABRASIVE -240 GRIT, 50 YD ROLL	YD	1	0	REV 6357, 7257	5350001876289
A-A-1048	58356	CLOTH, ABRASIVE -320 GRIT, 50 YD ROLL	YD	3	0	REV 6357, 7257	5350002293092
A-A-1048	58536	CLOTH, ABRASIVE -120 GRIT, 9XII SHEET, 50 EACH PER PACKAGE	EA	3	0	REV 7261	5350001925049
A-A-1048	58536	CLOTH, ABRASIVE -80 GRIT, MED GRIT, 9X11 INCHES, 50 SHEETS PER PG	EA	3	0	REV 7345	5350001925047
A-A-1048	58536	CLOTH, ABRASIVE -100 GRIT, FINE, 1 TYPE,9X11 INCHES, 50 SHEETS PER PG	EA	3	0	REV 7273	5350001619066
A-A-1048	58536	CLOTH, ABRASIVE -150 GRIT, FINE, 1 TYPE, 9X11 INCHES, 50 SHEETS PER PG	EA	3	0	REV 7345	5350001925050
A-A-1048	58536	CLOTH, ABRASIVE -320 GRIT, 50 SHEETS PER PG	EA	3	0	REV 7273	5350002460330
A-A-1048	81348	CLOTH, ABRASIVE -1TY, 1CL, 400 GRIT, 9X11 INCHES, 50 SHEETS PER PG	EA	3	0	REV 7273	

Downloaded from http://www.everyspec.com

CONSUMABLE ITEMS PART 1

P/N	FSCM	NOMENCLATURE	UM	EC	SL	ADDITIONAL INFO	NSN
A-A-1049	58536	CLOTH, ABRASIVE -A-A-1049 91N WIDE AND 11 IN LONG, EMERY CLOTH, 50 SH PER PG	EA	3	0	REV 7349	5350005844653
A-A-1049	58536	CLOTH, ABRASIVE -A-A-1049 9IN WIDE AND 11IN WIDE, 100 GRIT ALUMINUM OXIDE	EA	3	0	REV 7349	5350005844654
A-A-1049	58536	CLOTH, ABRASIVE -EMERY, COURSE, 9XII INCHES, 50 SHEETS PER PG	EA	3	0	REV 7273	5350005844660
A-A-113	58536	TAPE, PRESSURE SENSI -	YD				
A-A-113	58536	TAPE, PRESSURE SENSI- 72 YD ROLL	YD	3	4	REV 7243	7510005519826
A-A-113	58536	TAPE, PRESSURE SENSI-COLOR-YELLOW, 72 YD LONG X 1/2 IN WIDE ROLL	YD	3	4	72 YD LONG X 0 500 IN WI DE RO	7510005507125
A-A-113	58536	TAPE, PRESSURE SENSI-72 YD LONG X 1 IN WIDE ROLL, COLOR CLEAR	YD	3	2	72 YD LONG X 1 IN WIDE RO CONSUMABLE FOR TM 55-1520-210-23-1	7510005519823
A-A-113	58536	TAPE, PRESSURE SENSI-TYPE 1 & CLASS B WHITE, 60 YD LONG X 3/4 IN WIDE ROLL	YD	3	0	60 YD LONG X 0 750 IN WI DE RO	7510008351247
A-A-113	58536	TAPE, PRESSURE SENSI-TY1 AND CLB,0 500 IN WIDE X 72 YD LONG, BLUE COLOR	YD	3	7	REV 7280	7510006343267
A-A-113	58536	TAPE, PRESSURE SENSI-0 500 IN WIDE X 72 YD LONG, COLOR ORANGE	YD	3	4	REV 7280	7510005507129
A-A-113	58536	TAPE, PRESSURE SENSI-0.500 IN WIDE X 72 YD LONG, WHITE COLOR	YD	3	4	REV 7349	7510005507127
A-A-113	58536	TAPE, PRESSURE SENSI-1 IN WIDE X 60 YD LONG ROLL	YD	3	4	REV 7280	7510007207516
A-A-113	58536	TAPE, PRESSURE SENSI-1/2 IN WD X 2592 IN LONG ROLL COLOR YELLOW	YD	3	4	REV 7349	7510005507125
A-A-113	58536	TAPE, PRESSURE SENSI-5 IN WD X 2592 IN ROLL COLOR RED	YD	3	4	REV 7349	7510005507126
A-A-113	58536	TAPE, PRESSURESENSI -A-A-113YELLOW OVERALL	YD	3	4	2592 IN LONG AND 3 IN WI DE	7510005507125
A-A-1189	58536	CALKING LEAD -5 LB BOX	EA	3	0	REV 7349	5330001716545

Downloaded from http://www.everyspec.com

CONSUMABLE ITEMS PART 1

P/N	FSCM	NOMENCLATURE	UM	EC	SL	ADDITIONAL INFO	NSN
A-A-1200	58536	PAPER, ABRASIVE	EA	1	0	REV 6230	5350007218115
A-A-1200	58536	CLOTH, ABRASIVE -SILICON CARBIDE 400 GRIT 9X11 IN SHEET, BUNDLE OF 25	SH	1	0	REV 7349	
A-A-1200	58536	PAPER, ABRASIVE 400 GRIT, 50 SHEETS PER PACKAGE	EA	3	0	REV 7349	5350002247201
A-A-1200	58536	PAPER, ABRASIVE -180 GRIT, 50 SHEETS PER PACKAGE	EA	3	0	REV 7349	5350007218117
A-A-1200	58536	PAPER, ABRASIVE -A-A-1200 GRIT 150, 50 SHEETS PER PACKAGE	EA	3	0	REV 7349	5350007218116
A-A-1200	58536	PAPER, ABRASIVE -A-A-1200 GRIT 220, 50 SHEETS PER PACKAGE	EA	3	0	REV 7349	5350002247209
A-A-1 200	58536	PAPER, ABRASIVE -A-A-1200 GRIT 360, 50 SHEETS PER PACKAGE	EA	3	0	REV 7349	
A-A-1200	58536	CLOTH, ABRASIVE -120 GRIT, 9 x 11 IN SHEET 50 PER PG	EA	3	0	9X11 SH 50 SH PER PG CON SUMABLE FOR TM 55-1520-210-23-1	
A-A-1200	58536	CLOTH, ABRASIVE -240 GRIT, 9 x 11 IN 50 EA PER PACKAGE	EA	3	0	9 IN X 11 IN LONG ,50 EA PER PG CONSUMABLE FOR	
A-A-1200	58536	PAPER, ABRASIVE -280 GRIT,GR8/0, 9X11 INCHES, 50 SHEETS PER PG	EA	3	0	REV 7349	5350002247205
A-A-1201	58536	PAPER, ABRASIVE GRIT SIZE 80,9X11 IN SHEET GRADE DESIGNATOR 1/0, 50 EACH PKG	EA	1	0	REV 7223	
A-A-1201	58536	PAPER, ABRASIVE -A-A-1201 GRIT 120, 100 SHEETS PER PACKAGE	EA	3	0	REV 7350	5350002210882
A-A-1201	58536	PAPER, ABRASIVE -A-A-1201 GRIT 150, 100 SHEETS PER PACKAGE	EA	3	0	REV 7350	5350001868821
A-A-1201	58536	PAPER, ABRASIVE -A-A-1201 GRIT 220, 100 SHEETS PER PACKAGE	EA	3	0	REV 7350	5350001868819
A-A-1202	58536	PAPER, ABRASIVE -60 GRIT, 9X10 SHEET, 100 SHEETS PER PACKAGE	EA	3	0	REV 7261	5350005986105

Downloaded from http://www.everyspec.com

CONSUMABLE ITEMS PART 1

P/N	FSCM	NOMENCLATURE	UM	EC	SL	ADDITIONAL INFO	NSN
A-A-1203	58536	LAPPING AND GRINDIN -280 GRIT ALUMINUM OXIDE OR SILICON CARBIDE, 1 LB CAN	LB	3	0	REV 7271	5350005792513
A-A-1203	58536	LAPPING AND GRINDIN 400 GRIT ALUMINUM OXIDE & SILICON CARBIDE, 1 LB CAN	LB	3	0	1 LB CN CONSUMABLE FOR TM 55-1520-210-23-1	5350001931348
A-A-1 206	58536	CLOTH, ABRASIVE SH					
A-A-1249	58536	PAPER, WRAPPING, TISS -TYPE 2 AND CLASS 1, 24 X 36 IN SHEET 480 PER PG	SH	3	0	REV 7271	8135002811435
A-A-1266	58536	TAG,S HIPPING -WHITE, 2.813 WIDE, 0.006 THK, 5.812 LONG, METAL EYELET	EA	3	0	REV 7274	8135002922345
A-A-132	58536	ERASER, RUBBER -12 EA PER BOX	EA	3	0	REV 6357, 7254	7510002237044
A-A-1452	58536	LACQUER -BLACK COLOR #17038, 1 GAL CAN	GL	3	6	REV 7271	8010002906158
A-A-1558	58536	PAINT, STENCIL COLOR-BLACK #37038, 1 QT CAN	QT	3	6	REV 7271	8010002927686
A-A-1558	58536	PAINT, STENCIL COLOR-WHITE #37875, 1 QT CAN	QT	3	6	NSN 8010-285-4913	
A-A-162	58536	CLOTH, CLEANING COLOR-TAN #23594,1000 EA 151N x 121N	EA	3	0	REV 7271	7920002929204
A-A-1632	58536	VARNISH, ASPHALT -BLACK. 5 GAL PAIL	GL	3	6	5 GAL PAIL TM 55-1500-345-23	8010001605856
A-A-1668	58536	BAG, PLASTIC -SIZE, 4X41N, 1,000 PER BOX	MX	3	0	REV 7224	8105008377754
A-A-1668	58536	BAG, PLASTIC SIZE, 6X61N, 1,000 PER BOX	MX	3	0	REV 7224	8105008377754
A-A-1668	58536	BAG, PLASTIC -SIZE, 9X 21N. 1,000 PER BOX	HD	1	0	REV 7224	
A-A-1668	58536	BAG, PLASTIC -TYPE 1, CLASS 1, GRADE A, FINISH 1, 500 EA BOX	EA	3	0	REV 6357, 7257	8105008377757
A-A-1668	58536	BAG, PLASTIC -TYPE 1,CLASS 1, GRADE C, FINISH 1. 500 EA BOX	EA	3	0	REV 6357, 7257	8105008377756

Downloaded from http://www.everyspec.com

CONSUMABLE ITEMS PART 1

P/N	FSCM	NOMENCLATURE	UM	EC	SL	ADDITIONAL INFO	NSN
A-A-1668	58536	BAG, PLASTIC -TYPE 1,CLASS 1, GRADE A, FINISH 2, 1000 EA	MX	3	0	REV 6357, 7257	8105008377755
A-A-1668	58536	BAG, PLASTIC -TYPE 2, CLASS 1, GRC, 1 HD, CLEAR	EA	3	0	REV 7273	8105005799285
A-A-1676	58536	FOIL METAL -75 FT ROLL 12 IN WIDE	FT	3	0	75 FT RO 12IN WIDE CONSU MABLE FOR TM 55-1500-204-25/1	8135008229433
A-A-1689	58536	TAPE, PRESSURE SENSI -TYI AND CL2, BLACK COLOR, 2IN WIDE X 108 FT LONG ROLL	EA	3	7	REV 7280	7510008807351
A-A-1722	58536	GRAIN, ABRASIVE -BLACK WALNUT SHELL, MIL-G-5634, TY 3,50 LB BAG	LB	3	0	REV 7275	5350000501094
A-A-1766	58536	PLASTIC SHEET -POLYVINYL CHLORIDE, CLEAR CL 8 13X816001N RL	IN	3	0	REV 7225	8135004765268
A-A-1830	58536	TAPE, PRESSURE SENSI -3 IN WD 60 IN LG NATURAL COLOR	IN	3	6	3 IN WD 60 IN LG NATURAL COLOR TM 55-1500-345-23	7510002812700
A-A-203	58536	PAPER, KRAFT, UNTREAT -TYPE 1 AND GRADE B, 615 FT ROLL	FT	3	0	REV 6357, 7257	8135001607776
A-A-203	58536	PAPER, KRAFT, UNTREAT -TYPE 1 AND GRADE B, 980 FT ROLL	FT	3	0	REV 6357, 7257	8135002903407
A-A-208	58536	INK, MARKING STENCIL -16 OZ AEROSOL CAN COLOR 37038 BLACK	PT	3	4	REV 7280	7510004697910
A-A-341	58536	PIGMENT, ALUMINUM -1 LB CAN	LB	3	7	REV 7350	8010006874019
A-A-371	58536	LINSEED OIL, BOILED -	GL	3	7	REV 6357	8010006848789
A-A-371	58536	LINSEED OIL, BOILED -1 GAL CAN	GL	3	7	REV 7271	8010001523245
A-A-39	58536	DETERGENT, GENERAL P-TYPE 1, 5 GAL CAN	GL	3	0	REV 7271	7930005262919
A-A-42A	58536	TALCUM POWDER EA					
A-A-44	58536	SOAP, SCRUBBING, ALKA-1 LB CARTON (POWDER)	EA	3	7	REV 7212	7930002312998
A-A-47	58536	SCOURING POWDER -	EA				
A-A-5	58536	DISHWASHING COMP -CLASS 2, 50 LB BOX OR SACK	LB	3	0	REV 6357, 7253	7930002814731

Downloaded from http://www.everyspec.com

CONSUMABLE ITEMS PART 1

P/N	FSCM	NOMENCLATURE		UM	EC	SL	ADDITIONAL INFO	NSN
A-A-50	58536	SOAP, TOILET	-5 LB BOX	LB	3	6	REV 7273	8520002280985
A-A-531	58536	RAG, WIPING COLORS, 50 LB BALE	-A-A-531, GRB, MIXED	LB	3	0	REV 7156	7920002051711
A-A-531	58536	RAG, WIPING BALE	-A-A-531 GR A, 50 LB	LB	3	0	REV 7212	7920001489666
A-A-549	58536	CUSHIONING MATERIAL	-250 FT ROLL	FT	3	0	REV 7257	8135001429004
A-A-549	58536	CUSHIONING MATERIAL	-500 FT ROLL	FT	3	0	REV 7257	8135001429016
A-A-549	58536	CUSHIONING MATERIAL	-500 FT ROLL	FT	3	0	REV 7257	8135001429005
A-A-549	58536	CUSHIONING MATERIAL	-500 FT ROLL	FT	3	0	REV 7257	8135001429008
A-A-665	58536	LACQUER		OZ	3	6	16 OZ AEROSOL CAN	8010005152487
A-A-665	58536	LACQUER 1 PT SPRAY CAN	-BLACK, COLOR 37038,	PT	3	6	REV 7273	8010005825382
A-A-6654	58536	LACQUER LUSTERLESS, 1 PT AEROSOL CAN	-BLACK COLOR #37038	PT	3	6	REV 7271	8010005825382
A-A-711 TY2	58536	DRY CLEANING SOL	OZ	3	0	55 GALLON DRUM		6850002858011
A-A-711 TY2	58536	DRY CLEANING SOL	PT	3	0	55 GALLON DRUM		6850002858011
A-A-711 TY2	58536	DRY CLEANING SOL	GL	1	0	55 GALLON DRUM		6850002858011
A-A-833	58536	TAPE, PRESSURE SENSI IN WIDE ROLL	-2160 IN LONG AND 3	YD	3	4	REV 7350	7510002666707
A-A-833	58536	TAPE, PRESSURE SENSI 2 IN WIDE ROLL	-TYPE 2,60 YD LONG X	YD	3	4	60 YD LONG X 2 IN WIDE RO CONSUMABLE FOR TM 55-1520-210-23-1	7510002902026
A-A-833 WIDE, 60 YARD ROLL	58536	TAPE, PRESSURE SENSI	-OPAQUE, 1 INCH	YD	3	4	REV 7273	
A-A-857 GAL CAN	58536	THINNER, DOPE AND LA	-L COMPOSITION, 1	GL	3	7	REV 7271	8010001605787
A-A-857	58536	THINNER, DOPE AND LA	-LACQUER, 5 GAL CAN	GL	3	7	REV 7350	8010001605788

Downloaded from http://www.everyspec.com

CONSUMABLE ITEMS PART 1

P/N	FSCM	NOMENCLATURE	UM	EC	SL	ADDITIONAL INFO	NSN
A-A-87	58536	PENCIL -COLOR YELLOW, SIZE EXTRA THICK, 6 25 IN LONG, 12 PER BOX	EA	3	0	REV 7273	7510002644612
A-A-87	58536	PENCIL -COLOR WHITE, EXTRA THICK, 6.25 IN LONG, 12 PER BOX	EA	3	0	REV 7274	7510002401525
A-A-870	58536	ANTIFREEZE -O-A-548 OBS REF USE A-A-870 1 GAL CAN	GP	3	7	REV 7225	
A-A883	58536	TAPE, PRESSURE SENSI -	RO				
A-A-883	58536	TAPE, PRESSURE SENSI -TYPE 1, 2160 IN LONG AND 1.500 IN WIDE ROLL	YD	3	4	REV 7351	7510002666709
A-A883	58536	TAPE, PRESSURE SENSI -2160 IN LONG AND 2 IN WIDE ROLL	YD	3	4	REV 7351	7510002666710
A-A-883	58536	TAPE, PRESSURE SENSI -3 IN DIA, 1 IN WD, 60 YD RL, CLEAR	YD	3	4	REV 7273	7510002666712
A-A-883	58536	TAPE, PRESSURE SENSI -TY 2, 2 IN WD X 2160 IN ROLL	YD	3	4	REV 7351	7510002902026
A-A-884	58536	TAPE, PRESSURE SENSI -2160 IN LONG AND 2 IN WIDE ROLL	YD	3	4	REV 7243	7510000797906
A-A-884	58536	TAPE, PRESSURE SENSI -60 YD LONG X 1 IN WIDE ROLL	YD	3	4	60 YD LONG & 1 IN WIDE RO CONSUMABLE FOR TM 55-1520-210-23-1	7510011467767
A-A-895	58536	SODIUM HYDROXIDE, TE -	LB				
A-1177B	03481	ADHESIVE 4 OUNCE KIT	EA	3	0	REV 7162	8040010363771
A-298	22527	SULFURIC ACID, TECHN -	PT				
A-4094	71984	PRIMER, ADHESIVE	PT	1	2	REV 6231	8040008454304
AC-12	55208	CLEANING COMPOUND GL					
ACCELERATOR NO 4	30676	ACCELERATOR -HAZY TO CLEAR AMBER, 8 OZ CAN	OZ	3	0	REV 7273	8040011812355
ACCESS	81996	ACCESS -THIS MODEL FOR ALL GEN ACCESSORIES	EA	1	0		

Downloaded from http://www.everyspec.com

CONSUMABLE ITEMS PART 1

P/N	FSCM	NOMENCLATURE		UM	EC	SL	ADDITIONAL INFO	NSN
ACTUSOL776	72008	CLEANING COMPOUN	-55 GL DRUM	GL	3	6	6850001817280	
ADOLOXOPENCOAT	06565	PAPER, ABRASIVE GRIT 9X11 IN SH	-ALUMINUM OXIDE 100	SH	3	0	REV 7225	
AERO-CLENE F	57042	CLEANING COMPOUND		GL				
AERO-CLENE PF	57042	CLEANING COMPOUND		GL				
AEROSHELLGREASF2	54527	GREASE, AIRCRAFT		LB	1	6	REV 6235	9150001450268
AEROSHELLTURBINEOIL500	54527	LUBRICATING OIL		QT				
AEROSHELLTURBINEOIL550	97854	LUBRICATING OIL		QT				
AEROSHELL17	54527	GREASE, MOLYBDENUM	-	LB				
AEROSHELL1 7-1 LB	54527	GREASE, MOLYBDENUM	-	LB				
AEROLUBRIPLATE	73219	GREASE, GENERAL PUMP	-1 LB CAN	LB	3	0	REV 7275	9150000686268
AE10187-001	00624	DIP COMPOUND, SLEEVE	-	OZ	3	4	8030009070879	
AF-126-2	04633	ADHESIVE		SH	1	F	REV 6230	8040001161437
AH-4A	02731	AH-64A		EA	1	0		
AH1S	81996	AH-1S AH-1 S CONSUMABLE	-MODEL RECORD FOR	EA	A	0		
ALODINE1200S	84063	CORROSION RESISTANT	-4 OZ JAR	OZ	3	6	REV 7218	8030000572354
ALODINE600	84063	CORROSION RESISTANT	-	QT	3	6	8030008113723	
ALODINE600	84063	CORROSION RESISTANT FORM, METHOD B	-2 LB, 1ACLASS, 2	LB	3	6	REV 7275	8030008113723
AMS4777	81343	BRAZING ALLOY, NICK	-REV 7211	EA	3	0	REV 7211	3439002568239
AMS4777	81343	BRAZING ALLOY, NICK FORM, LB	-NICKEL 3/16 WIRE	LB	3	0	REV 7225	3439001399214
AMS5784 0 062	81343	ROD, WELDING ROUND ROD	-36 IN LONG & 062	LB	3	0	36 IN LONG & 0 062 ROUND ROD-GAS METAL ARC-ALL POSITIONS	3439004719899
AMS5786	81343	ROD, WELDING	-LB	LB	3	0	REV 7223	3439001669584

Downloaded from http://www.everyspec.com

CONSUMABLE ITEMS PART 1

P/N	FSCM	NOMENCLATURE	UM	EC	SL	ADDITIONAL INFO	NSN
AMS5786 0 062 361N LG	81343	ROD, WELDING -0 062 OD 36 IN LONG CL ERNIMO-3 NICKEL ALLOY FILLER OXYACETYL	LB	3	0	REV 7280	3439001788597
AMS5799 5/32	81343	ELECTRODE, WELDING -AMS5799 TYB, POUND	LB	3	0	REV 6357 REV 7237	3439011028659
AMS5832 0 045	81343	ROD, WELDING -NICKEL ALLOY FILLER, STRAIGHT FORM, LGTH 361N, LB	LB	3	0	REV 7225	3439000085067
AN995C20	88044	WIRE, NONELECTRICAL -	LB	1	0		9505002212650
AN995C41	88044	WIRE, NONELECTRICAL -	FT	1	0	REV 6231	9505003313275
AN995C41	88044	WIRE, NONELECTRICAL -ANNEALED FORM 1 COMP 302 OR 304, COND A, 041 DIA, 1 LB ROLL	LB	3	0	REV 7275	9505003313275
ASSEMBLY FLUID 1	56385	ASSEMBLY FLUID -ASSEMBLY FLUID 1 GAL CONTAINER, 4 OZ TUBE	OZ	3	Q	REV 7351	9150001595012
ASTM D 1193	81346	DISTILLED-DEIONIZED -DISTILLED-DEIONIZED WATER, 1 GAL BOTTLE	GL	3	0	REV 7351	6810006826867
ASTM D 237	81346	SHELLAC,DRY -ASTM D 237, TY1, GRA 1 LB CAN	LB	1	7	REV 7224	8010001416081
AVREXSTURBO260	77988	LUBRICATING OIL	QT				
AVREXSTURBO265	77988	LUBRICATING OIL -	QT				
AWSA5.10-80 ER4043 0 062	31505	ROD, WELDING -0 062 OD 36 IN LONG QQ-R-566 CL 4043 ALUM ALLOY FILLER OXYACE	LB	3	0	REV 7280	3439001788590
AWSA5.14-76 ERNIMO-30 062	31505	ROD, WELDING -14-76 ERNIMO-3, 10 LB PG 36 IN LONG & 062 ROUND ROD	LB	3	0	10 LB PG 36 IN LONG & 0 062 ROUND ROO-GAS TUNSTEN ARC	3439001788597
AWSA5 9-77 ER 310 0 125	31505	ROD, WELDING -CLASS 3,36 IN LONG & 125 IN ROUND GAS TUNGSTEN ARC	LB	3	0	36 IN LONG & 0125 IN RO UND-ALL POSITIONS-GAS TUNGSTEN ARC	3439002881469
AWSA5 9-81 ER347 0 188	31505	ROD, WELDING -CL ER347, 36 IN LONG& 188 ROUND ROD	LB	3	0	36 IN LONG & 0188 ROUND ROD-OXYACETYLENE-ALL POSITIONS	3439002881471
A242	22527	PHOSPHORIC ACID, ACS -4LITER BOTTLE	PT	3	0	REV 6357 REV 7237	6810011500339
A4 METAL SET	90414	ADHESIVE -16 OZ CAN	OZ	3	0	REV 7261	8040010887186
A4405	04347	RESIN -1 QUART CAN	QT	3	4	REV 7273	8040001049505

Downloaded from http://www.everyspec.com

CONSUMABLE ITEMS PART 1

P/N	FSCM	NOMENCLATURE	UM	EC	SL	ADDITIONAL INFO	NSN
A665	94480	AMMONIUM FLOURIDE -	LB	3	0	REPLACES H2H701CMMM	6810009743621
A74	94480	BORIC ACID, ACS -1 POUND BOTTLE	EA	3	0	REV 7273	6810009735716
A934B	03481	PRIMER, ADHESIVE -1 PT CAN	OZ	3	4	1 PT CN CONSUMABLE FOR TM 55-1520-210-23-1	8040009432502
A934B	03481	PRIMER, ADHESIVE -1 PT CAN	PT	3	4	REV 7351	8040009432502
B-3100F	80000	PIGMENT, RED OXIDE -16 OZ SQUEEZE BOTTLE	OZ	3	7	REV 7280	8010010166584
BANDB3100	21361	CLEANING COMPOUND, E -16 OUNCE AEROSOL CAN	OZ	3	0	REV 7211	6850001817594
BB-A-106	81348	ACETYLENE, TECHNICAL -40 CUBIC FOOT GAS CYL	CF	3	0		6830002646755
BB-C-104	81348	CARBON DIOXIDE,TECH -CARBON DIOXIDE, TECHNICAL 50 LB BLOCK	LB	3	0	REV 7162	6830002470619
BB-C-104	81348	CARBON DIOXIDE,TECH -99 95 MIN WT CARBON DIOXIDE, SOLID BLOCK, 10 POUND PG	LB	3	0	REV 7273	6830010117848
BB-H-1168	81348	HELIUM, TECHNICAL -217 CU FT CYL	CF	1	0	REV 7229	6830006600027
BB-N-411	81348	NITROGEN, TECHNICAL -231 CUBIC FOOT	CF	3	0	REV 7351	6830010289402
BB-N-411	81348	NITROGENN TECHNICAL -TYPE 1 AND GRADE B AND CLASS 1, 231 CU FT CYLINDER	CF	3	0	REV 7271	6830002920131
BB-N-411,TY1,CL1,GRB	81348	NITROGEN,TECHNICAL -BB-N-411,TY1, CL1,GRB, 184 CUBIC FOOT CYLINDER	CF	3	0	REV 7161	6830007822641
BB-925	81348	OXYGEN, TECHNICAL -230 CUBIC FOOT CYL	CF	3	0	REV 7223	6830002920129
BBN411	81348	NITROGEN, TECHNICAL -BB-N-411 TY 1 GR B CL 2, 231 CU FT CYL	CF	3	0	REV 7223, 7243	6830002920732
BIGBARE	32204	CLEANING COMPOUND, S -CLEANING COMPOUND LIQUID SOLVENT DETERGENT, 1 GL CAN	GL	3	0	REV 7233	7930002618954
BMS5-7	81205	ADHESIVE	QT				
BMS8-45	81205	SEALING COMPOUND	OZ	1	2	REV 6230	8030007794700
BONDMASTERM24	01666	ADHESIVE -KIT,1GAL BASE PLUS 1QT ACTIVATUR, LIQUID, FOR GEN PURPOSE USE	OZ	3	5	REV 7275	8040001817784

Downloaded from http://www.everyspec.com

CONSUMABLE ITEMS PART 1

P/N	FSCM	NOMENCLATURE		UM	EC	SL	ADDITIONAL INFO	NSN
BOSTIK2292	22843	SEALING COMPOUND	-1 PINT CAN	OZ	1	0		
BOSTIK4006AAND406B	70707	ADHESIVE	-1 QT KIT	QT	3	4	REV 7261	8040003907960
BRAYCO 599	98308	CORROSION PREVENTIV	-CAN 8 OZ	OZ	3	7	REV 7351	6850001429582
BRAYCOTE687-1 LB	98308	GREASE, MOLYBDENUM	-	LB				
BRAYCO300	98308	LUBRICATING OIL	-	OZ				
BRAYCO756C	98308	HYDRAULIC FLUID		QT				
BRAYCO756D	98308	HYDRAULIC FLUID	-	QT				
BRAYCO757B	98308	HYDRAULIC FLUID	-	QT				
BRAYCO899	98308	LURICATING OIL	-	QT				
BRAYCO899G	98308	LUBRICATING OIL	-	QT				
BRAYC0899S	98308	LUBRICATING OIL	-	QT				
BRILLOSOAPPAD	92243	PAD, SCOURING	-10 PADS PER BOX	EA	3	0	REV 7218	7920007781660
BRULIN 1-4-77N	94058	CLEANING COMPOUND	-	GL				
BULK	81996	BULK AIRCRAFT MAINTENANCE MANUAL	-USED FOR GENERAL	EA	3	0		
BUTYLCARBITOL	20638	DIETHYLENE GLYCOLM	-1 GALLON CAN	GL	3	0	REV 7157	6810003518185
B7444-1-1-4C	81349	INSULATION SLEEVING THICKNESS 017-.023, ID 204-.224	-TY 1, CLASS1 CLEAR, WALL	FT	3	0	REV 7273	5970008920966
B7444-3-1-18B	81349	INSULATION SLEEVING BLACK, WALL THICKNESS .016, ID 040-.049	-TY 1, CLASS 1,	FT	3	0	REV 7273	5970008818200
C-B-191	81348	BEESWAX,TECHNICA	-1 LB CAKE	LB	3	7	REV 7217	9160002531171
C-0-376	81348	CUTTING FLUID	-5 GAL CAN	GL	3	7	REV 7271	9150002319054
C-1-79	56921	CLEANING COMPOUND	-	GL				
C-519	07124	TAPE, DUCT	-	YD				
CALOL4056	81230	GREASE, MOLYBDENUM	-	LB				
CASTROLHYSPINA	07950	HYDRAULIC FLUID	-	QT				

Downloaded from http://www.everyspec.com

CONSUMABLE ITEMS PART 1

P/N	FSCM	NOMENCLATURE	UM	EC	SL	ADDITIONAL INFO	NSN
CASTROL205	07950	LUBRICATING OIL QT					
CCC_C440	81348	CLOTH, CHEESECLOTH -TYPE 1 AND CLASS 2, 50 YD ROLL 38 5 IN WIDE	YD	3	0	REV 7271	8305002623321
CCC-C-440TY1, CL1	81348	CLOTH, CHEESECLOTH -CCC-C-441 TY1, CL1, 38 IN WIDE, LENGTH IN YARDS	YD	3	0	REV 7161	8305002222423
CCCC440	81348	CLOTH, CHEESECLOTH -CCC-C40 TY-2 CL-B, SQUARE YARD	YD	1	0	REV 7351	8305002673015
CCCC458	81348	CLOTH, FLANNEL -CCCC458 361N MIN TY-III CL-2 WHITE IN COLOR	YD	1	0	REV 7232	8305006415606
CCCC46	81348	CLOTH, NONWOVEN -TY I, CL 2, WHITE #37886, 36 IN WD 50 YD ROLL	YD	3	0	REV 7271	8305007532967
CD7	36540	PLUG, MACHINE THREAD -EACH	EA	3	0	REV 7351	5365007730760
CD7L	36540	PLUG, MACHINE THREAD -	EA	1	0	REV 6231	5365007730760
CD8	99017	CAP, PROTECTIVE, DUST -EACH	EA	3	0	REV 7211	5340006804394
CEE-BEE R-677	71361	CLEANING COMPOUND -	GL				
CF206	81348	CLOTH, FELT -TYPE 1, 60 IN WIDE AND 0625 THICK	SF	3	0	60 IN WIDE AND 0 0625 THICK CONSUMABLE FOR TM 55-1520210-23-1	8305002621672
CH-47D	77272	CH-47D -MODEL RECORD FOR CH-47D CONSUMABLES	EA	A	0		
CHEMICALKIT120	84063	COATING KIT, ALUMINU -KIT, 1 QT BOT DEOXIDINE, 1 QT BOT ALODINE	QT	3	6	REV 7351	8030007794699
CHEVRONJETENGINEOIL5	81230	LUBRICATING OIL	QT				
CHEVRONJETENGINEOIL5	87510	LUBRICATING OIL	QT				
CHO-SIL1401	18665	SHIELDING GASKET, EL	EA	3	0	REV 7253	5999010124206
CH54B	81996	CH-54B -MODEL RECORD FOR CH-54B CONSUMABLE	EA	A	0		
CLARCO JEC-1	91608	CLEANING COMPOUND -	DR				
CLARCO JEC-1	91608	CLEANING COMPOUND, A -55 GALLON DRUM	GL	3	0	REV 7211	6850005971528
CLARCO 124F	91608	CLEANING COMPOUND -	GL				

Downloaded from http://www.everyspec.com

CONSUMABLE ITEMS PART 1

P/N	FSCM	NOMENCLATURE	UM	EC	SL	ADDITIONAL INFO	NSN
CLARCO 2100-B-1	91608	CLEANING COMPOUND	GL				
CLARCOJEC	91608	CLEANING COMPOUND	DR				
CLP-7	27412	CLEANER, LUBRICANT A -1 GL BOTTLE	GL	1	7		9150010536688
COR CIR TK	57042	CLEANING COMPOUND -	GL				
CORFIL 615/DTA	07452	EDGING COMPOUND -1 QT CAN	QT	3	4	REV 7271	8030001490137
COSMOLINE1116	73277	LUBRICATING OIL -	OZ				
COSMOLUBE615	73277	GREASE, AIRCRAFT	LB				
COSMOLUBE615	73277	GREASE, AIRCRAFT	LB				
CPAREN4-1 PAREN	05972	SEALING COMPOUND	CC	1	6	REV 6230	8030009647537
CV4-10BLUE10CCPLASTICBOTTLE	05972	SEALING COMPOUND	CC				
CYANOBRIK	18873	SODIUM CYANIDE, TECH -	LB				
CYCOM 950/220	70361	CLOTH, PREIMPREGINAT -EACH	EA	1	0	REV 7232	1680011968355
C101061155	88818	INSULATING COMPOUND -	KT		F		5970010297961
C320	70752	CLOTH, ABRASIVE	BD		0		5350001740997
D 1153	81346	METHYL ISOBUTYL KET -ASTM D 1153 TY2, 55 GL DRUM	GL	3	0	REV 7243	6810002812761
D1153	81346	METHYLISOBUTYLKET -ASTM D 1153TY2, 5GL DRUM	GL	3	0	REV 7243	6810001805976
D 1153	81346	METHYL ISOBUTYL KET -1 GAL CAN	GL	3	0	REV 7351	6810002863785
D 846	81346	XYLENE, TECHNICAL -5 GAL CAN	GL	3	7	5 GAL CAN5 TM 55-1500-345-23	6810005844070
D846	81346	XYLENE, TECHNICAL -1 GAL CAN	GL	3	7	REV 7280	6810005986600
DAPCOTAC 3200	58093	ADHESIVE	LB	3	0		
DAPCOTAC3300	58093	ADHESIVE -1 QUART KIT	QT	3	2	REV 7273	
DC S2260	71984	PRIMER, ADHE51VE -1 PT CAN	PT	3	0	REV 7275	8040007129058

Downloaded from http://www.everyspec.com

CONSUMABLE ITEMS PART 1

P/N	FSCM	NOMENCLATURE		UM	EC	SL	ADDITIONAL INFO	NSN
DC 200 10CSTKS	71984	DAMPING FLUID	-8 LB CAN	LB	3	0		
DC 3402	71984	LUBRICANT, SOLID FIL	-	OZ	1	H	REV 6230	9150007540064
DC 3402 HEAT SINK COMPOUND	71984	LUBRICANT, SOLID FIL		OZ				
DC 4	71984	SILICONE COMPOUND		OZ				
DC 4 COMPOUND	71984	SILICONE COMPOUND		OZ				
DDD-R-30	81348	RAG, WIPING		EA	3	0		7920002051711
DDDC301	81348	CLOTH,CHEESECLOTH 10 LB PACKAGE	-TYPE 1 AND CLASS A,	LB	3	0	REV 7271	8305001412503
DDDT541	81348	TOWEL, MACHINERY WIP 18 IN LG COTTON, 50 PER BOX	-DDDT541 165 IN W	EA	3	0	REV 7243	7920002601279
DEF2333PX7	U1857	PETROLATUM, TECH	-	LB				
DEXRON II	24617	HYDRAULIC FLUID,AUT	-1 QT CAN	OZ	3	7	REV 7362	9150006982382
DIVERSEY 299	33759	SCALE CONDITIONER	-200 LB DRUM	LB	3	0	200 LB DR CONSUMABLE FOR TM 55-1520-210-23-1	6850010316399
DOD-C-24176	81349	SEALING COMPOUND	-TYPE 2, 1 QT KIT	QT	3	4	REV 7272	8030006708553
DOD-L-25681	81349	LUBRICATING OIL, MOLYBDENUM DISULFIDE 1 LB CAN	-DOD-L-25681 LUB OIL	LB	1	6	REV 7232	9150005437220
DS437	07950	HYDRAULIC FLUID	-	QT				
DTD5527	K0249	GREASE, MOLYBDENUM	-	LB				
EA 9210	12405	PRIMER, ADHESIVE	-EA 9210, 1GALLON CAN	GL	3	0	REV 7161	8040012047187
EA 9309.3NA	33564	ADHESIVE METAL SKIN & HONEYCOMB REPAIR	-EPOXY PLASTIC KIT,	OZ	7	H	REV 7365	8040011633481
EA 9313	33564	ADHESIVE	-2 LB KIT	LB	3	0	REV 7253	8040011074000
EAGLE GELA	18425	DESICCANT, ACTIVA	-	DR				
EAGLE GEL B	18425	DESICCANT, ACTIVA	-	DR				

Downloaded from http://www.everyspec.com

CONSUMABLE ITEMS PART 1

P/N	FSCM	NOMENCLATURE	UM	EC	SL	ADDITIONAL INFO	NSN
EASE OFF 990	87889	ANTISEIZE COMPOUND -GRAPHITE AND MOLYBDENUM, 1800 DEG F TEMP RATIND, 1 PT CAN	EA	3	4	REV 7275	8030007784277
EA901NA/B1	33564	ADHESIVE -1 POUND KIT	LB	3	4	REV 7273	8040008313403
EA9203	33564	PRIMER, ADHESIVE -1 QT CAN	OT	3	0	REV 7240	8040010169963
EA9309 2	33564	ADHESIVE -PLASTIC EPOXY PASTE ADHESIVE, 1 QUART CAN	QT	3	4	REV 7238	8040011175385
EA9309A/B	33564	ADHESIVE -1 QT KIT	EA	3	4	REV 7274	8040010128749
EA9314 PARTS A/B	04347	ADHESIVE -1 QT KIT	QT	3	0	REV 6219, REV 7198	8040011891284
EA934	33564	ADHESIVE -1 QUART KIT	QT	3	0	REV 7365	8040000168662
EA9601	33564	ADHESIVE	SH				
EC-1357	76381	ADHESIVE -BONDS RUBBER TO STEEL, 1 PINT CAN	PT	1	4	REV 7232	8040002738717
EC-1751 B/A	04963	ADHESIVE -ADHESIVE PLASTIC EPOXY, 2 OZ KIT	OZ	3	2	REV 7238	8040001817548
EC-1751BA	04963	ADHESIVE -1 GL KIT	GL	1	4	REV 7232	8040001375622
EC-3532 B/A	04963	ADHESIVE -1 PINT KIT	PT	1	0	REV 7365	8040011525334
ECCOBOND45	04552	ADHESIVE -2 LB KIT	LB	3	2	REV 7233	8040001487183
EC12	95760	CAP, PROTECTIVE, DUST -EACH	EA	3	0	REV 7224	5340002138881
EC12	99017	CAP, PROTECTIVE, DUST -	EA	1	0	REV 6232	5340002138881
EC1252	04963	SEALING COMPOUND -5 OZ TUBE	OZ	3	2	1 EACH	8030007794700
EC1357	76381	ADHESIVE	QT				
EC1357	04963	ADHESIVE -1 QT CAN	QT	3	4	REV 6219 REV 7237	8040001658614
EC1675B	76381	SEALING COMPOUND -MIL-S-8802 TY 2 CL B-2, QT KIT	EA	3	3	REV 8004	8030006850915
EC1675BAAM1-2KT25	04963	SEALING COMPOUND	OZ	1	3	REV 6232	8030007535008

Downloaded from http://www.everyspec.com

CONSUMABLE ITEMS PART 1

P/N	FSCM	NOMENCLATURE	UM	EC	SL	ADDITIONAL INFO	NSN
EC18	72599	CAP, PROTECTIVE DUST -	EA				
EC1945 B/A	76381	PRIMER, ADHESIVE -EPOXY RESIN PLASTIC 1 QT CN KIT	QT	1	4	REV 8013	8040000656578
EC2126	76381	ADHESIVE -CONFORMS TO MMM-A-1617 TYPE 3, 1 PT CAN	PT	3	4	REV 7233	8040002629011
EC2216 B/A	04963	ADHESIVE -1 QT KIT	QT	1	2	REV 7232	8040001450530
EC2216 B/A	04963	ADHESIVE -PLASTIC EPOXY RESIN, PASTE FORM KIT W/CATALYST, 2 OZ	OZ	3	2	REV 8004	8040001450019
EC3549BA	04963	ADHESIVE -1 QT KIT	QT	3	0	REV 7232	8040010164726
EC711	76381	ADHESIVE -SYNTHETIC RUBBER,TYPE 2,1-QT-CNS	QT	1	2	REV 7232	8040002904301
EC765	94962	ADHESIVE -RUBBER SYNTHETIC,1 PT CAN, LIQUID FORM	OZ	3	4	REV 7275	8040006640439
EC776	04963	ADHESIVE -GEN PURPOSE SYNTHETIC RESIN 1 GAL CAN	GL	1	4	REV 7232	8040009954153
EC776SR	02607	ADHESIVE -EC776SR TY 2, 1 GL CAN LIQUID	GL	3	6	REV 7252	8040002660818
EC801	04963	SEALING COMPOUND -1 GL KIT	GL	3	4	REV 7273	8030003226928
EC847	04963	ADHESIVE -ADHESIVE RUBBER SYNTHETIC COLOR BROWN, 1 QUART CAN	QT	3	4	REV 7238	8040003907959
ED-366	55208	CLEANING COMPOUND -	GL				
ELECTROMOLY11	85932	GREASE, MOLYBDENUM -	LB				
EPIKOTE828	K2379	ADHESIVE	QT	1	4	REV 6231	8040008226430
EPK1C	04347	ADHESIVE -123 GRAM TUBE KIT	GM	3	4	REV 7233	8040007770631
EPOCAST 50A	99384	ADHESIVE -1 GALLON KIT	GL	3	4	REV 7273	8040001489849
EPOCAST169-9H6	99384	SEALING COMPOUND -KIT, 1 QT CAN AND REQUIRED AMOUNT OF CATALYST	EA	3	4	REV 7243	8030001805931

Downloaded from http://www.everyspec.com

CONSUMABLE ITEMS PART 1

P/N	FSCM	NOMENCLATURE	UM	EC	SL	ADDITIONAL INFO	NSN
EPOCAST31A	99384	PLASTIC MOLDING MAT -KIT CONTAINS 5 GALS OF RESIN AND 1 GAL OF HARDENER	GL	1	H	REV 7232	9330007382626
EPOLUX100E6AS	93981	PAINT, EPOXY	EA	3	4		8010008666810
EPON826	86961	EPOXY RESIN -1 GAL CAN	GL	3	4	REV 7274	8030001449658
EPON828	86961	ADHESIVE -1 QUART CAN	QT	3	4	REV 7212	8040008226430
EPON828-1 QTCN	86961	ADHESIVE	QT	1	4	REV 6231	8040008226430
EPON96OF	33564	ADHESIVE -2 QT BASE AND 1 QT CATALYST	QT	1	4	REV 7253	8040010800361
EXTRAHIGHPURITYHELIUM	90808	HELIUM, EXTRA HIGH -213 CU FT CYL	CF	3	0	REV 7223	6830000017989
EZ1000		POLISH, EZ CLEAR	KT	7	4	Refer to para 10-15.2	
EZ1100		POLISH, EZ CLEAR SPARES KIT	KT	7	4	Refer to para 10-15.2	
EZ1200		POLISH, EZ CLEAR PREP	GL	7	4	Refer to para 10-15.2	
EZ1300		POLISH, EZ CLEAR CLEANER	GL	7	4	Refer to para 10-15.2	
E2833	16193	EPOXY COATING KIT -GRAY 1 QT KIT	EA	3	4	REV 7275	8010008913112
F-1-BLACK	01195	INK, STAMP PAD -BLACK LIQUID 16 OZ BOTTLE	OZ	3	6	REV 8004	7510004386804
FC-100	15819	CAP, PROTECTIVE, DUST -	EA	3	0	REV 7157	5340009177850
FELPROC5	73165	ANTISEIZE COMPOUND -	LB				
FF144	06565	STONE, SHARPENING -FF144, FINE, 4X.5X.5, 1 EACH	EA	3	0		5345002475950
FF26	99017	CAP, PROTECTIVE, DUST-EACH	EA	3	0	REV 7224	5340005896020
FGA 32600	28153	ADHESIVE, TAPE -	IN	1	0		
FH-119	82925	CLEANING COMPOUND -	GL				
FP221	33870	HYDRAULIC FLUID -	QT				
FREONTF 160ZCAN	18598	CLEANING COMPOUND -	CN				
FRV-1106	01139	SEALING COMPOUND -	OZ				
FR8600/281	26348	CLOTH, PREIMPREGINAT -YARD	YD	1	0	REV 7232	1680011968355
FT136	73842	CLOTH, LAMINATED -NYLON, 25 OZ PER SQ YD, 2 PLY, BLACK, 34 IN DIA	YD	3	0	REV 7273	8305003505592

Downloaded from http://www.everyspec.com

CONSUMABLE ITEMS PART 1

P/N	FSCM	NOMENCLATURE	UM	EC	SL	ADDITIONAL INFO	NSN
F900TORQUESEALORANGE	01195	SEALING COMPOUND -ORANGE, 1/2 OZ TUBE	OZ	3	0	REV 7275	8030011250055
G-624	01139	SILICONE COMPOUND	OZ				
GA1OAJ1	26512	ADHESIVE	QT	1	4	REV 6302	8040001658614
GA1OOAU1	26512	ADHESIVE	QT	1	4	REV 6302	8040001658614
GG-D-226	81348	DEPRESSOR, TONGUE,WO-	EA	3	0	100 TO A BOX	6515007534533
GG-D-226	81348	DEPRESSOR, TONGUE,WO -2 TYPE, 6IN LONG X 0 750 WIDE, 500 PER BOX	EA	3	0	REV 7280	6515007534533
GG-M-00114	81348	MARKER, TUBE TYPE -COLOR ORANGE 1 DOZEN PER BOX	EA	3	0	REV 7271	7520000790286
GG-M-00114	81348	MARKER, TUBE TYPE -COLOR-RED, 1 DOZEN PER BOX	EA	3	0	1 DZ PER BOX CONSUMABLE FOR TM 55-1520-210-23-1	7520009731062
GG-M-00114	81348	MARKER, TUBE TYPE -COLOR BLACK, 1 DOZ	EA	3	0	REV 7280	7520009731059
GGGC520	81348	CLOTH, ABRASIVE GRIT 600, EXTRA FINE, SIZE 3 67X9 IN, 100 SH PER BUNDLE	EA	3	0	REV 8004	5350001740985
GGM00114	81348	MARKER, TUBE TYPE -	DZ	3	0	EACH	7520002302734
GGS921TYPE1SIZE1	81348	SYRINGE, HYPODERMIC -FOR GENERAL PURPOSE USE	EA	3	0	6515005142395	
GLYPTAL1201B	24446	SEALANT -1 PINT CAN	OZ	3	0	REV 7275	8030007946807
GOLD STANDARD 20/12 CUT BULK	57687	TACK CLOTH -1008 SH PER PG	SH	3	0	REV 7274	4940011989333
GRADEE	05972	SEALING COMPOUND -MIL-S-22473 GR E, 50 CUBIC CENTIMETER BOTTLE	CC	3	5	REV 7219	8030000812328
G203-063-010	88818	STRAP, TIEDOWN, ELECT -	EA	1	0	REV 6230	5975009032284
G243640-19	64959	COVER, ELECTRICAL CO -EACH	EA	3	0	REV 7223	5340008219839
H-B-00481	81348	BRUSH, SANITARY -1 TYPE AND 2 CLASS AND DUTY A	EA	3	0	REV 7253	7920007725800
H-B-00621	81348	BRUSH, STENCIL -FOUNTAIN STYLE, TYPE F, EACH	EA	3	0	REV 6357 REV 7237	7520002489285

Downloaded from http://www.everyspec.com

CONSUMABLE ITEMS PART 1

P/N	FSCM	NOMENCLATURE	UM	EC	SL	ADDITIONAL INFO	NSN
H-B-643 TY2CL1SZ1	80244	BRUSH, ACID SWABBING -	EA	3	0	REV 8004	7920005142417
HERESITEP-413-D	73159	RESIN COATING, THERM -9 8 LB CAN	LB	3	0	REV 7211	8030010424115
HMS16-1086	02731	ETHYLENE PROPYLENE -	SF	3	1	REV 7253	6810011884522
HMS16-1118TY1CL1	02731	ADHESIVE -SILASTIC 732 RTV, BLACK, 7 OZ TUBE	OZ	3	D	8040008510211	
HMS20-1155	02731	GREASE, TRANSMISSION -5 LB CAN	LB	1	0	REV 7232	9150012121409
HS13	06565	STONE, SHARPENING -EACH	EA	3	0	REV 7223	5345005769193
HS184-171	02731	TAPE, IDENTIFICATION -TAPE PNEUMATIC SYS PRESS COLOR ORANGE&BLUE MIL-T-9906	IN	7	0	MAKE APPENDIX	7510012129643
HS184-1710	02731	TAPE, IDENTIFICATION -PNEUMATIC SYS ENG BLEED COLOR ORANGE&BLUE MIL-T-9906-	IN	7	0	MAKE APPENDIX	7510012129652
HS184-172	02731	TAPE, IDENTIFICATION -TAPE PNEUMATIC SYS EXH COLOR ORANGE&BLUE MIL-T-9906	IN	7	0	MAKE APPENDIX	7510012129644
HS184-175	02731	TAPE, IDENTIFICATION -TAPE PNEUMATIC SYS RESERVOIR PRESSURIZATION COLOR ORANGE&BLUE	IN	7	0	MAKE APPENDIX	7510012129645
HS184-43	02731	TAPE, IDENTIFICATION -TAPE FUEL DRAIN COLOR RED MIL-T-9906	IN	7	0	MAKE APPENDIX	7510012129642
HS184-702	02731	TAPE, IDENTIFICATION -TAPE HYD SYS PUMP PRESS PRI COLOR BLUE&YELLOW MIL-T-9906	IN	1	0	MAKE APPENDIX	
HS184-705	02731	TAPE, IDENTIFICATION-TAPE HYD SYS CONT PRESS PRI COLOR BLUE&YELLOW MIL-T-9906	IN	7	0	MAKE APPENDIX	7510012129646
HS184-706	02731	TAPE, IDENTIFICATION -TAPE HYD SYS CONT RTN PRI COLOR BLUE&YELLOW	IN	1	0	MAKE APPENDIX	7510012129647
HS184-711	02731	TAPE, IDENTIFICATION -TAPE HYD SYS GSE PRESS UTIL COLOR BLUE&YELLOW MIL-T-9906	IN	7	0	MAKE APPENDIX	7510012129648
HS184-712	02731	TAPE, IDENTIFICATION -TAPE HYD SYS GSE RTH UTIL COLOR BLUE&YELLOW MIL-T-9906	IN	7	0	MAKE APPENDIX	7510012129649
HS184-722	02731	TAPE, IDENTIFICATION -TAPE HYD SYS PYLON PRESS COLOR BLUE&YELLOW MIL-T-9906	IN	1	0	MAKE APPENDIX	7510012129650

Downloaded from http://www.everyspec.com

CONSUMABLE ITEMS PART 1

P/N	FSCM	NOMENCLATURE	UM	EC	SL	ADDITIONAL INFO	NSN
HS184-723	02731	TAPE, IDENTIFICATION -TAPE HYD SYS PYLON RTN COLOR BLUE &YELLOW MIL-T-9906	IN	7	0	MAKE APPENDIX	7510012129651
HS4863-1	02731	CABLE, ELECTRICAL -FEET	FT	1	0	REV 7232	6145011866912
HS5313A3001	02731	CABLE, POWER, ELECTRI -FEET	FT	1	0	6145011866983	
HS5313A3002	02731	CABLE, POWER, ELECTRI -FEET	FT	1	0	REV 7232	6145011866984
HS5313A3003	02731	CABLE, POWER, ELECTRI -FEET	FT	1	0	REV 7232	6145011866985
HS5313A4001	02731	CABLE, POWER, ELECTRI -FEET	FT	1	0	REV 7232	6145011866986
HS5313A4002	02731	CABLE, POWER, ELECTRI -FEET	FT	1	0	REV 7232	6145011866987
IFRR CLEAR/7581	86281	CLOTH, PREIMPREGNATE -	YD	3	F	MAKE APPENDIX	1680012184374
INTEX 8019	78304	CLEANING COMPOUND -	GL				
IRIDITE14ALCOAT	99442	CORROSION RESISTANT -CLASS 1A, FORM 3, METHOD B, 1 GL BT	GL	3	4	REV 7257	8030008238039
JET STRIP SPECIAL	44389	CLEANING COMPOUND -	DR				
JJJ-C-86	81348	CASTOR OIL,TECHNICA -GRADE 2, 1GAL CAN	GL	3	7	REV 7271	9150002617455
JM89-3-64	92798	GASKET YD	YD	3	0		5330009381719
KK-C-300	81348	CHAMOIS LEATHER, SHE -B GRADE AND 2 CLASS AND M SIZE	EA	3	0	REV 7253	
K747-207-1	84955	REPAIR KIT, EROSION -1 KIT	EA	3	0	REV 7275	1560011612805
L-C-110	81348	CELLOPHANE -L-C-110 TY5 CL1, 1000 SHEETS PER PACKAGE	EA	3	0	REV 8006	8135005825170
L-P-0050	81348	PAD, SCOURING -PLASTIC OVAL SHAPE 4X3 51N , NOT SOAP IMPREGNATED TY1, SZ1	EA	3	0	REV 8006	7920006599175
L-P-410	81348	PLASTIC SHEET -SHEET	SH	1	0	REV 7232	9330010289334
L-P-410	81348	PLASTIC SHEET -SIZE 24X241N ,B1 0 IN THK, EXTRUDED	SH	3	0		
L-S-300	81348	TAPE, REFLECTIVE -TYPE 2 & CLASS 1 GREEN, 50 YD LONG X 1/2 IN WIDE ROLL	YD	3	0	50 YD LONG X 0 500 IN WI DE RO	9390001062466

Downloaded from http://www.everyspec.com

CONSUMABLE ITEMS PART 1

P/N	FSCM	NOMENCLATURE	UM	EC	SL	ADDITIONAL INFO	NSN
L-S-300	81348	TAPE, REFLECTIVE -TYPE 2 & CLASS 1 RED, 50 YD LONG X 1/2 IN WIDE ROLL	YD	3	0	50 YD LONG X 0 500 IN WI DE RO	9390001062467
L-T-100	81348	TAPE, PRESSURE SENSI -TY1, 0500 IN WIDE X 72 YD LONG ROLL	YD	3	0	REV 7280	7510001053092
L-T-90	81348	TAPE, PRESSURE SENSI -TYPE 1 & CLASS B, 2592 IN LONG X 1/4 IN WIDE ROLL	IN	3	0	2592 IN LONG X 0 250 WI DE RO	7510005045639
LAP5-0001-000-003	99189	LAPPING AND GRINDIN -	GL	1	0	5350012692244	
LC110	81348	CELLOPHANE -ROLL 3200 FT LONG, 15 IN WIDE, 0 0011THK, VII TY, CL 2	FT	3	0	REV 8006	8135000615819
LDC 4803	57868	BRUSH PLATING SOLUT -1 GAL BOTTLE	GL	3	M	REV 7275	6850003069596
LEAROK888	75554	BUFFING COMPOUND -GRIT VARIES FROM 5 TO 10 MICRONS, COMES IN A ROLL	EA	3	0	REV 7273	5350001657145
LEEDER 120-F	17209	CLEANING COMPOUND -	GL				
LLL-S-720	81348	STIRRING STICK, BEVE -UNIT OF MEASURE IS EACH 1000 PER PKG	EA	1	0	REV 7232	7340007535565
LOCQUIC	05972	PRIMER, SEALANT	OZ				
LOCQUICT	05972	SEALING COMPOUND	EA				
LOCTITE CV	05972	SEALING COMPOUND -BLUE, LIQUID, 6HR TACK FREE, 50 CC BOTTLE, GR CV	CC	3	6	REV 7275	8030000812330
LOCTITE GRADE A	05972	SEALING COMPOUND -SEALING COMPOUND LIQUID COLOR RED MIL-S-22473	CC	3	6	REV 7238	8030000812339
LOCTITE 84	05972	SEALING COMPOUND	CC				
LOCTITEC	05972	SEALING COMPOUND	CC				
LOCTITEGRADEE	05972	SEALING COMPOUND	CC				
LOCTITETYPEE	05972	SEALING COMPOUND	CC				
LPS-2	32861	CORROSION PREVENTIV -	OZ	4			8030008387789
LP378	81348	TUBING, NONMETALLIC -2 TYPE AND AGRADE AND 1 CLASS AND 1 FINISH, 375 YD RO	YD	3	0	REV 7271	8135007827464

Downloaded from http://www.everyspec.com

CONSUMABLE ITEMS PART 1

P/N	FSCM	NOMENCLATURE	UM	EC	SL	ADDITIONAL INFO	NSN
LP387	81348	PLASTIC SHEET -COLOR BLACK #27038 NDP TYPE, 361N WD 42 IN LG 062 IN TK	IN	3	0	36 IN WD 42 IN LG 062 IN TK TM 55-1500-345-23	9330002825640
LP410	81348	PLASTIC SHEET - 062 TK 48X24 INCH SHEET POLYHEXAMETHYLENE ADIPAMIDE COMP	SH	3	0	REV 7280	9330001438604
LP50	81348	PAD, SCOURING -L-P-0050 TY 2, CL2, EACH	EA	3	0	REV 7243	7920009343469
LS300	81348	TAPE, REFLECTIVE -TYPE 2 & CLASS 1 YELLOW, 50 YD LONG 1/2 IN WIDE ROLL	YD	3	0	50 YD LONG X 0 500 IN WI DE RO	9390001062465
LUBRI-BOND220	85932	LUBRICANT, SOLID FIL	OZ	1	H	REV 6230	9150007540064
LUBRIBONDA	85932	LUBRICANT, SOLID FIL OZ					
LUBRIPLATE630-2	73219	GREASE, GENERAL PURP -14 OZ CART, CORROSION, PRESSURE, OXIDATION, SALT WATER AND WEAR	OZ	3	6	REV 7275	9150009297946
MACDERMID SCRUB H	76071	CLEANING COMPOUND, P -100 GALLON DRUM	LB	1	0	REV 7157	6850010190665
MAGNUS 664-D	91838	CLEANING COMPOUND -	DR				
MARKSALOTRED	03042	MARKER,TUBE TYPE -1 DOZEN PER BOX	EA	3	0	REV 7157	7520009731062
METAL GLO 6	61102	CLEANING COMPOUND -GL					
METALSETA4	90414	ADHESIVE -6OZ KIT	OZ	3	4	REV 7233	8040009447292
MIL-A-175	81349	AMMONIUM NITRATE -MIL-A-175 CL1, 50 POUND BAG	LB	3	0	REV 7161	6810010584785
MIL-A-46050	81349	ADHESIVE -MIL-A-46050 TYPE1 CLASS 1,1 OZ PLASTIC BOTTLE	OZ	3	2	REV 7233	8040001429193
MIL-A-46050	81349	ADHESIVE -COLORLESS, 1 PINT BOTTLE W/SPREADER	PT	3	2	REV 7273	8040010909320
MIL-A-46050	81349	ADHESIVE -TY2, CL3, 1 OZ, BOTTLE	OZ	3	0	REV 7273	8040011400954
MIL-A-46106	81349	ADHESIVE -MIL-A-46106 TY1 CLEAR, 1 PT CAN	PT	3	0	REV 7161	8040010313170
MIL-A-46106	81349	ADHESIVE -6 OUNCE TUBE	OZ	3	4	REV 7218	8040009419984

Downloaded from http://www.everyspec.com

CONSUMABLE ITEMS PART 1

P/N	FSCM	NOMENCLATURE		UM	EC	SL	ADDITIONAL INFO	NSN
MIL-A-46106	81349	ADHESIVE	-5 OZ TUBE	OZ	3	4	5 OZ TU CONSUMABLE FOR TM 55-1520-238-23	8040008339563
MIL-A-46106	81349	ADHESIVE TUBE	-TYPE 1, WHITE, 3 OZ	OZ	3	4	REV 7273	8040008779872
MIL-A-46106	81349	ADHESIVE	-TY I 5 OZ TUBE	OZ	3	4	REV 7280	8040008779872
MIL-A-46106 TY 1, CLEAR 3 OZ TUBE	80244	ADHESIVE	-3 OZ TUBE, CLEAR	OZ	3	4	REV 7273	8040008430802
MIL-A-46106TYPE1-1PTCAN	81349	PRIMER, ADHESIVE	-TY1, 1 PTCN	QT	3	2		8040007019616
MIL-A-46146	81349	ADHESIVE	-12 OZ CARTRIDGE	OZ	3	2	REV 7243	8040001449774
MIL-A-46146	81349	ADHESIVE	-12 OZ CARTRIDGE	OZ	3	2	12 OZ CARTRIDGE CONSUMABLE FOR TM 55-1520-210-23-1	8040001182695
MIL-A-46146	81349	ADHESIVE TUBE	-TYPE 1, CLEAR, 30Z	OZ	3	2	REV 7273	8040010091562
MIL-A-46146	81349	ADHESIVE	-WHITE, 12 OZ CAN	OZ	3	2	REV 7274	8040009381535
MIL-A-46146	81349	ADHESIVE RUBBER PASTE FORM 12 OZ CARTRIDGE	-WHITE SILICONE	OZ	3	2	REV 7275	8040009381535
MIL-A-46146 TY1	80244	ADHESIVE SILICONE, PASTE FORM TY1, 3 OZ TUBE	-WHITE	OZ	3	2	REV 8006	8040001182695
MIL-A-8243	81349	DEICING-DEFROSTING	-5 GALLON CAN	GL	3	7	REV 7238	6850009010591
MIL-A-8243	81349	DEICING-DEFROSTING	-TYPE 1 ,55 GL DRUM	GL	3	7	REV 7253	6850005581248
MIL-A-8576	81349	ADHESIVE	-TYPE 1, 1 PINT KIT	OZ	3	2	REV 7261	8040002660815
MIL-A-8576	81349	ADHESIVE	-TY2, 1PT, KIT	EA	3	2	REV 8007	8040005261910
MIL-A-8623	81349	ADHESIVE	-	EA				
MIL-A-907	81349	ANTISEIZE COMPOUND	-2 5 LB CAN	LB	3	6	REV 7157	8030005975367
MIL-A-9117	81349	ADHESIVE	-1 QT CAN	QT	3	2	1 QT CN CONSUMABLE FOR TM 55-1520-210-23-1	8040002629060
MIL-A-9962	81349	MAT, ABRASIVE GRA	-MIL-A-9962, TY1, CL1,	SH	3	0	REV 7156	5350009675089
MIL-A-9962	81349	MAT, ABRASIVE AND GRADE B, 180 TO 240 GRIT	-TYPE 1 AND CLASS 1	SH	3	0	REV 6357, 7257	5350009675093

Downloaded from http://www.everyspec.com

CONSUMABLE ITEMS PART 1

P/N	FSCM	NOMENCLATURE	UM	EC	SL	ADDITIONAL INFO	NSN
MIL-B-121	81349	BARRIER MATERIAL, GR-MILB121, TY2, GRA, CL1, 600 FT PER ROLL	EA	3	0	REV 7156	8135002248885
MIL-B-121	81349	BARRIER MATERIAL, GR-TY1, GRA, CL B 4X300 FT RL COLOR RED	FT	3	0	REV 7225	8135005436574
MIL-B-121	81349	BARRIER MATERIAL, GR-TYPE 1 AND GRADE A AND CLASS 2, 100 YD ROLL	YD	3	0	REV 8007	8135007534661
MIL-B-131	81348	BARRIER MATERIAL, WA -	YD	1	0	REV 6231	8135002820565
MIL-B-131	81348	BARRIER MATERIAL, WA -	YD	1	0	REV 6231	8135002820565
MIL-B-16909	80244	ROUGE, ABRASIVE -TYPE 1, 1/4 LB STICK	LB	3	0	REV 7271	5350002235581
MIL-B-16909	81349	ROUGE, ABRASIVE -TYPE 1, 1/2 POUND EA	LB	3	0	REV 7273	5350002402213
MIL-B-22020	81349	BAG, PLASTIC -SIZE 6, 12 IN HIGH X 12 IN WIDE	EA	3	0	12 IN HIGH X 12 IN WIDE CONSUMABLE FOR TM 55-1520-210-23-1	8105000278485
MIL-B-23958	81349	BRUSH, CLEANING, AIRC -TYPE 3 AND STYLE 1, FIBER AND NYLON	EA	3	0	REV 7253	7920000514384
MIL-C-10578	81349	CORROSION REMOVING -TYPE 2, 5 GAL DRUM	GL	3	0	REV 7273	6850006561292
MIL-C-11029	81349	CITRIC ACID, ANHYDRO -50 LB DRUM	LB	3	0	REC 7229	6810001412942
MIL-C-11796	81349	CORROSION PREVENTIV -CLASS 3, 35 LB CAN	LB	3	7	REV 7271	8030002851570
MIL-C-11796	81349	CORROSION PREVENTIV -CLASS 1, 5 LB CAN	LB	3	7	REV 7271	8030002312354
MIL-C-12369	81349	CLOTH, BALLISTIC -CLASS 2, 48 IN WIDE COLOR NATURAL	SY	3	0	USED FOR REPAIR OF ARMOR SPALL SHIELD TM 55-1500-204-25/1	8305010253747
MIL-C-14460	81349	CORROSION REMOVING -500 LB DR TYPE 1	LB	3	0	REV 7209	6850005505565
MIL-C-16173	81349	CORROSION PREVENTIV -MIL-C-16173, GRADE 2, 1 GALLON CAN	GL	3	5	REV 7156	8030002441297
MILC16173	81349	CORROSION PREVENTIV -MIL-C-16173, GRADE 4	GL	3	5	5 GAL PAIL	8030005261605
MIL-C-16173	81349	CORROSION PREVENTIV -MIL-C-16173, GRADE 1, 1 GALLON CAN	GL	1	5	REV 7156	8030002312345
MIL-C-16173	81349	CORROSION PREVENTIV -MIL-C-16173 GRADE 2, 1 GL CAN	GL	3	5	REV 7239	8030002441297

Downloaded from http://www.everyspec.com

CONSUMABLE ITEMS PART 1

P/N	FSCM	NOMENCLATURE	UM	EC	SL	ADDITIONAL INFO	NSN
MIL-C-16173	81349	CORROSION PREVENTIV -MIL-C-16173 GRADE 4, 1 GL CAN	GL	3	5	REV 7240	8030000625866
MIL-C-16173	81349	CORROSION PREVENTIV -GRADE 4, 1 PT CAN	PT	3	5	REV 6357, 7257	8030009030931
MIL-C-16173	81349	CORROSION PREVENTIV -1 GR, COLD APPLICATION, 5 GAL CAN	GL	3	5	REV 7273	8030002441299
MIL-C-16173 GR1	80244	CORROSION PREVENTIV -	GL				
MIL-C-16555	81349	PLASTIC COATING COM -TYPE 1 5 GL PAIL	GL	3	4	REV 7261	8030002758093
MIL-C-19853	81349	CARBON REMOVING COM-5 GL CAN	GL	3	0	REV 7237	6850005437801
MIL-C-19853	81349	CARBON REMOVING COM -TYPE 1, 1 GL CAN	GL	3	0	REV 7253	6850007028451
MIL-C-22750	81349	EPOXY COATING KIT -MIL-C-22750, TY1, COLOR 37038 BLACK, 1 QT EPOXY & 1 QT ACTIVATOR	OT	3	4	REV 7162	8010010307254
MIL-C-22750	81349	EPOXY COATING KIT -MIL-C-22750, TY1, COLOR 37875 WHITE, 1 GL KIT	GL	1	4	REV 7232	8010010131039
MIL-C-22750	81349	EPOXY COATING KIT -TY 1 GRAY #36231, 1 QT KIT	QT	3	4	1 QT KIT TM 55-1500-345-23	8010010823060
MIL-C-24176	81349	SEALING COMPOUND -1 OT KIT TY2 PLASTIC, EPOXY RESIN, GRAY, PASTE, CATALYST INCLUDED	OZ	3	4	REV 7275	8030006708553
MIL-C-25107	81349	CARBON REMOVING COM-55 GALLON DRUM	GL	3	0	7211REV	6850002854321
MIL-C-25769	81349	CLEANING COMPOUND, A -AIRCRAFT SURFACE, 55 GAL DRUM	GL	3	0	REV 7273	6850009350995
MIL-C-27251	81349	CLEANING COMPOUND, A -1 GL CAN	GL	3	0	REV 7254	6850006827533
MIL-C-3133	81349	RUBBER SHEET, CELLUL -MIL-STD-670 TY S CL SC STYLE E GR SCE3L, SHEET	SH	3	0	REV 7240	9320011542225
MIL-C-38334	81349	CLEANING COMPOUND, A -MIL-C-38334, TY1 CL1, 5 GALLONS	GL	3	H	REV 7159	6850005272426
MIL-C-43616	80244	CLEANING COMPOUND,A -MIL-C-43616 CL 2, 5 GL PAIL	GL	3	0	REV 7239	6850001449816
MIL-C-43616	81349	CLEANING COMPOUND, A -MIL-C-43616 CLASS 2, 15 GL DRUM	GL	3	0	REV 7240	6850001805942

Downloaded from http://www.everyspec.com

CONSUMABLE ITEMS PART 1

P/N	FSCM	NOMENCLATURE	UM	EC	SL	ADDITIONAL INFO	NSN
MIL-C-43616	81349	CLEANING COMPOUND, A -CLASS 1,55 GL DRUM	GL	3	0	REV 7254	6850010457931
MIL-C-43616	81349	CLEANING COMPOUND, A -CLASS 1A, 16 OZ AEROSOL CAN	OZ	3	6	REV 6232, 7254	6850000055305
MIL-C46156	81349	CORROSION REMOVING -TYPE 1,425 LB DRUM	LB	3	0	425 LB DR CONSUMABLE FOR TM 55-1520-210-23-1	6850009355853
MIL-C-46168	81349	POLYURETHANE COATIN -MIL-C-46168, A/C BLACK #37038, 1 GALLON CAN	GL	3	4	REV 7161	8010011462646
MIL-C-46168	81349	POLYURETHANE COATIN -COLOR NO 33531 (SAND), 1 GL CAN, KIT	GL	1	4	REV 7232	8010011316255
MIL-C-46168	81349	POLYURETHANE COATIN -MIL-C-46168 TY1 AIRCRAFT GREEN 1 GAL COMPA 1 QT COMP B KIT	GL	1	4	REV 7232	8010011316255
MIL-C-46168	81349	POLYURETHANE COATIN -MIL-C-46168 TY 1 GRAY #36231, KIT 1 GL COMPONENT A	GL	3	4	REV 6357, 7252	8010011462649
MIL-C-46168	81349	POLYURETHANE COATIN -MIL-C-46168 TY 1 WHITE #37875, KIT 1 GL COMPONENT A	GL	3	4	REV 7252	8010011316262
MIL-C-46168	81349	POLYURETHANE COATIN -M'L-C-46188 TYPE 1 A/C RED #31136, 1 GL COMPONENT A	GL	3	4	REV 7252	8010011449873
MIL-C-46168	81349	POLYURETHANE COATIN -OLIVE DRAB #34087, 1 GAL COMP A AND 1 QT COMP B	GL	3	4	1 GAL COMP A AND 1 QT COMP B KIT TM 55-1500-345-23	8010011316262
MIL-C-46168	81349	POLYURETHANE COATIN -TY 1OLIVE DRAB #34087, 4 GAL COMP A AND 1 GAL COMP B	GL	3	4	4 GAL COMP AAND 1 GAL COMP B TM 55-1500-345-23	8010011449875
MIL-C-46168	81349	POLYURETHANE COATIN -TY 1 BLACK #37038, 4 GAL COMP AAND 1 GAL COMP B	GL	3	4	4 GAL COMP A AND 1 GAL COMP B TM 55-1500-345-23	8010011449879
MIL-C-46168	81349	POLYURETHANE COATIN -TY 1 BLACK #37038, 1 QT COMP A AND 1/2 PT COMP B	QT	3	4	1 QT COMP AAND 1/2 PT COMP B TM 55-1500-345-23	8010011449885
MIL-C-46168	81349	POLYURETHANECOATIN -AIRCRAFT GREEN, 55 GAL DRUM, COMP A	GL	3	4	55 GAL DRUM COMP A TM 55-1500-345-23	8010011299348
MIL-C-46168	81349	POLYURETHANE COATIN -TY 1 AIRCRAFT GREEN, 4 GAL COMP A AND 1 GAL OF COMP B	GL	3	4	4 GAL COMP A AND 1 GAL COMP B KIT TM 55-1500-34523	8010011316262
MIL-C-46168	81349	POLYURETHANE COATIN -TY 1 AIRCRAFT GREEN, 1 QT COMP A AND 1/2 PT COMP B	QT	3	4	1 QT COMP AAND 1/2 PT COMP B TM 55-1500-345-23	8010011412420

Downloaded from http://www.everyspec.com

CONSUMABLE ITEMS PART 1

P/N	FSCM	NOMENCLATURE	UM	EC	SL	ADDITIONAL INFO	NSN
MIL-C-46168	81349	POLYLRETHANE COATIN -AIRCRAFT GREY EXTERIOR, 1 GAL COMP AAND 1 QT COMP B	GL	3	4	1 GAL COMP A AND 1 QT COMP B TM 55-1500-345-23	8010011278908
MIL-C-46168	81349	POLYURETHANE COATIN -TY1 AIRCRAFT GREY EXTERIOR, 4 GAL COMP AAND 1 GAL COMP B	GL	3	4	4 GALCOMP A AND 1 GAL COMP B TM 55-1500-34523	8010011449876
MIL-C-46168	81349	POLYURETHANE COATIN -TY 1 RED #31136, 4 GAL COMP A AND 1 GAL COMP B	GL	3	4	4GAL COMP A AND 1 GAL COMP B TM 55-1500-345-23	8010011449878
MIL-C-46168	81349	POLYURETHANE COATIN -TY 1 AIRCRAFT GRAY 1 QT COMP AAND 1/2 PT COMP B	QT	3	4	1 QT COMP A AND 1/2 PT COMP B TM 55-1500-345-23	8010011449882
MIL-C-46168	81349	POLYURETHANE COATIN -TY 1 RED #31136, 1 QT COMP A AND 1/2 PT COMP B	QT	3	4	1 QT COMP A AND 1/2 PT COMP B TM 55-1500-345-23	8010011449884
MIL-C-46168	81349	POLYURETHANE COATIN -TY 1 WHITE #37875, 4 GAL COMP A AND 1 GAL COMP B	GL	3	4	4 GAL COMP A AND 1 GAL COMP B TM 55-1500-345-23	8010011449877
MIL-C-46168	81349	POLYURETHANE COATIN -TY 1 WHITE #37875, 1 QT COMP A AND 1/2 PT COMP B	QT	3	4	1 QT COMP A AND 1/2 PT COMP B TM 55-1500-345-23	8010011449883
MIL-C-46168	81349	POLYURETHANE COATIN -COMP B FOR ALL 55 GAL DRUMS	GL	3	4	COMP B FOR ALL 55 GAL DRUMS TM 55-1500-345-23	8010011320205
MIL-C-46168	81349	POLYURETHANE COATIN -TY 1 BLUE #35044, 4 GAL COMP A AND 1 GAL COMP B	GL	3	4	4 GAL COMP A AND 1 GAL COMP B TM 55-1500-345-23	8010011449880
MIL-C46168	81349	POLYURETHANE COATIN -TY1 BLUE 35044, 1 QT COMP AAND 1/2 COMP B	QT	3	4	1 QT COMP AAND 1/2 COMP B TM 55-1500-345-23	8010011449887
MIL-C46168	81349	POLYURETHANE COATIN -TY1 BLUE #35044, 1 GAL COMP A AND 1 QT COMP B	GL	3	4	1 GAL COMP AAND 1 QT COMP B TM 55-1500-345-23	8010011462648
MIL-C-46168	81349	POLYURETHANE, COAT -TY1, COLOR #33538, YELLOW, 1 QT COMP AAND 1/2 PT COMP B, KIT	QT	3	4	REV 7280	
MIL-C-46168	81349	POLYURETHANE, COAT -TY1, COLOR #33538, YELLOW, GAL COMP A AND 1 QT COMP B, KIT	GL	3	4	REV 7280	
MIL-C-47113	81349	SILICONE COMPOUND -1 PT CAN	PT	3	M	REV 7233	6850001094362
MIL-C-5040	81349	CORD, FIBROUS -TYPE 3, 700 YD SL	FT	3	0	REV 7271	4020002402146
MIL-C-5501/3	81349	CAP, PROTECTIVE DUST -	EA				
MIL-C-5501/7	81349	CAP-PLUG, PROTECTIVE -	EA				

Downloaded from http://www.everyspec.com

CONSUMABLE ITEMS PART 1

P/N	FSCM	NOMENCLATURE	UM	EC	SL	ADDITIONAL INFO	NSN
MIL-C-5545	81349	CORROSION PREVENTIV -120 LB DRUM	LB	3	7	REV 7271	6850002744169
MIL-C-6529	81349	CORROSION PREVENTIV -TYPE 1, 5 GL CAN	GL	3	7	REV 7253	6850002812031
MIL-C-6529	81349	CORROSION PREVEN -TYPE 3, 5 GAL CAN	GL	3	7	5 GL CN CONSUMABLE FOR TM 55-1520-210-23-1	
MIL-C-6799	81349	PLASTIC COATING COM -TYPE 2 AND CLASS 5, 5 GAL CAN	GL	3	5	5 GL CN CONSUMABLE FOR TM 55-1500-204-25/1	8030002970189
MIL-C-6864	81349	CLEANING COMPOUND S -55 GAL DRUM	GL	3	0	55 GL DR CONSUMABLE FOR TM 55-1520-210-23-1	6850005513694
MIL-C-7637	81349	CLOTH, FIBERGLASS -	YD	3	0		
MIL-C-81302	81349	CLEANING COMPOUND,S -MIL-C-81302 TYPE IIA, 16 OZ CAN AEROSOL	OZ	3	0	REV 7157	6850001053084
MIL-C-81302	81349	CLEANING COMPOUND, -TYPE 1,5 GL CAN	GL	3	0	REV 7254	6850009845853
MIL-C-81302	81349	CLEANING COMPOUND, S -TYPE 2,55 GL DRUM	GL	3	0	REV 7254	6850006815688
MIL-C-81302	81349	CLEANING COMPOUND, S -TYPE 2, 11 LB CAN	LB	3	6	RE 7254	6850003190834
MIL-C-81302	81349	CLEANING COMPOUND, S -TYPE 2,6 OZ BOTTLE	OZ	3	0	6 OZ BT CONSUMABLE FOR TM 55-1520-210-23-1	6850009351082
MIL-C-81309	81349	CORROSION PREVENTIV -TYPE 2 CLASS 2, 16 OZ AEROSOL CAN	OZ	3	4	REV 6357, 7257	8030009381947
MIL-C-81706	81349	CORROSION RESISTANT -CLASS 3 AND FORM 2 AND METHOD B	LB	3	6	REV 7257	8030010182838
MIL-C-81706	81349	CORROSION RESISTANT -TYPE 1 AND GRADE B, CLASS 1 OR 2, 1 PT CAN	PT	3	4	REV 7257	8030001429272
MIL-C-81706	81349	CORROSION RESISTANT -1ACLASSAND2FORM AND METHOD B, 2 LB PACKAGE	LB	3	6	REV 8007	8030008113723
MIL-C-81706	81349	CORROSION RESISTANT -3 FORM, B METHOD, 1 PINT CAN	PT	3	6	REV 7273	8030010182838
MIL-C-81706	81349	CORROSION RESISTANT -CL A, FORM 2, METHOD B, 4 OZ JAR	OZ	3	6	REV 7274	8030010182838

Downloaded from http://www.everyspec.com

CONSUMABLE ITEMS PART 1

P/N	FSCM	NOMENCLATURE	UM	EC	SL	ADDITIONAL INFO	NSN
MIL-C-8188	81349	CORROSION PREVEN -5 GAL CAN	GL	3	7	5 GL CN CONSUMABLE FOR TM 55-1520-210-23-1	6850002732395
MIL-C-81964	81349	CLEANING COMPOUND, A -MIL-C-81964 TY1	OZ	3	6	16 OUNCE AEROSOL CAN	6850001487161
MIL-C-83231	81349	COATING KIT, RAIN ER-TY II CL A BLACK, 1 GAL BASE AND REQ AMT OF ACTIVATOR	GL	3	4	1 GAL BASE AND REQ AMT OF ACTIVATOR TM 55-1500-345-23	8010004591756
MIL-C-83286	81349	POLYURETHANE COATIN -1 QT KIT	QT	3	6	REV 6357, REV 7237	8010001818276
MIL-C-83286	81349	POLYURETHANE COATIN -TY 1, BLACK #37038, 1 QT KIT	QT	3	4	REV 7275	8010004825671
MIL-C-83445	81349	COATING KIT, RAIN ER -CL 1,1 GAL KIT	GL	3	4	1 GAL KIT TM 55-1500-345-23	8010011322976
MIL-C-83957	81349	PAD, SCOURING -TYPE 1	SH	3	0	REV 6357, 7254	7920001516120
MIL-C-85043	81349	CLOTH, CLEANING -MIL-C-85043, TY2, 10 LB BOX	EA	3	0	REV 7156	7920000449281
MIL-C-85043	81349	CLOTH, CLEANING -MIL-C-85043, TY2, 10 LB BOX	EA	3	0	REV 7212	7920000449281
MIL-C-85054	81349	CORROSION PREVENTIV -TYPE 1, 16 OZ AEROSOLCAN	OZ	3	4	REV 8034	8030010411596
MIL-C-8514	81349	COATING COMPOUND, ME-1 GAL KIT	GL	3	4	1 GAL KIT TM 55-1500-345-23	8030010156104
MIL-C-8514	81349	COATING COMPOUND, ME-KIT, ONE 4 GAL AND ONE 1 GAL BOTTLE	EA	3	4	REV 7275	8030000822425
MIL-C-85704	81349	CLEANING COMPOUND,E -5 GAL CAN, USED IN INSTALLED ENGS DURING STARTER OPERATION	GL	3	0	REV 7275	6850001817594
MIL-C-87936	81349	CLEANING COMPOUND, A -5 GL CAN	GL	3	0	TO EST. REPL FOR 6850-00-935-0996	6850011847453
MIL-C-87936	81349	CLEANING COMPOUND, A -55 GL DRUM, TYPE 1	GL	3	0	6850011843182	
MIL-C-9084	81349	CLOTH, SATIN -TYPE VIII CL 2, WIDTH 38 IN COLOR NATURAL TRADE DESIGN, 181	EA	3	0	REV 7225	8305010072672
MIL-C-9084	81349	CLOTH, SATIN -TY 7, CL 1, COLOR NATLRAL 38 IN W1DE	FT	3	0	REV 7274	8305005300109
MIL-D-16651	81349	SEALING COMPOUND -50 Z TUBE	OZ	3	4	50 Z TUBE TM 55-1500-345-23	8030002643886

Downloaded from http://www.everyspec.com

CONSUMABLE ITEMS PART 1

P/N	FSCM	NOMENCLATURE	UM	EC	SL	ADDITIONAL INFO	NSN
MIL-D-16791	81349	DETERGENT, GENERAL P -TYPE 1, 1 GL CAN	GL	3	0	REV 6357, 7257	7930002829699
MIL-D-16791	81349	DETERGENT, GENERAL P -TYPE 1, 5 GL PAIL	GL	3	7	REV 6357, 7257	7930009856911
MIL-D-3464	81349	DESICCANT, ACTIVA -150 EACH PER DRUM	EA	3	0	REV 7211	6850002646572
MIL-D-3464	81349	DESICCANT, ACTIVA -5 GL CAN	EA	3	0	REV 7237	6850002646573
MIL-D-3464	81349	DESICCANT, ACTIVA -MIL-D-3464 300 BAGS PER DRUM, TYPE 1	EA	3	0	REV 7239	6850002646571
MIL-D-3464	81349	DESICCANT, ACTIVATED -TYPE 1, 5 BAGS PER CN	EA	3	0	REV 7271	6850009991094
MIL-D-6998	81349	DICHLOROMETHANE, TEC-GR B, 5 GAL CAN	GL	3	0	5 GAL CAN TM 55-1500-345-23	6810002440290
MIL-E-22118	81349	ENAMEL -MIL-E-22118 RED, 1 PT CAN	PT	3	6	REV 7238	8010008238046
MIL-E-7729	81349	ENAMEL -1 QT CAN	QT	3	6	REV 6357, REV 7237	8010002982302
MIL-F-24385	81349	FOAM LIOUID,FIRE EX -FOAM LIQUID, FIRE EXT 5 GAL CAN	GL	3	0	REV 7280	4210010568343
MIL-F-46895	81349	PLASTIC SHEET -MIL-F46895 2MIL THK	SH	3	7	REV 7161	
MIL-G-18709	81349	GREASE, BALL AND ROL -5 LB CAN	LB	3	7	REV 7273	9150001491593
MIL-G-21164	81349	GREASE, MOLYBDENUM D-1 750 LB CAN	LB	3	6	REV 7223	9150007542595
MIL-G-23827	81349	GREASE, AIRCRAFT AND -1 75 LB CAN	LB	3	6	REV 6223, REV 7233	9150009857246
MIL-G-23827	81349	GREASE, AIRCRAFT AND -8 OZ TUBE	OZ	3	6	REV 6233, REV 7237	9150009857245
MIL-G-23827	81349	GREASE, AIRCRAFTAND -CORROSIVE RESISTIVE, 6 5 LB CAN	LB	3	6	REV 7240	9150009857247
MIL-G-23827	81349	GREASE,AIRCRAFTAND -CORROSIVE RESISTIVE, 35 LB CAN	LB	3	6	REV 7240	9150009857248
MIL-G-24139	81349	GREASE, GENERAL PURP-1 75 LB CAN	OZ	3	6	REV 8035	9150001806381
MIL-G-25537	81349	GREASE, AIRCRAFT -CORROSION RESISTIVE, 1 75 LB CAN	LB	3	6	REV 7240	9150006169020
MIL-G-25537	81349	GREASE, AIRCRAFT -14 OZ CARTRIDGE	EA	3	6	REV 8034	9150004780055

Downloaded from http://www.everyspec.com

CONSUMABLE ITEMS PART 1

P/N	FSCM	NOMENCLATURE		UM	EC	SL	ADDITIONAL INFO	NSN
MIL-3866	81349	GLOVES, MEN'S	-COTTON, WHITE, MED, TY1	PR	3	0	REV 8034	8415002688353
MILG4343	81349	GREASE, AIRCRAFT	-	LB	3	6	1 750 LB CAN	9150002698255
MILG4343	81349	GREASE, AIRCRAFT	-2 OZ TUBE	OZ	3	6	REV 7237	9150001199291
MIL-G6003	81349	GREASE, RIFLE MINERAL OIL, CORROSION AND WATER RESISTANT, 5	-GELLING AGENT AND	LB	3	7	REV 7275	9150000578976
MIL-6886	81349	GREASE, AIRCRAFTAND 8 OZ TUBE	-MILG46886 TYPE 1,	OZ	3	7	REV 7243	9150001450161
MILG46886	81349	GREASE, AIRCRAFT AND 11, 8 OZ TUBE	-MIL-66886 TYPE	OZ	3	7	REV 7243	9150005844299
MILG81322	81349	GREASE, AIRCRAFT	-5 LB CAN	LB	3	6	REV 7157	9150001450268
MILG81322	81349	GREASE, AIRCRAFT	-1 POUND CAN	LB	3	6	REV 7240	9150009448953
MILG81827	81349	GREASE, AIRCRAFT	-1 75 LB CAN	LB	3	7	REV 7240	9150004089635
MILG-81937	81349	GREASE, INSTRUMENT	-40Z TUBE	OZ	3	6	REV 7257	
MIL-H-5606	81349	HYDRAULIC FLUID, PET	-1 QTCAN	QT	3	6	REV 7157	9150002526383
MIL-H-5606	81349	HYDRAULIC FLUID, PET	-1 GLCAN	GL	3	6	REV 7240	9150002234134
MIL-H-5606	81349	HYDRAULIC FLUID, PET	-RED, 1 QTCAN	QT	3	6	REV 7275	9150002526383
		DELETED						
MIL-H-83282	81349	HYDRAULIC FLUID,FIR	-1 QUART CAN	QT	3	6	REV 7161	9150001497431
MIL-H-83282	81349	HYDRAULIC FLUID, FIR	-1 GL CAN	GL	3	6	REV 7240	9150001497432
MIL-H83282	81349	HYDRAULIC FLUID, FIR	-55 GAL DRUM	GL	3	6		9150001806290
MIL-1-15126	81349	TAPE, INSULATION, ELE ELEC WIRES FOR NIGHT VISION GOGGLES	-ROLL, FOR WRAPING	RO	1	6	REV 7232	5970001379501
MIL-1-18746	81349	TAPE, INSULATION WIDE, 108 FT, ROLL	-ELECTRICAL, 1 IN	FT	3	0	REV 7275	
MIL-1-18746	81349	TAPE, INSULATION LONG ROLL	-1 IN WIDE X 108 FT	FT	3	6	REV 7280	

Downloaded from http://www.everyspec.com

CONSUMABLE ITEMS PART 1

P/N	FSCM	NOMENCLATURE	UM	EC	SL	ADDITIONAL INFO	NSN
MIL-I-23594	81349	TAPE INSULATION -ELECTRICAL, TY 1, 1/2 IN WIDE, 108 FT ROLL	FT	3	5	REV 7275	
MIL-I-23594	81349	TAPE, INSULATION -TY1, 1 IN WIDE X 108 FT LONG ROLL	FT	3	5	REV 7280	
MIL-I-24391	81349	TAPE, INSULATION, ELE -MIL-I-24391 3/4 IN WIDE AND 1296 IN LONG	FT	3	6	REV 6357, 7239	5970004194291
MIL-1-24391	81349	TAPE, INSULATION ELE -60 YD LONG X 3/4 IN WIDE ROLL	YD	3	6	60 YD LONG X 0 750 IN WI DE RO CONSUMABLE FOR TM 55-1520-210-23-1	5970004194291
MIL-I-25135	81349	INSPECTION PENETRAN -MIL-I-25135 GROUP VII, KIT, 3 CAN OF 12 OZ REMOVER AND	EA	3	6	REV 7243	6850007822740
MIL-I-25135	81349	INSPECTION PENETRAN -GROUP 3, 30 LB DRUM TM 55-1520-210-23-1	LB	3	6	30 LB DR CONSUMABLE FOR	6850007822725
MIL-I-46058	81349	INSULATING COMPOUND -MIL-I-46058 TY UR, 1 PINT KIT	PT	3	H	REV 7198	5970001810190
MIL-I-46058	81349	INSULATING COMPOUND -MIL-146058 TYPE XY, 1 POUND CAN	LB	3	6	REV 7219	5970011447333
MIL-I-46058 TYAR	81349	INSULATION COMPOUND -	LB	3	F	REV 8034	5970010297961
MIL-1-46852	81349	TAPE, INSULATION, ELE -36 FOOT ROLL	FT	3	5	REV 7217	5970009559976
MIL-146852	81349	TAPE, INSULATION, ELE -36 FT ROLL	FT	3	5	REV 7257	5970009494846
MIL-I-6903	80244	INK, MARKING, PARACHU -TYPE 4 BLUE, 16 OZ CAN	OZ	3	4	16 OZ CN CONSUMABLE FOR TM 55-1520-210-23-1	7510002865362
MIL-I-85470	81349	INHIBITOR, ICING, FUE -55 GL DRUM	GL	3	5	REV 6357, REV 7237	6850010895514
MIL-L-17672	81349	HYDRAULIC FLUID, PET -MILITARY 2135-T-H SYMBOL, 55 GAL DRUM	GL	3	7	REV 7271	9150005842560
MIL-L-19537	81349	LACQUER -MIL-L-19537 RED, 1 QT CAN	QT	3	6	REV 7239	8010005517934
MIL-L-19537	81349	LACQUER -COLOR CLEAR, 1 GL CAN	GL	3	6	REV 7273	8010005271507

Downloaded from http://www.everyspec.com

CONSUMABLE ITEMS PART 1

P/N	FSCM	NOMENCLATURE		UM	EC	SL	ADDITIONAL INFO	NSN
MIL-L-19538	81349	LACQUER	-1 QT CAN	QT	3	6	REV 8034	8010000822479
MIL-L-19538	81349	LACQUER	-BLACK #37038, 1 GAL CAN	GL	3	6	1 GAL CAN TM 55-1500-345-23	8010005272884
MIL-L-2104	81349	LUBRICATING OIL, ENG 1 QT CAN	-MIL-L-2104 30 GRADE,	OT	3	6	REV 7233	9150001866681
MIL-L-2104	81349	LUBRICATING OIL, ENG	-GRADE 30,5 GAL CAN	GL	3	6	REV 7271	9150001889858
MIL-L-2104	81349	LUBRICATING OIL, ENG DRUM	-GRADE 30W, 55 GAL	GL	3	6	VISCOSITY-9 30 MIN 100 DEG C & 12 50 MAX 100 DEG C	9150001889858
MIL-L-2104	81349	LUBRICATING OIL ENG	-10W GRADE, 1 QT CAN	QT	3	6	VISCOSITY-5 60 MIN 100 DEG C & 7 40 MAX 100 DEG C	9150001889858
MIL-L-2105	81349	LUBRICATING OIL, GEA CAN	-GRADE 80W-90, 1 QT	OT	3	6	REV 7274	9150010355392
MIL-L-21260	81349	LUBRICATING OIL, 5 GAL CAN	-1OW GRADE AND TYPE 1.	GL	3	6	REV 7271	9150001113199
MIL-L-21260	81349	LUBRICATING OIL, ENG	-GRADE 30, 1 PT CAN	PT	3	6	REV 7274	9150001110201
MIL-L-22851	81349	LUBRICATING OIL, AIR CORROSIVE RESISTIVE, 55 GL DRUM	-MIL-L-22851 TY II	GL	3	7	REV 7246	9150007534937
MIL-L-23398	81349	LUBRICANT, SOLID FIL 12 OZ AEROSOL CAN	-MIL-L-23398 TY II,	OZ	3	H	REV 8034	9150007540064
MIL-L-23398	81349	LUBRICANT, SOLID FIL	-TYPE 1, 1 OT CAN	QT	3	H	REV 7280	9150009547422
MIL-L-23699	81349	LUBRICATING OIL, AIR	-1 QT CAN	QT	3	7	REV 8034	9150009857099
MIL-L-25567	81349	LEAK TEST COMPOUND 4 OUNCE BOTTLE	-MIL-L-25567 TY2	OZ	3	0		6850006211819
MIL-L-25567	81349	LEAK TEST COMPOUND	-TYPE 1, 4 OZ BOTTLE	OZ	3	0	REV 7280	6850006211820
MIL-L-46146	81349	ADHESIVE CARTRIDGE	-GRAY, 12 OZ	OZ	3	2	REV 7273	8040001449774
MIL-L-46159	81349	LACQUER CAN	-TY 1 BLACK, 1 GAL	GL	3	6	1 GAL CAN TM 55-1500-345-23	8010010429438

Downloaded from http://www.everyspec.com

CONSUMABLE ITEMS PART 1

P/N	FSCM	NOMENCLATURE		UM	EC	SL	ADDITIONAL INFO	NSN
MIL-L-46159	81349	LACQUER 24087, 5 GALLON CAN	-SEMI-GLOSS, GREEN,	GL	3	6	REV 7273	
MIL-L-46159	81349	LACQUER PINT SPRAY CAN	-TYPE 2, OLIVE DRAB, 1	QT	3	0	REV 7273	
MIL-L-46159	81349	LACQUER	-OLIVE DRAB, 1 QT CAN	QT	3	0	REV 7275	8010012111107
MIL-L-46159	81349	LACQUER	-ACFT GREEN, 1 GL CAN	GL	3	6	REV 8034	8010010338917
MIL-L-5024	81349	LUBRICANT, INNER TUB	-10 POUND BOX	LB	3	0	REV 7161	2640002646642
MIL-L-6082	81349	LUBRICATING OIL, AIR	-1 QT CAN	QT	3	0	REV 7271	9150010079134
MIL-L-6085	81349	LUBRICATING OIL, INS CAN	-INSTRUMENT OIL, 1QT	QT	3	6	REV 7274	9150002234129
MIL-L-6086	81349	LUBRICATING OIL,	-GRADE L, 1 GAL CAN	GL	3	7	REV 7271	9150002659417
MIL-L-7808	81349	LUBRICATING OIL,	-1 QT CAN	QT	3	7	REV 7161	9150007822627
MIL-L-7808	81349	LUBRICATING OIL, AIR	-1 GL CAN	GL	3	7	REV 7237	9150002704057
MIL-L-7870	81349	LUBRICATING OIL,	-40Z CAN	OZ	3	7	REV 7271	9150005421430
MIL-L-81352	81349	LACQUER	-MIL-L-81352 GRAY	GL	3	6	1 GL CAN	8010009357066
MIL-L-81352	81349	LACQUER WHITE, COLOR 17875, COMPOSITION L	-MIL-L-81352	GL	3	6	REV 7238	8010009356608
MIL-L-83795	81349	LAYOUT DYE TM 55-1520-210-23-1	-1 PT CAN	OZ	3	0	1 PT CN CONSUMABLE FOR	6850006649067
MIL-L-8937	81349	LUBRICANT, SOLID FIL	-FORM 1,1 PT CAN	PT	3	H	REV 7273	9150008345608
MIL-M-7866	81349	MOLYBDENUM DISULFID DISULFIDE, TECHNICAL, 1 LB CAN	-MIL-M-7866, MOLYBDENUM,	LB	3	7	REV 7156	6810002646715
MIL-P-15035	81349	PLASTIC SHEET 38 IN WIDE, 48 IN LONG	-FMB TYPE, 1 IN THK,	SH	3	0	REV 7273	9330005858678
MIL-P-15037	81349	INSULATION SHEET AND 3 FT LONG AND 015 IN THICKNESS, SHEET	-MIL-P-15037 36 IN WIDE	SH	3	0	REV 7239	5970001188838

Downloaded from http://www.everyspec.com

CONSUMABLE ITEMS PART 1

P/N	FSCM	NOMENCLATURE		UM	EC	SL	ADDITIONAL INFO	NSN
MIL-P-17667	81349	PAPER, WRAPPING, CHEM AND 30 IN WIDE	-TYPE 1, 600 FT ROLL	FT	3	0	REV 7261	8135005581242
MIL-P-21600	81349	COATING COMPOUND F CAN	-FLUORESCENT, 1 GAL	GL	3	6	1 GAL CN TM 55-1500-345-23	8010000822421
MIL-P-23377	81349	PRIMER COATING	-MIL-P-23377 TY2	GL	3	4	KIT	8010000822450
MIL-P-23377	81349	PRIMER COATING KIT TWO 5 GL PAILS	-MIL-P-23377 TY 1,	GL	3	4	REV 7243	8010000822477
MIL-P-23377	81349	PRIMER COATING	-TYPE 1, 1 PT KIT	PT	3	4	REV 6357, 7257	8010001429279
MIL-P-23377	81349	EPOXY PRIMER COATIN TM 55-1520-210-23-1	-TYPE 1, 8 OZ KIT	OZ	3	4	8 OZ KT CONSUMABLE FOR	8010002294813
MIL-P-26514	81349	CUSHIONING MATERIAL IN WIDE BY 1.5 IN THICKNESS SHEET	-77 IN LONG AND 30	SH	3	0	REV 7238	8135001817456
MIL-P-27401	81349	PROPELLANT PRESSURI BULK ISSUE	-GRADE A, TYPE 1,	CF	3	0	REV 7273	9135008238115
MIL-P-52192	81349	PRIMER COATING GALLON ADHESIVE AND 1 QUART CATALYST KIT	-MIL-P-52192 CPL, 1	OZ	3	6	REV 7157	8010000821714
MIL-P-53022	81349	EPOXY, PRIMER COAT PT PART B KIT	-1 QT PART A AND 1/2	QT	3	4		
MIL-P-53030	81349	PRIMER COATING PT PART B KIT	-1 QT PART A AND 1/2	QT	3	4		8010011930519
MIL-P-5425	81349	PLASTIC SHEET 0.187 IN THICK	-A FINISH, 48 X 38 IN	SH	3	0	REV 7271	9330004833266
MIL-P-6888	81349	POLISH, METAL	-TYPE 1, 1 GL CAN	GL	3	6	REV 6232, 7254	7930002671224
MIL-P-7962	81349	PRIMER COATING CAN AEROSOL	-MIL-P-7962 12 OZ	OZ	3	6	REV 7238	8010005842426
MIL-R-25134	81349	REMOVER, PAINT	-1 GAL CAN	GL	3	2	1 CAN TM 55-1500-345-23	8010008152970
MIL-R46082	81349	SEALING COMPOUND BOTTLE	-TYPE 2,250 000 CC	CC	3	5	REV 7261	8030001817529
MIL-R46082	81349	SEALING COMPOUND	-TY 1 80Z BOTTLE	OZ	3	5	REV 7280	8030008918358
MIL-R-46082 TY1	80244	SEALING COMPOUND	-	BT				

Downloaded from http://www.everyspec.com

CONSUMABLE ITEMS PART 1

P/N	FSCM	NOMENCLATURE	UM	EC	SL	ADDITIONAL INFO	NSN
MIL-R46082 TY3	81349	SEALING COMPOUND -50 CC BOTTLE	CC	3	5	REV 7161	8030001817603
MIL-R-5031	81349	ROD, WELDING -0 062 OD 36 IN LONG CL 5 STEEL FILLER OXYACETYLENE	LB	3	0	REV 7280	3439002460575
MIL-R-6130	81349	RUBBER SHEET, CELLUL -MIL-R-6130 TYPE 2, GRADE A, CONDITION MEDIUM, 36 IN WIDE AND	SH	3	0	REV 7237	9320010241549
MIL-R-6130	81349	RUBBER SHEET, CELLUL -GR A,TY 2, COND SOFT, 125 THK, 36X36 IN SH	SH	3	0	REV 7275	9320008144583
MIL-R-6130	81349	RUBBER SHEET, CELLUL -TY2GRACOND MEDIUM 50 TK 36 X 36 IN SHEET	SH	3	0	REV 7280	9320006183180
MIL-R-81294	81349	REMOVER, PAINT -NONFLAMMABLE, ORGANIC REMOVER FOR EPOXY AND POLYURETHANE PAINT	GL	3	2	REV 7156	8010010880105
MIL-R-81294	81349	REMOVER, PAINT -MIL-R-81294 TY 1, 5 GL CAN	GL	3	4	REV 7243	8010009261488
MIL-R-81294	81349	REMOVER, PAINT -TYPE 1, 55 GL DRUM	GL	3	4	REV 7257	8010009261489
MIL-R-81294	81349	REMOVER, PAINT -TYPE 1, 1 PT CAN	PT	3	4	REV 7257	8010001429273
MIL-R-81294	81349	REMOVER, PAINT -TYPE 1, 1 GALLON CAN	GL	3	4	REV 8034	8010001817568
MIL-R-81294 TY1	81349	REMOVER, PAINT -NONFLAMMABLE, ORGANIC REMOVER FOR EPOXY AND POLYURETHANE PAINT	GL	3	4		8010009261488
MIL-R83936	81349	REMOVER, PAINT -55 GALLON DRUM	GL	3	2	REV 6224, REV 7162	8010010401059
MIL-R-9300 TY 1. GRO, LIQUID	81349	RESIN, EPOXY, LOW-PR -MIL-R-9300 TY1 GRO LIQUID, 1 GALLON CAN	GL	3	0	REV 8345, REV 7161	
MIL-S-11030 TY1	81349	SEALING COMPOUND -SEMISOLID, 1 PT CAN	OZ	3	4	REV 7275	8030002758114
MILS22473	81349	PRIMER, SEALING COM -6 OUNCE CAN	OZ	3	5	REV 7161	8030001818372
MIL-S-22473	81349	SEALING COMPOUND -50 CUBIC CENTIMETER BOTTLE	CC	3	5	REV 7162	8030000812325
MIL-S-22473	81349	PRIMER SEALING COM -MIL-S-22473 GRADE N AND FORM R, 1 GL CAN	GL	3	5	REV 7239	8030001818372
MIL-S-22473	80244	SEALING COMPOUND -MIL-S-22473 GR E, 50 CC BOTTLE	CC	3	6	REV 7239	8030000812336

Downloaded from http://www.everyspec.com

CONSUMABLE ITEMS PART 1

P/N	FSCM	NOMENCLATURE	UM	EC	SL	ADDITIONAL INFO	NSN
MIL-S-22473	81349	SEALING COMPOUND -MIL-S-22473 GR A COLOR RED, 250 CC BOTTLE	CC	3	6	REV 7240	8030000676744
MIL-S-22473	81349	SEALING COMPOUND -MIL-S-22473 GR A, 10 CC BOTTLE	CC	3	6	REV 8034	8030000812331
MIL-S-22473	80244	SEALING COMPOUND -MIL-S-22473 GR AV, 50 CC BOTLE	CC	3	6	REV 6357, 7252	8030000812336
MIL-S-22473	80244	SEALING COMPOUND -GRADE CV, 50 CC BOTTLE TM 55-1520-210-23-1	CC	3	6	50 CC BT CONSUMABLE FOR	8030000812336
MIL-S-22473	80244	SEALING COMPOUND -GRADE AA, 10 CC BOTTLE TM 55-1520-210-23-1	CC	3	6	10 CC BST CONSUMABLE FOR	8030000812336
MIL-S-22473	81349	PRIMER, SEALING COMP -MIL-S-22473, GR N, FORM R, GREEN, 3 OZ BOTTLE	OZ	3	6	REV 7272	8030009002373
MIL-S-22473	81349	SEALING COMPOUND -GRADE H, 10 CC PER BTL	CC	3	6	REV 7273	8030000812326
MIL-S-22473	81349	PRIMER, SEALING COM -GRADE T, FORM R, 6 OZ CAN EA	OZ	3	5	REV 8034	8030001818372
MIL-S-22473 GRA	81349	SEALING COMPOUND -50 CUBIC CENTIMETER BOTTLE	CC	3	5	REV 7161	8030000812338
MIL-S-22473 GRA	80244	SEALING COMPOUND -	CC				
MIL-S-22473 GRAA	80244	SEALING COMPOUND -MIL-S-22473 GRAA, EPOXY RESIN COLOR GREEN, 50 CC BOTTLE	CC	3	6	REV 6357, 7239	8030000812340
MIL-S-22473 GRB	81349	SEALING COMPOUND -50 CUBIC CENTIMETER BOTTLE	CC	3	5	REV 7161	8030000819022
MIL-S-22473 GRB	80244	SEALING COMPOUND -MIL-S-22473 GR B COLOR YELLOW LIQUID, 10 CC BOTTLE	CC	3	6	REV 7243	8030000812335
MIL-S-22473 GRC	81349	SEALING COMPOUND -250 CUBIC CENTIMETER BOTTLE	CC	3	6	REV 7161	8030009647537
MIL-S-22473 GRT	81349	PRIMER, SEALING COMP -	GL	3	6		8030000822508

Downloaded from http://www.everyspec.com

CONSUMABLE ITEMS PART 1

P/N	FSCM	NOMENCLATURE	UM	EC	SL	ADDITIONAL INFO	NSN
MIL-S-23586	81349	SEALING COMPOUND -TYPE 2 AND CLASS 2 AND GRADE A, 3/4 PINT CAN w/CATALYST	PT	3	2	REV 7261	8030001236955
MIL-S-23586	81349	SEALING COMPOUND -TYPE 1 AND CLASS 1 AND GRADE B1, 1 PINT CAN	PT	3	2	REV 7261	8030001429128
MIL-S-4383	81349	SEALING COMPOUND -1 PT CAN	PT	3	4	REV 7271	8030006644019
MIL-S-45180	81349	SEALING COMPOUND -TY 11 11 OZ TUBE	OZ	3	6	REV 7280	8030002523391
MIL-S-46163	81349	SEALING COMPOUND -242-21 CONFORMS TO MIL-S-46163, TY1, GR A, 10 CC BOTTLE	CC	3	0	REV 6232 REV 7224	8030010888140
MIL-S-7124	81349	SEALING COMPOUND -B-2 CL, 1 PT KT	PT	3	4	1 PT KT TM 55-1500-345-23	8030000249634
MIL-S-7124	81349	SEALING COMPOUND -24 OZ BASE REQ CATALYST CLB-2 IN A 1 QT CAN	OZ	3	4	REV 7280	8030002758117
MIL-S-7916	81349	SEALING COMPOUND -1 PT CAN	PT	3	2	REV 7271	8030005434384
MIL-S-81733	81349	SEALING COMPOUND -1 GALLON KIT	GL	3	2	REV 7161	8030008718489
MIL-S-81733	81349	SEALING COMPOUND -3-1 TYPE, 1 GAL KIT	GL	3	2	REV 7232	8030008718489
MIL-S-81733	81349	SEALING COMPOUND -TYPE 1-1/2, 1 PT KIT	PT	3	2	REV 7257	8030000087207
MIL-S-83430	81349	SEALING COMPOUND -PR-1750 CLASS B-1/2, 1 PT KIT	PT	3	3	REV 7161	8030003487888
MIL-S-83430	81349	SEALING COMPOUND -PR-1750 CLASS A-2, 1/2 PT KIT	PT	1	3	REV 6224 REV 7161	8030003487888
MIL-S-8516	81349	SEALING COMPOUND -MIL-S- 8516 TY 2 CL 2, 1 QT KIT	OZ	3	2	REV 7243	8030001742597
MIL-S-8516	81349	SEALING COMPOUND -TYPE 2 AND CLASS 1, 1 QT CAN W/CATALYST	QT	3	2	REV 7257	8030008815238
MIL-S-8516	81349	SEALING COMPOUND -TYPE 2 AND CLASS 3, 1/2 PT CAN W/CATALYST	PT	3	2	REV 7257	
MIL-S-8516	81349	SEALING COMPOUND -TYPE 1 AND CLASS 1, 3 5 OZ CARTRIDGE	OZ	3	2	REV 7261	

Downloaded from http://www.everyspec.com

CONSUMABLE ITEMS PART 1

P/N	FSCM	NOMENCLATURE	UM	EC	SL	ADDITIONAL INFO	NSN
MIL-S-8516	81349	SEALING COMPOUND -TYPE 2 AND CLASS 1, 2 1/2 OZ CARTRIDGE W/CATALYST	OZ	3 2	REV 7261		
MIL-S-8516	81349	SEALING COMPOUND -TY2 CL3 24 OZ IN A 1 QT CAN W/REQ CATALYST	QT	3 2	REV 8035		8030006848790
MIL-S-8660	81349	SILICONE COMPOUND -8 OZ TUBE	OZ	3	7	REV 7161	6850008807616
MIL-S-8660	81349	SILICONE COMPOUND -	OZ	1	7	REV 6230	6850008807616
MIL-S-8660	81349	SILICONE COMPOUND -	OZ	1	7	REV 6230	6850008807616
MIL-S-8660	81349	SILICONE COMPOUND -2 OZ TUBE	OZ	3	7	REV 7273	6850001775094
MIL-S-8784	81349	SEALING COMPOUND -CLASS AZ 2.5 OZ CARTRIDGE	OZ	3	4	REV 7261	8030001520062
MIL-S-8784	81349	SEALING COMPOUND -CLASS B-1/2, 2.5 OZ CARTRIDGE	OZ	3	4	REV 7261	8030001520022
MIL-S-8784	81349	SEALING COMPOUND -CLASS A-1/2, 1/2 PT KIT	OZ	3	4	REV 7261	8030002918380
MIL-S-8784	81349	SEALING COMPOUND -CLASS B-2, 12 OZ JAR	OZ	3	4	REV 7261	8030006802041
MIL-S-8784	81349	SEALING COMPOUND -CL B-1/2, 8 0Z CARTRIDGE RED PASTE	OZ	3	4	80Z CARTRIDGE RED PASTE TM 55-1500-345-23	
MIL-S-8802	81349	SEALING COMPOUND -MIL-S-8802 TY1, CLA-2, 3 375 OUNCE CARTRIDGE	OZ	3	3	REV 7161	8030007535009
MIL-S-8802	81349	SEALING COMPOUND -MIL-S-8802 TY 2 A-1/2 2 OZ BASE AND CURING AGENT	OZ	1	3	REV 7232	8030007535008
MIL-S-8802	80244	SEALING COMPOUND -MIL-S-8802 TYPE 2 AND CLASS B-2, 1 PT BASE COMPOUND AND	PT	3	3	REV 7239	8030007232746
MIL-S-8802	80244	SEALING COMPOUND -MIL-S-8802 TYPE 2 AND CLASS B-2,2 OZ CARTRIDGE	OZ	3	3	REV 8035	8030007232746
MIL-S-8802	81349	SEALING COMPOUND -TYPE 2 AND CLASS B-2,1 QT KIT	OZ	3	3	REV 7261	8030006850915

Downloaded from http://www.everyspec.com

CONSUMABLE ITEMS PART 1

P/N	FSCM	NOMENCLATURE	UM	EC	SL	ADDITIONAL INFO	NSN
MIL-S-8802	81349	SEALING COMPOUND -TYPE 2 AND CLASS A-2, 1 QT KIT	QT	3	3	REV 7261	8030007232746
MIL-S-8802 A-2, 1 PT CAN	81349	SEALING COMPOUND -TYPE 2 AND CLASS	PT	3	3	REV 7261	
MILS-8802	81349	SEALING COMPOUND -1/2 PT BASE REQ CATALYST TY2 CLB-2 KIT	PT	3	3	REV 8035	8030007534599
MIL-S-8802 TYICLA-1	80244	SEALING COMPOUND -MIL-S8802 TYI CLA-1, 1 QT KIT	OZ	3	0	REV 7161	8030011565308
MIL-S-8802 TY2CLA-2	80244	SEALING COMPOUND -	OZ				
MIL-STD-612	96906	SODIUM HYDROXIDE, TE -	LB				
MIL-STD-612	96906	SODIUM HYDROXIDE -1 30UNCE CAN	OZ	3	5	REV 7217	6810002708177
MIL-T-19588	81349	TOLUENE-METHYL ISOB -5 GAL CAN	GL	3	0	REV 8035	6810002860458
MIL-T-21595	81349	TAPE, PRESSURE SENSI -MIL-T-21595,TY1, 2 IN WD GREEN	IN	3	4	2160 INCHES ROLL	7510006802395
MIL-T-21595	81349	TAPE PRESSURE SENSI -TYPE 1 AND OPAQUE, 60 YD ROLL	YD	3	4	REV 7257	7510006802471
MIL-T-21595	81349	TAPE PRESSURE SENSI -TYPE 1 AND OPAQUE, 60 YD LONG AND 0 500 WIDE ROLL	YD	3	4	REV 6224, 7257	7510006802450
MIL-T-21595	81349	TAPE PRESSURE SENSI -TYPE 1 AND GREEN, 60 YD LONG AND 1 IN WIDE ROLL	YD	3	4	REV 6232, 7257	7510006854963
MIL-T-22085	81349	TAPE PRESSURE SENT -TYPE 2, 50 YD ROLL AND 3 IN WIDE	YD	3	4	REV 7257	
MIL-T-22085	81349	TAPE PRESSURE SENAT -TYPE 2, 60 YD ROLL AND 2 IN WIDE	YD	3	4	REV 7257	
MIL-T-22085	81349	TAPE, PRESSURE SENA -TYPE 2, 36 YD ROLL AND 4 IN WIDE	YD	3	6	REV 7257	
MIL-T-22085	81349	TAPE, PRESSURE SENT -TYPE 2,60 YD ROLL AND 1 IN WIDE	YD	3	4	REV 7257	
MIL-T-22361	81349	ANTISEIZE COMPOU - OZ TUBE	OZ	3	4	REV 7273	803000292110

Downloaded from http://www.everyspec.com

CONSUMABLE ITEMS PART 1

P/N	FSCM	NOMENCLATURE	UM	EC	SL	ADDITIONAL INFO	NSN
MIL-T-23142	81349	TAPE, PRESSURE SENSI -MIL-T-23142 1 IN WIDE AND 2592	YD	3	4	REV 8035	7510004724021
MIL-T-27730	81349	TAPE ANTISEIZING -SIZE 2, 260 IN LONG ON ASPOOL	IN	3	7	REV 7261	8030008893535
MIL-T-4053	81349	TAPE, PRESSURE SENSI -2 IN WIDE X 60 YD LONG	YD	3	4	REV 7280	7510005150319
MIL-T-43435	81349	TAPE, LACING AND TYI -MIL-T-43435 TY5 FINSH B SIZE 1,250 YARD SPOOL	YD	3	0	REV 7161	4020007536329
MIL-T-43435	81349	TAPE, LACING AND TYI -MIL-T-43435 TY2, FINISH C, SZ 5, 250 YARD SPODL	YD	3	0	REV 7162	4020008237211
MIL-T-43455	81349	TAPE LACING AND TYI -MIL-T-43455 TY1, FINISH B, SZ3, 500 YARD SPOOL	YD	3	0	REV 7162	4020007536555
MIL-T-50036	81349	TALC, TECHNICAL -TY T1, ASBESTOS FREE, 5 LB CONTAINER	LB	3	0	REV 7275	6810010809589
MIL-T-5542	81349	ANTISEIZE COMPOND -AIRCRAFT OXYGEN SYSTEMS, 1 POUND CAN	LB	3	7	REV 7273	8030005305234
MIL-T-5544	81349	ANTISEIZE COMPOUND -250 GRAM TUBE	OZ	3	0	REV 7157	8030011381666
MIL-T-6096	81349	THINNER, DOPE AND LA -1 GAL CAN	GL	3	7	REV 7272	8010001655582
MIL-T-713	81349	TWINE, FIBROUS -TY P CL 2 2250 FT SPOOL POLYAMIDE NYLON	LB	3	0	REV 7280	4020002021924
MIL-T-81533	81349	1,1,1-TRICHLOROETHA -54 GALLON DRUM	GL	3	0	REV 7156	6810004765613
MIL-T-81772	81349	THINNER,SYNTHETIC R -1 GALLON CAN	GL	3	5	REV 7161	8010001818080
MIL-T-83483	81349	ANTISEIZE COMPOUND -MOLYBDENUM DISSULFIDE, 1 LB CN	LB	3	6	REV 8035	8030000878630
MIL-T-9906	81349	TAPE IDENTIFICATION -1 IN WIDE AND 72 YD ROLL	FT	3	0	REV 7253	7510002769427

Downloaded from http://www.everyspec.com

CONSUMABLE ITEMS PART 1

P/N	FSCM	NOMENCLATURE	UM	EC	SL	ADDITIONAL INFO	NSN
MIL-T-9906	81349	MARKER, IDENTIFICATI -1 IN WIDE AND 50 YD ROLL	FT	3	0	REV 6302, 7223, 7253	7690003684661
MIL-V-173	81349	VARNISH, OIL -COMPOSITION 2, 1 QT CAN	QT	3	4	REV 7257	8010001806343
MIL-W-006882	81349	RAIN REPELLENT, WIND-8 OZ BOTTLE	OZ	3	0	REV 8035	6850001395297
MIL-W-5044	81349	WALKWAY COMPOUND, NO-TY 2 BRUSH BLACK #37038, 1 GAL CAN	GL	3	4	1 GAL CAN TM 55-1500-345-23	5610006410427
MIL-W-5044 TY2	80244	WALKWAY COMPOUND, NO-1 GALLON CAN	GL	3	4	REV 7161	5610006410427
MILA10825	81349	ALUMINUM OXIDE, ANHY -MILA10825 1LB BOTTLE POWDER	LB	3	0	REV 7225	6810001618558
MILA18455	81349	ARGON, TECHNICAL -197 CUBIC FOOT GAS CYLINDER	CF	3	0	REV 7212	6830001690779
MILA18455	81349	ARGON, TECHNICAL -250 CUBIC FOOT	CF	3	0		6830002904291
MILA8623	81349	ADHESIVE -	KT				
MILA907-2LB8OZCN	81349	ANTISEIZE COMPOUND -	LB				
MILB131	81349	BARRIER MATERIAL WA -200 YARD PER ROLL	YD	3	0	REV 7219	8135002820565
MILB81705	81349	BARRIER MATERIAL, GR -CLASS 1,200 YD ROLL	YD	3	0	REV 7257	8135000923220
MILC10578	81349	CORROSION REMOVI -TYPE 2, 1 GAL BOTTLE	GL	3	0	REV 7271	6850001749672
MILC10578	81349	CORROSION REMOVING -TY 3, 5 GAL DRUM	GL	3	0	REV 7275	6850008547952
MILC10578	81349	CORROSION REMOVING -TY1, 15 GL DRUM	GL	3	0	REV 8035	6850009265298
MILC10578	81349	CORROSION REMOVI -TYPE 2. 1 GAL BOTTLE	GL	3	0	REV 7280	6850001749672
MILC11162	81349	CALCIUM FLUORIDE, AN - 25 POUND BOTTLE	LB	3	0	REV 7273	6810002628574
MILC11796CLASS1A	81349	CORROSION PREVENTIV -CLASS 1A, 35 LB CAN	LB	3	0	35 LB CN CONSUMABLE FOR TM 55-1520-210-23-1	8030008238054
MILC11796CL3-5LBCN	81349	CORROSION PREVENTIV -5 LB CAN CLASS 3	LB	3	7	REV 8035	8030002312353
MILC12038	81349	CHLOROBENZENE, TECH -	GL	3	0		
MILC12369	81349	CLOTH, BALLLISTIC -CLASS 1,48 IN WIDE, COLOR #1 06	SY	3	0	USED FOR REPAIR OF ARMOR SPALL SHIELDS TM 55-1 500-204-25/1	8305007826354

Downloaded from http://www.everyspec.com

CONSUMABLE ITEMS PART 1

P/N	FSCM	NOMENCLATURE	UM	EC	SL	ADDITIONAL INFO	NSN
MILC12369	81349	CLOTH, BALLISTIC -CLASS 2, 48 IN WIDE COLOR GREEN #106	SY	3	0	USED FOR REPAIR OF ARMOR SPALL SHIELDS TM 55-1500-204-25/1	
MILC12369	81349	CLOTH, BALLLISTIC -CLASS 1,48 IN WIDE COLOR NATURAL	SY	3	0	USED FOR REPAIR OF ARMOR SPALL SHIELDS TM 55-1500-204-25/1	8305007826354
MILC15074-1QTCN	81349	CORROSION PREVENTIV -MIL-C-15074 1 QT CAN	QT	1	4	REV 7229	8030006644017
MILC22787	81349	CLOTH, COATED -1 TYPE 52 IN WIDE FIRE RESISTANT AND WATERPROOF, COLOR GRAY	YD	3	0	REV 7275	8305005144263
MILC23092	81349	ADHESIVE -LIQUID 8 OZ BOTTLE	OZ	3	K		8040000511318
MILC23411	81349	CORROSIONPREVENTIV -	OZ				
MILC25769	81349	CLEANING COMPOUND, A -55 GL DRUM	GL	3	0	REV 7253	6850009350995
MILC27347	81349	CLOTH,COATED -36 IN WIDE FIRE RESISTANT	YD	3	0	REV 7253	8305001388948
MILC4339	81349	CORROSION PREVENTIV -5 GAL CAN	GL	3	7	REV 7271	6850002249582
MILC46149	81349	CUTTING FLUID -55 GAL DRUM	GL	3	7	REV 7280	9150000048990
MILC5040	81349	CORD, FIBROUS -500 YD SPOOL	YD	3	0	REV 7238	4020002402154
MILC5040	81349	CORD, FIBROUS -400 YARD SPOOL	YD	3	0	REV 7238	4020002460688
MILC5646	81349	CLOTH, AIRPLANE -MILC5646 36 IN WIDE	YD	3	0	REV 7239	8305001913977
MILC6529	81349	CORROSION PREVEN -TYPE 2, 55 GAL DRUM	GL	3	7	REV 7271	6850002097234
MILC7024	81349	CALIBRATING FLUI -55 GALLON DRUM	GL	3	7	REV 7218	6850002645771
MILC7024	81349	CALIBRATING FLUID, A -TYPE 1, 55 GAL DRUM	GL	3	7	REV 7271	6850002698388
MILC7204	81349	CALIBRATING FLUI -TYPE 2, 55 GAL DRUM	GL	3	7	REV 7275	6850002645771
MILC8068	81349	CLOTH, COATED -MILC8068 TY 2 COLOR BLACK, 0 0206 IN THICK AND 46 IN WIDE	YD	3	0	REV 7240	8305006415603
MILC81302	81349	CLEANING COMPOUNDXS-TYPE 1, 5 GL CAN	GL	3	0	REV 7254	6850000338851
MILC81309	81349	CORROSION PREVENTIV -TYPE 1, 5 GL CAN	GL	3	4	REV 6357, 7257	8030002627358

Downloaded from http://www.everyspec.com

CONSUMABLE ITEMS PART 1

P/N	FSCM	NOMENCLATURE	UM	EC	SL	ADDITIONAL INFO	NSN
MILC81706	81349	CORROSION RESISTANT -MILC81706CL1A, FORM2, METHOD B, 2 LB CAN	EA	3	6	REV 7156	8030008113723
MILC83360	81349	CLEANING AND LUBRIC -TYPE 1, 16 OZ CAN	OZ	3	6	REV 6357 7254	6850000035295
MILC8514	81349	COATING COMPOUND, ME-MIL-C-8514 5 GAL KIT	GL	1	4	REV 7232	8030000822425
MILC9084	81349	CLOTH, SATIN -MILC9084 TYPE X AND CLASS 1, 381N WIDE, YARD	YD	3	0	REV 7240	8305000826135
MILD26549	81349	CLEANING COMPOUND, A -55 GAL DRUM	GL	3	0	REV 7209	6850005971528
MILD3464	81349	DESICCANT, ACTIVATED -TYPE 1, 500 BAGS PER DRUM	EA	3	0	REV 7257	6850002646574
MILD5549A	81349	DOPE -1 GAL CN	GL	3	6	REV 8035	8010002234037
MILD5553	81349	DOPE -1 PT CAN	PT	3	6	REV 7271	8010002970574
MILE21840	81349	FASTENER TAPE, PILE AND 2 IN WIDE, YARD -MILE21840 CLASS 1	YD	3	0	REV 7240	8315009264930
MILE5556	81349	ENAMEL -	QT				
MILE7125	81349	ETHYLENE GLYCOL MON -1 GAL CAN	GL	3	0	1 GAL CAN TM 55-1500-345-23	6810002630563
MILF12070	81349	FOG OIL -TY SGF-2 55 GAL DRUM	GL	3	4	REV 7280	9150002617895
MILF16884	81349	DIESEL FUEL -GR F-75 5 GAL CAN	GL	3	0	REV 7280	9140002557764
MILG25013	81349	GREASE, BALL & ROL -8 OZ TUBE	EA	3	6	REV 8035	
MILG36592	81349	GLOVE, PATIENT EXAMI -100 PER BOX	EA	3	0	REV 7156	6515004620832
MILG5634	81349	GRAIN ABRASIVE -	LB	3	0	REPLACES H2H701CNEM	
MILG7187 1LBCAN	81349	GREASE, MOLYBDENUM D -	LB	1	6	REV 6231	9150007542595
MILH6083	81349	HYDRAULIC FLUID, PET -1 GLCAN	GL	3	6	REV 7240	9150009359808
MIL16903	81349	INK, MARKING, PARACHU -TYPE IV, COLOR ORANGE-YELLOW 16 OZ BOTTLE	OZ	3	0	REV 7271	7510006346583
MIL16903	81349	INK, MARKING, PARACHU -TYPE 1 COLOR-BLUE, 16 OZ BOTTLE	OZ	3	0	REV 7271	7510001449672
MILL15719	81349	GREASE, SILICONE INS -8 OZTUBE	OZ	3	6	REV 7233	9150002575358

Downloaded from http://www.everyspec.com

CONSUMABLE ITEMS PART 1

P/N	FSCM	NOMENCLATURE		UM	EC	SL	ADDITIONAL INFO	NSN
MILL2104	81349	LUBRICATING OIL, ENG & 16 80 MAX 210 DEG F	-12 90 MIN 210 DEG F	QT	3	7	REV 7272	9150001896730
MILL2104	81349	LUBRICATING OIL, ENG DRUM	-10W GRADE, 55 GAL	GL	3	6	VISCOSITY-5 70 MIN 210 DEG F & 7 50 MAX 210 DEG F	9150001912772
MILL2104	81349	LUBRICATING OIL	-GRADE 40, 1 QT CAN	QT	3	7	REV 7280	
MILL22851	81349	LUBRICATING OIL	-TYPE 3	GL	3	7	55 GL DR CONSUMABLE FOR TM 55-1500-333-24	9150009652305
MILL23699	81349	LUBRICATING OIL, AIR	-1 QT CAN	QT	1	7	REV 6232, REV 7232	9150009857099
MILL23699	81349	LUBRICATING OIL, AIR	-8 OZ CAN	OZ	3	7	REV 8035	9150001806266
MILL46010	81349	LUBRICANT, SOLID FIL	-1 QT CAN	QT	1	H	REV 7253	9150009486912
MILL46147	81349	LUBRICANT, SOLID FIL PRESSURIZED	-16 OZ CAN	OZ	3	H	REV 7233	9150001682000
MILL46152	81349	LUBRICATING OIL	-GRADE 30, 1 QT CAN	QT	3	6	VISCOSITY TEMP-9 60 MIN 210 DEG F & 12 90 MAX 210 DEG F	
MILL46152	81349	LUBRICATING OIL, ENG DRUM	-GRADE 30, 55 GAL	GL	3	6	VISCOSITY-9 60 MIN 210 DEG F & 12 90 MAX 210 DEF F	9150001866696
MILL46152	81349	LUBRICATING OIL	-10-30W, 1 QT CAN	QT	3	6	VISCOSITY-930 MIN 100 DEG C & 12 50 MAX 100 DEG C	
MILL46152	81349	LUBRICATING OIL GAL DRUM	-10W-30W GRADE, 55	GL	3	6	9 60 MIN 210 DEG F & 12 90 MAX 210 DEG F FLASH POINT 210 DEG F	
MILL6081	81349	LUBRICATING OIL, AIR	-1 QT CAN	QT	3	7	REV 6224, REV 7218	9150002732388
MILL6081	81349	LUBRICATING OIL, AIR DRUM	-GRADE 1010, 55 GAL	GL	3	7	REV 7271	9150002316676
MILL6081	81349	LUBRICATING OIL,	-GRADE 1010, 1 QT CAN	QT	3	7	REV 8036	9150002732388
MILL7870	81349	LUBRICATING OIL, GEN	-1 QT CAN	QT	3	7	VISCOSITY TEMP-10 00 MIN 100 DEG F & 4000 MAX -40DEG F	9150002633490
MILL81352	81349	LACQUER AEROSOL CAN	-RED #11136, 16 OZ	PT	3	6	REV 7275	
MILL81352	81349	LACQUER AEROSOL CAN	-WHITE 17875,16 OZ	PT	3	6	REV 7275	

Downloaded from http://www.everyspec.com

CONSUMABLE ITEMS PART 1

P/N	FSCM	NOMENCLATURE	UM	EC	SL	ADDITIONAL INFO	NSN
MILL8362	81349	LUBRICANT, TIRE AND -1 GAL CAN	GL	3	0	REV 7271	2640002617458
MILL8937	81349	LUBRICANT, SOLID -MIL-L-8937, FORM A, 1 GALLON CAN	GL	3	H	REV 7156	9150009857255
MILM58091	81349	MAINTENANCE KIT, WIN -CONSUMABLE FOR TM 55-1500-343-23 POLISH KIT GLASS	EA	3	0		1560004503622
MILP15035	81349	PLASTIC SHEET -MIL-P-15035 TYPE FBM, 0.625 THICKNESS	SH	3	0	REV 6302, REV 7223	9330002603800
MILP15328	81349	COATING COMPOUND, ME -KIT CONTAINING AN 8 GAL AND 2 GAL CONTAINERS	GL	3	4	KIT CONTAINING AN 8 GAL AND 2 GAL CONTAINERS TM 55-1500-345-23	8030002812726
MILP22241	81349	INSULATION SHEET, EL -GRADE B & TYPE 1	SH	3	0	36 IN WIDE X 1 5 FT LONG X 0 125 IN THICK	5970000638526
MILP3237	81349	POLISHING ABRASIVE, -SIZE B, 2 AND 1/2 LB CAN	LB	3	0	2 1/2 LB CN CONSUMABLE FOR TM 55-1520-210-23-1	5350002998651
MILP8116-10LBCN	81349	PUTTY -10 LB CAN	LB	3	7	REV 7070, 7239	8030006644968
MILR17343	81349	ROPE, FIBROUS -3/4 CIRCUM, 900 FT SPOOL	FT	3	0	REV 7161	4020005239641
MILR17347	81349	ROPE, FIBROUS -ROPE, FIBROUS, 1 IN CIRCUMFERENCE, 14 YDS LENGTH	FT	3	0		
MILR3043	81349	RESIN COATING, THERM -1 QT CAN	QT	3	6	REV 7223	
MILR46082	81349	SEALING COMPOUND -50 CUBIC CENTIMETER BOTTLE	CC	3	5	REV 7198	8030001806222
MILR6855	81349	RUBBER SHEET -TYAGR 60 CL2 625 TK 36X36 IN SHEET	SH	3	0	REV 7280	
MILR7575TYPE1	81349	ADHESIVE -GRADE A AND CLASS 0, 5 GAL CAN	GL	3	2	REV 7271	8040002910162
MILSTD1218	96906	AMMONIUM NITRATE, AC -1 LB BOTTLE	LB	3	0	REV 7237	6810002229679
MILSTD605	96906	NITRIC ACID, TECHNIC -	BT				
MILSTD605	96906	SULFURIC ACID, TECHN -	LB				
MILSTD605	96906	SULFURIC ACID, TECHN -	PT				

Downloaded from http://www.everyspec.com

CONSUMABLE ITEMS PART 1

P/N	FSCM	NOMENCLATURE	UM	EC	SL	ADDITIONAL INFO	NSN
MILS11030	81349	SEALING COMPOUND -MILS11030 TYPE III, 60 FT ROLL	FT	3	4	REV 7243	8030009652438
MILS11030	81349	SEALING COMPOUND -TYPE 1, 1 PT CAN	PT	3	4	1 PT CN CONSUMABLE FOR TM 55-1520-210-23-1	8030002758114
MILS13727	81349	SODIUM PHOSPHATE, MO -100 LB BAG	LB	3	0	REV 6357, 7257	6810002811858
MILS18729	81349	SHEET, METAL -3FT X 8FT, A CONDITION, 0 0320 THK	SH	3	0	REV 7275	9515006404146
MILS22473	81349	SEALING COMPOUND -	CC	1	0		
MILS22473GRADEH	81349	SEALING COMPOUND -MIL-S-22473 GR H BROWN LIQUID, 10 CC BOTTLE	CC	3	6	REV 7243	
MILS22473GRADET	81349	SEALING COMPOUND -	EA				
MILS22805	81349	SPRAY KIT, SELF PRES -KIT, 6 SPRAY DEVICES 10 PROPELLANT CANS 4 PRODUCT JARS 20 DIP	OZ	3	0	REV 7280	4940008036444
MILS23586	81349	SEALING COMPOUND -MIL-S-23586 TYII CL2 GRA3/4 PT BASE COMPOUND AND PROPER	PT	3	2	REV 7233	8030001236955
MILS36157	81349	SYRINGE, HYPODERMIC -MILS36157TYPIAND SIZE 5, 100 PER PACKAGE	EA	3	0	REV 7239	6515007540412
MILS46163TYPE1GRADEJ-10OCC	81349	SEALING COMPOUND - BOTTLE	CC				
MILS5059 1/2 HARD TEMPER, 3FT X 1 OFT	81348	SHEET, METAL -301COMPOSITION AND	SH	3	0	REV 7275	9515005961727
MILS81733	81349	SEALING COMPOUND -TYPE 2-1/2, 1 PT KIT	PT	3	2	REV 7257	8030000087198
MILS81733	81349	SEALING COMPOUND -TYPE 1-2, 1 PT KIT	PT	3	2	REV 6225, 7257	
MILS8660-8UNZENTUBE	D2222	SILICONE COMPOUND -8 OZ TUBE	OZ	3	7	REV 7273	6850008807616
MILT23397	81349	TAPE, PRESSURE SENSI -MILT23397TYPE2 21N WIDE, 2160 INCHE ROLL	IN	3	7	REV 7161	7510004739513
MILT27602	81349	TRICHLOROETHYLENE, T -55 GL DRUM	GL	3	7	REV 7254	6810008129181
MILT5624	81349	TURBINE FUEL AVIATI -GRADE JP-4, GALLON	GL	3	0	REV 6225 REV 7219	9130002568613
MILT713	81348	TWINE, FIBROUS -TYPE PWAXED & CLASS 2	LB	3	0	SP 0 5 LB CONSUMABLE FOR TM 55-1520-210-23-1	4020002021924

Downloaded from http://www.everyspec.com

CONSUMABLE ITEMS PART 1

P/N	FSCM	NOMENCLATURE		UM	EC	SL	ADDITIONAL INFO	NSN
MILT713	81349	TWINE, FIBROUS 900 FT TUBE	-N TYPE AND CL1,	LB	3	0	REV 7280	4020002471737
MILV173	81349	INSULATING VARNISH, 2, 1 GL CAN	-TYPE 2 AND AAMEND	GL	3	7	REV 7257	5970002850271
MILV173	81349	INSULATING VARNI CAN	-COMPOSITION 2, 5 GL	GL	3	6	REV 7257	5970002850269
MILW535	81349	SILVER NITRATE SOLU	-8 OZ BOTTLE	OZ	3	0	REV 7271	6810002821218
MMM-A-121	81348	ADHESIVE	--	QT				
MMM-A-121	81348	ADHESIVE LIQUID FORM, 1 PINT CAN	--ADHESIVE RUBBER	PT	3	4	REV 7238	8040002738717
MMM-A-121	81348	ACETIC ACID GLACIAL ACID 1 POUND BOTTLE	-99 5 MIN VOL ACETIC	LB	3	0	REV 7273	
MMM-A-121	81348	ADHESIVE BONDING RUBBER TO STEEL, 1 QT CAN	-LIQUID USAGE	OZ	3	4	REV 7275	8040001658614
MMM-A-122	81348	ADHESIVE	-1 PT CAN	PT	34		1 PT CN CONSUMABLE FOR TM 55-1520-210-23-1	8040006640439
MMM-A-122	81348	ADHESIVE	-1 PINT CAN	PT	3	4	REV 8036	8040006640439
MMM-A-132	81348	ADHESIVE LM, 121N X 121N, 1000 SHEETS PER BOX	-MMM-A-132, TY1, CL2, FI	SH	3	F	REV 7157	8040001161437
MMM-A-132	81348	ADHESIVE COLOR GRAY, 8 OZ PLASTIC CARTRIDGE	-MMMA132 TY 1CL 3 OZ	3	2		REV 7240	8040001520023
MMM-A-1 32	81348	ADHESIVE COLOR GRAY, 6 OZ PLASTIC CARTRIDGE	-MMMA132 TY CL3		OZ	3 2	REV 7253	8040001520028
MMM-A-132	81348	ADHESIVE CL3, 80Z CARTRIDGE	-MMM-A-132, TY1,	OZ	3	2	REV 8036	8040001520023
MMM-A-132	81348	ADHESIVE PINT CAN	-TYPE 1, CLASS 1, 1	PT	3	2	REV 7273	8040001520023
MMM-A-132	81348	ADHESIVE GRAY	-TY1, CL3, 8 OZ, COLOR	EA	3	2	REV 7273	8040001520023
MMM-A-132	81348	ADHESIVE	-TY1CL3, 1QT KIT, GRAY	EA	3	2	REV 7274	8040011022098
MMM-A-132 TY1CL2	80244	ADHESIVE		SH				

Downloaded from http://www.everyspec.com

CONSUMABLE ITEMS PART 1

P/N	FSCM	NOMENCLATURE		UM	EC	SL	ADDITIONAL INFO	NSN
MMM-A-134	81348	ADHESIVE	--	EA				
MMM-A-134	81348	ADHESIVE CARTRIDGE	-TYPE 1, 6 OZ	OZ	3	4	REV 7261	8040001520065
MMM-A-134	80244	ADHESIVE AND 2 OZ BOTTLE CURING AGENT	-TYPE II1, 1 PT CAN	PT	3	4	1 PTCN AND 20Z BT CURING AGENT CONSUMABLE FOR	8040006911322
MMM-A-134	81348	ADHESIVE	-TYPE 1, 1 QT CAN	QT	3	4	1 QT CN CONSUMABLE FOR TM 55-1520-210-23-1	8040002708137
MMM-A-134	81348	ADHESIVE	-TYPE 2, 1 EA KIT	EA	3	4	REV 7273	8040002004390
MMM-A-134	81348	ADHESIVE	-TY2, 1PT KIT	EA	3	4	REV 8036	8040006911322
MMM-A-1 34 TY1	80244	ADHESIVE	EA					
MMM-A-1 34 TY1	80244	ADHESIVE	KT					
MMM-A-1 34 TY2	80244	ADHESIVE	KT					
MMM-A-139	81348	ADHESIVE 1 PT CAN KIT	-CLASS 3 AND FORM B,	PT	3	4	REV 7261	8040002629062
MMM-A-139	81348	ADHESIVE 1 QT CAN	-CLASS 3 AND FORM B,	OT	3	4	REV 7261	8040002918381
MMM-A-1617	76381	ADHESIVE		PT	3	4		8040002629011
MMM-A-1617	81348	ADHESIVE 1 PT CAN	-MM-M-A-1617 TYPE 2,	PT	3	2	REV 7233	8040006644318
MMM-A-1617	81348	ADHESIVE	-TYPE 2, 1 QT CAN	OT	3	2	REV 7271	8040002904301
MMM-A-1754	81348	ADHESIVE	-11 OZ TUBE KIT	OZ	3	4	REV 7232	8040007386429
MMM-A-1754	81348	ADHESIVE TUBE KIT	-LIGHT GRAY, 6 OZ	EA	3	4	REV 7273	8040009447292
MMM-A-185	81348	ADHESIVE	-1 GL CAN	GL	3	5	REV 7261	8040002629040
MMMA122	81348	ADHESIVE	-1 PT CAN	PT	3	4	REV 7233	8040006640439
MMMA132	81348	ADHESIVE COLOR GRAY, 2 5 OZ PLASTIC CARTRIDGE	-MMMA132 TY 1 CL 3	OZ	3	2	REV 7240	8040001520017

Downloaded from http://www.everyspec.com

CONSUMABLE ITEMS PART 1

P/N	FSCM	NOMENCLATURE	UM	EC	SL	ADDITIONAL INFO	NSN
MMMA134	81348	ADHESIVE -MMM-A-134 TY1,1 PT KIT	PT	3	4	REV 7198	8040009006296
MOBILAEROHFB	92895	HYDRAULIC FLUID -QT					
MOBILGREASE 28	77988	GREASE, ARRESTING GE -120 LB DRUM	LB	3	0	REV 7273	9150012377468
MOBILGREASE28	77988	GREASE, AIRCRAFT -	LB	1	6	REV 6235	9150001450268
MOBIL28	77988	GREASE, AIRCRAFT -	CN				
MOLITHN02MOLY	73219	GREASE, MOLYBDENUM D -	LB	1	6	REV 6231	9150007542595
MOLYKOTE FS3451 2 GREASE	71984	GREASE, BALLANDROL -30ZTUBE	OZ	3	6	3 OZ TUBE CONSUMABLE FOR TM 55-1520-210-23-1	9150010401423
MOLYKOTE G	94499	ANTISEIZE COMPOUND -	OZ				
MOLYKOTE G-N	94499	ANTISEIZE COMPOUND -2 8 OZ TUBE	OZ	3	7	REV 7225	8030008314171
MOLYKOTE M-77	94499	GREASE, MOLYBDENUM D -15 LB CAN	OZ	3	6	REV 6357 REV 7237	9150000761582
MOLYKOTE3402	94499	LUBRICANT, SOLID FIL -	OZ				
MOLYLUBE 1200	12474	LUBRICANT, SOLID FIL -321R IS OBS BY MOLYLUBE 1200, 15 OZ CAN AEROSOL	OZ	3	K	REV 7224	9150000801026
MOLYLUBE 503	12474	GREASE, GENERAL PURP -14 OZ CARTRIDGE	OZ	3	7	REV 7280	9150001414481
MPD11881TY4	18876	ADHESIVE -100 GRAM KIT, TUBE	GM	3	4	REV 6357, 7257	8040000618303
MS13	06565	STONE, SHARPENING -	EA				
MS14366E019	96906	CHANNEL, STRUCTURAL -QQ-A-200/3 TEMPER T3511, LENGTH 10 MIN AND 12 FT MAX	FT	1	0	REV 7253	9540011255198
MS180FREONTF	18598	CLEANING COMPOUND -	CN				
MS20003-2	96906	INDICATOR, HUMIDITY, -125 EA PER CAN	EA	3	0	REV 7257	6685007528240
MS2099NC20	96906	WIRE, NONELECTRICAL -DIA 020, 831 FT PER SPOOL	FT	3	0	REV 7273	9525006180257

Downloaded from http://www.everyspec.com

CONSUMABLE ITEMS PART 1

P/N	FSCM	NOMENCLATURE	UM	EC	SL	ADDITIONAL INFO	NSN
MS2099NC20	96906	WIRE, NONELECTRICAL -DIA 0020, 831 FT ROLL	PT	3	0	REV 8036	9525006180257
MS20995AB32	96906	WIRE,NONELECTRICAL -1 POUNDROLL,SIZE 0.032	LB	3	0	REV 7198	9525010311086
M520995CU20	96906	WIRE, NONELECTRICAL --	LB				
MS20995CY20	96906	WIRE, NONELECTRICAL -1 LB ROLL	LB	1	0	REV 7156	9525010476455
MS20995C20	96906	WIRE, NONELECTRICAL -935 FT ROLL	LB	3	0	REV 8036	9505002212650
MS20995C20	96906	WIRE, NONELECTRICAL -DIA 020,1 LB PER ROLL	LB	3	0	REV 7273	9505002212650
MS20995C20	96906	WIRE, NONELECTRICAL -FORM 1,302 OR 304 OR 306 TEMP, COND A, 0 020 DIA 5 LB ROLL	LB	3	0	REV 7273	9505002212650
MS20995C32	96906	WIRE, NONELECTRICAL -	LB				
MS20995C41	96906	WIRE, NONELECTRICAL -1 LB ROLL, 1 FORM & A COMPOSITION, SIZE 0 041	FT	3	0	REV 7198	9505003313275
MS20995C47	96906	WIRE, NONELECTRICAL -189 FT ROLL	LB	3	0	189 FOOT ROLL	9505005558648
MS20995F20	96906	WIRE, NONELECTRICAL -37 300 FT ROLL	LB	3	0	REV 7156	9505000873956
MS20995F47	96906	WIRE, NONELECTRICAL -STEEL QQ-W-461 COMP 1010 FINISH 5CLASS 1 DIA 048	LB	3	0	REV 8036	9505002489850
MS20995F47	96906	WIRE, NONELECTRICAL -	FT	3	0	REV 6232, 7243	9505002489850
MS20995NC32	96906	WIRE, NONELECTRICAL -1 LB ROLL	LB	3	0	REV 7156	9525003556072
MS20995NC32	96906	WIRE, NONELECTRICAL -	LB	1	0		9525003556072
MS20995NC40	96906	WIRE, NONELECTRICAL -WEIGHT 1 LB PER PIECE PER UNIT MEASURE	LB	3	0	REV 7243	9525009907799
MS20995NC47		96906 WIRE, NONELECTRICAL -NICKEL QQ-N-281 CLASS A FORM 7 ANNEALED	LB	3	0	REV 7243	9525004091866
MS20995NC51		96906 WIRE, NONELECTRICAL -CLASS A, FORM 7, 0.051 DIA 1 LB. PER RL	LB	3	0	REV 7273	9525005299196
MS20995N32	96906	WIRE, NONELECTRICAL -STD 3 USE QQW390	RO				

Downloaded from http://www.everyspec.com

CONSUMABLE ITEMS PART 1

PIN	FSCM	NOMENCLATURE	UM	EC	SL	ADDITIONAL INFO	NSN
MS23562-4	96906	THINNER, DOPE AND LA -55 GL DRUM	GL	3	7	REV 6357, 7257	8010001605789
MS3367-1-0	96906	STRAP,TIEDOWN,ELECT - 190 WT, 6 IN LT, BLACK, BUNDLE OF 100	EA	3	0	REV 7272	5975009846582
MS3367-1-6	96906	STRAP, TIEDOWN, ELECT -PLASTIC, POLYMIDE, BLUE COLOR ,100 PER PACK, BODY LG 6 30 IN	HD	3	0	REV 7275	5975009353942
MS3367-1-9	96906	STRAP, TIEDOWN, ELECT -100 PER PACK	HD	3	0	REV 7243	5975000742072
MS3367-2-0	96906	STRAP, TIEDOWN, ELECT -100 PER PACK	HD	3	0	REV 7243	5975008994606
MS3367-2-9	96906	STRAP, TIEDOWN, ELECT -100 PER PACK	HD	3	0	REV 7243	5975001563253
MS3367-3-0	96906	STRAP,TIEDOWN,ELECT - 188 WD, .083 THK, 12 IN LT, BUNDLE OF 100	EA	3	0	REV 7273	5975009856630
MS3367-3-4	96906	STRAP, TIEDOWN, ELECT -PLASTIC POLYMIDE, YELLOW COLOR, 12 IN BODY LG	EA	3	0	REV 7280	5975003688648
MS3367-3-9	96906	STRAP, TIEDOWN, ELECT -REV 7243	HD	3	0		5975004515001
MS33674-0	96906	STRAP, TIEDOWN, ELECT -	EA	1	0	REV 6230	5975009032284
MS33674-0	96906	STRAP, TIEDOWN, ELECT -	EA	1	0	REV 6230	5975009032284
MS3367-42	96906	STRAP, TIEDOWN, ELECT -PLASTIC NYLON, COLOR RED, BODY LG 2 72 IN	HD	3	0	REV 7280	5975009032288
MS336748	96906	STRAP, TIEDOWN, ELECT -CONFORMS MS3367-4-8, 100 PER BUNDLE	EA	3	0	REV 7237	5975000824778
MS336749	96906	STRAP, TIEDOWN, ELECT -REV 7243	HD	3	0		5975007275153
MS3367-5-9	96906	STRAP, TIEDOWN, ELECT -100 PER PACK	HD	3	0	REV 7243	5975001113208
MS3367-0	96906	STRAP, TIEDOWN, ELECT -1 00 PER PACK	HD	3	0	REV 7243	5975010482922
MS3367-9	96906	STRAP, TIEDOWN, ELECT -100 PER PACK	HD	3	0	REV 7243	5975001338696
MS3367-7-9	96906	STRAP, TIEDOWN, ELECT -100 PER PACK	HD	3	0	REV 7243	5975005709598
MS3368-1-9A	96906	STRAP, TIEDOWN, ELECT -100 PER PACK	EA	3	0	REV 7243	5975009441499
MS3368-5-9E	96906	STRAP, TIEDOWN, ELECT -100 PER PACK	HD	3	0	REV 7243	5975004823954

Downloaded from http://www.everyspec.com

CONSUMABLE ITEMS PART 1

P/N	FSCM	NOMENCLATURE	UM	EC	SL	ADDITIONAL INFO	NSN
MS35524-2	96906	ENAMEL	QT	1	6	REV 6230	8010002970546
MS35626-4	96906	THINNER, DOPE AND LA -55 GL DRUM	GL	3	7	REV 7280	8010001605789
MS35635-1	96906	SHELLAC, CUT -TY 2, GR A, ORANGE, 1 PT CAN	PT	3	4	REV 7275	8010001615681
MS35636-1	96906	VARNISH, OIL -1 QT CAN	QT	3	6	1 QT CN CONSUMABLE FOR TM 55-1520-210-23-1	8010002212809
MS35636-1	96906	VARNISH, OIL -1 QT CAN	QT	3	6	REV 8036	8010002212809
MS63021-13	96906	SOAP, TOILET -55 GL DRUM	GL	3	6	REV 7237	8520001412519
MS70T09-S	07099	TAPE, INSULATION, ELE -	FT	1	5	REV 6231	5970009559976
MS90376-12R	96906	CAP, PROTECTIVE, DUST -	EA	1	0	REV 6232	5340002138881
MS90376-18R	96906	CAP, PROTECTIVE, DUST EACH	EA	3	0	REV 7211	5340001930783
MS90376-18R	96906	CAP, PROTECTIVE, DUST -	EA				
MS9226-01	96906	WIRE, NONELECTRICAL -1422 FOOT SPOOL	LB	3	0	REV 6357, 7239	9505008659694
MS9226-03	96906	WIRE, NONELECTRICAL -MS9226-03 STEEL ANS 5687, 558 FOOT SPOOL	LB	3	0	REV 6357, 7239	9505008782958
MS9226-04	96906	WIRE, NONELECTRICAL -MS9226-04 STEEL AMS 5687, 3410 FOOT SPOOL	LB	3	0	REV 6357, 7239	9505009953177
M209S	22527	METHYL ETHYL KETONE -	GL				
M23053/1-101-0	81349	INSULATION SLEEVING -MIL-I-23053/1 CLASS 1 CORROSION AND FLAME RESISTANT	FT	3	0	REV 7240	5970000631500
M23053/5-108-0	81349	INSULATION SLEEVING -WALL THICKNESS 022- 028, ID 0250- 500,CLASS 1, BLACK	IN	3	0	REV 7273	5970008122967
M23053/5-110-9	81349	INSULATION SLEEVING -CLASS 1.WALL THICKNESS .030- 040, ID .500-1 000, WHITE	IN	3	0	REV 7273	5970008222775
M34H	21361	CLEANING COMPOUND -	GL				
M5501/3-R4	81349	CAP, PROTECTIVE, DUST EACH	EA	3	0	REV 7224	5340011122822

Downloaded from http://www.everyspec.com

CONSUMABLE ITEMS PART 1

P/N	FSCM	NOMENCLATURE	UM	EC	SL	ADDITIONAL INFO	NSN
M5501/3-R8	81349	CAP, PROTECTIVE, DUST -	EA	1	0	REV 6231 6302	5340010304467
M5501/7-F10	81349	CAP-PLUG, PROTECTIVE -EACH	EA	3	0	REV 7223	5340010854234
M5501/7-F5	81349	CAP-PLUG, PROTECTIVE -EACH	EA	3	0	REV 7223	5340011040373
M5501/9-F7	81349	CAP, PROTECTIVE, DUST -EACH	EA	3	0	REV 7223	5340011706662
M5501/9-F7	81349	CAP, PROTECTIVE, DUST -	EA	1	0	REV 6231	5340011706662
M5501/9-F7	81349	CAP, PROTECTIVE, DUST -	EA	1	0	REV 6231	5340011706662
M5501/9-F7	81349	CAP, PROTECTIVE, DUST -	EA	1	0	REV 6231	5340011706662
M81309B2	81349	CORROSION PREVENTIV -TYPE 3 AND CLASS 2, 16 OZ AEROSOL CAN	OZ	3	4	REV 6357,7257	8030005468637
M81786/10-4	81349	INSULATION SLEEVING -FOOT	FT	3	0	REV 7224	5970010387449
NAS813-12	80205	CAP, PROTECTIVE, DUST -	EA	1	0	REV 6232	5340002138881
NAS814-8	80205	CAP, PROTECTIVE, DUST -	EA				
NAS816-158	80205	CAP-PLUG, PROTECT -1 649 IN ID, 625 IN SHOULDER	EA	3	0	REV 7274	5340008150890
NDC000046007104	98377	PROTECTIVE SKIN CRE -4 OZ TUBE	OZ	3	0	REV 7157	6505010416902
NOXRUST518CODER62-203-1	02847	LUBRICATING OIL -	OZ				
NUOCURE 28	99559	STANNOUS ETHYLHEXOA -50 LB CAN	LB	3	S	50 LB CN CONSUMABLE FOR TM 55-1520-210-23-1	6810005464853
O-A-451	81348	AMMONIUM HYDORXIDE, -32 OUNCE BOTTLE	QT	1	0	REV 7229	6810005272476
O-A-451	81340	AMMONIUM HYDROXIDE, -TYPE 1, 16 OZ PT BOTTLE	PT	3	0	REV 7257	6810005843793
O-A-51	81348	ACETONE, TECHNICAL --	PT	1	7	16 OUNCE CAN	6810002232739
O-A-51	81348	ACETONE,TECHNICAL -5 GL CAN	GL	3	7	REV 7261	6810001844796
O-A-51	81348	ACETONE, TECHNICAL -LIQUID 5 GAL CAN	GL	3	7	REV 8036	6810001844796

Downloaded from http://www.everyspec.com

CONSUMABLE ITEMS PART 1

P/N	FSCM	NOMENCLATURE	UM	EC	SL	ADDITIONAL INFO	NSN
O-A-548	81348	ANTIFREEZE	GL				
O-A-76	81348	ACETIC ACID GLACIAL -99 5 MIN VOL ACETIC ACID 1 POUND BOTTLE	LB	3	0	REV 7273	6810002751215
O-B-41	81348	BATTERY WATER -5 GALLON BOTTLE	GL	3	0	REV 7218	6810002979540
O-C-1889	81348	CLEANING COMPOUND, S-1 GL CAN	GL	3	6	REV 7253	6850005979765
O-C-265	81348	HYDROGEN PEROXIDE, A -16 OZ BOTTLE	PT	3	H	REV 6357, 7237	6810002331711
O-C-265	81348	DISTILLED WATER, ACS -5 GL POLYETHYLENE DRUM	GL	3	0	REV 7257	6810001071510
O-C-303	81348	CHROMIUM TRIOXIDE, T -5 LB CAN	LB	3	0	REV 7239	6810002646517
O-C-828	81348	CUPRIC SULFATE -5 GL CAN	GL	3	7	REV 7225	
O-D-1271	81348	DIETHYLENETRIAMINE, -O-D-1271 LIQUID, 16 OZ BOTTLE	OZ	3	7	REV 7240	6810009954804
O-D-1271	81348	DIETHYLENETRIAMINE, -16 OZ BOTTLE	OZ	3	7	REV 8036	6810009954804
O-D-1277	81348	DISINFECTANT, GENERA -TYPE 1, 25 LB DRUM	LB	3	0	REV 6357, 7253	6840005513698
O-E-00760	81348	ETHYL ALCOHOL, TECHN -5 GALLON DRUM	GL	3	0	REV 7162	6810008238003
O-E-00760	81348	ALCOHOL, DENATURED -O-E-00760, TY4, 32 OUNCE BOTTLE	PT	3	0	REV 7212	6810002056786
O-F-506	81348	FLUX, SOLDERING -O-F-506 TYPE 1, FORM B, 1 QT CAN	QT	3	0	REV 7161	3439010699176
O-F-506	81348	FLUX, SOLDERING -2 OUNCE CAN	OZ	3	0	REV 7198	3439002554571
O-H-765	81348	HYDROCHLORIC ACID, T -96 OUNCE BOTTLE	OZ	3	6	REV 7211	6810002229641
O-H-765	81348	HYDROCHLORIC ACID, T -96 OZ BOTTLE	PT	3	6	REV 8036	6810002229641
O-M-232	81348	METHANOL, TECHNICAL -5 GL CAN	GL	3	6	REV 7237	6810002756010
O-M-232	81348	METHANOL, TECHNICAL -5 GAL CAN, AGRADE	GL	3	6	REV 7273	6810002756010
O-N-350	81348	NITRIC ACID, TECHNIC -	PT	3	0	16 OZ BT	6810002229655
0-0-670	81348	ORTHOPHOSPHORIC ACI -15 GALLON DRUM	GL	3	0	REV 7211	6810008238004

Downloaded from http://www.everyspec.com

CONSUMABLE ITEMS PART 1

P/N	FSCM	NOMENCLATURE	UM	EC	SL	ADDITIONAL INFO	NSN
O-P-559	81348	POTASSIUM DICHROMAT -5 POUND BOTTLE	LB	3	0	REV 7218	6810002646525
O-P-559	81348	POTASSIUM DICHROMAT -99 0 MIN BY WT 5 LB BOX	LB	3	0	REV 7273	6810002646525
O-S-571	81348	SODIUM CARBONATE, AN -I TYPE OR II TYPE OR III TYPE, 25 LB DRUM	LB	3	0	REV 7271	6810002628567
O-S-576	81348	SODIUM BICARBONATE, -CLASS 2, 1 LB PACK	LB	3	0	REV 7257	6810002646618
O-S-576	81348	SODIUM BICARBONATE, -CLASS 1, 1 LB BAG	EA	3	0	REV 7257	6810002905574
O-S-595	81348	SODIUM DICHROMATE, D -5 POUND BOTTLE	LB	3	0	REV 7211	6810002628566
O-S-598	81348	SODIUM HYDROXIDE, TE -REV 7211	LB	3	6	6810002708177	
O-S-642	81348	SODIUM PHOSPHATE, TR -TYPE 1,100 LB DRUM	LB	3	6	REV 7253	6810001416080
O-S-809	81348	SULFURIC ACID, TECHN -1 CLASS AND 1 TYPE CONFORMS TO MILSTD605, 80 OZ BOTTLE	PT	3	7	REV 6225 REV 7237	6810002271845
O-T-236	81348	TETRACHLOROETHYLENE-O-T-236 GRB, 5 GALLON CAN	GL	3	0	REV 7161	6810008191128
O-T-236	81348	TETRACHLOROETHYLENE-GRADE B, 5 GALLON CAN	GL	3	0	REV 8036	6810008191128
O-T-620	81348	1,1,1-TRICHLOROETHA -TYPE 1, 1 GL CAN	GL	3	9	REV 6357, 7253	6810006640387
O-T-620	81348	1,1,1-TRICHLOROETHA -TY 1,1 GAL CAN	GL	3	9	1 GAL CAN TM 55-1500-34523	6810006640387
O-T-620	81348	1,1,1-TRICHLOROETHA -TYPE 1, 1 GAL CAN	GL	3	9	REV 8036	6810006640387
O-T-620 TY1	81348	1,1,1-TRICHLOROETHA -1,1,1-TRICHLOROETHANE, 32 OUNCE CAN	OZ	3	9	REV 7161	6810002929625
O-T-634	81348	TRICHLOROETHYLENE, T -REV 7229	GL	1	0	1 GL CAN	6810006784418
O-T-634	81348	TRICHLOROETHYLENE, T -TYPE 2, 55 GAL DRUM	GL	3	0	55 GL DR CONSUMABLE FOR TM 55-1520-210-23-1	6810001844800
OAKITE JET STRIPSPECIAL	44389	CLEANING COMPOUND - DR					
OAKITE 214M	44389	CLEANING COMPOUND, A-OAKITE 214M CONFORMS TO MIL-C-43616, CL-1 5 GL CAN	GL	3	0	REV 7224	6850010457929

Downloaded from http://www.everyspec.com

CONSUMABLE ITEMS PART 1

P/N	FSCM	NOMENCLATURE	UM	EC	SL	ADDITIONAL INFO	NSN
OAKITE 214M	44389	CLEANING COMPOUND -	GL				
OC265	81348	METHYL ETHYL KETONE -1 PT CAN	PT	3	0	REV 8039	6810002816929
OC265	81348	BORICACID, ACS -1 LB BOTTLE	LB	3	0	REV 7233	6810002646535
OC265	81348	ETHYL ALCOHOL, ABSOL -ETHYL ALCOHOL ABSOLUTE, 16 OZ BOTTLE	OZ	3	0	REV 7240	6810002645906
OC265	81348	BORIC ACID, ACS -1 LB BOTTLE	LB	3	0	REV 7261	6810002646535
OC265	81348	METHYL ETHYL KETONE -CRYSTAL FORM 1 LB BOTTLE	LB	3	0	REV 7275	6810002816929
OC275	81348	HYDROCHLORIC ACID, P -CLASS 1, 6 LB BOTTLE	LB	3	0	REV 7271	6750002004206
OE760	81348	ALCOHOL, DENATURED -DENATURED FORMULA 3A AND GRADE 3, 55 GL DRUM	GL	3	7	REV 7253	6810002010904
OE780	81348	ETHYLENE GLYCOL MON -16 OZ BOTTLE	OZ	3	0	16 OZ BT CONSUMABLE FOR TM 55-1520-210-23-1	6810002648997
OG491	81348	GLYCEROL, TECHNICAL -1 GAL CAN	GL	3	0	REV 7271	6810002646548
OH-58D	97499	OH-58D	EA	A	0		
OH795	81348	HYDROFLUORICACID,T -1 GLBOTTLE	GL	3	0	REV 7237	6810005434012
ON350	81348	NITRIC ACID, TECHNIC -1 GALLON BOTTLE	GL	3	0	REV 7211	6810002372918
OS809	81348	SULFURIC ACID, TECHN -CL 1 TY II, 1 LB EACH	LB	1	0	REV 7225	6810002518007
OT620	81348	1,1,1-TRICHLOROETHA -O-T-620 TY III, 12 OZ CAN	OZ	3	6	REV 7243	6810009306311
OV-1D	81996	OV-1D -MODEL RECORD FOR OV-1 D CONSUMABLE	EA	A	0		
P-C-111	81348	CARBON REMOVING COM-TY2,5 GAL PAIL	GL	3	7	REV 7275	6850009652332
P-C-437	81348	CLEANING COMPOUND, H-SYMBOL 5190, 125 LB DRUM	LB	3	6	REV 6357, 7253	6850002560157
P-C-437	81348	CLEANING COMPOUND, H -TYPE 1, 150 LB DRUM	LB	3	4	REV 7271	6850009652330
P-C-444	81348	CLEANING COMPOUND, S -TYPE 1, 5 GAL CAN	GL	3	6	REV 7271	6850009652331

Downloaded from http://www.everyspec.com

CONSUMABLE ITEMS PART 1

P/N	FSCM	NOMENCLATURE	UM	EC	SL	ADDITIONAL INFO	NSN
P-C-451	81348	CLOTH,ABRASIVE -P-C-451 TY1 CL1 180 GRIT, 50 SHEETS PER PACKAGE	SH	3	0	REV 7161	5350001925051
P-C-451	81348	CLOTH ABRASIVE -P-C-451 TY1 CL1 240 GRIT, 50 SHEETS PER PACKAGE	SH	3	0	REPLACES H2H701CNCM	5350001619715
P-C-451	81349	CLOTH, ABRASIVE	SH	1	0	REV 6231	
P-C451	81348	ABRASIVE CLOTH A -SET, ASSORTMENT GRIT 120 12 SH, GRIT 100 12 SH, GRIT 80 12 SH	SH	3	0	REV 7240	5350001619066
P-C-451	81348	ABRASIVE CLOTH A -ASSORTMENT, 1TY, 1CL, 4-1/2X5-1/2, 12 SH PER SET (GRIT 30,40,60,	EA	3	0	REV 7273	5350002715950
P-C-458	81348	CLOTH, ABRASIVE -P-C-458, TY1, CL1, 50 SHEETS PER PACK	SH	3	0	REV 7198	5350002210872
P-D-220	81348	DETERGENT, GENERAL P -TYPE 2, 55 GAL DRUM	GL	3	0	55 GL DR CONSUMABLE FOR TM 55-1520-210-23-1	7930005271237
P-D-220	81348	DETERGENT, GENERAL P -NONMEDICATED LIQUI TY2, 55 GAL DRUM	GL	3	0	REV 7275	7930005271237
P-D-410	81348	DISHWASHING COMPOUN -TY°E 2, 1 GL CAN OR PLASTIC BOTTLE	EA	3	0	REV 6357, 7253	7930008804454
P-D-410	81348	DISHWASHING COMPOUN -TYPE 2, 6 LB BOX	EA	3	0	6 LB BOX CONSUMABLE FOR TM 55-1520-210-23-1	7930008804454
P-D-680	81348	DRY CLEANING SOLVEN -P-D-680 TY 2, 5 GL CAN	GL	3	0	REV 7240	6850002745421
P-D-680	81348	DRY CLEANING SOLVEN -P-D-680 TY 1, 55 G DRUM	GL	3	0	REV 7240	6850002858012
P-D-680	81348	DRY CLEANING SOL -TYPE 1, 5 GL CAN	GL	3	0	REV 7253	6850002649038
P-D-680 TY 2	81348	SOLVENT, DRY CLEAN -P-D-680 TYPE 2	GL	3	0	6850002858011	
P-P-101	81348	PAPER, ABRASIVE -P-P-101 320 GRIT, 50 SHEETS PER PACK	SH	3	0	REV 7239	5350010432278
P-P-101	81348	PAPER, ABRASIVE -GR 11/0, 600 GRIT, 9X11 INCHES, 50 SHEETS PER PG	EA		0	REV 7273	5350002247215
P-P-101, 120 GT	81348	PAPER, ABRASIVE -P-P-101,120 GRIT, 50 SHEETS PER PACKAGE	EA	3	0	REV 7161	5350007218115

Downloaded from http://www.everyspec.com

CONSUMABLE ITEMS PART 1

P/N	FSCM	NOMENCLATURE		UM	EC	SL	ADDITIONAL INFO	NSN
P-P-101, 240 GT	81348	PAPER, ABRASIVE SHEETS PER PACKAGE	-P-P-101,240 GRIT, 50	EA	3	0	REV 7161	5350002247207
P-P-101, 600 GT	81348	PAPER, ABRASIVE SHEETS PER PACKAGE	-P-P-101, 600 GRIT, 50	EA	3	0	REV 8039	5350002247215
P-P-1 21	81348	PAPER, ABRASIVE		PG				
P-P-560	81348	POLISH, PLASTIC BOTTLE	-TYPE 1, 1 PINT	PT	3	0	REV 7273	7930011154744
P-S-1792	81348	SOAP, LAUNDRY	-1 TYPE AND 1 CLASS	LB	3	0	100 LB DR CONSUMABLE FOR TM 55-1500-204-25/1	7930005798532
P-S-311 TY2	80244	SCOURING POWDER	-	OZ	3	0	7930002050442	
P-S-620	81349	SOAP, TOILET 100 PER BOX	-P-S-620 6 OZ CAKE,	EA	3	6	REV 7239	8520005316484
P-S-624 TM 55-1520-210-23-1	81348	SOAP, TOILET	-1 GAL CAN	GL	3	6	1 GL CN CONSUMABLE FOR	8520002280598
P-S-624	81349	SOAP, TOILET GAL CAN	-NONMEDICATED TY1,1	OZ	3	6	REV 8039	8520002280598
P-S-624	81348	SOAP, TOILET	-TY2 1 GAL CAN	GL	3	6	REV 7280	8520010587463
P-306	99742	TAPE, PRESSURE SENSI LONG ROLL, NATURAL COLOR	-1 IN WIDE X 100 FT	FT	3	0	REV 7280	7510010098023
PC436	81348	CLEANING COMPOUND, A	-100 LB DRUM	LB	3	0	REV 7253	6850006647530
PC451	81348	CLOTH, ABRASIVE 120 GRIT, 9 X 11 IN SHEET 50 PER PG	-TYPE 1 AND CLASS 1,	EA	3	0	9XII SH 50 SH PER PG CONSUMABLE FOR TM 55-1520-210-23-1	5350006382693
PC451	81348	CLOTH ABRASIVE CLASS 1, SIZE 9XII IN	-GRIT 120, TYPE 1,	EA	3	0	REV 7275	5350006382693
PC451TYPE1CLASS1	81348	CLOTH, ABRASIVE TY1, CL1 SIZE 9X11 IN EACH	-GRIT SIZE 36	SH	3	0	REV 7225	5350001929319
PD680	81348	DRY CLEANING SOLVEN	-TYPE 2,1 PTCAN	PT	3	0	REV 7254	6850001104498
PED30-40	81230	GREASE, AIRCRAFT	CN					
PED3337	81230	HYDRAULIC FLUID	QT					
PED3565	81230	HYDRAULIC FLUID	OT					

Downloaded from http://www.everyspec.com

CONSUMABLE ITEMS PART 1

P/N	FSCM	NOMENCLATURE	UM	EC	SL	ADDITIONAL INFO	NSN
PENOLA ANDOC C	81230	GREASE, AIRCRAFT CN					
PETROFLUID4607	86459	HYDRAULIC FLUID QT					
PETROFLUID5606B	86459	HYDRAULIC FLUID QT					
PETROTECT800	86459	LUBRICATING OIL OZ					
PLASTILUBEMOLY3	02307	GREASE, GENERAL PURP -14 OZ CARTRIDGE	OZ	3	7	REV 7157	9150001414481
PLASTILUBEMOLY3 FOR TM 55-1520-210-23-1	02307	GREASE, GENERAL PURP -14 OZ CARTRIDGE	OZ	3	7	14 OZ CARTRIDGE CONSUMABLE	9150001414481
PLASTISEALF	75165	SEALING, COMPOUND -1 LB CAN	LB	3	0	REV 8039	
PLF1M	06383	STRAP, TIEDOWN, ELECT -1 HD PER PACK	EA	1	0	REV 7232	5975005874871
PLIOGRIP12-3	73842	ADHESIVE -1 GALLON CAN	GL	3	4	REV 7273	8040000187581
PPP-B-0026	81348	BAG, PLASTIC -SIZE,1 0X24 IN, TYPE 2 STYLE 1,60 PER BOX	EA	1	0	REV 7225	8105008224338
PPP-B-1055	81348	CLOTH, ABRASIVE -GRIT 180 FINE, SIZE 9X11 IN, 25 SH PER, BUNDLE	EA	3	0	REV 7350	
PPP-B-26	81348	BAG, PLASTIC -SIZE, 8X81N, 1,000 PER BOX	MX	3	0	REV 7224	8105008377755
PPP-B-26	81348	BAG, PLASTIC -121N X 121N, 500 PER BOX	DZ	3	0	REV 7225	8105008377757
PPP-B-26 TY2ST1	80244	BAG, PLASTIC MX					
PPP-B-636	81348	BOX, SHIPPING -C9, 30 IN LT X 23 IN WD X 4 IN DEPTH, 15 EA PER BUNDLE	EA	3	0	REV 7273	8115002223022
PPP-C-1120	81348	CUSHIONINGMATERIAL -TYPE4ANDCLASSA, 36 IN WIDE X 100 FT ROLL	FT	3	0	REV 7271	8135002929800
PPP-C-1752	81348	CUSHIONING MATERIAL -TYPE 2 AND CLASS 1	FT	3	0	60 FT RO CONSUMABLE FOR TM 55-1500-343-23	8135001805922
PPP-C-850	81348	CUSHIONING MATERIAL -TYPE 1 AND CLASS 1 AND GRADE R, 32 IN 2 66 FT 0 125 TK SHEET	EA	3	0	REV 7271	8135008923917
PPP-F-320	81348	FIBERBOARD, CORRUGAT-TYPE CF, GRADE 200, CLASS DOMESTIC, VARIETY, 57 X 33 5 IN 25 SH	SH	3	0	REV 7271	8135009525418

Downloaded from http://www.everyspec.com

CONSUMABLE ITEMS PART 1

PIN	FSCM	NOMENCLATURE	UM	EC	SL	ADDITIONAL INFO	NSN
PPP-T-0097 TY2CL8	80244	TAPE, PRESSURE SENSI -PPP-T-0097TY2CL8, 1 IN WIDE, 2160 IN ROLL	EA	3	6	REV 7156	7510005824772
PPP-T-42	81348	TAPE, PRESSURE SENSI -	YD				
PPP-T42TY21 INWD	81348	TAPE, PRESSURE SENSI -PPP-T-42 TYPE 2, 1 IN WIDE, 2160 INCH ROLL	YD	3	4	REV 7161	7510002830612
PPP-T42TY21 INWD	81348	TAPE, PRESSURE SENSI -	YD	1	4	REV 6230	7510002830612
PPP-T-60	81348	TAPE, PRESSURE SENSI -	IN				
PPP-T-60	81348	TAPE, PRESSURE SENSI -2 5 IN WIDE OD ROLL	IN	3	4	REV 7232	7510000797905
PPP-T-60	81348	TAPE, PRESSURE SENSI -2 IN WIDE X 180 YD LONG ROLL GREEN COLOR	YD	3	4	REV 7280	7510000745124
PPPC1120	81348	CUSHIONING MATER -TYPE 4 AND GRADE A RED #211059, 2 IN TK x 24 IN WD 6 FT LG	DZ	3	0	2 IN THICK X 24 IN WIDE X 6 FT LONG 12 PER BX	8135006640057
PPPC1797	81348	CUSHIONING MATERIAL 450 FTROLL	FT	3	0	REV 8357, 7257	8135003004904
PPPC843	81348	CUSHIONING MATER -PPPC843 60FT LONG AND 20 IN WIDE AND 1 IN THICK,	FT	3	0	REV 7238	8135006646958
PPPC843	81348	CUSHIONING MATERIAL -TYPE 2 AND CLASS B, 40 IN WIDE X .370 IN THICK X 165 LONG	FT	3	0	40 IN WIDE X 0 370 IN THICK X 165 FT LONG	8135001838814
PPPC843	81348	CUSHIONINGMATERIAL -165FTLONG40 IN WIDE 0 370 THK TY 2 CL B PLASTIC MATERIAL	EA	3	0	REV 7275	8135001838814
PPPP291	81348	FIBERBOARD, CORRUGAT-TYPE 1, 12 IN W X 250 FT L ROLL	FT	3	0	REV 7271	8135007823954
PP101	81348	PAPER, ABRASIVE -P-P-101,80 GRIT, 50 EACH PACK	SH	3	0	REV 7198	5350006199167
PQHYDRAULICFLUID4226	92895	HYDRAULIC FLUID --	QT				
PQRUSTPREVENTIVEN01 72	92895	LUBRICATING OIL --	OZ				
PQTURBINELUBRICANT5247	92895	LUBRICATING OIL --	QT				
PQTURBINELUBRICANT6423	92895	LUBRICATING OIL --	QT				
PQTURBINELUBRICANT6700	92895	LUBRICATING OIL --	QT				
PQTURBINELUBRICANT7731	92895	LUBRICATING OIL --	QT				

Downloaded from http://www.everyspec.com

CONSUMABLE ITEMS PART 1

PIN	FSCM	NOMENCLATURE		UM	EC	SL	ADDITIONAL INFO	NSN
PGTURBINELUBRICANT8878	92895	LUBRICATING OIL	--	QT				
PQTURBINELUBRICANT9595	92895	LUBRICATING OIL	--	QT				
PR-1422 A-1/2 MODEL 655 SEMKIT	83574	SEALING COMPOUND	--	OZ	3			8030007535008
PR-1422 A-2 MODEL 654 SEMKIT	83574	SEALING COMPOUND	--	OZ				
PR-1710	83574	ADHESIVE	--	PT	3	0		8040001429721
PR-420	05027	COATING COMPOUND, ME-1 PT KIT		PT	3	4	REV 7240	8030005755985
PR-9021 B-2	83574	SEALING COMPOUND 1 GALLON KIT	-TAN COLOR, PASTE,	GL	3	0	REV 7273	8030010589968
PROSEAL 501	83527	ADHESIVE	-400 GRAM KIT	GM	3	2	REV 7273	8040001267798
PROSEAL 584	83527	ADHESIVE	-LIQUID 1 PT CAN	OZ	3	4	REV 7275	8040009646757
PROSEAL 700	83527	SEALING COMPOUND WIREQ CATALYST KIT	-1 PT CAN OF BASE	PT	3	2	REV 7280	8030007235345
PROSEAL 706 B-2	83527	SEALING COMPOUND -PROSEAL70682 CLASS B-2, 1/2 PT SEALANT & 1/2 PT JAR		PT	3	4	REV 7239	8030006169191
PROSEAL 706 B-2	83527	SEALING COMPOUND PT CATALYST KIT CL 8-2	-1/2 PT SEALANT 1/2	PT	3	4	REV 7280	8030006169191
PROSEAL 719 B-1/2	83527	SEALING COMPOUND	-TAN	GL	3	0		8030011059100
PROSEAL596	83527	ADHESIVE		QT	4			8040001658614
PROTEK-SORB 121	16210	DESICCANT, ACTIVA	DR					
PR1422A1-2MODEL655	83574	SEALING COMPOUND		OZ	3			8030007535008
PR1422A2KT50	83574	SEALING COMPOUND	OZ					
PR1436G	83574	SEALING COMPOUND	GL					
PR1436GSPRAYABLE	83574	SEALING COMPOUND	GL					
PR146	83574	1,1,1 -TRICHLORO		OZ				
PS411TYPE1	81348	SKIN PROTECTIVE COM	-TYPE 1, 1 LB JAR	LB	3	5	REV 7261	6850002444893
PX7-IPOUNDCAN	K6231	PETROLATUM, TECHN	-	LB	1	6	REV 6230	9150002500926

Downloaded from http://www.everyspec.com

CONSUMABLE ITEMS PART 1

P/N	FSCM	NOMENCLATURE	UM	EC	SL	ADDITIONAL INFO	NSN
P069-1	80132	SHIPPING AND STORAG -EACH	EA	1	0	REV 8039	8145002609556
P069-1	80132	SHIPPINGANDSTORAG -EACH	EA	3	0	REV 7219	8145002609556
P069-6	80132	SHIPPINGANDSTORAG -EACH,5 INDEEP X 142 50 IN WIDE X 20 250 IN LONG, GRAY PLASTIC	EA-	3	0	REV 7198	8145010124088
P41422A2MODEL654	83574	SEALING COMPOUND -	OZ				
P5006-4G	81755	CORD, FIBROUS -OLIVE DRAB, TY3, 0 188 DIA 400 YD SPOOL	YD	3	0	REV 7275	4020002460688
QQ-A-1876	81348	METAL FOIL ALUMINUM -TY 1 GR B, 75 FT 12 IN WD ROLL	FT	3	0	REV 7272	9535005412453
QQ-A-18761	81348	METAL FOIL - 0035 INCHES THICK, 36 INCHES WIDE, 250 FOOT ROLL	FT	3	0	REV 7273	9535007529061
QQ-B654	81348	BRAZING ALLOY, SILVE -0 063 DIA WIRE GR 1V BRAZING ALLOY, SILVER	TO	3	0	REV 7280	3439002624188
QQ-S-571	81348	SOLDER, TIN ALLOY -	LB				
Q0-S-571	81348	SOLDER, TIN ALLOY -5 LB SPOOL	LB	3	0	REV 7239	3439002243567
QQS571	81348	SOLDER, LEAD-TIN ALL -O 0631N., 5LB SPOOL	LB	3	0	REV 7275	3439001418244
QQN281	81348	WIRE, NONELECTRICAL -NICKEL QQ-N-281 CL A 032 DIA FORM 7 CONDITION ANNEALED	LB	3	0	REV 8039	9525008033044
QQN281	81348	WIRE, NONELECTRICAL -	FT	3	0	REV 6232, 7243	9525004091866
QQN281	81348	WIRE, NONELECTRICAL -DIA.032, CLASS A, FORM 7, 51 LB PER SL	LB	3	0		
QQS561	81348	BRAZING ALLOY, SILVE -COMPOSITON NO. FS/BCP-5	TO	3	0	CONSUMABLE FOR TM 55-1500-204-25/1	3439000521899
OQS571	81348	SOLDER, LEAD-TIN ALL -3% SN 47% LEAD ROSIN GORE 5 LB ROLL UNIT ISSUE	LB	1	0	REV 7229	3439000433623
QQW390	81348	WIRE, NONELECTRICAL -366 FT ROLL	LB	3	0	REV 6204, REV 7156	9525005290442
QQW423	81348	WIRE, NONELECTRICAL -	LB				
QQW423	81348	WIRE, NONELECTRICAL -	LB				

Downloaded from http://www.everyspec.com

CONSUMABLE ITEMS PART 1

P/N	FSCM	NOMENCLATURE		UM	EC	SL	ADDITIONAL INFO	NSN
OQQW423	81348	WIRE, NONELECTRICAL	-	FT				
QQW423	81348	WIRE, NONELECTRICAL COMPOSITION AND A CONDITION, 5 LB SPOOL	-QQW423 302	LB	1	0	REV 7239	9505005965101
QQW423COMPFS302-3040R316	81348	WIRE, NONELECTRICAL	-	LB				
QQW461	81348	WIRE, NONELECTRICAL	-	LB				
04-2817	71984	SEALING COMPOUND	-8 OZ CARTRIDGE	OZ	3	2	REV 7224	8030007554760
RETAINING COMPOUND 75	05972	SEALING COMPOUND	--	BT				
REXHIGHTESTLYE	49309	SODIUM HYDROXIDE TE	-	LB				
RM139A	77988	LUBRICATING OIL	--	QT				
RM147A	77988	LUBRICATING OIL	--	QT				
ROYCO	07950	LUBRICATING OIL	--	QT				
ROYCO22S	07950	GREASE, AIRCRAFT	--	CN				
ROYCO308	07950	LUBRICATING OIL	--	OZ				
ROYCO43	07950	GREASE, AIRCRAFT	--	LB				
ROYCO43	07950	GREASE, AIRCRAFT	--	LB				
ROYCO756CC7304	07950	HYDRAULIC FLUID	--	QT				
ROYCO756D	07950	HYDRAULIC FLUID	--	OT				
ROYCO899C915	07950	LUBRICATING OIL	--	QT				
ROYCO899SC	07950	LUBRICATING OIL	--	QT	1	7		
ROYC064C	07950	GREASE, MOLYBDENUM	-	LB				
RP1220	02684	PASTE, ROSIN	-1 QT KIT	QT	3	4	1 QT KT CONSUMABLE FOR TM 55-1520-210-23-1	
RP1257-3A	02684	SEALING COMPOUND	-	GL	3	2	3 GL KIT	8030008913113
RP1257-3A	02684	SEALING COMPOUND BLUE PASTE, 3 GAL KIT, CATALYST INCLUDED	-PLASTIC EPOXY RESIN,	OZ	3	2	REV 8039	8030008913113

Downloaded from http://www.everyspec.com

CONSUMABLE ITEMS PART 1

P/N	FSCM	NOMENCLATURE		UM	EC	SL	ADDITIONAL INFO	NSN
RTV102	01139	ADHESIVE 12 OZ CARTRIDGE	-MIL-A-46106 TY1,	OZ	3	4	REV 7233	8040002254548
RTV103	01139	ADHESIVE	-12 OUNCE CARTRIDGE	OZ	3	4	REV 6225 REV 7218	8040008658991'
RTV106	01139	ADHESIVE	-3 OZ TUBE	OZ	3	4	REV 7243	8040009023871
RTV108	01139	ADHESIVE	-3 OUNCE TUBE	OZ	3	4	REV 7209	8040008430802
RTV108-2 8OZ	01139	INSULATING COMPOUND RESISTANT PASTE NONCORROSIVE, 2.8 OZ TUBE	-MOISTURE AND OIL	OZ	3	H	REV 7243	5970001345951
RTV133	01139	ADHESIVE BLK, U/I 12 OZ CARTRIDGE	-MIL-A-46146, TY1,	OZ	3	2	REV 7272	8040011680077
RT403C	77988	ASSEMBLY FLUID	-4 OUNCE TUBE	OZ	3	Q	REV 7218	9150001595012
RUSTFOIL2675	84591	LUBRICATING OIL	--	OZ				
RUSTLICK606	14098	CORROSION PREVENTIV	-5 GALLON PAIL	GL	3	0	REV 8039	6850000662333
RUSTLICK606	14098	CORROSION PREVENTIV	-5 GAL CAN	GL	3	0	5 GL CN CONSUMABLE FOR TM 55-1520-210-23-1	6850000662333
RUSTLICK606	14098	CORROSION PREVENTIV	-5 GAL PAIL	GL	3	0	REV 7280	6850000662333
S-1009	06090	ADHESIVE	-300 GRAM KIT	GM	3	4	REV 7253	8040001817201
S-8275G	64484	BOTTLE, SCREW CAP	-GLASS, 16 OZ CAPACITY	EA	3	0	REV 7274	6640004040660
SAT07377	59595	LUBRICATING OIL	QT					
SAT07730	59595	LUBRICATING OIL	--	QT				
SAUEREISEN19	80703	ADHESIVE	-1 QT CAN	OT	3	2	1 OT CN CONSUMABLE FOR TM 55-1520-210-23-1	
SAUEREISEN19		80703 ADHESIVE FORM, 1QT CAN	-WHITE, PASTE	OZ	3	2	REV 8039	
SCOTCH-BRITE-63	27293	PAD, SCOURING	-10 EACH BOX	EA	3	0	REV 7161	7920011465127
SERMASEAL570A	78710	SEALING COMPOUND	-1 GL CAN	GL	1	0	REV 7223	8030011236659
SERMETEL W	78710	CORROSION PREVENTIV	-1 GL CAN	GL	1	4	REV 7223	8030001450039
SHELLAIRCRAFTTURBINEOIL551	54527	LUBRICATING OIL	--	QT				

Downloaded from http://www.everyspec.com

CONSUMABLE ITEMS PART 1

P/N	FSCM	NOMENCLATURE		UM	EC	SL	ADDITIONAL INFO	NSN
SILASTIC 732 RTV	71984	SEALANT, SILICONE	-8 OZ TUBE	OZ	1	0		
SJ8561	52152	PLASTIC STRIP, PRESS FT LONG	-2 IN WIDE AND 108	YD	3	0	REV 7240	9330001696407
SJ8561	52152	PLASTIC STRIP, PRESS THICK AND 108 IN LONG ROLL	-2 IN WIDE AND 0 014	YD	3	0	REV 7240	9330001696407
SJ8561	52152	PLASTIC STRIP, PRESS WIDE, 36 YD ROLL	-CLEAR, 2 INCHES	YD	3	0	REV 8039	9330001696407
SL-5	15674	FUSIBLE WEB WT, 200 YD RL	-POLYAMIDE, 40 IN	YD	3	0	REV 7272	8040011462656
SM2071-05-45	35351	ADHESIVE	--	QT				
SM8539-1	04614	ADHESIVE	-1 PT CAN	PT	3	4	1 PT CN CONSUMABLE FOR TM 55-1520-210-23-1	8040009646757
SM9060-3	04614	SEALING COMPOUND	--	CC	1	6	REV 6230	8030009647537
SM9060-3	91547	SEALING COMPOUND	--	CC				
SNS60WRAP30 063 1 LB	81348	SOLDER, TIN ALLOY RAFLUX TY AND CORE COND AND FLUX PCT P3	-COMP SN60 FORM W	LB	3	0	REV 7243	3439002699610
SN60WRMAP2 0.0361 LB	81348	SOLDER, TIN ALLOY	-POUND	LB	3	0	REV 7219	3439004535472
SN60WRP2 0 031 1LB	81348	SOLDER, TIN ALLOY	-1 LB SPOOL	LB	3	0	REV 7156	3439005554629
SPL 26A	34227	LUBRICANT, SOLID FIL	-OZ	3	H		REV 6232	9150001682000
SR529-1 GAL	01139	ADHESIVE	-5 GALLON CAN	GL	4		REV 7273	8040001490136
SR529/SRC18	01139	ADHESIVE	-1 QT KIT	EA	3	2	REV 7274	
SS-C-266	81348	CHALK MARKING BOX, COLOR WHITE	-GR A COMP 1 144 PER	EA	3	0	GR CONSUMABLE FOR TM 55-1500-204-25/1	7510002236706
SS-P-201	81348	PENCIL COLORED LEAD 12 TO THE WRAPPER	-TY 1 CL 1 YELLOW	EA	3	0	7510002855832	
SS-P-821 GRFFF	80244	PUMICE, TECHNICAL	-1 POUND	LB	3	0	REV 7157	5350001619033
SS-S-736	81348	STONE, SHARPENING	-TY 2 CL B STYLE 4	EA	3	0	REV 7280	5345002436087
SS-S-736 TY2CLBST	80244	STONE, SHARPENING	--	EA				

Downloaded from http://www.everyspec.com

CONSUMABLE ITEMS PART 1

P/N	FSCM	NOMENCLATURE		UM	EC	SL	ADDITIONAL INFO	NSN
SSG659	81348	GRAPHITE, DRY	-1 LB CAN	LB	3	0	REV 7271	9620002336712
SSS736	81348	STONE, SHARPENING CLASS A-2, 4 IN LG X 1 IN WD .125 TK	-TYPE 2 & STYLE 6 &	EA	3	0	4 IN LONG X 1 IN WIDE X 0 125 THICK	5345001446894
SSS736	81348	STONE, SHARPENING STYLE 6	-TY 2 CLASS A-2	EA	3	0	REV 7280	5345001446894
SSS736TYPE2CLASSASTYLESSIZE5		81348	STONE, SHARPENING	-	EA			
SST1 M-CO	06383	STRAP, TIEDOWN, ELECT	-	EA	1	0	REV 6230	5975009032284
STA-LOK PRIMER F	27079	PRIMER, SEALANT	--	OZ				
STAUFFERAEROHYDROIL500	97854	HYDRAULIC FLUID	--	QT				
STAUFFERJET11	07950	LUBRICATING OIL	--	OT				
STO21919	85239	LUBRICATING OIL	--	QT				
STO21919A	85239	LUBRICATING OIL	--	QT				
STO6530	85239	LUBRICATING OIL	--	QT				
STRIPPER 156	44389	CLEANING, COMPOUND	-	GL	3	0		6850012687367
S1607-7021	78286	PARTS KIT, REPAIR, FI REPAIR	-KIT FIBERGLASS	EA	3	M	REV 7240	1560008569222
S1 67 GRADE A	81039	SEALING COMPOUND	--	CC				
S215	73159	THINNER, SYNTHETIC R	-1 GL CAN	GL	3	7	REV 7224	8010001490202
S237-6973-160Z	48294	CLEANING COMPOUND, S	-	OZ	1	0	REV 6230	6850001053084
S237-6973-160Z	54418	CLEANING COMPOUND, S	-	OZ	1	0	REV 6230	6850001053084
S282	22527	SODIUM CYANIDE, TECH	-5 LB BOTTLE	LB	3	0	5 POUND BOTTLE	6810002812039
S8275G	64484	BOTTLE, SCREW CAP	-GLASS, 32 OZ CAPACITY	EA	3	0	REV 7274	6640004040660
T-C-571	81348	CORD, FIBROUS SIZE 12 COLOR NATURAL	-T-C-571 TY 1 CL 2	FT	3	0	REV 7240	4020002402142
TECTYL800	72527	LUBRICATING OIL	--	OZ				
TECTYL893	72527	LUBRICATING OIL	--	OZ				

Downloaded from http://www.everyspec.com

CONSUMABLE ITEMS PART 1

P/N	FSCM	NOMENCLATURE	UM	EC	SL	ADDITIONAL INFO		NSN
TEMPLUBE124	76641	GREASE, AIRCRAFT	LB					
TEMPLUBE124	76641	GREASE, AIRCRAFT	LB					
TETRAETCH20ZBT	17217	ETCHING SOLUTION	-2 OZ CAN	OZ	3	F	REV 7275	6850004318662
THERMOLET188	94858	TEMPERATURE INDICAT FAHRENHEIT	-1 TUBE, 188 0 DEG	EA	3	0	REV 7238	6685009380435
TL5874	59595	HYDRAULIC FLUID	--	QT				
TL8090	59595	LUBRICATING OIL	QT					
TT-E-001384	81348	ENAMEL CAN	-CL 2, 16 OZ SPRAY	PT	3	6	REV 7275	8010001594519
TT-E-527	81348	ENAMEL COLOR 37038 BLK, 1 QT CAN	-TT-E-527 COMP L	QT	3	6	REV 7157	8010002970546
TT-11795	81348	INK.MARKINGSTENCIL	- 250GALLON CAN	QT	3	4	REV 7217	7510001610813
TT-1-1795 16 OZ CAN	81348	INK MARKING STENCIL	-TT-1-1795 TYPE 1,	PT	3	4	REV 7239	7510002246732
TT-1-531	81348	INK. DRAWING		DZ	3	6	1 OUNCE BOTTLE	7510002330546
TT-1-544	81348	INK. MARKER, FELT TIP	-4 OZ CAN	DZ	3	0	REV 7271	7510002814432
TT-L-20	81348	LACQUER LUSTERLESS, 1 OT CAN	-RED COLOR #31136	OT	3	6	REV 7271	8010005151568
TT-L-20	81348	LACQUER CAN	-GRAY #36231,1 GAL	GL	3	6	1 GAL CAN TM 55-1500-345-23	8010005151568
TT-L-20	81348	LACQUER 1 GL CAN	-BLACK, COLOR 37038,	GL	3	6	REC 7273	8010006647651
TT-L-32	81348	LACQUER #17178, 12 OZ PASTE AND CLEAR TO MK 1 GL	-TY 2 ALUMINUM COLOR	GL	3	6	12 OZ PASTE AND CLEAR LACQUER TO MAKE 1 GAL TM 55-1500-345-23	8010002418406
TT4261	81348	METHYL ETHYL KETONE	-1 GALLON CAN	GL	3	0	REV 7157	6810002812785
TT-M-261	81348	METHYL ETHYL KETONE	-5 GL CAN	GL	3	0	REV 7237	6810002812762
TT-M-261	81348	METHYL ETHYL KETONE	-5 GL CAN	GL	3	0	REV 8039	6810002812762
TT-N-95 TY2	81348	NAPHTHA, ALIPHATIC	-1 GALLON CAN	GL	3	7	REV 7161	6810002388119

Downloaded from http://www.everyspec.com

CONSUMABLE ITEMS PART 1

P/N	FSCM	NOMENCLATURE		UM	EC	SL	ADDITIONAL INFO	NSN
TT-N-97	81348	NAPHTHA, AROMATIC MIL-N-15178 REPLACE WITH TT-N-97	-1 GL CAN	GL	3	7	REV 7057 REV 7233	6810002239067
TT-P-1757	81348	PRIMER COATING COLOR T, 1 GALLON CAN	-TT-P-1757 COMP L	GL	3	6	REV 8039	8010005825318
TT-P-1757	81348	PRIMER COATING AND Y COLOR, 16 OZ AEROSOL CAN	-TT-P-1757 L COMPOSITION	PT	3	6	REV 7239	8010002970593
TT-P-1757	81348	PRIMER COATING COMPOSITION L COLOR T. 16 OZ AEROSOL CAN	-TT-P-1757	OZ	3	6	REV 7243	8010008998825
TT-P-1757	81348	PRIMER COATING L COLOR T, 1 OT CAN PRESSURIZED	-TT-P-1757 COMPOSITION	OZ	3	6	REV 7243	8010008990931
TT-P-1757	81348	PRIMER COATING COLOR	-L COMPOSITION AND Y	GL	3	6	1 GL CN CONSUMABLE FOR TM 55-1500-333-24	8010005152208
TT-P-1757	81348	PRIMER COATING COLOR T, 1 GALLON CAN	-COMPOSITION LAND	GL	3	6	REV 7273	8010005825318
TT-P-1757	81348	PRIMER COATING	-1 PTCAN	PT	3	6	REV 7280	8010005825318
TT-P-381	81349	PIGMENT, IRON BLUE TUBE	-BLUE COLOR 2A 2 OZ	OZ	3	7	REV 8039	8010005510128
TT-P-381	81348	PIGMENT, IRON BLUE	-2 OZ TUBE COLOR 2A	OZ	3	7	REV 7280	8010005510128
TT-R-230	81348	REMOVER, PAINT	-CLASS 1,400 LB DRUM	LB	3	6	REV 7253	8010002271693
TT-R-248	81348	REMOVER, PAINT	-5 GL PAIL	GL	3	4	REV 7243	8010005152258
TT-R-251	81348	REMOVER, PAINT	-TT-R-251 TY4 CLB	GL	3	6		8010009264727
TT-S-1732	81348	SEALING COMPOUND	-1/2 PT CAN	PT	3	4	REV 7240	
TT-S-1732	81348	SEALING COMPOUND	-1/2 PT CAN	PT	3	4	REV 8039	8030002098005
TT-T-291 PAIL	81348	THINNER, PAINT, MINER	-TT-T-291 TY 1, 5 GL	GL	3	7	REV 7243	8010005587026
TT-T-291	81348	THINNER, PAINT, MINER	-TY1, 1 GL CAN	GL	3	7	REV 7280	8010002422089
TT-T-548	81348	TOLUENE, TECHNICA	-5 GL CAN	GL	3	7	REV 7253	6810002900048
TT-V-119	81348	VARNISH, OIL	--	GL	3	6	1 GL CAN	8010005977856

Downloaded from http://www.everyspec.com

CONSUMABLE ITEMS PART 1

P/N	FSCM	NOMENCLATURE	UM	EC	SL		ADDITIONAL INFO	NSN
TT-V-119	81348	VARNISH, OIL	-1 GL CAN	GL	3	6	REV 7275	8010005977856
TT-X-916	81348	XYLENE, TECHNICA	-	GL				
TTE751	81348	ETHYLACETATE, TECHN	-5 GAL CAN	GL	3	5	REV 7271	6810002456694
TTE776	81348	ETHYLENE GLYCOL MON	-1 GL CAN	GL	3	0	REV 7233	6810002812001
TT1735	81348	ISOPROPYL ALCOHOL, T	-REV 7211	GL	3	0	6810008556160	
TT1735	81348	ISOPROPYL ALCOHOL, T	-GRADE A, 32 OZ CAN	EA	3	0	REV 7254	6810009838551
TT1735	81348	ISOPROPYL ALCOHOL, T	-GRADE A, 8 OZ CAN	OZ	3	0	REV 7254	
TTI735	81348	ISOPROPYL ALCOHOL, T	-GRADE A, 1 GL CAN	GL	3	0	REV 7254	6810002865435
TTM261	81348	METHYL ETHYL KETONE	-55 GL DRUM	GL	3	0	REV 7243	6810002812763
TTP385	81348	PIGMENT, IRON BLUE	-DRY TYPE	LB	3	7	8010000078164	
TTS271	81348	SHELLAC, DRY	LB					
TTT548	81348	TOLUENE, TECHNICAL	-32 OZ CAN	OZ	3	7	REV 7243	6810005798431
TTT548	81348	TOLUENE, TECHNICAL	-1 GL CAN	GL	3	7	REV 7253	6810002812002
TTT548	81348	TOLUENE, TECHNICAL	-1 GL CAN LIQUID	GL	3	7	REV 7280	6810002812002
TTT548	81348	TOLUENE, TECHNICAL	-1 GAL CAN	GL	3	7	REV 7280	6810002812002
TUFFY	92128	PAD, SCOURING	-	EA	1	0	REV 6232	7920006599175
TURCO HTC	95510	ALKALINE CLEANER	-	LB	3	0	681001H758008	
TURCO 4181	95510	ALKALINE, DESCALER	-125 LB KEG	LB	3	0	REV 7161	6850012138797
TURCO 5975 A	61102	CLEANING COMPOUND	GL					
TURCO5469	61102	REMOVER, PAINT		GL	1	4	REV 6231	8010001817568
TYPE 17-4PH CONDITION A	18702	METAL BAR	-REV 7253	SH	1	0	9510011326622	
TY23MO	22421	STRAP, TIEDOWN, ELECT	-	EA	1	0	REV 6230	5975009032284
TY23MO	59730	STRAP, TIEDOWN, ELECT	-	EA	1	0	REV 6230	5975009032284

Downloaded from http://www.everyspec.com

CONSUMABLE ITEMS PART 1

P/N	FSCM	NOMENCLATURE	UM	EC	SL	ADDITIONAL INFO	NSN
U-T-30	81348	TALCUM POWDER -8OZ BOTTLE	EA	3	7	REV 7156	8510008170295
UH60A	78286	UH-60A	EA	1	0		
UH1H	97499	UH-1H	EA	3	0		
UNIVISJ41	29700	HYDRAULIC FLUID	QT				
UU-C-806	81348	CUP, PAPER -UU-806 TY4, STA, CL3, 1000 PER BOX	EA	3	0	REV 7198	7350009038144
UU-P-268 TY1GRB	80244	PAPER, KRAFT, UNTREAT-25 FT PER ROLL	EA	3	0	REV 7156	8135001607759
UU-S-625	81348	STENCILBOARD -UU-S-625 TY2 GR3, 18 500W X 18.500L X 0 010-0 012 TH, SHEET	SH	3	0	REV 7161	9310002404737
UU-T-106	81348	TAPE PRESSURE SENSI -2160 IN LONG AND 1/2 IN WIDE	EA	3	0	REV 63578	7510010264661
UU-T-595	81348	TOWEL, PAPER -TYPE 6 100 SH PER BOX	SH	3	0	REV 7218	7920008239772
UU-T-91	81348	TAPE PRESSURE SENSI -UU-T-91 TYPE 1 12961N LONG AND 1 IN WIDE	YD	3	0	REV 7239	7510006341549
UUT106	81348	TAPE, PRESSURE SENSI -	YD				
U21A	81996	U21A -MODEL RECORD FOR U-21A CONSUMABLE	E	A	0		
V-T-276	81348	THREAD -COLOR OLIVE DRAB 66022 SIZE 50, TYPE IA3 6000 YD CONE	YD	3	0	REV 7272	8310001873920
V-T-276	81348	THREAD -TY 3A, Z TWIST OLIVE DRAB COLOR ASSN OF US 66022 6000 YDS CON	OZ	3	0	REV 7280	8310001977695
V-T-295	81348	THREAD -V-T-295 TYPE 1 AND CLASS A, 1362 5 YARDS LONG	YD	3	0	REV 7237	8310002271244
V-T-295	81348	THREAD -V-T-295 TY I CL A, SIZE 6, 2520 YARDS LONG	YD	3	0	REV 7243	8310002043749
V-T-295	81348	THREAD -TYPE 1 & CLASS A OLIVE DRAB #66022, 2800 YD TUBE	YD	3	0	2800 YD TU CONSUMABLEW FOR TM 55-1520-210-23-1	8310002622772

Downloaded from http://www.everyspec.com

CONSUMABLE ITEMS PART 1

P/N	FSCM	NOMENCLATURE		UM	EC	SL	ADDITONAL INFO	NSN
V-45D	83014	ADHESIVE USE WITH VELCRO HOOK AND LOOP TAPE	-BUNA-N, 1QT, FOR	OT	3	0	REV 7272	8040012038976
VC3	04866	COATING COMPOUND, PL-4 OUNCE BOTTLE PLASTIC SQUEEZE		EA	3	5	REV 7219	8030001635792
VERSAMIDE125	11884	CATALYST, ADHESIVE	-1 PT	PT	1	4	REV 7229	8040007121419
VERSILOK 204/ACCELERATOR 4	30676	ADHESIVE OZ KIT	-ACRYLIC, OFF WHITE, 3	OZ	3	0	REV 7272	8040011609551
VERSILOK 506/ACCELERATOR 4	30676	ADHESIVE	-ACRYLIC, 3 OZ TUBE	OZ	3	0	REV 7272	8040011703599
VT276 SIZE 16, TUBE	81348	THREAD	-V-T-276 TY IB3,	YD	3	0	REV 6357, 7243	8310005301182
VT276	81348	THREAD SIZE 16, 66043, COND GLAZED, 16 OZ TUBE	-IB3 TY, 4PLY, Z-TWIST,	OZ	3	0	REV 7273	8310005301182
WC846	81348	CUTTING FLUID	-TY 1 55 GAL DRUM	GL	3	7	REV 7280	9150002618144
WCB50	81348	CUTTING FLUID	-GR B TY I 5 GAL CAN	GL	3	7	REV 7280	9150008838478
W-D-1078	81348	DAMPING FLUID	-1 LB CAN	LB	1	6	REV 7229	9150002698246
W-D-1078	81348	DAMPING FLUID	-1 POUND CAN	LB	3	6	1 QT CAN	9150008644973
W-D-1078	81348	DAMPING FLUID	-1 LB CAN	LB	3	6	REV 7273	9150002698246
W-K-211	81348	KEROSINE CAN	-KEROSENE 1 GALLON	GL	1	0	REV 7229	9140002426748
W-L-1071	81348	LUBRICATING OIL, MIN POWDER	-TYPE 1, 5 GL CAN	GL	3	7	REV 7253	9150002402260
W-L-765	81348	LUBRICATING OIL, GEA	-250 GRADE, 1 GAL CAN	GL	3	7	1 GL CN CONSUMABLE FOR TM 55-1520-210-23-1	9150002920097
W-L-800	81348	LUBRICATING OIL, GEN	-4 OZ CAN	OZ	1	6	REV 7156	9150002732389
W-L-800	81348	LUBRICATING OIL, GEN	-16 OZ AEROSOL CAN	QT	3	6	REV 6357,7257	9150004580075
W-L-825	81348	LUBRICATING OIL, REF	-WL825 TYPE 3	QT	3	7	1 QT CAN	9150005982911
W-L-825	81348	LUBRICATING OIL, REF	-TYPE 2	GL	3	7	1 GL CN CONSUMABLE FOR TM 55-1500-204-25/1	9150002929657
W-P-216	81348	PENETRATING OIL	-1 PT CAN	PT	3	7	REV 7223	9150002617899

Downloaded from http://www.everyspec.com

CONSUMABLE ITEMS PART 1

P/N	FSCM	NOMENCLATURE	UM	EC	SL		ADDITIONAL INFO	NSN
W-P-216	81348	PENETRATING OIL	-TY 1, 1 PT CAN	PT	3	7	REV 7275	9150002617899
W-P-236	81348	PETROLATUM, TECHN 50 LB CAN	-W-P-236, TY5, CL2, 1 7	LB	3	6	REV 6225, REV 7156	9150002500926
VV-P-236	81348	PETROLATUM,TECHN 1 750 LB CAN	-CL2 AND TY4,	LB	3	6	REV 7275	9150002500926
W-W-95	81348	WAX, PARAFFIN, TECHNI POUND	-W-W-95, TY1, GRC,	LB	3	7	REV 7212	9160002852048
WB231	81348	BENZENE, TECHNICAL	-GRADE A, 1 GL CAN	GL	3	7	REV 7261	6810002815272
WF800GRADEDFAAR	81348	DIESEL FUEL	-GR DF-A 5 GAL CAN	GL	3	0	REV 7280	9140002865282
VVF800GRADEDF2RE	81348	DIESEL FUEL	-GR DF-2 55 GAL DRUM	GL	3	0	REV 7280	9140002865296
WK211	81348	KEROSINE	--	GL	3	0	REV 7239	9140002426748
WL800	81348	LUBRICATING OIL GEN	-1 QT CAN	OT	3	6	REV 6357, 7257	9150002316689
WL800	81348	LUBRICATING OIL, GEN	-5 GL CAN	GL	3	6	REV 6357, 7257	9150002319062
WVW95	81348	WAX, PARAFFIN, TECHNI 11 LB CAKE	-W-W-95, TY1, GRAA,	LB	3	7	REV 7157	9160002852047
VVW95	81348	WAX, PARAFFIN, TECHNI	GR ATY 1, 1 LB CAKE	LB	3	7	1 LB CAKE TM 55-1500-34523	9160002852044
WD40	09137	CORROSION PREVENTIV	-	OZ	3	4		8030008387789
WW2	99017	CAP-PLUG, PROTECTIVE	-EACH	EA	3	0	REV 7224	5340007922683
WX-1206	61784	PLASTIC STRIP, ADHES ACETONE TY, 026 THK, 5 IN WD, 8FT RL	-ADHESIVE COATED	FT	3	0	REV 7273	9330012028903
XSL7828	54527	HYDRAULIC FLUID	--	QT				
X1170	20999	TAPE, PRESSURE SENSI WITH PRESSURE SENSITIVE ADHESIVE ON	-2 MIL THICK ALUMOIM	EA	3	7	REV 7280	7510004216449
YT283	33870	HYDRAULIC FLUID	--	QT				
Y9132B WIDE ROLL	52152	TAPE, PRESSURE SENSI	-36 YD LONG X 3/4 IN	YD	3	4	36 YD LONG & 0.075 IN WIDE DE RO CONSUMABLE FOR TM 55-1520-210-23-1	7510008782052
Y9132B	52152	TAPE, PRESSURE SENSI LONG ROLL COLOR BLACK	-3/4 IN WD 1296 IN	YD	3	4	REV 7280	7510008782052

Downloaded from http://www.everyspec.com

CONSUMABLE ITEMS PART 1

P/N	FSCM	NOMENCLATURE	UM	EC	SL	ADDITIONAL INFO	NSN
Y9265A	52152	TAPE, PRESSURE SENSI -36 YD LONG X 5 IN WIDE ROLL	YD	3	7	36 YD LONG & 5 IN WIDE RO CONSUMABLE FOR TM 55-1520-210-23-1	7510001450171
Y9265A	52152	TAPE, PRESSURE SENSI -5 IN WD X 36 IN LONG ROLL	YD	3	7	REV 7280	7510001450171
ZL22A	37676	INSPECTION PENETRAN -1 GL CAN	GL	3	0	REV 7223	6850005856425
ZZ-E-00661	81348	ERASER, RUBBER -TYPE 7 AND STYLE A OR STYLE B, 12 EA PER BOX	EA	3	0	REV 7257	7510003238788
ZZ-E-00661	81348	ERASER, RUBBER -TYPE 3 AND CLASS 2 AND STYLE C, 12 EA PER BOX	EA	3	0	REV 7257	7510006197714
0-A-51	81348	ACETONE, TECHNICAL -1 GALLON CAN	GL	3	0	REV 7161	6810010030262
0-A-51	81348	ACETONE, TECHNICAL -5 GALLON CAN	GL	3	7	REV 7238	6810001844796
0-A-76	81348	ACETIC ACID, GLACIAL -5 LB BOTTLE	LB	3	0	REV 7233	6810002751215
0C1889	81348	CLEANING COMPOUND, S -SOLVENT, 55 GAL DRUM	GL	3	3	REV 7273	6850002097947
0-S-576	81348	SODIUM BICARBONATE, -O-S-576, CL2, 1 LB PACKAGE	LB	3	0	REV 7161	6810002646618
0C265	81348	SODIUM CARBONATE, AN -1 LB BOTTLE	EA	3	0	REV 7211	6810002646593
0C265	81348	BORIC ACID, ACS -1 LB BOTTLE	LB	3	0	REV 7233	6810002646535
OE760 PAIL	81348	ALCOHOL, DENATURED -OE760 GRADE 3, 5 GL	GL	3	7	REV 7240	6810002010907
0F498	81348	FLUX, BRAZING -TYPE A, 8 OZ JAR	OZ	3	0	REV 7275	3439009134750
OT620	81348	1,1, 1-TRICHLOROETHA --	OZ	3	6	REV 6232, 7243	6810009306311
005-467-020	13499	ANTISEIZE COMPOUND OZ					
02GY-3	33461	COATING AND SEALANT -1 GL CAN	QT	1	0	REV 7232	8030012575774
020X304	85570	THINNER, SYNTHETIC R --	GL	1	5	REV 6230	8010001818080
02016	10136	CLEANING COMPOUND, S --	OZ	1	0	REV 6230	6850001053084
02016	10136	CLEANING COMPOUND, S --	OZ	1	0	REV 6230	6850001053084
02016	10136	CLEANING COMPOUND, S --	OZ	1	0	REV 6230, 6302	6850001053084

Downloaded from http://www.everyspec.com

CONSUMABLE ITEMS PART 1

P/N	FSCM	NOMENCLATURE		UM	EC	SL	ADDITIONAL INFO	NSN
034-000765	26916	INSULATING COMPOUND	--	KT				
066M	86297	STONE, SHARPENING	--	EA	3	0	5345011032427	
078-21	05972	SEALING COMPOUND	--	CC	3	6	REV 6232, 7243	8030000812326
07821	05972	SEALING COMPOUND	--	CC	3	6	REV 6232, 7243	8030000812326
080894-210	98897	LUBRICANT, SOLID FIL	--	OZ	1	H	REV 6230	9150007540064
08-0988-005	98897	EPOXY COATING KIT	-2 QT KIT	OT	3	6	2 QT KT CONSUMABLE FOR TM 55-1520-210-23-1	8010001519979
08-0988-005	98897	EPOXY COATING KIT 2 QT KIT	-LUSTERLESS BLACK	EA	3	6	REV 7275	8010001519979
080-31	05972	SEALING COMPOUND	-	CC	1	5	REV 6231	8030000812328
08001	04963	ADHESIVE	-REV 7239	OZ	3	0		8040001092481
083-21	05972	SEALING COMPOUND	--	CC	1	6	REV 6232	8030000812331
085-21	05972	SEALING COMPOUND	--	CC	3	6	REV 6232, 7243	8030000812335
08521	05972	SEALING COMPOUND	--	CC	3	6	REV 6232, 7243	8030000812335
08831	05972	SEALING COMPOUND	--	CC	1	5	REV 6230	8030000812338
1 161	52125	PLASTIC STRIP, PRESS LONG ROLL	-1 IN WIDE X 36 YARD	YD	3	0	REV 7280	9330011017505
1 I41NDIA	72205	ROPE, FIBROUS	--	FT	1	0	REV 6230	4020005239641
1A27	99109	INSULATING VARNISH,	-1 OT CAN	QT	3	H	REV 7257	5970009953652
1B15H	99109	INSULATING VARNISH,	-12 OZ AEROSOL CAN	OZ	3	H	REV 7257	5970009904924
10-620	72653	CLEANING COMPOUND	--	CN				
10-70500-12	77820	CAP, PROTECTIVE, DUST	--	EA	1	0	REV 6232	5340002138881
100-476833-002	90073	ACCESS-BULK	--	EA	1	0	DIGITAL DISPLAY PANEL FOR AH-64	
100-476842-001	90073	ACCESS-BULK	--	EA	1	0	INDICATOR, TURBINE GAS TEMP. FOR AH-64	

Downloaded from http://www.everyspec.com

CONSUMABLE ITEMS PART 1

P/N	FSCM	NOMENCLATURE		UM	EC	SL	ADDITIONAL INFO	NSN
100476843-001	90073	ACCESS-BULK	--	EA	1	0	INDICATOR, ENG TORQUE FOR AH-64	
100-476844-001	90073	ACCESS-BULK	--	EA	1	0	INDICATOR, GAS GEN (RPM) FOR AH-64	
100-476845-001	90073	ACCESS-BULK	--	EA	1	0	INDICATOR, FUEL QTY FOR AH-64	
100476847-001	90073	ACCESS-BULK	--	EA	1	0	INDICATOR, OIL PRESSURE FOR AH-64	
100476848001	90073	ACCESS-BULK	--	EA	1	0	INDICATOR, ENG TURBINE/ ROTOR FOR AH-64	
100-476849001	90073	ACCESS-BULK	--	EA	1	0	SIGNAL DATA CONVERTER FOR AH-64	
10511620	19200	LEAD SHOT	-1 WESTERN SHOT	LB	3	0	REV 7280	9650003126640
10587076-3	18876	SEALING COMPOUND	--	CC	1	5	REV 6231	8030000812328
1080	95760	DUMMY CONNECTOR, PLU	-EACH	EA	3	0	REV 7224	5935003529077
11G-1000 SZ8 1/2	44379	RUBBER GLOVES	-SIZE 8-1/2, EACH	EA	3	0	1680011949799	
110128-3	79318	CAP, PROTECTIVE, DUST	-	EA	1	0	REV 6232	5340002138881
12Z12139PC43	10001	CAP, PROTECTIVE, DUST	-EACH	EA	3	0	REV 7223	5340005760780
12Z12139PC43	10001	CAP, PROTECTIVE, DUST	-	EA	1	0	REV 6231	5340005760780
120-OPAQUE WHITE	05820	INSULATING COMPOUND	-	OZ	3	0	REV 7218	5970011003881
120-5	05820	SEALING COMPOUND	-5 OZ TUBE	OZ	1	0	REV 7229	8030010340394
1200 RTV PRIME COAT-CLEAR	71984	PRIMER, ADHESIVE	-1 PINT CAN	PT	3	2	8040008454304	
1202-QT	08800	INSULATING VARNISH,	-1 QT CAN	OZ	3	7	REV 7280	5970002962129
1219270-8	06840	CAP, PROTECTIVE DUST	--	EA				
1219270-8	19315	CAP, PROTECTIVE DUST	--	EA				
1219270-8	55972	CAP, PROTECTIVE DUST	--	EA				

Downloaded from http://www.everyspec.com

CONSUMABLE ITEMS PART 1

P/N	FSCM	NOMENCLATURE	UM	EC	SL	ADDITIONAL INFO	NSN
126020	10138	ACCESS-BULK	EA	1	0	INDICATOR, ATTITUDE FOR AH-64	
1320	07013	ETHYLENE PROPYLENE -SQUARE FOOT	SF	1	1	REV 7232	6810011884522
13213E5171-285	97403	TAPE, PRESSURE SENSI -2160 INCHES ROLL	IN	3	0	REV 7223	7510010645172
1372W	77247	SEALING COMPOUND -10 OZ TUBE	OZ	3	6	REV 7240	8030005997753
139981	66640	CAP, PROTECTIVE, DUST -	EA	1	0	REV 6232	5340002138881
14P1	82146	PETROLATUM, TECHN -	LB	1	6	REV 6230	9150002500926
14556	10138	INSULATING COMPOUND -	OZ	1	0	REV 6231	5970011003881
1465C	73842	ACCELERATOR -1 PINT CAN	PT	3	0	REV 7273	
15 NOF 9W	00768	TAPE, LACING AND TYI -	YD				
15 NOF 9W	00768	TAPE, LACING AND TYI -	YD	1	0	REV 7218	4020011006823
15-0002	26477	LAPPING AND GRINDIN -GRIT 400 METAL WORKING, 40Z JAR ABRAV MAT ALUMINUM OXIDE	OZ	3	0	REV 7280	5350001516111
1659	95746	MAT, REINFORCING, FIB -50 YARD ROLL	YD	3	0	REV 7240	9340011778572
1659	95746	MAT, REINFORCING, FIB -WHITE, 0045 INCH THICK, 2 INCHES WIDE, 54 YD ROLL	YD	3	0	REV 7273	9340011778572
1751 B/A	04963	ADHESIVE -ADHESIVE PLASTIC EPOXY RESIN COLOR ALUMINUM, 1 PT CAN KIT	PT	3	2	REV 7238	8040001236954
1751 B/A	04963	ADHESIVE -ADHESIVE PLASTIC EPOXY RESIN COLOR ALUMINUM, ONE QT CAN	QT	3	2	REV 7238	8040009591854
1751 B/A	04963	ADHESIVE U/I 1 QT KIT, COLOR ALUMINUM	QT	3	2	REV 7272	8040009591854
178D542P29	07482	CAP, PROTECTIVE, DUST -	EA	1	0	REV 6231	5340005760780
178D542P29	89954	CAP, PROTECTIVE, DUST -	EA	1	0	REV 6231	5340005760780
1791K7	39428	TAPE, DUCT -1791K7 2 INCH WIDE	YD	3	0	51 INCHES ROLL	5640001032254
1791K7	39428	TAPE, DUCT --	YD	0			5640001032254

Downloaded from http://www.everyspec.com

CONSUMABLE ITEMS PART 1

P/N	FSCM	NOMENCLATURE		UM	EC	SL	ADDITIONAL INFO	NSN
1800	99189	LAPPING AND GRINDIN	-1 LB CAN	LB	3	0	1 LB CN CONSUMABLE FOR TM 55-1520-238-23	5350001515600
1831	99109	INSULATING COMPOUND	--	KT				
1895C	73842	CEMENT AND ACCELERA	-1 QUART	QT	3	0	REV 7273	8040010289866
194-505-9001	99193	CAP, PROTECTIVE, DUST	--	EA	1	0	REV 6231	5340009177850
1954	80988	ERASER, RUBBER	-12 EA PER BOX	EA	3	0	REV 7257	7510009495055
2	54527	GREASE, AIRCRAFT	--	CN				
2000	09581	PAPER, ABRASIVE	--	EA	1	0	REV 6230	5350002247215
2006	05961	CLEANING COMPOUND	--	DR				
204-040-755-5	97499	LUBRICANT	-6 OZ TUBE	OZ	3	R	REV 7239	9150005068497
205-706-083-1	97499	REPAIR KIT, SUPPRESS	-1 EA KIT	EA	3	0	REV 7275	1560001033459
2107 PER PKG	73685	PENCIL FOR TM 55-1520-210-23-1	-COLOR-YELLOW, 12 EA	EA	3	0	12 EA PER PKG CONSUMABLE	7510004650994
2107	73685	PENCIL CORE 12 TO A PACK	-NON-LEADED YELLOW	EA	3	0	REV 7280	7510004650994
2128A	86460	CLEANING COMPOUND	--	DR				
2170-1	26136	ACCESS-BULK	--	EA	1	0	IND VERT VEL PILOT AH-64	
2172-2	26136	ACCESS-BULK	--	EA	1	0	INDICATOR AIRSPEED AH-64	
222	80769	TAPE, DUCT	YD					
2227	72658	SODIUM CARBONATE, AN	--	EA				
23B28035-5	70167	FASTENER TAPE, HOOK CLASS 1,2 IN WIDE, BLACK, YARD	-MIL-F-21840 TYPE 2 AND	YD	3	0	REV 7239	8315009264931
237-6973-160Z CAN	54418	CLEANING COMPOUND, S	-	OZ	1	0	REV 6230	62850001053084
2380TURBOOILWS600	29700	LUBRICATING OIL	--	QT				
2392TURBOOIL	29700	LUBRICATING OIL	--	QT				

Downloaded from http://www.everyspec.com

CONSUMABLE ITEMS PART 1

P/N	FSCM	NOMENCLATURE		UM	EC	SL	ADDITIONAL INFO	NSN
2393TURBOOIL	29700	LUBRICAING OIL	--	QT				
2395	29700	LUBRICATING OIL	--	QT				
240323	76541	FABRIC, NYLON	-1000 FT ROLL	FT	1	0	REV 7272	
242-21	05972	SEALING COMPOUND	--	CC		0		
24221	05972	SEALING COMPOUND		CC		0		
25-1316-0002	57003	GASKETING, MATERIAL		FT	1	0		
25009-1 GRAY, TY1 CL3, 2 5 OZ KIT	92108	ADHESIVE	-LIQUID, COLOR -	OZ	3	2	REV 7275	8040001520017
251M	27293	KIT, AIRCRAFT CLEANI	-1 KIT	EA	3	0	REV 6357, 7254	7920004906046
26226203-01	99167	CAP, PROTECTIVE, DUST	-	EA	1	0	REV 6231	5340009177850
28B391-2-B	83298	ACCESS-BULK		EA	1	0	GENERATOR FOR AH-64	
299-947-107	97499	ADHESIVE CLASS 5, 1 PT CAN	-299-947-107 TYPE 2	PT	3	4	REV 7239	8040006640439
299-947-107TY1CL1	97499	ADHESIVE		QT	1	4	REV 6203	8040001658614
299-947-125 TY2 CL 2	97499	ADHESIVE	-DARK BLUE, 1 GL KIT	EA	3	4	REV 7274	8040010435423
29994	99167	PLUG, MACHINE THREAD	-	EA	1	0	REV 6231	5365007730760
310AC	76842	CORROSION PREVENTIV	-	QT				
3140 RTV	94499	INSULATING COMPOUND	-3 OZ TUBE	OZ	3	F	REV 7257	5970007913716
3140 RTV LB	71984	INSULATING COMPOUND	-1 LB CAN	LB	3	F	REV 7257	5970001108234
3145 RTV GRAY	71984	ADHESIVE	-3 OZ TUBE	OZ	3	2	REV 7257	8040001450020
3193631	10001	DUMMY CONNECTOR, PLU	-	EA	1	0	REV 6232	5935003529077
321	71984	COATING, MOLYKOTE	OZ					
321R	71984	COATING, MOLYKOTE	OZ					
34	04963	ADHESIVE	-1 GL CAN	GL	3	0	REV 7239	8040011045386

Downloaded from http://www.everyspec.com

CONSUMABLE ITEMS PART 1

P/N	FSCM	NOMENCLATURE	UM	EC	SL	ADDITIONAL INFO	NSN
34310513062	D0483	CAP, PROTECTIVE DUST -	EA				
35	05972	SEALING COMPOUND -EACH	EA	3	0	REV 7225	8030006149206
3604	70829	SODIUM CARBONATE, AN --	EA	1	0	REV 6231	
372	03530	LEAK DETECTION FLUI -4 OZ PER BOTTLE, 121 BOTTLES PER BOX	OZ	3	0	REV 7243	6850009354068
378-5621	71984	SEALING COMPOUND --	OZ				
3800102-2	70210	GTCP36-55H	EA	1	0	APU FOR AH-64	
3870	94960	TAPE, REFLECTIVE -1 IN WIDE X 50 YD LONG ROLL	YD	3	0	REV 7280	9390001655988
3913-G1	53592	LUBRICANT -6OZ TUBE	OZ	3	R	REV 7232	9150005068497
4-32163-601X	A2608	SEALING COMPOUND -	CC	1	5	REV 6231	8030001806222
4L210	81755	GREASE, MOLYBDENUM D-	LB	1	6	REV 6231	9150007542595
4008-4	61102	CLEANING COMPOUND DR					
40249-1	80254	DESICCANT, ACTIVA --	EA	1	0	REV 6231	6850002646572
4049-0015	19397	STRAP, TIEDOWN, ELECT --	EA	1	0	REV 6230	5975009032284
4104	52152	PLASTIC STRIP, PRESS -18 YD LONG X 5 IN WIDE X .25 THICK --	EA	3	4	18 YD LONG X 0 500 IN WIDE X 0 250 THICK	9330009845834
410608-1	96214	SILICONE COMPOUND --	OZ	1	7	REV 6230	6850008807616
4116	52152	TAPE, PRESSURE SENSI -4116, 3/4 IN WIDE AND 2592 IN LONG	IN	3	7	REV 7239	7510009489543
415804-8	96214	SEALING COMPOUND --	EA				
415936-2	96214	ADHESIVE QT					
416993-1	96214	LUBRICANT, SOLID FIL --	OZ	1	H	REV 6230	9150007540064
417564-1	96214	LUBRICANT, SOLID FIL --	OZ	1	H	REV 6230	9150007540064
4275140-1	05869	SEALING COMPOUND --	CC	1	5	REV 6230	8030000812338

Downloaded from http://www.everyspec.com

CONSUMABLE ITEMS PART 1

P/N	FSCM	NOMENCLATURE	UM	EC	SL	ADDITIONAL INFO	NSN
429-001-124	07421	DESICCANT, ACTIVA -250 BAGS PER 5 GAL CAN	EA	3	0	REV 7275	6850002646562
4308	52152	TAPE, PRESSURE SENSI -1/8 IN 3 18MM 36 YDS PER U/I CHARCOAL GRAY	YD	1	7	REV 7243	7510001487275
435-0002-010	13499	STRAP, TIEDOWN, ELECT -	EA	1	0	REV 6230	5975009032284
435-1169-010	13499	STRAP, TIEDOWN, ELECT -	EA	1	0	REV 6230	5975009032284
437167	36378	SEALING COMPOUND	BT		5		8030001806222
44D111	25140	PETROLATUM, TECHN LB	1	1	6	REV 6230	9150002500926
4416 1IN36YDWHITE	52152	TAPE, PRESSURE SENSI -COLOR WHITE, 1 IN WD ROLL	YD	3	0	REV 7273	7510010712828
443	79899	LUBRICANT, INNER TUB -	LB	0		2640002646642	
45-0202-1	72914	ACCESS-BULK EA	1	0		SEARCH LANDING LT	
4516	52152	TAPE, PRESSURE SENSI - 062 WIDE AND 1296 IN LONG PER ROLL, BLACK	YD	1	0		7510000797604
4529670544	03890	TAPE, INSULATION, ELE -BLACK COLOR BASIC, GREEN COLOR SYMBOL	FT	1	5	REV 6231, 6302	5970009559976
4529670544	03890	TAPE, INSULATION, ELE -	FT	1	5	REV 6231	5970009559976
471 CLEAR 1 IN	26066	TAPE, PRESSURE SENSI -1 IN WD X 1296 IN LONG ROLL CLEAR COLOR	YD	3	0	REV 7280	7510005152856
473	26066	TAPE, PRESSURE SENSI -36 Y) LONG X 1 IN WIDE ROLL	YD	3	0	36 YD LONG X 1 IN WIDE RO CONSUMABLE FOR TM 55-1520-210-23-1	7510005152856
498	71468	CAP, PROTECTIVE DUST -	EA				
499-066-057	07421	SILICONE COMPOUND OZ	1	7		REV 6230	6850008807616
5 BLACK	99017	CAP-PLUG, PROTECTIVE -	EA	1	0	REV 6231, 6302	5340010854234
5-16SC	95760	CAP, PROTECTIVE, DUST -EACH	EA	3	0	REV 7223	5340007774620
5008	08711	GASKET MATERIAL -	EA	1	0	REV 7233	5330012164267
5020-8 INCHES	52942	DISCHARGER, ELECTROS -8 INCHES LONG	EA	3	0	REV 7219	5920011544719
5071C	73842	ADHESIVE -1 QT CAN	QT	3	4	REV 7271	8040003905606

Downloaded from http://www.everyspec.com

CONSUMABLE ITEMS PART 1

P/N	FSCM	NOMENCLATURE	UM	EC	SL	ADDITIONAL INFO	NSN
510	54527	LUBRICATING OIL --	QT				
51008	73165	ANTISEIZE COMPOUND --	LB	1	6	REV 6230	8030005975367
511131-4	80020	SEALING COMPOUND --	CC	1	5	REV 6230	8030000812338
5200-5187-5194	89616	CLOTH, LAMINATED -NYLON, 30 OZ PER SQ YD, 40 IN WIDE, LENGTH 1 YD	YD	3	0	REV 7273	9320005998440
5253	89373	RUBBER SHEET, SOLID - 031 THK, 481N WIDE, SELF SEALING	YD	3	7	REV 7275	9320009498363
5423	34357	TAPE, PRESSURE SENSI - 0120 THK, 18 YD LT, BOX OF 18 RL	YD	3	0	REV 7273	7510011576920
5490	26066	TAPE, PRESSURE SENSI -1296 IN LONG AND 4 IN WIDE ROLL	YD	3	4	REV 7240	7510009230591
55-1043-1	83323	MOLYBDENUM DISULFID --	LB	1	7	6810002646715	
56931	05972	SEALING COMPOUND -BROWN, 10 BOTTLES	CC	3	0	REV 7273	8030003390310
PER CASE 57761	73030	WIRE, NONELECTRICAL --	LB	1	0	REV 6301	· 9505002212650
58A5A49-4	10001	SEALING COMPOUND --	CC	1	5	REV 6231	8030000812328
5812	88301	TAPE, DUCT --	YD				
588-017-9001	70210	PRIMER, ADHESIVE --	PT	1	2	REV 6231	8040008454304
588125	75271	CLOTH, CHEESECLOTH -5 YD PACKAGE	YD	3	0	5 YD PG CONSUMABLE FOR	8305011250725
TM 55-1520-238-23 59	29700	LUBRICATING OIL --	QT				
592-31	05972	SEALING COMPOUND -50 MILLILITERS TUBE	MI	3	5	REV 7225	8030010540740
6G236-6	80063	CLEANING COMPOUND, S -	-GL	3	6	REV 6232, 6357, 7253	6850005979765
604-1	07099	TAPE, INSULATION ELE --	FT				
6044T06G01	99207	T700-GE-701 --	EA	1	0		
609-31	05972	SEALING COMPOUND --	CC	1	5	REV 6231	8030001806222
609-31	05972	SEALING COMPOUND --	CC	1	5	REV 6231	8030001806222

Downloaded from http://www.everyspec.com

CONSUMABLE ITEMS PART 1

P/N	FSCM	NOMENCLATURE		UM	EC	SL	ADDITIONAL INFO	NSN
609-31	05972	SEALING COMPOUND	--	CC	1	5	REV 6231	8030001806222
609-31	05972	SEALING COMPOUND	--	CC	1	5	REV 6231	8030001806222
609-31	05972	SEALING COMPOUND	--	CC	1	5	REV 6231	8030001806222
609-31	05972	SEALING COMPOUND	--	CC	1	5	REV 6302	8030001806222
6168-8792	53718	SHIPPING AND STORAG	--	EA				
6170-18-7	53390	DISTILLEDWATER, TEC	-20ZBOTTLE	OZ	3	0	REV 7157	6810010701784
6170-18-7	53390	DISTILLED WATER, TEC	-	OZ		0		810010701784
62-1926-2604-2	D2607	SEALING COMPOUND	--	OZ	1	2	REV 6230	8030007794700
6263A	94580	ADHESIVE	-AMBER, LIGHT	QT	3	0	8040010046194	
630AA	73219	GREASE, GENERAL PURP	--	LB	3	6	5 LB CAN	9150006631770
635	05972	SEALING COMPOUND	--	CC				
64031	05972	SEALING COMPOUND	-50 CC BOTTLE	CC	3	5	REV 7224	8030001116404
642AS0819	30003	SEALING COMPOUND	-	OZ	1	2	REV 6230	8030007794700
6423	92895	LUBRICATING OIL	-	QT				
6510568	S4956	STRAP, TIEDOWN, ELECT	-	EA	1	0	REV 6230	5975009032284
657	61102	CLEANING COMPOUND, S	-55 GAL DRUM	GL	3	0	REV 7275	6850008101762
6740053-12	24617	CAP, PROTECTIVE, DUST	-	EA	1	0	REV 6232	5340002138881
6740053-12	73342	CAP, PROTECTIVE, DUST	-	EA	1	0	REV 6232	5340002138881
683-3-3	98502	INSULATING COMPOUND	-	PT	1	H	REV 6231	5970001810190
6871617-2	73342	BAG, PLASTIC	-EACH, SIZE 24 IN X 36 IN, TYPE 2 AND STYLE 1	EA	3	0	REV 7223	8105000540939
6871617-2	73342	BAG, PLASTIC		MX	1	0	REV 6231	8105000540939
715K	86460	CLEANING COMPOUND	-	GL				
73X	12744	INK, STAMP PAD	-16 OZ BOTTLE, BLACK	PT	1	0		
730RTV	71984	ADHESIVE	-7 OZ TUBE	OZ	3	4	REV 6226, 7253	8040002512312

Downloaded from http://www.everyspec.com

CONSUMABLE ITEMS PART 1

P/N	FSCM	NOMENCLATURE		UM	EC	SL	ADDITIONAL INFO	NSN
7400-1810	79318	SILICONE COMPOUND	-	OZ	1	7	REV 6230	6850008807616
7447	27293	PAD, SCOURING	-20 PADS TO A BOX	EA	1	0	REV 7232	
747-56	05972	PRIMER, SEALING COM	-6 OZ CAN AEROSOL	EA	1	5	REV 7224	8030001818372
747-56	05972	PRIMER, SEALING COM	-	EA	1	5	REV 6232	8030001818372
74756	05972	PRIMER, SEALING COM		EA	1	5	REV 6232	8030001818372
7527	37940	SODIUM CARBONATE, AN	-	EA				
7534256P2	99971	ADHESIVE	--	SH				
764-55	05972	PRIMER, SEALING COMP	-N GRADE AND R FORM, 4 OZ BOTTLE	OZ	3	6	REV 6219, 7243	8030009002373
764-56	05972	SEALING COMPOUND	--	OZ				
76456	05972	SEALING COMPOUND	--	OZ				
7956584-06	90536	SEALING COMPOUND	--	CC				
7963 NP	21361	CLEANING COMPOUND	--	DR				
80C29	73842	ADHESIVE	- 500 PINT KIT	PT	3	2	REV 7273	8040005183455
801362	19203	SILICONE COMPOUND		OZ	1	7	REV 6230	6850008807616
8089ABX	99384	ADHESIVE	-1 QT KIT	QT	3	4	REV 7233	8040008284936
8089ABX	99384	ADHESIVE	-1 QUART KIT	QT	3	4	REV 7273	8040008284936
809847	19203	XYLENE, TECHNICA	-	GL	1	7	REV 6231	6810005844070
809850	19203	TOLUENE, TECHNICA	-	GL	3	7	REV 6232	6810002900048
81	26066	PRIMER COATING	-15 OZ CAN	OZ	3	6	REV 7243	8010010400947
8179172	18876	CAP, PROTECTIVE, DUST	-	EA	1	0	REV 6231	5340005760780
8198810	19200	ROPE, FIBROUS	-	FT	1	0	REV 6230	4020005239641
82C121 PT	73842	ADHESIVE	-1 PT CAN	PT	3	0	REV 7240	8040011292558
82C18	73842	ADHESIVE 1 PT KIT	-POLYURETHANE, BLK,	PT	3	0	REV 7272	8040011292559

Downloaded from http://www.everyspec.com

CONSUMABLE ITEMS PART 1

P/N	FSCM	NOMENCLATURE	UM	EC	SL	ADDITIONAL INFO	NSN
8202	32204	CLEANING COMPOUND, S -	GL	3	0	REV 6232	7930002618954
828	86961	RESIN COATING, THERM -1 PT CN	PT	3	4	REV 7271	8030000861506
828305	19203	TAPE, PRESSURE SENSI -	YD	1	4	REV 6230	7510002830612
835254	19207	INK, MARKING STENCIL -BLACK 37038,16 OZ AEROSOL CAN	OZ	3	4	16 OZ AEROSOL CN CONSUM-ABLE FOR TM 55-1520-210-23-1	7510002246733
835254	19207	INK, MARKING STENCIL -TYPE 1 YELLOW, 16 OZ CAN	OZ	3	4	16 OZ CN CONSUMABLE FOR TM 55-1520-210-23-1	7510002246733
83842	19203	PRIMER, ADHESIVE PT					
838595	19203	LEAK DETECTION FLUI -REV 7237	OZ	3	0	6850009354068	
838595	19203	LEAK DETECTION FLUI	OZ	3	0	REV 6232	6850009354068
838842	19203	PRIMER, ADHESIVE PT					
840492	19203	CLOTH, CHEESECLOTH YD	1	0		REV 6230	8305002222423
8490010	18876	GREASE, PLUG VALVE -SILICONE, 8 OZ, TUBE	EA	3	7	REV 7275	9150006169212
86	27293	PAD, SCOURING EA	3	0		REV 7243	7920009343469
8643130	19200	GREASE, AIRCRAFT LB	1	6		REV 6230	9150002698255
8643130	19200	GREASE, AIRCRAFT LB	1	6		REV 6230	9150002698255
870378	19203	SEALING COMPOUND CC	1	5		REV 6230	8030000812338
871173	19203	LAYOUT DYE -COLOR, BLUE	PT	1	0	REV 6231	6850006649067
871173	19203	LAYOUT DYE -1 PT CAN	OZ	3	0	REV 7275	6850006649067
8783151	19203	CAP, PROTECTIVE DUST -	EA				
8783476	19203	TAPE, PRESSURE SENSI -2160 INCH ROLL	IN	3	4	REV 7198	7510002666712
8783476	19203	TAPE, PRESSURE SENSI -	IN	1	4	REV 6231	7510002666712
8790670-1	19203	DESICCANT, ACTIVA -	EA	1	0	REV 6231	6850002646572
8790710	19203	TAPE, PRESSURE SENSI -PPP-T-42, TY2, 2160 INCH ROLL	IN	3	7	REV 7161	7510002830612

Downloaded from http://www.everyspec.com

CONSUMABLE ITEMS PART 1

P/N	FSCM	NOMENCLATURE	UM	EC	SL	ADDITIONAL INFO	NSN
8790710	19203	TAPE, PRESSURE SENSI -	YD	1	4	REV 6230	7510002830612
88-31	05972	SEALING COMPOUND -	CC	1	5	REV 6230	8030000812338
883859	19203	COVER, ELECTRICAL CO -EACH	EA	3	0	REV 7223	5935008007685
900010-32C	00624	WIRE, NONELECTRICAL -366 FT ROLL	LB	3	0	366 FOOT ROLL	9505002934208
90001 u-32C	00624	WIRE, NONELECTRICAL -	LB	1	0	9505002934208	
900010-32C	00624	WIRE, NONELECTRICAL -	LB	1	0	9505002934208	
900010-32C	00624	WIRE, NONELECTRICAL -	LB	1	0	9505002934208	
9001512-0011	52571	SEALING COMPOUND -	CC	1	6	REV 6232	
9018440	18876	CAP, PROTECTIVE DUST -	EA				
9150-042	D9455	PETROLATUM, TECH -	LB				
9150-042-1 POUND CAN	D9455	PETROLATUM, TECHN -	LB	1	6	REV 6230	9150002500926
930AA	73219	GREASE, GENERAL PURP -14 OUNCE TUBE	OZ	3	0	REV 7161	9150009531694
94-002	71984	SEALING COMPOUND -	OZ				
944294-2	06481	SEALING COMPOUND -	BT				
945010	19203	CUSHIONING MATER -24 IN WD 6 FT LG 2 IN TK 12 PER BOX	FT	3	0	REV 7223	8135006640057
945010	19203	CUSHIONING MATER -	FT	1	0	REV 6231	8135006640057
945010	19203	CUSHIONING MATER -TY IV GRADE A FEALT 6 FT LONG 24 IN WD 21 IN THK, 12 TO PACK	EA	3	0	REV 7275	8135006640057
945011	19203	CORROSION PREVENTIV -	GL	1	5	8030002312345	
9511C2010	87557	SILICONE COMPOUND OZ	1	7		REV 6230	6850008807616
97121-412R	K1100	CAP, PROTECTIVE, DUST -	EA	1	0	REV 6232	5340002138881
97121-412R	02660	CAP, PROTECTIVE, DUST -	EA	1	0	REV 6232	5340002138881
97121-418R	02660	CAP, PROTECTIVE DUST -	EA				
98	77247	SEALING COMPOUND -4 OZ CAN	OZ	3	0	REV 7272	8030010248302

Downloaded from http://www.everyspec.com

CONSUMABLE ITEMS PART 2

NOMENCLATURE	P/N	FSCM	UM	EC	SL	ADDITIONAL INFO	NSN
ABRASIVE CLOTH A -ASSORTMENT, 1IY, 1CL, 4 -1/2X5-1/2, 12 SH PER SET (GRIT 30, 40, 60,	P-C-451	81348	EA	3	0	REV 7273	5350002715950
ABRASIVE CLOTH A -SET, ASSORTMENT GRIT 120 12 SH, GRIT 100 12 SH, GRIT 80 12 SH	P-C-451	81348	SH	3	0	REV 7240	5350001619066
ACCELERATOR -HAZY TO CLEAR AMBER, 8 OZ CAN	ACCELERATOR NO 4	30676	OZ	3	0	REV 7273	8040011812355
ACCELERATOR -1 PINT CAN	1465C	73842	PT	3	0	REV 7273	
ACCESS -THIS MODEL FOR ALL	ACCESS	81996	EA	1	0		
GEN ACCESSORIES							
ACCESS-BULK	2172-2	26136	EA	1	0	INDICATOR AIRSPEED AH-64	
ACCESS-BULK AH-64	126020	10138	EA	1	0	INDICATOR, ATTITUDE FOR	
ACCESS-BULK AH-64	100-476845-001	90073	EA	1	0	INDICATOR, FUEL QTY FOR	
ACCESS-BULK FOR AH-64	100-476847-001	90073	EA	1	0	INDICATOR, OIL PRESSURE	
ACCESS-BULK	100-476844-001	90073	EA	1	0	INDICATOR, GAS GEN (RPM) FOR AH-64	
ACCESS-BULK	100-476848-001	90073	EA	1	0	INDICATOR, ENG TURBINE/ ROTOR FOR AH-64	
ACCESS-BULK	100-476843-001	90073	EA	1	0	INDICATOR, ENG TORQUE FOR AH-64	
ACCESS-BULK	100-476842-001	90073	EA	1	0	INDICATOR, TURBINE GAS TEMP FOR AH-64	
ACCESS-BULK	2170-1	26136	EA	1	0	IND VERT VEL PILOT AH-64	
ACCESS-BULK	100-476833-002	90073	EA	1	0	DIGITAL DISPLAY PANEL FOR AH-64	
ACCESS-BULK	100-476849-001	90073	EA	1	0	SIGNAL DATA CONVERTER FOR AH-64	
ACCESS-BULK	28B391-2-B	83298	EA	1	0	GENERATOR FOR AH-64	
ACCESS-BULK	45-0202-1	72914	EA	1	0	SEARCH LANDING LT	

Downloaded from http://www.everyspec.com

CONSUMABLE ITEMS PART 2

NOMENCLATURE	P/N	FSCM	UM	EC	SL		ADDITIONAL INFO	NSN
ACETIC ACID GLACIAL ACID 1 POUND BOTTLE	-99 5 MIN VOL ACETIC	MMM-A-121	81348	LB	3	0	REV 7273	
ACETIC ACID, GLACIAL	-5 LB BOTTLE	0-A-76	81348	LB	3	0	REV 7233	6810002751215
ACETIC ACID, GLACIAL ACID 1 POUND BOTTLE	-99 5 MIN VOL ACETIC	O-A-76	81348	LB	3	0	REV 7273	6810002751215
ACETONE, TECHNICAL	-	O-A-51	81348	PT	1	7	16 OUNCE CAN	6810002232739
ACETONE, TECHNICAL	-LIQUID 5 GAL CAN	O-A-51	81348	GL	3	7	REV 8036	6810001844796
ACETONE, TECHNICAL	-1 GALLON CAN	0-A-51	81348	GL	3	0	REV 7161	6810010030262
ACETONE, TECHNICAL	-5 GALLON CAN	0-A-51	81348	GL	3	7	REV 7238	6810001844796
ACETONE, TECHNICAL	-5 GL CAN O-A-51		81348	GL	3	7	REV 7261	6810001844796
ACETYLENE, TECHNICAL CYL	140 CUBIC FOOT GAS	BB-A-106	81348	CF	3	0		6830002646755
ADHESIVE	--	BMS5-7	81205	QT				
ADHESIVE	--	EC1 357	76381	QT				
ADHESIVE	--	GA100AJ1	26512	QT	1	4	REV 6302	8040001658614
ADHESIVE	--	GA100AU1	26512	QT	1	4	REV 6302	8040001658614
ADHESIVE	--	MMM-A-121	81348	QT				
ADHESIVE	--	PROSEAL596	83527	QT		4		8040001658614
ADHESIVE	--	299-947-107TY1CL1	97499	QT	1	4	REV 6203	8040001658614
ADHESIVE	--	415936-2	96214	QT				
ADHESIVE	--	AF-126-2	04633	SH	1	F	REV 6230	8040001161437
ADHESIVE	--	EA9601	33564	SH				
ADHESIVE	--	MMM-A-132 TYCL2	80244	SH				
ADHESIVE	--	7534256P2	99971	SH				
ADHESIVE	--	MIL-A-8623	81349	EA				
ADHESIVE	--	MMM-A-134	81348	EA				

Downloaded from http://www.everyspec.com

CONSUMABLE ITEMS PART 2

NOMENCLATURE	P/N	FSCM	UM	EC	SL		ADDITIONAL INFO	NSN
ADHESIVE	--	MMM-A-134 TY1	80244	EA				
ADHESIVE	--	MIL-A-8623	81349	KT				
ADHESIVE	--	MMM-A-134 TY1	80244	KT				
ADHESIVE	--	MMM-A-134 TY2	80244	KT				
ADHESIVE	--	EPIKOTE828	K2379	OT	1	4	REV 6231	8040008226430
ADHESIVE	--	EPON828-1QTCN	86961	QT	1	4	REV 6231	8040008226430
ADHESIVE	--	SM2071-05-45	35351	QT				
ADHESIVE	--	MMM-A-1617	76381	PT	3	4		8040002629011
ADHESIVE	--	DAPCOTAC 3200	58093	LB	3	0		
ADHESIVE	--	PR-1710	83574	PT	3	0		8040001429721
ADHESIVE	-500 PINT KIT	80C29	73842	PT	3	2	REV 7273	8040005183455
ADHESIVE	-ACRYLIC, OFF WHITE, 3 OZ KIT	VERSILOK 204/ACCELERATOR	430676	OZ	3	0	REV 7272	8040011609551
ADHESIVE	-ACRYLIC, 3 OZ TUBE	VERSILOK 506/ACCELERATOR	430676	OZ	3	0	REV 7272	8040011703599
ADHESIVE	-ADHESIVE PLASTIC EPOXY RESIN COLOR ALUMINUM, ONE QT CAN	1751 B/A	04963	QT	3	2	REV 7238	8040009591854
ADHESIVE	-ADHESIVE PLASTIC EPOXY RESIN COLOR ALUMINUM, 1 PT CAN KIT	1751 B/A	04963	PT	3	2	REV 7238	8040001236954
ADHESIVE	-ADHESIVE PLASTIC EPOXY, 2 OZ KIT	EC-1751 B/A	04963	OZ	3	2	REV 7238	8040001817548
ADHESIVE	-ADHESIVE RUBBER LIQUID FORM, 1 PINT CAN	MMM-A-121 81348		PT	3	4	REV 7238	8040002738717
ADHESIVE	-ADHESIVE RUBBER SYNTHETIC COLOR BROWN, 1 QUART CAN	EC847	04963	OT	3	4	REV 7238	8040003907959
ADHESIVE	-AMBER, LIGHT	6263A	94580	QT	3	0		8040010046194
ADHESIVE	-BONDS RUBBER TO STEEL, 1 PINT CAN	EC-1357	76381	PT	1	4	REV 7232	8040002738717

Downloaded from http://www.everyspec.com

CONSUMABLE ITEMS PART 2

NOMENCLATURE	P/N	FSCM	UM	EC	SL		ADDITIONAL INFO	NSN
ADHESIVE USE WITH VELCRO HOOK AND LOOP TAPE	-BUNA-N, 1QT, FOR	V-45D	83014	QT	3	0	REV 7272	8040012038976
ADHESIVE 1 PT CAN KIT	-GLASS 3 AND FORM B,	MMM-A-139	81348	PT	3	4	REV 7261	8040002629062
ADHESIVE 1 QT CAN	-CLASS 3 AND FORM B,	MMM-A-139	81348	OT	3	4	REV 7261	8040002918381
ADHESIVE BOTTLE W/SPREADER	-COLORLESS, 1 PINT	MIL-A-46050	81349	PT	3	2	REV 7273	8040010909320
ADHESIVE MMM-A-1617 TYPE 3, 1 PT CAN	-CONFORMS TO	EC2126	76381	PT	3	4	REV 7233	8040002629011
ADHESIVE	-DARK BLUE, 1 GL KIT	299-947-125 TY2 CL 2	97499	EA	3	4	REV 7274	8040010435423
ADHESIVE CAN LIQUID	-EC776SR TY 2, 1 GL	EC776SR	D2607	GL	3	6	REV 7252	8040002660818
ADHESIVE	-EPOXY PLASTIC KIT,	EA 9309 3NA	33564	OZ	7	H	REV 7365	8040011633481
ADHESIVE SYNTHETIC RESIN 1 GAL CAN	-GEN PURPOSE	EC776	04963	GL	1	4	REV 7232	8040009954153
ADHESIVE 0, 5 GAL CAN	-GRADE A AND CLASS	MIL-R-7575 TYPE1	81349	GL	3	2	REV 7271	8040002910162
ADHESIVE CARTRIDGE	-GRAY, 120Z	MIL-L-46146	81349	OZ	3	2	REV 7273	8040001449774
ADHESIVE 1 QT ACTIVATUR, LIQUID, FOR GEN PURPOSE USE	-KIT, 1GAL BASE PLUS	BONDMASTERM24	01666	OZ	3	5	REV 7275	8040001817784
ADHESIVE TUBE KIT	-LIGHT GRAY, 6 OZ	MMM-A-1754	81348	EA	3	4	REV 7273	8040009447292
ADHESIVE	-LIQUID 1 PT CAN	PROSEAL 584	83527	OZ	3	4	REV 7275	8040009646757
ADHESIVE	-LIQUID 8 OZ BOTTLE	MIL--23092	81349	OZ	3	K		804000511318
ADHESIVE BONDING RUBBER TO STEEL, 1 OT CAN	-LIQUID, USAGE	MMM-A-121	81348	OZ	3	4	REV 7275	8040001658614
ADHESIVE GRAY, TY1 CL3, 2 5 OZ KIT	-LIQUID, COLOR	25009-1	92108	OZ	3	2	REV 7275	8040001520017

Downloaded from http://www.everyspec.com

CONSUMABLE ITEMS PART 2

NOMENCLATURE	P/N	FSCM	UM	EC	SL		ADDITIONAL INFO	NSN
ADHESIVE CLASS 1, 1 OZ PLASTIC BOTTLE	-MIL-A46050 TYPE1	MIL-A-46050	81349	OZ	3	2	REV 7233	8040001429193
ADHESIVE CLEAR, 1 PT CAN	-MIL-A-46106 TY1	MIL-A-46106	81349	PT	3	0	REV 7161	8040010313170
ADHESIVE OZ CARTRIDGE	-MIL-A46106 TY1, 12	RTV102	01139	OZ	3	4	REV 7233	8040002254548
ADHESIVE BLK, U/I 12 OZ CARTRIDGE	-MIL-A-46146, TY1,	RTV133	01139	OZ	3	2	REV 7272	8040011680077
ADHESIVE 2, 1 PT CAN	-MM-M-A-1617TYPE	MMM-A-1617	81348	PT	3	2	REV 7233	8040006644318
ADHESIVE CL3, 80Z CARTRIDGE	-MMM-A-132, TY1,	MMM-A-132	81348	OZ	3	2	REV 8036	8040001520023
ADHESIVE LM, 121N, 1000 SHEETS PER BOX	-MMM-A-132, TY1, CL2, FI	MMM-A-132	81348	SH	3	F	REV 7157	8040001161437
ADHESIVE KIT	-MMM-A-134 TY1, 1 PT	MMM-A-134	81348	PT	3	4	REV 7198	8040009006296
ADHESIVE COLOR GRAY, 6 OZ PLASTIC CARTRIDGE	-MMM-A-132 TY CL 3	MMM-A-132	81348	OZ	3	2	REV 7253	8040001520028
ADHESIVE COLOR GRAY, 2 5 OZ PLASTIC CARTRIDGE	-MMM-A-132 TY 1 CL 3	MMM-A-132	81348	OZ	3	2	REV 7240	8040001520017
ADHESIVE COLOR GRAY, 8 OZ PLASTIC CARTRIDGE	-MMM-A-132 TY 1 CL 3	MMM-A-132	81348	OZ	3	2	REV 7240	8040001520023
ADHESIVE RESIN, PASTE FORM KIT W/CATALYST, 2 OZ	-PLASTIC EPOXY	EC2216 B/A	04963	OZ	3	2	REV 8004	8040001450019
ADHESIVE	-PLASTIC EPOXY PASTE	EA9309.2	33564	QT	3	4	REV 7238	8040011175385
ADHESIVE, 1 QUART CAN								
ADHESIVE 1 PT KIT	-POLYURETHANE, BLK,	82C1 8	73842	PT	3	0	REV 7272	8040011292559
ADHESIVE	-REV 7239 08001	04963	OZ	3	0		8040001092481	
ADHESIVE SYNTHETIC, 1 PT CAN, LIQUID FORM	-RUBBER EC765	94962	OZ	3	4		REV 7275	8040006640439

Downloaded from http://www.everyspec.com

CONSUMABLE ITEMS PART 2

NOMENCLATURE	P/N	FSCM	UM	EC	SL		ADDITIONAL INFO	NSN
ADHESIVE RTV, BLACK, 7 OZ TUBE	-SILASTIC 732	HMS16-1118TY1CL1	02731	OZ	3	D		8040008510211
ADHESIVE RUBBER, TYPE 2, 1-QT-CNS	-SYNTHETIC	EC711	76381	QT	1	2	REV 7232	8040002904301
ADHESIVE	-TY I 5 OZ TUBE	MIL-A-46106	81349	OZ	3	4	REV 7280	8040008779872
ADHESIVE AND 2 OZ BOTTLE CURING AGENT	-TYPE II, 1 PT CAN	MMM-A-134	80244	PT	3	4	1 PT CN AND 20Z BT CURING AGENT CONSUMABLE FOR	8040006911322
ADHESIVE 1 PINT CAN	-TYPE 1, CLASS 1,	MMM-A-132	81348	PT	3	2	REV 7273	8040001520023
ADHESIVE TUBE	-TYPE 1, WHITE, 3 OZ	MIL-A-46106	81349	OZ	3	4	REV 7273	8040008779872
ADHESIVE	-TYPE 1, 1 PINT KIT,	MIL-A-8576	81349	OZ	3	2	REV 7261	8040002660815
ADHESIVE	-TYPE 1,1 QT CAN	MMM-A-134	81348	QT	3	4	1 QT CN CONSUMABLE FOR TM 55-1520-210-23-1	8040002708137
ADHESIVE CARTRIDGE	-TYPE 1, 6 OZ	MMM-A-134	81348	OZ	3	4	REV 7261	8040001520065
ADHESIVE TUBE	-TYPE 1, CLEAR, 3 OZ	MIL-A-46146	81349	OZ	3	2	REV 7273	8040010091562
ADHESIVE	-TYPE 2, 1 EA KIT	MMM-A-134	81348	EA	3	4	REV 7273	8040002004390
ADHESIVE	-TYPE 2, 1 QT CAN	MMM-A-1617	81348	QT	3	2	REV 7271	8040002904301
ADHESIVE GRAY	-TY1, CL3,8 OZ, COLOR	MMM-A-132	81348	EA	3	2	REV 7273	8040001520023
ADHESIVE	-TY1, CL3, 1QT KIT, GRAY	MMM-A-132	81348	EA	3	2	REV 7274	8040011022098
ADHESIVE	-TY2, CL3, 1 OZ, BOTTLE	MIL-A-46050	81349	OZ	3	0	REV 7273	8040011400954
ADHESIVE	-TY2, 1PT KIT	MMM-A-134	81348	EA	3	4	REV 8036	8040006911322
ADHESIVE	-TY2, 1PT, KIT	MIL-A-8576	81349	EA	3	2	REV 8007	8040005261910
ADHESIVE ALUMINUM	-U/I 1 QT KIT, COLOR	1751 B/A	04963	QT	3	2	REV 7272	8040009591854
ADHESIVE SILICONE, PASTE FORM TY1, 3 OZ TUBE	-WHITE MIL-A-46146 TY1	80244	OZ	3	2		REV 8006	8040001182695

Downloaded from http://www.everyspec.com

CONSUMABLE ITEMS PART 2

NOMENCLATURE		P/N	FSCM	UM	EC	SL	ADDITIONAL INFO	NSN
ADHESIVE RUBBER PASTE FORM 120Z CARTRIDGE	-WHITE SILICONE	MIL-A-46146	81349	OZ	3	2	REV 7275	8040009381535
ADHESIVE FORM, 1QT CAN	-WHITE, PASTE	SAUEREISEN19	80703	OZ	3	2	REV 8039	
ADHESIVE	-WHITE, 12 OZ CAN	MIL-A-46146	81349	OZ	3	2	REV 7274	8040009381535
ADHESIVE	-1 GALLON CAN	PLIOGRIP12-3	73842	GL	3	4	REV 7273	8040000187581
ADHESIVE	-1 GALLON KIT	EPOCAST50A	99384	GL	3	4	REV 7273	8040001489849
ADHESIVE	-1 GL CAN 34	04963	GL	3	0		REV 7239	8040011045386
ADHESIVE	-1 GL CAN MMM-A-185	81348	GL	3	5		REV 7261	8040002629040
ADHESIVE	-1 GL KIT EC-1751BA	04963	GL	1	4		REV 7232	8040001375622
ADHESIVE	-1 PINT CAN	MMM-A-122	81348	PT	3	4	REV 8036	8040006640439
ADHESIVE	-1 PINT KIT EC-3532 B/A	04963	PT	1	0		REV 7365	8040011525334
ADHESIVE	-1 POUND KIT	EA901NA/B1	33564	LB	3	4	REV 7273	8040008313403
ADHESIVE	-1 PT CAN MMM-A-122	81348	PT	3	4		REV 7233	8040006640439
ADHESIVE	-1 PT CAN 82C12 1 PT	73842	PT	3	0		REV 7240	8040011292558
ADHESIVE	-1 PT CAN MMM-A-122	81348	PT	3	4		1 PT CN CONSUMABLE FOR TM 55-1520-210-23-1	8040006640439
ADHESIVE	-1 PT CAN SM85391	04614	PT	3	4		1 PT CN CONSUMABLE FOR TM 55-1520-210-23-1	8040009646757
ADHESIVE	-1 QTCAN EC1357	04963	OT	3	4		REV 6219 REV 7237	8040001658614
ADHESIVE	-1 QTCAN 5071C	73842	QT	3	4		REV 7271	8040003905606
ADHESIVE	-1 OT CAN SAUEREISEN19	80703	QT	3	2		1 OT CON CONSUMABLE FOR TM 55-1520-21 23-1	
ADHESIVE	-1 QT CAN MIL-A-9117	81349	OT	3	2		1 QT CN CONSUMABLE FOR TM 55-1520--213-1	8040002629060
ADHESIVE	-1 QT KIT EA9314 PARTS A/B	04347	QT	3	0		REV 6219, REV 7198	8040011891284
ADHESIVE	-1 OT KIT EC2216 B/A	04963	QT	1	2		REV 7232	8040001450530

Downloaded from http://www.everyspec.com

CONSUMABLE ITEMS PART 2

NOMENCLATURE		P/N	FSCM	UM	EC	SL	ADDITIONAL INFO	NSN
ADHESIVE	-1 QT KIT	EC3549BA	04963	QT	3	0	REV 7232	8040010164726
ADHESIVE	-1 QT KIT	8089ABX	99384	QT	3	4	REV 7233	8040008284936
ADHESIVE	-1 QT KIT	BOSTIK4006AAND406B	70707	QT	3	4	REV 7261	8040003907960
ADHESIVE	-1 QT KIT	EA9309AtB	33564	EA	3	4	REV 7274	8040010128749
ADHESIVE	-1 QT KIT	SR529/SRC18	01139	EA	3	2	REV 7274	
ADHESIVE	-1 QUART CAN	EPON828	86961	QT	3	4	REV 7212	8040008226430
ADHESIVE	-1 QUART KIT	EA934	33564	QT	3	0	REV 7365	8040000168662
ADHESIVE	-1 QUART KIT	DAPCOTAC3300	58093	QT	3	2	REV 7273	
ADHESIVE	-1 QUART KIT	8089ABX	99384	QT	3	4	REV 7273	8040008284936
ADHESIVE	-100 GRAM KIT, TUBE	MPD11881TY4	18876	GM	3	4	REV 6357, 7257	8040000618303
ADHESIVE	-11 OZ TUBE KIT	MMM-A-1754	81348	OZ	3	4	REV 7232	8040007386429
ADHESIVE	-12 OUNCE CARTRIDGE	RTV103	01139	OZ	3	4	REV 6225 REV 7218	8040008658991
ADHESIVE	-12 OZ CARTRIDGE	MIL-A-46146	81349	OZ	3	2	REV 7243	8040001449774
ADHESIVE	-12 OZ CARTRIDGE	MIL-A-46146	81349	OZ	3	2	12 OZ CARTRIDGE CONSUMABLE FOR TM 55-1520-210-23-1	8040001182695
ADHESIVE	-123 GRAM TUBE KIT	EPK 1C	04347	GM	3	4	REV 7233	8040007770631
ADHESIVE	-16 OZ CAN A4 METAL SET	90414	OZ	3	0		REV 7261	8040010887186
ADHESIVE	-2 LB KIT ECCOBOND45	04552	LB	3	2		REV 7233	8040001487183
ADHESIVE	-2 LB KIT EA 9313	33564	LB	3	0		REV 7253	8040011074000
ADHESIVE CATALYST	-2 QT BASE AND 1 QT	EPON960F	33564	QT	1	4	REV 7253	8040010800361
ADHESIVE CLASS 5, 1 PT CAN	-299-947-107 TYPE 2	299-947-107	97499	PT	3	4	REV 7239	8040006640439
ADHESIVE	-3 OUNCE TUBE	RTV108	01139	OZ	3	4	REV 7209	8040008430802
ADHESIVE	-3OZ TUBE RTV106	01139	OZ	3	4		REV 7243	8040009023871
ADHESIVE	-3 OZ TUBE 3145 RTV GRAY	71984	OZ	3	2		REV 7257	8040001450020

Downloaded from http://www.everyspec.com

CONSUMABLE ITEMS PART 2

NOMENCLATURE		P/N	FSCM	UM	EC	SL	ADDITIONAL INFO	NSN
ADHESIVE	-3 OZ TUBE, CLEAR	MIL-A-46106 TY 1 CLEAR 3 OZ TUBE	80244	OZ	3	4	REV 7273	8040008430802
ADHESIVE	-300 GRAM KIT	S-1009	06090	GM	3	4	REV 7253	8040001817201
ADHESIVE	-4 OUNCE KIT	A-1177B	03481	EA	3	0	REV 7162	8040010363771
ADHESIVE	-400 GRAM KIT	PROSEAL 501	83527	GM	3	2	REV 7273	8040001267798
ADHESIVE	-5 GALLON CAN	SR529-1 GAL	01139	GL	3	4	REV 7273	8040001490136
ADHESIVE	-5 OZ TUBE MIL-A-46106	81349	OZ	3	4		5 OZ TU CONSUMABLE FOR TM 55-1520-238-23	8040008339563
ADHESIVE	-6 OUNCE TUBE	MIL-A-46106	81349	OZ	3	4	REV 7218	8040009419984
ADHESIVE	-6 OZ KIT METAL SET A4	90414	OZ	3	4		REV 7233	8040009447292
ADHESIVE	-7 OZ TUBE 730RTV	71984	OZ	3	4		REV 6226, 7253	8040002512312
ADHESIVE, TAPE	- FGA 32600	28153	IN	1	0			
AH-1S AH-1 S CONSUMABLE	-MODEL RECORD FOR	AH-1S	81996	EA	A	0		
AH-64A	AH-64A	02731	EA	1	0			
ALCOHOL, DENATURED 3A AND GRADE 3, 55 GL DRUM	-DENATURED FORMULA	OE760	81348	GL	3	7	REV 7253	6810002010904
ALCOHOL, DENATURED OUNCE BOTTLE	-E-00760, TY4, 32	O-E-00760	81348	PT	3	0	REV 7212	6810002056786
ALCOHOL,DENATURED PAIL	-OE-760 GRADE 3, 5 GL	OE760	81348	GL	3	7	REV 7240	6810002010907
ALKALINE CLEANER	- TURCO HTC	95510	LB	3	0		681001H758008	
ALKALINE, DESCALER	-125 LB KEG	TURCO 4181	95510	LB	3	0	REV 7161	6850012138797
ALUMINUM OXIDE, ANHY BOTTLE POWDER	-MIL-A-10825 1LB	MIL-A-10825	81349	LB	3	0	REV 7225	6810001618558-
AMMONIUM FLOURIDE	- A665	94480	LB	3	0		REPLACES H2H701CMMM	6810009743621
AMMONIUM HYDROXIDE,	-32 OUNCE BOTTLE	O-A451	81348	QT	1	0	REV 7229	6810005272476
AMMONIUM HYDROXIDE, BOTTLE	-TYPE 1, 16 OZ PT	O-A451	81340	PT	3	0	REV 7257	6810005843793

Downloaded from http://www.everyspec.com

CONSUMABLE ITEMS PART 2

NOMENCLATURE		P/N	FSCM	UM	EC	SL	ADDITIONAL INFO	NSN
AMMONIUM NITRATE POUND BAG	-MIL-A-175 CL1, 50	MIL-A-175	81349	LB	3	0	REV 7161	6810010584785
AMMONIUM NITRATE, AC	-1 LB BOTTLE	MIL-STD-1218	96906	LB	3	0	REV 7237	6810002229679
ANTIFREEZE	-	O-A-548	81348	GL				
ANTIFREEZE A-A-870 1 GAL CAN	-O-A-548 OBS REF USE	A-A-870	58536	GP	3	7	REV 7225	
ANTISEIZE COMPOUND SYSTEMS, 1 POUND CAN	-AIRCRAFT OXYGEN	MIL-T-5542	81349	LB	3	7	REV 7273	8030005305234
ANTISEIZE COMPOUND	-8 OZ TUBE	MIL-T-22361	81349	OZ	3	4	REV 7273	8030002921102
ANTISEIZE COMPOUND	-	FELPROC5	73165	LB				
ANTISEIZE COMPOUND		MIL-A-907-2LB80ZCN	81349	LB				
ANTISEIZE COMPOUND		51008	73165	LB	1	6	REV 6230	8030005975367
ANTISEIZE COMPOUND		MOLYKOTE G	94499	OZ				
ANTISEIZE COMPOUND		005-0467-020	13499	OZ				
ANTISEIZE COMPOUND MOLYBDENUM, 1800 DEG F TEMP RATING, 1 PT CAN	-GRAPHITE AND	EASE OFF 990	87889	EA	3	4	REV 7275	8030007784277
ANTISEIZE COMPOUND DISSULFIDE, 1 LB CN	-MOLYBDENUM	MIL-T-83483	81349	LB	3	6	REV 8035	8030000878630
ANTISEIZE COMPOUND	-2 5 LB CAN	MIL-A-907	81349	LB	3	6	REV 7157	8030005975367
ANTISEIZE COMPOUND	-2 8 OZ TUBE	MOLYKOTE G-N	94499	OZ	3	7	REV 7225	8030008314171
ANTISEIZE COMPOUND	-250 GRAM TUBE	MIL-T-5544	81349	OZ	3	0	REV 7157	8030011381666
ARGON, TECHNICAL CYLINDER	-197 CUBIC FOOT GAS	MIL-A-18455	81349	CF	3	0	REV 7212	6830001690779
ARGON, TECHNICAL	-250 CUBIC FOOT	MIL-A-18455	81349	CF	3	0		6830002904291
ASSEMBLY FLUID GAL CONTAINER, 4 OZ TUBE	-ASSEMBLY FLUID 1	ASSEMBLY FLUID 1	56385	OZ	3	Q	REV 7351	9150001595012
ASSEMBLY FLUID	-4 OUNCE TUBE	RT403C	77988	OZ	3	Q	REV 7218	9150001595012
BAG, PLASTIC	-	PPP-B-26 TY2ST1	80244	MX				

Downloaded from http://www.everyspec.com

CONSUMABLE ITEMS PART 2

NOMENCLATURE		P/N	FSCM	UM	EC	SL	ADDITIONAL INFO	NSN
BAG, PLASTIC		6871617-2	73342	MX	1	0	REV 6231	8105000540939
BAG, PLASTIC 241NX361N, TYPE2 AND STYLE 1	-EACH, SIZE	6871617-2	73342	EA	3	0	REV 7223	8105000540939
BAG, PLASTIC X 12 IN WIDE	-SIZE 6,12 IN HIGH	MIL-B-22020	81349	EA	3	0	12 IN HIGH X 12 IN WIDE CONSUMABLE FOR TM 55-1520-210-23-1	8105000278485
BAG, PLASTIC 2 STYLE 1, 60 PER BOX	-SIZE, 10X241N, TYPE	PPP-B-0026	81348	EA	1	0	REV 7225	8105008224338
BAG, PLASTIC PER BOX	-SIZE, 4X41N, 1000	A-A-1668	58536	MX	3	0	REV 7224	8105008377754
BAG, PLASTIC PER BOX	-SIZE, 6X61N, 1 000	A-A-1668	58536	MX	3	0	REV 7224	8105008377754
BAG, PLASTIC PER BOX	-SIZE, 8X81N, 1000	PPP-B-26	81348	MX	3	0	REV 7224	8105008377755
BAG, PLASTIC 1, GRADE A, FINISH 1, 500 EA BOX	-TYPE 1, CLASS	A-A-1668	58536	EA	3	0	REV 6357, 7257	8105008377757
BAG, PLASTIC GRADE A, FINISH 2, 1000 EA	-TYPE 1, CLASS 1,	A-A-1668	58536	MX	3	0	REV 6357, 7257	8105008377755
BAG, PLASTIC GRADE C, FINISH 1, 500 EA BOX	-TYPE 1, CLASS 1,	A-A-1668	58536	EA	3	0	REV 6357, 7257	8105008377756
BAG, PLASTIC GRC, 1 HD, CLEAR	-TYPE 2, CLASS 1,	A-A-1668	58536	EA	3	0	REV 7273	8105005799285
BAG, PLASTIC PER BOX	-121N X 121N, 500	PPP-B-26	81348	DZ	3	0	REV 7225	8105008377757
BAG, PLASTIC, PER BOX	-SIZE, 9X121N, 1000	A-A-1668	58536	HD	1	0	REV 7224	
BARRIER MATERIAL, GR	-CLASS 1, 200 YD ROLL	MIL-B-81705	81349	YD	3	0	REV 7257	8135000923220
BARRIER MATERIAL, GR 600 FT PER ROLL	-MIL-B-121, TY2, GRA, CL1,	MIL-B-121	81349	EA	3	0	REV 7156	8135002248885
BARRIER MATERIAL, GR AND CLASS 2, 100 YD ROLL	-TYPE 1 AND GRADE A	MIL-B-121	81349	YD	3	0	REV 8007	8135007534661
BARRIER MATERIAL, GR FT RL COLOR RED	-TY1, GRA, CL B 4X300	MIL-B-121	81349	FT	3	0	REV 7225	8135005436574

Downloaded from http://www.everyspec.com

CONSUMABLE ITEMS PART 2

NOMENCLATURE		P/N	FSCM	UM	EC	SL	ADDITIONAL INFO	NSN
BARRIER MATERIAL, WA	-	MIL-B-131	81348	YD	1	0	REV 6231	8135002820565
BARRIER MATERIAL, WA	-	MIL-B-131	81348	YD	1	0	REV 6231	8135002820565
BARRIER MATERIAL, WA	-200 YARD PER ROLL	MIL-B-131	81349	YD	3	0	REV 7219	8135002820565
BATTERY WATER	-5 GALLON BOTTLE	O-B-41	81348	GL	3	0	REV 7218	6810002979540
BEESWAX, TECHNICA	-1 LB CAKE	C-B-191	81348	LB	3	7	REV 7217	9160002531171
BENZENE, TECHNICAL	GRADEA, 1 GL CAN	WB231	81348	GL	3	7	REV 7261	6810002815272
BORIC ACID, ACS	-1 LB BOTTLE	0C265	81348	LB	3	0	REV 7233	6810002646535
BORIC ACID, ACS	-1 LB BOTTLE	OC265	81348	LB	3	0	REV 7233	6810002646535
BORIC ACID, ACS	-1 LB BOTTLE	OC265	81348	LB	3	0	REV 7261	6810002646535
BORIC ACID, ACS	-1 POUND BOTTLE	A74	94480	EA	3	0	REV 7273	6810009735716
BOTTLE, SCREW CAP	-GLASS, 16 OZ CAPACITY	S-8275G	64484	EA	3	0	REV 7274	6640004040660
BOTTLE, SCREW CAP	-GLASS, 32 OZ CAPACITY	S8275G	64484	EA	3	0	REV 7274	6640004040660
BOX, SHIPPING WD X 4IN DEPTH, 15 EA PER BUNDLE	-C9,30 IN LT X 23 IN	PPP-B-636	81348	EA	3	0	REV 7273	8115002223022
BRAZING ALLOY, NICK FORM, LB	-NICKEL 3/16 WIRE	AMS4777	81343	LB	3	0	REV 7225	3439001399214
BRAZING ALLOY, NICK	-REV 7211	AMS4777	81343	EA	3	0	REV 7211	3439002568239
BRAZING ALLOY, SILVE FS/BCP-5	-COMPOSITION NO.	QQS561	81348	TO	3	0	CONSUMABLE FOR TM 55-1500-204-25/1	3439000521899
BRAZING ALLOY, SILVE 1 V BRAZING ALLOY. SILVER	- 063 DIA WIRE GR	QQ-B-654	81348	TO	3	0	REV 7280	3439002624188
BRUSH PLATING SOLUT	-1 GAL BOTTLE	LDC 4803	57868	GL	3	M	REV 7275	6850003069596
BRUSH, ACID SWABBING -		H-B-643 TY2CL1SZ1	80244	EA	3	0	REV 8004	7920005142417
BRUSH, CLEANING, AIRC FIBER AND NYLON	-TYPE 3 AND STYLE 1,	MIL-B-23958	81349	EA	3	0	REV 7253	7920000514384
BRUSH, SANITARY AND DUTY A	-1 TYPE AND 2 CLASS	H-B-00481	81348	EA	3	0	REV 7253	7920007725800

Downloaded from http://www.everyspec.com

CONSUMABLE ITEMS PART 2

NOMENCLATURE	P/N	FSCM	UM	EC	SL		ADDITIONAL INFO	NSN
BRUSH, STENCIL TYPE F, EACH	-FOUNTAIN STYLE	H-B-00621	81348	EA	3	0	REV 6357 REV 7237	7520002489285
BUFFING COMPOUND TO 10 MICRONS, COMES IN A ROLL	-GRIT VARIES FROM 5	LEAROK888	75554	EA	3	0	REV 7273	5350001657145
BULK AIRCRAFT MAINTENANCE MANUAL	-USED FOR GENERAL	BULK	81996	EA	3	0		
CABLE, ELECTRICAL	-FEET	HS4863-1	02731	FT	1	0	REV 7232	6145011866912
CABLE, POWER, ELECTRI	-FEET	HS5313A3001	02731	FT	1	0		6145011866983
CABLE, POWER, ELECTRI	-FEET	HS5313A3002	02731	FT	1	0	REV 7232	6145011866984
CABLE, POWER, ELECTRI	-FEET	HS5313A3003	02731	FT	1	0	REV 7232	6145011866985
CABLE, POWER, ELECTRI	-FEET	HS5313A4001	02731	FT	1	0	REV 7232	6145011866986
CABLE, POWER, ELECTRI	-FEET	HS5313A4002	02731	FT	1	0	REV 7232	6145011866987
CALCIUM FLUORIDE, AN	- 25 POUND BOTTLE	MIL-C-11162	81349	LB	3	0	REV 7273	6810002628574
CALIBRATING FLUI	-TYPE 2, 55 GAL DRUM	MILC7204	81349	GL	3	7	REV 7275	6850002645771
CALIBRATING FLUI	-55 GALLON DRUM	MIL-C-7024	81349	GL	3	7	REV 7218	6850002645771
CALIBRATING FLUID, A	-TYPE 1, 55 GAL DRUM	MIL-C-7024	81349	GL	3	7	REV 7271	6850002698388
CALKING LEAD	-5 LB BOX	A-A-1189	58536	EA	3	0	REV 7349	5330001716545
CAP-PLUG, PROTECT IN SHOULDER	-1 649 IN.ID.,.625	NAS816-158	80205	EA	3	0	REV 7274	5340008150890
CAP-PLUG, PROTECTIVE -	MILC5501/7	81349		EA				
CAP-PLUG, PROTECTIVE	-5 BLACK	99017		EA	1	0	REV 6231, 8302	5340010854234
CAP-PLUG, PROTECTIVE	-EACH	M5501/7-F5	81349	EA	3	0	REV 7223	5340011040373
CAP-PLUG, PROTECTIVE	-EACH	M5501/7-F10	81349	EA	3	0	REV7223	5340010854234
CAP-PLUG, PROTECTIVE	EACH	WW2	99017	EA	3	0	REV 7224	5340007922683
CAP, PROTECTIVE DUST -	EC18	72599		EA				
CAP, PROTECTIVE DUST -	MS90376-18R	96906		EA				

Downloaded from http://www.everyspec.com

CONSUMABLE ITEMS PART 2

NOMENCLATURE	P/N	FSCM	UM	EC	SL	ADDITIONAL INFO	NSN
CAP, PROTECTIVE DUST -	1219270-8	06840	EA				
CAP, PROTECTIVE DUST -	1219270-8	19315	EA				
CAP, PROTECTIVE DUST -	1219270-8	55972	EA				
CAP, PROTECTIVE DUST -	34310513062	D0483	EA				
CAP, PROTECTIVE DUST -	8783151	19203	EA				
CAP, PROTECTIVE DUST -	9018440	18876	EA				
CAP, PROTECTIVE DUST -	97121-418R	02660	EA				
CAP, PROTECTIVE DUST -	NAS814-8	80205	EA				
CAP, PROTECTIVE DUST -	498	71468	EA				
CAP, PROTECTIVE DUST	MIL-5501/3	81349	EA				
CAP, PROTECTIVE, DUST -	FC100	15819	EA	3	0		5340009177850
CAP, PROTECTIVE, DUST -	1945059001	99193	EA	1	0	REV 6231	5340009177850
CAP, PROTECTIVE, DUST -	2622620301	99167	EA	1	0	REV 6231	5340009177850
CAP, PROTECTIVE, DUST -	M5501/3R8	81349	EA	1	0	REV 6231, 6302	5340010304467
CAP, PROTECTIVE, DUST -	M5501F7	81349	EA	1	0	REV 6231	5340011706662
CAP, PROTECTIVE, DUST -	M550119-F7	81349	EA	1	0	REV 6231	5340011706662
CAP, PROTECTIVE, DUST -	M55019-F7	81349	EA	1	0	REV 6231	5340011706662
CAP, PROTECTIVE, DUST -	12Z12139PC43	10001	EA	1	0	REV 6231	5340005760780
CAP, PROTECTIVE, DUST -	178D542P29	07482	EA	1	0	REV 6231	5340005760780
CAP, PROTECTIVE, DUST -	178D542P29	89954	EA	1	0	REV 6231	5340005760780
CAP, PROTECTIVE, DUST -	8179172	18876	EA	1	0	REV 6231	5340005760780
CAP, PROTECTIVE, DUST -	EC12	99017	EA	1	0	REV 6232	5340002138881
CAP, PROTECTIVE, DUST -	MS90376-12R	96906	EA	1	0	REV 6232	5340002138881
CAP, PROTECTIVE, DUST -	NAS813-12	80205	EA	1	0	REV 6232	5340002138881

Downloaded from http://www.everyspec.com

CONSUMABLE ITEMS PART 2

NOMENCLATURE	P/N	FSCM	UM	EC	SL	ADDITIONAL INFO	NSN
CAP, PROTECTIVE, DUST -	10-70500-12	77820	EA	1	0	REV 6232	5340002138881
CAP, PROTECTIVE, DUST -	1101283	79318	EA	1	0	REV 6232	5340002138881
CAP, PROTECTIVE, DUST -	139981	66640	EA	1	0	REV 6232	5340002138881
CAP, PROTECTIVE, DUST -	6740053-12	24617	EA	1	0	REV 6232	5340002138881
CAP, PROTECTIVE, DUST -	6740053-12	73342	EA	1	0	REV 6232	5340002138881
CAP, PROTECTIVE, DUST -	97121-412R	K1100	EA	1	0	REV 6232	5340002138881
CAP, PROTECTIVE, DUST -	97121-412R	02660	EA	1	0	REV 6232	5340002138881
CAP, PROTECTIVE, DUST - EACH	MS90376-18R	96906	EA	3	0	REV 7211	5340001930783
CAP, PROTECTIVE, DUST - EACH	CD8	99017	EA	3	0	REV 7211	5340006804394
CAP, PROTECTIVE, DUST - EACH	5-16SC	95760	EA	3	0	REV 7223	5340007774620
CAP, PROTECTIVE, DUST - EACH	M5501/9-F7	81349	EA	3	0	REV 7223	5340011706662
CAP, PROTECTIVE, DUST - EACH	12Z12139PC43	10001	EA	3	0	REV 7223	5340005760780
CAP, PROTECTIVE, DUST - EACH	M5501/3-R4	81349	EA	3	0	REV 7224	5340011122822
CAP, PROTECTIVE, DUST - EACH	EC12	95760	EA	3	0	REV 7224	5340002138881
CAP, PROTECTIVE, DUST - EACH	FF26	99017	EA	3	0	REV 7224	5340005896020
CARBON DIOXIDE, TECH - CARBON DIOXIDE, TECHNICAL 50 LB BLOCK	BB-C-104	81348	LB	3	0	REV 7162	6830002470619
CARBON DIOXIDE, TECH - 99.95 MIN WTCARBON DIOXIDE, SOLID BLOCK, 10 POUND PG	BB-C-104	81348	LB	3	0	REV 7273	6830010117848
CARBON REMOVING COM-TY 2, 5 GAL PAIL	P-C-111	81348	GL	3	7	REV 7275	6850009652332
CARBON REMOVING COM -TYPE I, 1 GL CAN	MILC-19853	81349	GL	3	0	REV 7253	6850007028451
CARBON REMOVING COM-5 GL CAN	MIL-C-19853	81349	GL	3	0	REV 7237	6850005437801
CARBON REMOVING COM -55 GALLON DRUM	MIL-C-25107	81349	GL	3	0	REV 7211	6850002854321
CASTOR OIL, TECHNICA -GRADE 2,1 GAL CAN	JJJ-C-86	81348	GL	3	7	REV 7271	9150002617455

Downloaded from http://www.everyspec.com

CONSUMABLE ITEMS PART 2

NOMENCLATURE		P/N	FSCM	UM	EC	SL	ADDITIONAL INFO	NSN
CATALYST, ADHESIVE	-1 PT	VERSAMIDE 125	11884	PT	1	4	REV 7229	8040007121419
CELLOPHANE CL1, 1000 SHEETS PER PACKAGE	-LC110 TY5	L-C-110	81348	EA	3	0	REV 8006	8135005825170
CELLOPHANE LONG, 15 IN WIDE, 0 0011 THK, VII TY, CL 2	-ROLL 3200 FT	LC110	81348	FT	3	0	REV 8006	8135000615819
CEMENT AND ACCELERA	-1 QUART	1895C	73842	QT	3	0	REV 7273	8040010289866
CH-47D CH-47D CONSUMABLES	-MODEL RECORD FOR	CH-47D	77272	EA	A	0		
CH-54B CH-54B CONSUMABLE	-MODEL RECORD FOR	CH54B	81996	EA	A	0		
CHALK, MARKING BOX, COLOR WHITE	-GR ACOMP 1 144 PER TM 55-1500-204-25/1	SS-C-266	81348	EA	3	0	GR CONSUMABLE FOR	7510002236706
CHAMOIS LEATHER, SHE AND M SIZE	-B GRADE AND 2 CLASS	KK-C-300	81348	EA	3	0	REV 7253	
CHANNEL, STRUCTURAL T3511, LENGTH 10 MIN AND 12 FT MAX	-QQ-A-200/3 TEMPER	MS14366E019	96906	FT	1	0	REV 7253	9540011255198
CHLOROBENZENE, TECH -		MILC12038	81349	GL	3	0		
CHROMIUM TRIOXIDE, T -5 LB CAN		O-C-303	81348	LB	3	0	REV 7239	6810002646517
CITRICACID,ANHYDRO	-50 LB DRUM	MIL-C-11029	81349	LB	3	0	REV7229	6810001412942
CLEANER, LUBRICANTA	-1 GLBOTTLE	CLP-7	27412	GL	1	7	9150010536688	
CLEANINGANDLUBRIC	-TYPE 1, 16 OZ CAN	MILC83360	81349	OZ	3	6	REV 6357, 7254	6850000035295
CLEANING COMPOUND	-55 GL DRUM	ACTUSOL776	72008	GL	3	6	6850001817280	
CLEANING COMPOUND	-	AC-12	55208	GL				
CLEANING COMPOUND		CLARCO 2100-B-1	91608	GL				
CLEANING COMPOUND		COR CIR TK	57042	GL				
CLEANING COMPOUND		INTEX 8019	78304	GL				
CLEANING COMPOUND		METAL GLO 6	61102	GL				
CLEANING COMPOUND		M34H	21361	GL				

Downloaded from http://www.everyspec.com

CONSUMABLE ITEMS PART 2

NOMENCLATURE		P/N	FSCM	UM	EC	SL	ADDITIONAL INFO	NSN
CLEANING COMPOUND	-	715K	86460	GL				
CLEANING COMPOUND	-	FREONTF 16 OZ CAN	18598	CN				
		DELETED						
CLEANING COMPOUND	-	**10-620**	72653	CN				
CLEANING COMPOUND	-	CLARCO JEC-1	91608	DR				
CLEANING COMPOUND	-	CLARCOJEC	91608	DR				
CLEANING COMPOUND	-	JET STRIP SPECIAL	44389	DR				
CLEANING COMPOUND	-	MAGNUS 664-D	91838	DR				
CLEANING COMPOUND	-	OAKITE JET STRIPSPECIAL	44389	DR				
CLEANING COMPOUND	-	2006	05961	DR				
CLEANING COMPOUND	-	2128A	86460	DR				
CLEANING COMPOUND	-	4008-4	61102	DR				
CLEANING COMPOUND	-	7963 NP	21361	DR				
CLEANING COMPOUND	-	AERO-CLENE F	57042	GL				
CLEANING COMPOUND	-	AERO-CLENE PF	57042	GL				
CLEANING COMPOUND	-	BRULIN 1I-77N	94058	GL				
CLEANING COMPOUND	-	**C**-1-79	56921	GL				
CLEANING COMPOUND	-	CEE-BEE R-677	71361	GL				
CLEANING COMPOUND	-	CLARCO 124F	91608	GL				
CLEANING COMPOUND	-	ED-366	55208	GL				
CLEANING COMPOUND	-	FH-119	82925	GL				
CLEANING COMPOUND	-	LEEDER 120-F	17209	GL				
CLEANING COMPOUND	-	OAKITE 214M	44389	GL				
CLEANING COMPOUND	-	TURCO 5975 A	61102	GL				

Downloaded from http://www.everyspec.com

CONSUMABLE ITEMS PART 2

NOMENCLATURE	P/N	FSCM	UM	EC	SL	ADDITIONAL INFO	NSN
CLEANING COMPOUND,A -AIRCRAFT SURFACE, 55 GAL DRUM	MIL-C-25769	81349	GL	3	0	REV 7273	6850009350995
CLEANING COMPOUND,A -CLASS 1,55 GL DRUM	MIL-C43616	81349	GL	3	0	REV 7254	6850010457931
CLEANING COMPOUND,A -CLASS 1A, 16 OZ AEROSOL CAN	MILC43616	81349	OZ	3	6	REV 6232, 7254	6850000055305
CLEANING COMPOUND,A -MILC-38334, TY1, CL1, 5 GALLONS	MIL-C-38334	81349	GL	3	H	REV 7159	6850005272426
CLEANING COMPOUND,A -MIL-C43616 CL 2, 5 GL PAIL	MIL-C-43616	80244	GL	3	0	REV 7239	6850001449816
CLEANING COMPOUND,A -MIL-C43616 CLASS 2, 15 GL DRUM	MIL-G43616	81349	GL	3	0	REV 7240	6850001805942
CLEANING COMPOUND,A -MILC-81964 TY1	MILC-81964	81349	OZ	3	6	16 OUNCE AEROSOL CAN	6850001487161
CLEANING COMPOUNDA -OAKITE 214M CONFORMS TO MIL13616, CL-1 5 GL CAN	OAKITE 214M	44389	GL	3	0	REV 7224	6850010457929
CLEANING COMPOUND,A -1 GL CAN	MIL-C-27251	81349	GL	3	0	REV 7254	6850006827533
CLEANING COMPOUND,A -100 LB DRUM	PC436	81348	LB	3	0	REV 7253	6850006647530
CLEANING COMPOUND,A -5 GL CAN	MIL-C-87936	81349	GL	3	0	TO EST REPL FOR 6850-00-935-0996	6850011847453
CLEANING COMPOUNDA -55 GAL DRUM	MILD26549	81349	GL	3	0	REV 7209	6850005971528
CLEANING COMPOUNDA -55 GALLON DRUM	CLARCO JEC-1	91608	GL	3	0	REV 7211	6850005971528
CLEANING COMPOUNDA -55 GL DRUM	MILC25769	81349	GL	3	0	REV 7253	6850009350995
CLEANING COMPOUND,A -55 GL DRUM, TYPE 1	MILC-87936	81349	GL	3	0		6850011843182
CLEANING COMPOUND,E -16 OUNCE AEROSOL CAN	BANDB3100	21361	OZ	3	0	REV 7211	6850001817594
CLEANING COMPOUND,E -5 GAL CAN, USED IN INSTALLED ENGS DURING STARTER OPERATION	MILC85704	81349	GL	3	0	REV 7275	6850001817594
CLEANING COMPOUND,H -SYMBOL 5190,125 LB DRUM	PC437	81348	LB	3	6	REV 6357, 7253	6850002560157
CLEANING COMPOUND,H -TYPE 1, 150 LB DRUM	P-C437	81348	LB	3	4	REV 7271	6850009652330
CLEANING COMPOUND,P -100 GALLON DRUM	MACDERMID SCRUB H	76071	LB	1	0	REV 7157	6850010190665

Downloaded from http://www.everyspec.com

CONSUMABLE ITEMS PART 2

NOMENCLATURE	P/N	FSCM	UM	EC	SL	ADDITIONAL INFO	NSN
CLEANING COMPOUND,S -	02016	10136	OZ	1	0	REV 6230	6850001053084
CLEANING COMPOUND,S -	02016	10136	OZ	1	0	REV 6230	6850001053084
CLEANING COMPOUND,S -	S237-6973-160Z	48294	OZ	1	0	REV 6230	6850001053084
CLEANING COMPOUND,S -	S237-6973-160Z	54418	OZ	1	0	REV 6230	6850001053084
CLEANING COMPOUND,S -	02016	10136	OZ	1	0	REV 6230, 6302	6850001053084
CLEANING COMPOUND,S -	237-6973-16OZCAN	54418	OZ	1	0	REV 6230	6850001053084
CLEANING COMPOUND,S -	8202	32204	GL	3	0	REV 6232	7930002618954
CLEANING COMPOUND,S -	6G236-6	80063	GL	3	6	REV 6232, 6357, 7253	6850005979765
CLEANING COMPOUND,S -CLEANING COMPOUND LIQUID SOLVENT DETERGENT, 1 GL CAN	BIGBARE	32204	GL	3	0	REV 7233	7930002618954
CLEANING COMPOUND,S -MIL-C81302 TYPE II A, 16 OZ CAN AEROSOL	MIL-C-81302	81349	OZ	3	0	REV 7157	6850001053084
CLEANING COMPOUND,S -SOLVENT, 55 GAL DRUM	0-C-1889	81348	GL	3	3	REV 7273	6850002097947
CLEANING COMPOUND,S -TYPE 1, 5 GAL CAN	P_444	81348	GL	3	6	REV 7271	6850009652331
CLEANING COMPOUND,S -TYPE 2, 11 LB CAN	MIL-C-81302	81349	LB	3	6	REV 7254	6850003190834
CLEANING COMPOUND,S -TYPE 2,55 GL DRUM	MIL-81302	81349	GL	3	0	REV 7254	6850006815688
CLEANING COMPOUND,S -TYPE 2, 6 OZ BOTTLE	MIL-81302	81349	OZ	3	0	6 OZ BT CONSUMABLE FOR TM 55-1520-210-23-1	6850009351082
CLEANING COMPOUND,S -1 GL CAN	0-C1889	81348	GL	3	6	REV 7253	6850005979765
CLEANING COMPOUND,S -55 GAL DRUM	MIL-C6864	81349	GL	3	0	55 GL DR CONSUMABLE FOR TM 55-1520-210-23-1	6850005513694
CLEANING COMPOUND,S -55 GAL DRUM	657	61102	GL	3	0	REV 7275	6850008101762
CLEANING CDMPOUND,S -TYPE 1, 5 GL CAN	MILC81302	81349	GL	3	0	REV 7254	6850000338851
CLEANING, COMPOUND -	STRIPPER 156	44389	GL	3	0	6850012687367	
CLOTH, ABRASIVE -P i451 TY1 CL1 240 GRIT, 50 SHEETS PER PACKAGE	P-C-451	81348	SH	3	0	REPLACES H2H701CNCM	5350001619715

Downloaded from http://www.everyspec.com

CONSUMABLE ITEMS PART 2

NOMENCLATURE	P/N	FSCM	UM	EC	SL	ADDITIONAL INFO	NSN
CLOTH, ABRASIVE -120 GRIT, 9 X 11 IN SHEET 50 PER PG	A-A-1200	58536	EA	3	0	9 X 11 SH 50 SH PER PG CON SUMABLE FOR TM 55-1520-210-23-1	
CLOTH, ABRASIVE -	A-A-1206	58536	SH				
CLOTH, ABRASIVE -	**P-C-451**	81349	SH	1	0	REV 6231	
CLOTH, ABRASIVE	C320	70752	BD		0		5350001740997
CLOTH, ABRASIVE -A-A-1049 91N WIDE AND 11 IN LONG, EMERY CLOTH, 50 SH PER PG	A-A-1049	58536	EA	3	0	REV 7349	5350005844653
CLOTH, ABRASIVE -A-A-1 049 91N WIDE AND 11 IN WIDE, 100 GRIT ALUMIINUM OXIDE	A-A-1 049	58536	EA	3	0	REV 7349	5350005844654
CLOTH, ABRASIVE -EMERY, COURSE, 9 X11 INCHES, 50 SHEETS PER PG	A-A-1049	58536	EA	3	0	REV 7273	5350005844660
CLOTH, ABRASIVE -GRIT SIZE 36 TY1, CL1 SIZE 9 X 11 IN. EACH	PC451TYPE1CLASS1	81348	SH	3	0	REV 7225	5350001929319
CLOTH, ABRASIVE -GRIT 120, TYPE 1, CLASS 1, SIZE 9 X 11 IN.	PC451	81348	EA	3	0	REV 7275	5350006382693
CLOTH, ABRASIVE -GRIT 180 FINE, SIZE 9 X 11 IN, 25 SH PER BUNDLE	PPP-B-1055	81348	EA	3	0	REV 7350	
CLOTH, ABRASIVE -GRIT 600, EXTRA FINE, SIZE 3.67 X 9 IN, 100 SH PER BUNDLE	GGGC520	81348	EA	3	0	REV 8004	5350001740985
CLOTH, ABRASIVE -P{451 TY1 CL1 180 GRIT, 50 SHEETS PER PACKAGE	PC-451	81348	SH	3	0	REV 7161	5350001925051
CLOTH, ABRASIVE -P-C-451 TY1 CL2, 1 5 IN WD ROLL	A-A-1048	58536	EA	3	0	REV 7232	5350001619066
CLOTH, ABRASIVE -P458, TY1, CL1, 50 SHEETS PER PACK	P-C-458	81348	SH	3	0	REV 7198	5350002210872
CLOTH, ABRASIVE -SILICON CARBIDE 400 GRIT 9 X 11 IN SHEET, BUNDLE OF 25	A-A-1200	58536	SH	1	0	REV 7349	
CLOTH, ABRASIVE -TYPE 1 AND CLASS 1, 120 GRIT, 9 X 11 IN SHEET 50 PER PG	PC451	81348	EA	3	0	9 X 11 SH 50 SH PER PG CON SUMABLE FOR TM 55-1520-210-23-1	5350006382693
CLOTH, ABRASIVE -1TY, 1CL, 400 GRIT, 9 X 11 INCHES, 50 SHEETS PER PG	A-A-1048	81348	EA	3	0	REV 7273	

Downloaded from http://www.everyspec.com

CONSUMABLE ITEMS PART 2

NOMENCLATURE		P/N	FSCM	UM	EC	SL	ADDITIONAL INFO	NSN
CLOTH, ABRASIVE 1 TYPE, 9 X 11 INCHES, 50 SHEETS PER PG	-100 GRIT, FINE,	A-A-1 048	58536	EA	3	0	REV 7273	5350001619066
CLOTH, ABRASIVE SHEET, 50 EACH PER PACKAGE	-120 GRIT, 9 X11	A-A-1048	58536	EA	3	0	REV 7261	5350001925049
CLOTH, ABRASIVE 1 TYPE, 9X 11 INCHES, 50 SHEETS PER PG	-150 GRIT, FINE,	A-A-1048	58536	EA	3	0	REV 7345	5350001925050
CLOTH, ABRASIVE	-240 GRIT, 50 YD ROLL	A-A-1 048	58536	YD	1	0	REV 6357, 7257	5350001876289
CLOTH, ABRASIVE 50 EA PER PACKAGE	-240 GRIT, 9 X 11 IN	A-A-1200	58536	EA	3	0	9 IN X 11 IN LONG, 50 EA PER PG CONSUMABLE FOR	
CLOTH, ABRASIVE	-320 GRIT 50 YD ROLL	A-A-1048	58356	YD	3	0	REV 6357, 7257	5350002293092
CLOTH, ABRASIVE PER PG	-320 GRIT, 50 SHEETS	A-A-1 048	58536	EA	3	0	REV 7273	5350002460330
CLOTH, ABRASIVE GRIT, 9 X 11 INCHES, 50 SHEETS PER PG	-80 GRIT, MED	A-A-1048	58536	EA	3	0	REV 7345	5350001925047
CLOTH, AIRPLANE	-MILC5646 36 IN WIDE	MILC5646	81349	YD	3	0	REV 7239	8305001913977
CLOTH, BALLISTIC COLOR GREEN #106	CLASS 2, 48 IN WIDE	MILC12369	81349	SY	3	0	USED FOR REPAIR OF ARMOR SPALL SHIELDS TM 55-1500-204-25/1	
CLOTH, BALLISTIC COLOR NATURAL	CLASS 2,48 IN WIDE	MILC12369	81349	SY	3	0	USED FOR REPAIR OF ARMOR SPALL SHIELD TM 55-1 500-204-25/1	8305010253747
CLOTH, BALLISTIC WIDE, COLOR #106	-CLASS 1,48 IN	MILC12369	81349	SY	3	0	USED FOR REPAIR OF ARMOR SPALL SHIELDS TM 55-1500-204-25/1	8305007826354
CLOTH, BALLISTIC COLOR NATURAL	-CLASS 1,48 IN WIDE	MILC12369	81349	SY	3	0	USED FOR REPAIR OF ARMOR SPALL SHIELDS TM 55-1500-204-25/1	8305007826354
CLOTH, CHEESECLOTH	-	840492	19203	YD	1	0	REV 6230	8305002222423
CLOTH, CHEESECLOTH CL-B, SQUARE YARD	-CCC-440 TY-2	CCCC440	81348	YD	1	0	REV 7351	8305002673015
CLOTH, CHEESECLOTH IN WIDE, LENGTH IN YARDS	-CCCG441 .TY1, CL1,38	CCCC440 TY1, CL1	81348	YD	3	0	REV 7161	8305002222423
CLOTH, CHEESECLOTH 10 LB PACKAGE	-TYPE 1 AND CLASS A,	DDDC301	81348	LB	3	0	REV 7271	8305001412503

Downloaded from http://www.everyspec.com

CONSUMABLE ITEMS PART 2

NOMENCLATURE	P/N	FSCM	UM	EC	SL	ADDITIONAL INFO	NSN
CLOTH, CHEESECLOTH -TYPE 1 AND CLASS 2, 50 YD ROLL 38 5 IN WIDE	CCCC-440	81348	YD	3	0	REV 7271	8305002623321
CLOTH, CHEESECLOTH -5 YD PACKAGE	588125	75271	YD	3	0	5 YD PG CONSUMABLE FOR TM 55-1520-238-23	8305011250725
CLOTH, CLEANING -COLOR-TAN #23594, 1000 EA 15 IN X 12 IN	A-A-162	58536	EA	3	0	REV 7271	7920002929204
CLOTH, CLEANING -MIL-C-85043 TY2, 10 LB BOX	MIL-C-85043	81349	EA	3	0	REV 7156	7920000449281
CLOTH, CLEANING -MIL-C-85043, TY2, 10 LB BOX	MIL-C-85043	81349	EA	3	0	REV 7212	7920000449281
CLOTH, COATED -MILC8068 TY 2 COLOR BLACK, 0 0206 IN THICK AND 46 IN WIDE	MILC8068	81349	YD	3	0	REV 7240	8305006415603
CLOTH, COATED -1 TYPE 52 IN WIDE FIRE RESISTANT AND WATERPROOF, COLOR GRAY	MILC22787	81349	YD	3	0	REV 7275	8305005144263
CLOTH, COATED -36 IN WIDE, FIRE RESISTANT	MILC27347	81349	YD	3	0	REV 7253	8305001388948
CLOTH, FELT -TYPE 1, 60 IN WIDE AND 0625 THICK	CF206	81348	SF	3	0	60 IN WIDE AND 0.0625 THICK CONSUMABLE FOR TM 55-1520-210-23-1	8305002621672
CLOTH, FIBERGLASS -	MIL-C-7637	81349	YD	3	e		
CLOTH, FLANNEL -CCCC458 36 IN MIN TY-III CL-2 WHITE IN COLOR	CCCC458	81348	YD	1	0	REV 7232	8305006415606
CLOTH, LAMINATED -NYLON, 25 OZ PER SQ YD, 2 PLY, BLACK, 34 IN DIA.	FT136	73842	YD	3	0	REV 7273	8305003505592
CLOTH, LAMINATED -NYLON 30 OZ PER SQ YD, 40 IN WIDE, LENGTH 1 YD	5200-5187-5194	89616	YD	3	0	REV 7273	9320005998440
CLOTH, NONWOVEN -TY I, CL 2, WHITE #37886, 36 IN WD 50 YD ROLL	CCCC46	81348	YD	3	0	REV 7271	8305007532967
CLOTH, PREIMPREGINAT -EACH	CYCOM 950/220	70361	EA	1	0	REV 7232	1680011968355
CLOTH, PREIMPREGINAT -YARD	FR8600/281	26348	YD	1	0	REV 7232	1680011968355
CLOTH , PREIMPREGNAT - IFRR CLEAR/7581	86281		YD	3	F	MAKE APPENDIX	1680012184374
CLOTH, SATIN -MILC9084 TYPE X AND CLASS 1 38 IN WIDE, YARD	MILC9084	81349	YD	3	0	REV 7240	8305000826135

Downloaded from http://www.everyspec.com

CONSUMABLE ITEMS PART 2

NOMENCLATURE		P/N	FSCM	UM	EC	SL	ADDITIONAL INFO	NSN
CLOTH, SATIN NATURAL, 38 IN WIDE	-TY 7, CL 1, COLOR	MIL-C-9084	81349	FT	3	0	REV 7274	8305005300109
CLOTH, SATIN 38 IN COLOR NATURAL TRADE DESIGN, 181	-TYPE VIII CL 2, WIDTH	MIL-C-9084	81349	EA	3	0	REV 7225	8305010072672
COATING AND SEALANT	-1 GL CAN	02-GY-3	33461	QT	1	0	REV 7232	8030012575774
COATING COMPOUND F CAN	-FLUORESCENT, 1 GAL	MIL-P-21600	81349	GL	3	6	1 GAL CN TM 55-1500-345 -23	8010000822421
COATING COMPOUND ME GAL AND 2 GAL CONTAINERS	-KIT CONTAINING AN 8	MILP15328	81349	GL	3	4	KIT CONTAINING AN 8 GAL AND 2 GAL CONTAINERS TM 55-1500-345-23	8030002812726
COATING COMPOUND,ME ONE 1 GAL BOTTLE	-KIT, ONE 4 GAL AND	MIL-C-8514	81349	EA	3	4	REV 7275	8030000822425
COATING COMPOUND,ME	-MIL-tC8514 5 GAL KIT	MILC8514	81349	GL	1	4	REV 7232	8030000822425
COATING COMPOUND,ME	-1 GAL KIT	MIL-C-8514	81349	GL	3	4	1 GAL KIT TM 55-1500-345-23	8030010156104
COATING COMPOUND,ME	-1 PT KIT	PR-420	05027	PT	3	4	REV 7240	8030005755985
COATING COMPOUND, PL PLASTIC SQUEEZE	4 OUNCE BOTTLE	VC3	04866	EA	3	S	REV 7219	8030001635792
COATING KIT, ALUMINUM DEOXIDINE, 1 QT BOTTLE ALODINE	-KIT, 1 QT BOTTLE	CHEMICAL KIT 120	84063	QT	3	6	REV 7351	8030007794699
COATING KIT, RAIN ER	-CL 1, 1 GAL KIT	MIL-C-83445	81349	GL	3	4	1 GAL KIT TM 55-1500-345-23	8010011322976
COATING KIT, RAIN ER GAL BASE AND REQ AMT OF ACTIVATOR	-TY II CL A BLACK, 1	MIL-C83231	81349	GL	3	4	1 GAL BASE AND REQ AMT OF ACTIVATOR TM 55-1 500-345-23	8010004591756
COATING, MOLYKOTE	-	321	71984	OZ				
COATING, MOLYKOTE	-	321R	71984	OZ				
CORD FIBROUS 0.188 **DIA400 YD** SPOOL	-OLIVE DRAB, TY3,	P5006-4G	81755	YD	3	0	REV 7275	4020002460688
CORD, FIBROUS SIZE 12 COLOR NATURAL	-T-C-571 TY 1 CL 2	TC571	81348	FT	3	0	REV 7240	4020002402142
CORD, FIBROUS	-TYPE 3, 700 YD SL	MILC5040	81349	FT	3	0	REV 7271	4020002402146
CORD, FIBROUS	-400 YARD SPOOL	MILC5040	81349	YD	3	0	REV 7238	4020002460688

Downloaded from http://www.everyspec.com

CONSUMABLE ITEMS PART 2

NOMENCLATURE		P/N	FSCM	UM	EC	SL	ADDITIONAL INFO	NSN
CORD, FIBROUS	-500 YD SPOOL	MILC5040	81349	YD	3	0	REV 7238	4020002402154
CORROSION PREVEN	-TYPE 2, 55 GAL DRUM	MILC6529	81349	GL	3	7	REV 7271	6850002097234
CORROSION PREVEN TM 55-1520-210-23-1	-TYPE 3, 5 GAL CAN	MIL-C-6529	81349	GL	3	7	5 GL CN CONSUMABLE FOR	6850002097230
CORROSION PREVEN TM 55-1520-210-23-1	-5 GAL CAN	MIL-C-8188	81349	GL	3	7	5 GL CN CONSUMABLE FOR	6850002732395
CORROSION PREVENTIVE-		MIL-16173 GR1	80244	GL				
CORROSION PREVENTIVE-		945011	19203	GL	1	5		8030002312345
CORROSION PREVENTIVE-		WD40	09137	OZ	3	4		8030008387789
CORROSION PREVENTIVE-		LPS-2	32861	OZ		4		8030008387789
CORROSION PREVENTIVE-		MILC23411	81349	OZ				
CORROSION PREVENTIVE-		310AC	76842	QT				
CORROSION PREVENTIVE	-CAN 8 OZ	BRAYCO 599	98308	OZ	3	7	REV 7351	6850001429582
CORROSION PREVENTIVE	-CLASS 1,5 LB CAN	MIL-C-11796	81349	LB	3	7	REV 7271	8030002312354
CORROSION PREVENTIVE	-CLASS 1A, 35 LB CAN	MILC11796 CLASS 1A	81349	LB	3	0	35 LB CN CONSUMABLE FOR TM 55-1520-210-23-1	8030008238054
CORROSION PREVENTIVE	CLASS 3, 35 LB CAN	MIL-C-11796	81349	LB	3	7	REV 7271	8030002851570
CORROSION PREVENTIVE	-GRADE 4, 1 PT CAN	MIL-C16173	81349	PT	3	5	REV 6357,7257	8030009030931
CORROSION PREVENTIVE CAN	-MIL-C-15074 1 QT	MILC15074-1 QTCN	81349	QT	1	4	REV 7229	8030006644017
CORROSION PREVENTIVE 2,1 GL CAN	-MIL-C-16173 GRADE	MIL-C-16173	81349	GL	3	5	REV 7239	8030002441297
CORROSION PREVENTIVE 4, 1 GL CAN	-MIL-C-16173 GRADE	MIL-C-16173	81349	GL	3	5	REV 7240	8030000625866
CORROSION PREVENTIVE 1,1 GALLON CAN	-MIL-C-16173, GRADE	MIL-C-16173	81349	GL	1	5	REV 7156	8030002312345
CORROSION PREVENTIVE 2, 1 GALLON CAN	-MIL-C-16173, GRADE	MIL-C-16173	81349	GL	3	5	REV 7156	8030002441297

Downloaded from http://www.everyspec.com

CONSUMABLE ITEMS PART 2

NOMENCLATURE		P/N	FSCM	UM	EC	SL	ADDITIONAL INFO	NSN
CORROSION PREVENTIVE	-MIL-C-16173, GRADE 4	MIL-C-16173	81349	GL	3	5	5 GAL PAIL	8030005261605
CORROSION PREVENTIVE AEROSOL CAN	-TYPE 1, 16 OZ	MIL-C-85054	81349	OZ	3	4	REV 8034	8030010411596
CORROSION PREVENTIVE	-TYPE 1, 5 GL CAN	MIL-6529	81349	GL	3	7	REV 7253	6850002812031
ORROSION PREVENTIVE	-TYPE 1, 5 GL CAN	MILC81309	81349	GL	3	4	REV 6357, 7257	8030002627358
CORROSION PREVENTIVE 16 OZ AEROSOL CAN	-TYPE 2 CLASS 2,	MIL-C-81309	81349	OZ	3	4	REV 6357,7257	8030009381947
CORROSION PREVENTIVE 16 OZ AEROSOL CAN	-TYPE 3 AND CLASS 2,	M81309B2	81349	OZ	3	4	REV 6357, 7257	8030005468637
CORROSION PREVENTIVE	-1 GL CAN	SERMETEL W	78710	GL	1	4	REV 7223	8030001450039
CORROSION PREVENTIV APPLICATION, 5 GAL CAN	E-1 GR, COLD	MIL-C-16173	81349	GL	3	5	REV 7273	8030002441299
CORROSION PREVENTIVE	-120 LB DRUM	MIL-C-5545	81349	LB	3	7	REV 7271	6850002744169
CORROSION PREVENTIVE	-5 GAL CAN	MILC4339	81349	GL	3	7	REV 7271	6850002249582
CORROSION PREVENTIVE	-5 GAL CAN	RUSTLICK606	14098	GL	3	0	5 GL CN CONSUMABLE FOR TM 55-1520-210-23-1	6850000662333
CORROSION PREVENTIVE	-5 GAL PAIL	RUSTLICK606	14098	GL	3	0	REV 7280	6850000662333
CORROSION PREVENTIVE	-5 GALLON PAIL	RUSTLICK606	14098	GL	3	0	REV 8039	6850000662333
CORROSION PREVENTIVE	-5 LB CAN CLASS 3	MILC11796CL3-5LBCN	81349	LB	3	7	REV 8035	8030002312353
CORROSION REMOVING	-TYPE 2, 1 GAL BOTTLE	MILC10578	81349	GL	3	0	REV 7271	6850001749672
CORROSION REMOVING	-TYPE 2, 1 GAL BOTTLE	MILC10578	81349	GL	3	0	REV 7280	6850001749672
CORROSION REMOVING	-TY 3, 5 GAL DRUM	MILC10578	81349	GL	3	0	REV 7275	6850008547952
CORROSION REMOVING	-TYPE 1, 425 LB DRUM	MIL-C-46156	81349	LB	3	0	425 LB DR CONSUMABLE FOR TM 55-1520-210-23-1	6850009355853
CORROSION REMOVING	-TYPE 2, 5 GAL DRUM	MIL-C-10578	81349	GL	3	0	REV 7273	6850006561292
CORROSION REMOVING	-TY1, 15 GL DRUM	MILC10578	81349	GL	3	0	REV 8035	6850009265298
CORROSION REMOVING	-500 LB DR TYPE 1	MIL-14460	81349	LB	3	0	REV 7209	6850005505565
CORROSION RESISTANT	-	ALODINE600	84063	QT	3	6		8030008113723

Downloaded from http://www.everyspec.com

CONSUMABLE ITEMS PART 2

NOMENCLATURE		P/N	FSCM	UM	EC	SL	ADDITIONAL INFO	NSN
CORROSION RESISTANT B, 4 OZ JAR	-CL A, FORM 2, METHOD	MIL-C-81706	81349	OZ	3	6	REV 7274	8030010182838
CORROSION RESISTANT 3, METHOD B, 1 GL BT	-CLASS 1A, FORM	IRIDITE14ALCOAT	99442	GL	3	4	REV 7257	8030008238039
CORROSION RESISTAN AND METHOD B	T -CLASS 3 AND FORM 2	MIL-C-81706	81349	LB	3	6	REV 7257	8030010182838
CORROSION RESISTANT METHOD B, 2 LB CAN	-MILC81706CL1A, FORM 2,	MILC81706	81349	EA	3	6	REV 7156	8030008113723
CORROSION RESISTANT CLASS 1 OR 2, 1 PT CAN	-TYPE 1 AND GRADE B,	MIL-C-81706	81349	PT	3	4	REV 7257	8030001429272
CORROSION RESISTANT AND METHOD B, 2 LB PACKAGE	-1ACLASS AND 2 FORM	MIL-C-81706	81349	LB	3	6	REV 8007	8030008113723
CORROSION RESISTANT FORM, METHOD B	-2 LB, 1ACLASS, 2	ALODINE600	84063	LB	3	6	REV 7275	8030008113723
CORROSION RESISTANT 1 PINT CAN	-3 FORM, B METHOD,	MIL-C-81706	81349	PT	3	6	REV 7273	8030010182838
CORROSION RESISTANT	-4 OZ JAR	ALODINE1200S	84063	OZ	3	6	REV 7218	8030000572354
COVER, ELECTRICAL CO	-EACH	G243640-19	64959	EA	3	0	REV 7223	5340008219839
COVER, ELECTRICAL CO	-EACH	883859	19203	EA	3	0	REV 7223	5935008007685
CUP, PAPER TY 4, STA, CL 3, 1000 PER BOX	-UU-C-806	UU-C-806	81348	EA	3	0	REV 7198	7350009038144
CUPRIC SULFATE	-5 GL CAN	O-C-828	81348	GL	3	7	REV 7225	
CUSHIONING MATER	945010	19203	FT	1	0	REV 6231		8135006640057
CUSHIONING MATER AND 20 IN WIDE AND 1 IN THICK,	-PPPC843 60FT LONG	PPPC843	81348	FT	3	0	REV 7238	8135006646958
CUSHIONING MATER 6 FT LONG 24 IN WD 21 IN THK, 12 TO PACK	-TY IV GRADE A FEALT	945010	19203	EA	3	0	REV 7275	8135006640057
CUSHIONING MATER RED #211059,2 IN TK X 24 IN WD 6 FT LG	-TYPE 4 AND GRADE A	PPPC1120	81348	DZ	3	0	2 IN THICK X 24 IN WIDE X 6 FT LONG 12 PER BX	8135006640057
CUSHIONING MATER IN TK 12 PER BOX	-24 IN WD 6 FT LG 2	945010	19203	FT	3	0	REV 7223	8135006640057

Downloaded from http://www.everyspec.com

CONSUMABLE ITEMS PART 2

NOMENCLATURE	P/N	FSCM	UM	EC	SL	ADDITIONAL INFO	NSN
CUSHIONING MATERIAL -TYPE 1 AND CLASS I AND GRADE R, 32 IN 2 66 FT 0 125 TK SHEET	PPP-C-850	81348	EA	3	0	REV 7271	8135008923917
CUSHIONING MATERIAL -TYPE2ANDCLASSB, 40 IN WIDE X 370 IN THICK X 165 LONG	PPPC843	81348	FT	3	0	40 IN WIDE X 0 370 IN THICK X 165 FT LONG	8135001838814
CUSHIONINGMATERIAL -TYPE2ANDCLASS 1 TM 55-1500-343-23	PPP-C-1752	81348	FT	3	0	60 FT RO CONSUMABLE FOR	8135001805922
CUSHIONING MATERIAL -TYPE4ANDCLASSA, 36 IN WIDE X 100 FT ROLL	PPP-C-1120	81348	FT	3	0	REV 7271	8135002929800
CUSHIONING MATERIAL -165 FT LONG 40 IN WIDE 0 370 THICK TY 2 CL B PLASTIC MATERIAL	PPPC843	81348	EA	3	0	REV 7275	8135001838814
CUSHIONING MATERIAL -450 FT ROLL	PPPC1797	81348	FT	3	0	REV 6357, 7257	8135003004904
CUSHIONING MATERIAL -500 FT ROLL	A-A-549	58536	FT	3	0	REV 7257	8135001429016
CUSHIONING MATERIAL -500 FT ROLL	A-A-549	58536	FT	3	0	REV 7257	8135001429005
CUSHIONING MATERIAL -500 FT ROLL	A-A-549	58536	FT	3	0	REV 7257	8135001429008
CUSHIONING MATERIAL -77 IN LONG AND 30 IN WIDE BY 1 5 IN THICKNESS SHEET	MIL-P-26514	81349	SH	3	0	REV 7238	8135001817456
CUSHIONING, MATERIAL -250 FT ROLL	A-A-549	58536	FT	3	0	REV 7257	8135001429004
CUTTING FLUID -GR B TY 1 5 GAL CAN	VV-C-850	81348	GL	3	7	REV 7280	9150008838478
CUTTING FLUID -TY I 55 GAL DRUM	VV-C-846	81348	GL	3	7	REV 7280	9150002618144
CUTTING FLUID -5 GAL CAN	C-O-376	81348	GL	3	7	REV 7271	9150002319054
CUTTING FLUID -55 GAL DRUM	MILC46149	81349	GL	3	7	REV 7280	9150000048990
DAMPING FLUID -1 LB CAN	VV-D-1078	81348	LB	1	6	REV 7229	9150002698246
DAMPING FLUID -1 LB CAN	VV-D1078	81348	LB	3	6	REV 7273	9150002698246
DAMPING FLUID -1 POUND CAN	W-D-1078	81348	LB	3	6	1 QT CAN	9150008644973
DAMPING FLUID -8 LB CAN	DC 200 1OCSTKS	71984	LB	3	0		
DEICING-DEFROSTING -TYPE 1, 55 GL DRUM	MIL-A-8243	81349	GL	3	7	REV 7253	6850005581248
DEICING-DEFROSTING -5 GALLON CAN	MIL-A-8243	81349	GL	3	7	REV 7238	6850009010591

Downloaded from http://www.everyspec.com

CONSUMABLE ITEMS PART 2

NOMENCLATURE	P/N	FSCM	UM	EC	SL	ADDITIONAL INFO	NSN
DEPRESSOR,TONGUE,WO-	GG-D-226	81348	EA	3	0	100 TO A BOX	6515007534533
DEPRESSOR,TONGUE,WO-2 TYPE, 61N LONG X 0 750 WIDE, 500 PER BOX	GG-D-226	81348	EA	3	0	REV 7280	6515007534533
DESICCANT, ACTIVATED -	EAGLE GEL A	18425	DR				
DESICCANT, ACTIVATED -	EAGLE GEL B	18425	DR				
DESICCANT, ACTIVATED -	PROTEK-SORB 121	16210	DR				
DESICCANT, ACTIVATED -	40249-1	80254	EA	1	0	REV 6231	6850002646572
DESICCANT, ACTIVATED -	8790670-1	19203	EA	1	0	REV 6231	6850002646572
DESICCANT, ACTIVATED -MIL-D-3464 300 BAGS PER DRUM, TYPE 1	MIL-D-3464	81349	EA	3	0	REV 7239	6850002646571
DESICCANT, ACTIVATED -150 EACH PER DRUM	MIL-D-3464	81349	EA	3	0	REV 7211	6850002646572
DESICCANT, ACTIVATED -250 BAGS PER 5 GAL CAN	429-001-124	07421	EA	3	0	REV 7275	6850002646562
DESICCANT, ACTIVATED -5 GL CAN	MIL-D-3464	81349	EA	3	0	REV 7237	6850002646573
DESICCANT, ACTIVATED -TYPE 1, 5 BAGS PER CAN	MIL-D-3464	81349	EA	3	0	REV 7271	6850009991094
DESICCANT, ACTIVATED -TYPE 1, 500 BAGS PER DRUM	MILD3464	81349	EA	3	0	REV 7257	6850002646574
DETERGENT, GENERAL P -NONMEDICATED LIQUID TY2, 55 GAL DRUM	P-D-220	81348	GL	3	0	REV 7275	7930005271237
DETERGENT, GENERAL P -TYPE 1, 1 GL CAN	MIL-D-16791	81349	GL	3	0	REV 6357, 7257	7930002829699
DETERGENT, GENERAL P -TYPE 1, 5 GAL CAN	A-A-39	58536	GL	3	0	REV 7271	7930005262919
DETERGENT, GENERALP -TYPE 1, 5 GL PAIL	MIL-D-16791	81349	GL	3	7	REV 6357, 7257	7930009856911
DETERGENT, GENERALP -TYPE 2, 55 GAL DRUM	P-D-220	81348	GL	3	0	55 GL DR CONSUMABLE FOR TM 55-1520-210-23-1	7930005271237
DICHLOROMETHANE, TEC-GR B, 5 GAL CAN	MIL-D-6998	81349	GL	3	0	5 GAL CAN TM 55-1500-345-23	6810002440290
DIESEL FUEL -GR DF-A5 GAL CAN	WF800GRADEDFAAR	81348	GL	3	0	REV 7280	9140002865282

Downloaded from http://www.everyspec.com

CONSUMABLE ITEMS PART 2

NOMENCLATURE		P/N	FSCM	UM	EC	SL	ADDITIONAL INFO	NSN
DIESEL FUEL	-GR DF-2 55 GAL DRUM	VVF800GRADEDF2RE	81348	GL	3	0	REV 7280	9140002865296
DIESEL FUEL	-GR F-75 5 GAL CAN	MILF16884	81349	GL	3	0	REV 7280	9140002557764
DIETHYLENE GLYCOL M	-1 GALLON CAN	BUTYLCARBITOL	20638	GL	3	0	REV 7157	6810003518185
DIETHYLENETRIAMINE, OZ BOTTLE	-0-D-1271 LIQUID, 16	O-D-1271	81348	OZ	3	7	REV 7240	6810009954804
DIETHYLENETRIAMINE,	-16 OZ BOTTLE	O-D-1271	81348	OZ	3	7	REV 8036	6810009954804
DIP COMPOUND, SLEEVE -	AE10187-001	00624		OZ	3	4		8030009070879
DISCHARGER, ELECTROS	-8 INCHES LONG	5020-8 INCHES	52942	EA	3	0	REV 7219	5920011544719
DISHWASHING COMP OR SACK	-CLASS 2, 50 LB BOX	A-A-5	58536	LB	3	0	REV 6357, 7253	7930002814731
DISHWASHING COMP PLASTIC BOTTLE	-TYPE 2, 1 GL CAN OR	P-D-410	81348	EA	3	0	REV 6357, 7253	7930008804454
DISHWASHING COMP	-TYPE 2, 6 LB BOX	P-D410	81348	EA	3	0	6 LB BOX CONSUMABLE FOR TM 55-1520-210-23-1	7930008804454
DISINFECTANT, GENERAL	-TYPE 1, 25 LB DRUM	O-D-1277	81348	LB	3	0	REV 6357, 7253	6840005513698
DISTILLED WATER, ACS DRUM	-5 GL POLYETHYLENE	O-C-265	81348	GL	3	0	REV 7257	6810001071510
DISTILLED WATER, TEC	-	6170-18-7	53390	OZ		0		6810010701784
DISTILLED WATER, TEC	-2 OZ BOTTLE	6170-18-7	53390	OZ	3	0	REV 7157	6810010701784
DISTILLED-DEIONIZED WATER, 1 GAL BOTTLE	-DISTILLED-DEIONIZED	ASTM D 1193	81346	GL	3	0	REV 7351	6810006826867
DOPE	-1 GAL CN	MILD5549A	81349	GL	3	6	REV 8035	8010002234037
DOPE	-1 PT CAN	MILD5553	81349	PT	3	6	REV 7271	8010002970574
DRY CLEANING SOL	-	A-A-711 TY2	58536	OZ	3	0	55 GALLON DRUM	6850002858011
DRY CLEANING SOL	-	A-A-711 TY2	58536	PT	3	0	55 GALLON DRUM	6850002858011
DRY CLEANING SOL	-	A-A-711 TY2	58536	GL	1	0	55 GALLON DRUM	6850002858011
DRY CLEANING SOL	-TYPE 1, 5 GL CAN	P-D-680	81348	GL	3	0	REV 7253	6850002649038

Downloaded from http://www.everyspec.com

CONSUMABLE ITEMS PART 2

NOMENCLATURE		P/N	FSCM	UM	EC	SL	ADDITIONAL INFO	NSN
DRY CLEANING SOLVEN DRUM	-P-D-680 TY 1,55 GL	P-D-680	81348	GL	3	0	REV 7240	6850002858012
DRY CLEANING SOLVEN CAN	-P-D-680 TY 2,5 GL	P-D-680	81348	GL	3	0	REV 7240	6850002745421
DRY CLEANING SOLVEN	-TYPE 2, 1 PTCAN	PD680	81348	PT	3	0	REV 7254	6850001104498
DUMMYCONNECTOR,PLU-		3193631	10001	EA	1	0	REV 6232	5935003529077
DUMMY CONNECTOR,PLU-EACH		1080	95760	EA	3	0	REV 7224	5935003529077
EDGING COMPOUND	-1 QT CAN	CORFIL 615/DTA	07452	QT	3	4	REV 7271	8030001490137
ELECTRODE, WELDING	-AMS5799 TYB, POUND	AMS5799 5/32	81343	LB	3	0	REV 6357, 7237	3439011028659
ENAMEL		MILE5556	81349	QT				
ENAMEL		MS35524-2	96906	QT	1	6	REV 6230	8010002970546
ENAMEL CAN	-CL 2, 16 OZ SPRAY	TT-E-001384	81348	PT	3	6	REV 7275	8010001594519
ENAMEL PT CAN	-MIL-E-22118 RED, 1	MIL-E-22118	81349	PT	3	6	REV 7238	8010008238046
ENAMEL COLOR 37038 BLK, 1 QT CAN	-TT-E-527 COMP L	TT-E-527	81348	QT	3	6	REV 7157	8010002970546
ENAMEL	-1 QT CAN	MIL-E-7729	81349	QT	3	6	REV 6357, 7237	8010002982302
EPOXY COATING KIT	-GRAY 1 QT KIT	E2833	16193	EA	3	4	REV 7275	8010008913112
EPOXY COATING KIT QT KIT	-LUSTERLESS BLACK 2	08-0988-005	98897	EA	3	6	REV 7275	8010001519979
EPOXY COATING KIT 37038, BLACK, 1 QT EPOXY & 1 QT ACTIVATOR	-MILC22750, TY1 COLOR	MIL-C-22750	81349	QT	3	4	REV 7162	8010010307254
EPOXY COATING KIT 37875 WHITE, 1 GL KIT	-MIL-C-22750, TY1, COLOR	MIL-C-22750	81349	GL	1	4	REV 7232	8010010131039
EPOXY COATING KIT QT KIT	-TY 1 GRAY #36231, 1	MIL-C-22750	81349	QT	3	4	1 QT KIT TM 55-1500-345 -23	8010010823060
EPOXY COATING KIT	-2 QT KIT	080988-005	98897	QT	3	6	2 QT KIT CONSUMABLE FOR TM 55-1520-210-23-1	8010001519979

Downloaded from http://www.everyspec.com

CONSUMABLE ITEMS PART 2

NOMENCLATURE		P/N	FSCM	UM	EC	SL	ADDITIONAL INFO	NSN
EPOXY PRIMER COATING TM 55-1520-210-23-1	-TYPE 1, 8 OZ KIT	MIL-P-23377	81349	OZ	3	4	8 OZ KIT CONSUMABLE FOR	8010002294813
EPOXY RESIN	-1 GAL CAN	EPON826	86961	GL	3	4	REV 7274	8030001449658 ,
EPOXY, PRIMER COAT PT PART B KIT	-1 QT PART A AND 1/2	MIL-P-53022	81349	QT	3	4		
ERASER, RUBBER AND STYLE C, 12 EA PER BOX	-TYPE 3 AND CLASS 2	ZZ-E-00661	81348	EA	3	0	REV 7257	7510006197714
ERASER, RUBBER OR STYLE B, 12 EA PER BOX	-TYPE 7 AND STYLE A	ZZ-E-00661	81348	EA	3	0	REV 7257	7510003238788
ERASER, RUBBER	-12 EA PER BOX	A-A-132	58536	EA	3	0	REV 6357, 7254	7510002237044
ERASER, RUBBER	-12 EA PER BOX	1954	80988	EA	3	0	REV 7257	7510009495055
ETCHING SOLUTION	-2 OZ CAN	TETRAETCH20ZBT	17217	OZ	3	F	REV 7275	6850004318662
ETHYL ACETATE, TECHN	-5 GAL CAN	TTE751	81348	GL	3	5	REV 7271	6810002456694
ETHYL ALCOHOL, ABSOL ABSOLUTE, 16 OZ BOTTLE	-ETHYL ALCOHOL	OC265	81348	OZ	3	0	REV 7240	6810002645906
ETHYL ALCOHOL, TECHN	-5 GALLON DRUM	O-E-00760	81348	GL	3	0	REV 7162	6810008238003
ETHYLENE GLYCOL MON	-1 GAL CAN	MILE7125	81349	GL	3	0	1 GAL CAN TM 55-1500-345-23	6810002630563
ETHYLENE GLYCOL MON	-1 GL CAN	TTE776	81348	GL	3	0	REV 7233	6810002812001
ETHYLENE GLYCOL MON	-16 OZ BOTTLE	OE780	81348	OZ	3	0	16 OZ BT CONSUMABLE FOR TM 55-1520-210-23-1	6810002648997
ETHYLENE PROPYLENE	-	HMS16-1086	02731	SF	3	1	REV 7253	6810011884522
ETHYLENE PROPYLENE	-SQUARE FOOT	1320	07013	SF	1	1	REV 7232	6810011884522
FABRIC, NYLON	-1000 FT ROLL	240323	76541	FT	1	0	REV 7272	
FASTENER TAPE, HOOK CLASS 1,2 IN WIDE, BLACK, YARD	-MILF21840 TYPE 2 AND	23B28035-5	70167	YD	3	0	REV 7239	8315009264931
FASTENER TAPE, PILE AND 2 IN WIDE, YARD	-MILE21840 CLASS 1	MILE21840	81349	YD	3	0	REV 7240	8315009264930
FIBERBOARD, CORRUGAT CLASS DOMESTIC, VARIETY, 57 X 33 5 IN, 25 SH	-TYPE CF, GRADE 200,	PPP-F-320	81348	SH	3	0	REV 7271	8135009525418

Downloaded from http://www.everyspec.com

CONSUMABLE ITEMS PART 2

NOMENCLATURE		P/N	FSCM	UM	EC	SL	ADDITIONAL INFO	NSN
FIBERBOARD,CORRUGAT 250 FT L ROLL	-TYPE 1, 12 IN W X	PPPP291	81348	FT	3	0	REV 7271	8135007823954
FLUX, BRAZING	-TYPE A, 8 OZ JAR	OF498	81348	OZ	3	0	REV 7275	3439009134750
FLUX, SOLDERING B, 1 QT CAN	-O-F-506 TYPE 1, FORM	O-F-506	81348	QT	3	0	REV 7161	3439010699176
FLUX, SOLDERING	-2 OUNCE CAN	O-F-506	81348	OZ	3	0	REV 7198	3439002554571
FOAM LIQUID, FIRE EX EXT 5 GAL CAN	-FOAM LIQUID, FIRE	MIL-F-24385	81349	GL	3	0	REV 7280	4210010568343
FOG OIL	-TY SGF-2 55 GAL DRLM	MILF12070	81349	GL	3	4	REV 7280	9150002617895
FOIL METAL WIDE	-75 FT ROLL 12 IN ABLE FOR TM 55-1500-204-25/1	A-A-1676	58536	FT	3	0	75 FT RO 12 IN WIDE CONSUM-	8135008229433
FUSIBLE WEB WT, 200 YD RL	-POLYAMIDE, 40 IN	SL-5	15674	YD	3	0	REV 7272	8040011462656
GASKET	JM89-3-64	92798		YD	3	0	YD	5330009381719
GASKET MATERIAL	5008	08711		EA	1	0	REV 7233	5330012164267
GASKETING, MATERIAL	25-1316-0002	57003		FT	1	0		
GLOVE, PATIENT EXAMI	-100 PER BOX	MILG36592	81349	EA	3	0	REV 7156	6515004620832
GLOVES, MEN'S	-COTTON, WHITE, MED, TY1	MIL-G-3866	81349	PR	3	0	REV 8034	8415002688353
GLYCEROL, TECHNICAL	-1 GAL CAN	OG491	81348	GL	3	0	REV 7271	6810002646548
GRAIN ABRASIVE	-	MILG5634	81349	LB	3	0	REPLACES H2H701CNEM	
GRAIN, ABRASIVE SHELL, MIL-G-5634, TY 3, 50 LB BAG	-BLACK WALNUT	A-A-1722	58536	LB	3	0	REV 7275	5350000501094
GRAPHITE, DRY	-1 LB CAN	SSG659	81348	LB	3	0	REV 7271	9620002336712
GREASE, AIRCRAFT	-	AEROSHELLGREASF2	54527	LB	1	6	REV 6235	9150001450268
GREASE, AIRCRAFT		MOBILGREASE28	77988	LB	1	6	REV 6235	9150001450268
GREASE, AIRCRAFT		MOBIL28	77988	CN				

Downloaded from http://www.everyspec.com

CONSUMABLE ITEMS PART 2 -

NOMENCLATURE		P/N	FSCM	UM	EC	SL	ADDITIONAL INFO	NSN
GREASE, AIRCRAFT	-	PED30-40	81230	CN				
GREASE, AIRCRAFT	-	PENOLAANDOC C	81230	CN				
GREASE, AIRCRAFT	-	ROYCO22S	07950	CN				
GREASE, AIRCRAFT	-	2	54527	CN				
GREASE, AIRCRAFT	-	MIL-G-4343	81349	LB	3	6	1 750 LB CAN	9150002698255
GREASE, AIRCRAFT	-	COSMOLUBE615	73277	LB				
GREASE, AIRCRAFT	-	ROYCO43	07950	LB				
GREASE, AIRCRAFT	-	TEMPLUBE124	76641	LB				
GREASE, AIRCRAFT	-	8643130	19200	LB	1	6	REV 6230	9150002698255
GREASE, AIRCRAFT	-	COSMOLUBE615	73277	LB				
GREASE, AIRCRAFT	-	ROYCO43	07950	LB				
GREASE, AIRCRAFT	-	TEMPLUBE124	76641	LB				
GREASE, AIRCRAFT	-	8643130	19200	LB	1	6	REV 6230	9150002698255
GREASE, AIRCRAFT RESISTIVE, 1.75 LB CAN	-CORROSION	MIL-G-25537	81349	LB	3	6	REV 7240	9150006169020
GREASE, AIRCRAFT	-1 POUND CAN	MIL-G-81322	81349	LB	3	6	REV 7240	9150009448953
GREASE, AIRCRAFT	-1 75 LB CAN	MIL-G-81827	81349	LB	3	7	REV 7240	9150004089635
GREASE, AIRCRAFT	-14 OZ CARTRIDGE	MIL-G-25537	81349	EA	3	6	REV 8034	9150004780055
GREASE, AIRCRAFT	-2 OZ TUBE	MIL-G-4343	81349	OZ	3	6	REV 7237	9150001199291
GREASE, AIRCRAFT	-5 LB CAN	MIL-G-81322	81349	LB	3	6	REV 757	9150001450268
GREASE, AIRCRAFTAND RESISTIVE, 35 LB CAN	-CORROSIVE	MIL-G-23827	81349	LB	3	6	REV 7240	9150009857248
GREASE, AIRCRAFTAND RESISTIVE, 6 5 LB CAN	-CORROSIVE	MIL-G-23827	81349	LB	3	6	REV 7240	9150009857247

Downloaded from http://www.everyspec.com

CONSUMABLE ITEMS PART 2

NOMENCLATURE		P/N	FSCM	UM	EC	SL	ADDITIONAL INFO	NSN
GREASE, AIRCRAFT AND 8 OZ TUBE	-MIL-G-46886 TYPE 1,	MIL-G-46886	81349	OZ	3	7	REV 7243	9150001450161
GREASE, AIRCRAFT AND 11, 8 OZ TUBE	-MIL-6-46886 TYPE	MIL-G-46886	81349	OZ	3	7	REV 7243	9150005844299
GREASE, AIRCRAFT AND	-1 75 LB CAN	MIL-G-23827	81349	LB	3	6	REV 6223 REV 7233	9150009857246
GREASE, AIRCRAFT AND	-80Z TUBE	MIL-G-23827	81349	OZ	3	6	REV 6233 REV 7237	9150009857245
GREASE, ARRESTING GE	-120 LB DRUM	MOBILGREASE 28	77988	LB	3	0	REV 7273	9150012377468
GREASE, BALL & ROL	-8 OZ TUBE	MILG25013	81349	EA	3	6	REV 8035	
GREASE, BALL AND ROL	-3 OZ TUBE	MOLYKOTE FS3451 2 GREASE	71984	OZ	3	6	3 OZ TUBE CONSUMABLE FOR TM 55-1520-210-23-1	9150010401423
GREASE, BALL AND ROL	-5 LB CAN	MIL-G-18709	81349	LB	3	7	REV 7273	9150001491593
GREASE, GENERAL PUMP	-1 LB CAN	AEROLUBRIPLATE	73219	LB	3	0	REV 7275	9150000686268
GREASE, GENERAL PURP	-	630AA	73219	LB	3	6	5 LB CAN	9150006631770
GREASE, GENERAL PURP	-1 75 LB CAN	MIL-G-24139	81349	OZ	3	6	REV 8035	9150001806381
GREASE, GENERAL PURP	-14 OUNCE TUBE	930AA	73219	OZ	3	0	REV 7161	9150009531694
GREASE, GENERAL PURP	-14 OZ CART, CORROSION, PRESSURE, OXIDATION, SALT WATER AND WEAR	LUBRIPLATE630-2	73219	OZ	3	6	REV 7275	9150009297946
GREASE, GENERAL PURP	-14 OZ CARTRIDGE	PLASTILUBEMOLY3	02307	OZ	3	7	REV 7157	9150001414481
GREASE, GENERAL PURP	-14 OZ CARTRIDGE	PLASTILUBEMOLY3	02307	OZ	3	7	14 OZ CARTRIDGE CONSUM-ABLE FOR TM 55-1520-210-23-1	9150001414481
GREASE, GENERAL PURP	-14 OZ CARTRIDGE	MOLYLUBE 503	12474	OZ	3	7	REV 7280	9150001414481
GREASE, INSTRUMENT	-4 OZ TUBE	MIL-G-81937	81349	OZ	3	6	REV 7257	
GREASE, MOLYBDENUM	-	AEROSHELL17	54527	LB				
GREASE, MOLYBDENUM	-	AEROSHELL17-1LB	54527	LB				
GREASE, MOLYBDENUM	-	BRAYCOTE687-1LB	98308	LB				
GREASE, MOLYBDENUM		CALOL4056	81230	LB				

Downloaded from http://www.everyspec.com

CONSUMABLE ITEMS PART 2

NOMENCLATURE		P/N	FSCM	UM	EC	SL	ADDITIONAL INFO	NSN
GREASE, MOLYBDENUM	-	DTD5527	K0249	LB				
GREASE, MOLYBDENUM	-	ELECTROMOLY11	85932	LB				
GREASE, MOLYBDENUM	-	ROYC064C	07950	LB				
GREASE,MOLYBDENUM D	-	MILG7187 1 LB CAN	81349	LB	1	6	REV 6231	9150007542595
GREASE,MOLYBDENUM D	-	MOLITHN02MOLY	73219	LB	1	6	REV 6231	9150007542595
GREASE,MOLYBDENUM D	-	4L210	81755	LB	1	6	REV 6231	9150007542595
GREASE,MOLYBDENUM D	-1 750 LB CAN	MIL-G-21164	81349	LB	3	6	REV 7223	9150007542595
GREASE,MOLYBDENUM D	-15 LB CAN	MOLYKOTE M-77	94499	OZ	3	6	REV 6357 REV 7237	9150000761582
GREASE, PLUG VALVE	-SILICONE, 8 OZ, TUBE	8490010	18876	EA	3	7	REV 7275	9150006169212
GREASE, RIFLE	-GELLING AGENT AND MINERAL OIL, CORROSION AND WATER RESISTANT, 5	MIL-G-46003	81349	LB	3	7	REV 7275	9150000578976
GREASE, SILICONE INS	-8 OZTUBE	MILL15719	81349	OZ	3	6	REV 7233	9150002575358
GREASE, TRANSMISSION	-5 LB CAN	HMS20-1155	02731	LB	1	0	REV 7232	9150012121409
GTCP36-55H	-	3800102-2	70210	EA	1	0	APU FOR AH-64	
HELIUM, EXTRA HIGH	-213 CU FT CYL	EXTRA HIGH PURITY HELIUM	90808	CF	3	0	REV 7223	6830000017989
HELIUM, TECHNICAL	-217 CU FT CYL	BB-H-1168	81348	CF	1	0	REV7229	6830006600027
HYDRAULIC FLUID	-	BRAYCO756C	98308	QT				
HYDRAULIC FLUID	-	BRAYCO756D	98308	QT				
HYDRAULIC FLUID	-	BRAYCO757B	98308	QT				
HYDRAULIC FLUID	-	CASTROLHYSPINA	07950	QT				
HYDRAULIC FLUID	-	DS437	07950	QT				
HYDRAULIC FLUID	-	FP221	33870	QT				
HYDRAULIC FLUID	-	MOBILAEROHFB	92895	QT				

Downloaded from http://www.everyspec.com

CONSUMABLE ITEMS PART 2

NOMENCLATURE		P/N	FSCM	UM	EC	SL	ADDITIONAL INFO	NSN
HYDRAULIC FLUID	-	PED3337	81230	QT				
HYDRAULIC FLUID	-	PED3565	81230	QT				
HYDRAULIC FLUID	-	PETROFLUID4607	86459	QT				
HYDRAULIC FLUID	-	PETROFLUID5606B	86459	QT				
HYDRAULIC FLUID	-	PQHYDRAULICFLUID4226	92895	QT				
HYDRAULIC FLUID	-	ROYCO756CC7304	07950	QT				
HYDRAULIC FLUID	-	ROYCO756D	07950	QT				
HYDRAULIC FLUID	-	STAUFFERAEROHYDROIL500	97854	QT				
HYDRAULIC FLUID	-	TL5874	59595	QT				
HYDRAULIC FLUID	-	UNIVISJ41	29700	QT				
HYDRAULIC FLUID	-	XSL7828	54527	QT				
HYDRAULIC FLUID	-	YT283	33870	QT				
HYDRAULIC FLUID, AUT	-1 QT CAN	DEXRON II	24617	OZ	3	7	REV 7362	9150006982382
HYDRAULIC FLUID, FIR	-1 GL CAN	MIL-H-83282	81349	GL	3	6	REV 7240	9150001497432
HYDRAULIC FLUID, FIR	-1 QUARTCAN	MIL-H-83282	81349	QT	3	6	REV 7161	9150001497431
HYDRAULIC FLUID, FIR	-55 GAL DRUM	MIL-H-83282	81349	GL	3	6		9150001806290
HYDRAULIC FLUID, PET SYMBOL, 55 GAL DRUM	-MILITARY2135-T-H	MIL-L-17672	81349	GL	3	7	REV 7271	9150005842560
HYDRAULIC FLUID, PET	-RED, 1 QT CAN	MIL-H-5606	81349	QT	3	6	REV 7275	9150002526383
HYDRAULIC FLUID, PET	-1 GL CAN	MIL-H-5606	81349	GL	3	6	REV 7240	9150002234134
		DELETED						
HYDRAULIC FLUID, PET	-1 QTCAN	MIL-H-5606	81349	QT	3	6	REV 7157	9150002526383
		DELETED						

Downloaded from http://www.everyspec.com

CONSUMABLE ITEMS PART 2

NOMENCLATURE		P/N	FSCM	UM	EC	SL	ADDITIONAL INFO	NSN
HYDRAULIC FLUID	-	PED3337	81230	QT				
HYDRAULIC FLUID	-	PED3565	81230	QT				
HYDRAULIC FLUID	-	PETROFLUID4607	86459	QT				
HYDRAULIC FLUID	-	PETROFLUID5606B	86459	QT				
HYDRAULIC FLUID	-	PQHYDRAULICFLUID4226	92895	QT				
HYDRAULIC FLUID	-	ROYCO756CC7304	07950	QT				
HYDRAULIC FLUID	-	ROYCO756D	07950	QT				
HYDRAULIC FLUID	-	STAUFFERAEROHYDROIL500	97854	QT				
HYDRAULIC FLUID	-	TL5874	59595	QT				
HYDRAULIC FLUID	-	UNIVISJ41	29700	QT				
HYDRAULIC FLUID	-	XSL7828	54527	QT				
HYDRAULIC FLUID	-	YT283	33870	QT				
HYDRAULIC FLUID, AUT	-1 QT CAN	DEXRON II	24617	OZ	3	7	REV 7362	9150006982382
HYDRAULIC FLUID, FIR	-1 GL CAN	MIL-H-83282	81349	GL	3	6	REV 7240	9150001497432
HYDRAULIC FLUID, FIR	-1 QUARTCAN	MIL-H-83282	81349	QT	3	6	REV 7161	9150001497431
HYDRAULIC FLUID, FIR	-55 GAL DRUM	MIL-H-83282	81349	GL	3	6		9150001806290
HYDRAULIC FLUID, PET SYMBOL, 55 GAL DRUM	-MILITARY2135-T-H	MIL-L-17672	81349	GL	3	7	REV 7271	9150005842560
HYDRAULIC FLUID, PET	-RED, 1 QT CAN	MIL-H-5606	81349	QT	3	6	REV 7275	9150002526383
HYDRAULIC FLUID, PET	-1 GL CAN	MIL-H-5606	81349	GL	3	6	REV 7240	9150002234134
		DELETED						
HYDRAULIC FLUID, PET	-1 QTCAN	MIL-H-5606	81349	QT	3	6	REV 7157	9150002526383
		DELETED						

Downloaded from http://www.everyspec.com

CONSUMABLE ITEMS PART 2

NOMENCLATURE	PIN	FSCM	UM	EC	SL	ADDITIONAL INFO	NSN
INSPECTION PENETRAN -GROUP 3,30 LB DRUM	MIL-I-25135	81349	LB	3	6	30 LB DR CONSUMABLE FOR TM 55-1520-210-23-1	6850007822725
INSPECTION PENETRAN -MIL-I-25135 GROUP VII, KIT, 3 CAN OF 12 OZ REMOVER AND	MIL-I-25135	81349	EA	3	6	REV 7243	6850007822740
INSPECTION PENETRAN -1 GL CAN	ZL22A	37676	GL	3	0	REV 7223	6850005856425
INSULATING COMPOUND -	683-3-3	98502	PT	1	H	REV 6231	5970001810190
INSULATING COMPOUND -	120-OPAQUE WHITE	05820	OZ	3	0	REV 7218	5970011003881
INSULATING COMPOUND -	14556	10138	OZ	1	0	REV 6231	5970011003881
INSULATING COMPOUND -	C101061155	88818	KT		F		5970010297961
INSULATING COMPOUND -	034-000765	26916	KT				
INSULATING COMPOUND -	1831	99109	KT				
INSULATING COMPOUND -MIL-1-46058 TY UR, 1 PINT KIT	MIL-1-46058	81349	PT	3	H	REV 7198	5970001810190
INSULATING COMPOUND -MIL-I-46058 TYPE XY, 1 POUND CAN	MIL-1-46058	81349	LB	3	6	REV 7219	5970011447333
INSULATING COMPOUND -MOISTURE AND OIL RESISTANT PASTE NONCORROSIVE, 2 8 OZ TUBE	RTV108-2 8OZ	01139	OZ	3	H	REV 7243	5970001345951
INSULATING COMPOUND -1 LB CAN	3140 RTV LB	71984	LB	3	F	REV 7257	5970001108234
INSULATING COMPOUND -3 OZ TUBE	3140 RTV	94499	OZ	3	F	REV 7257	5970007913716
INSULATING VARNI -COMPOSITION 2, 5 GL CAN	MILV173	81349	GL	3	6	REV 7257	5970002850269
INSULATING VARNISH, -TYPE 2 AND AAMEND 2, 1 GL CAN	MILV173	81349	GL	3	7	REV 7257	5970002850271
INSULATING VARNISH, -1 QT CAN	1A27	99109	QT	3	H	REV 7257	5970009953652
INSULATING VARNISH, -1 QT CAN	1202-QT	08800	OZ	3	7	REV 7280	5970002962129
INSULATING VARNISH, -12 OZ AEROSOL CAN	1B15H	99109	OZ	3	H	REV 7257	5970009904924

Downloaded from http://www.everyspec.com

CONSUMABLE ITEMS PART 2

NOMENCLATURE		P/N	FSCM	UM	EC	SL	ADDITIONAL INFO	NSN
INSULATION COMPOUND	-	MIL-I-46058 TYAR	81349	LB	3	F	REV 8034	5970010297961
INSULATION SHEET AND 3FT LONG AND 015 IN THICKNESS, SHEET	-MIL-P-15037 36 IN WIDE	MIL-P-15037	81349	SH	3	0	REV 7239	5970001188838
INSULATION SHEET, EL	GRADE B & TYPE 1	MILP22241	81349	SH	3	0	36 IN WIDE X 1 5 FT LONG X 0125 IN THICK	5970000638526
INSULATION SLEEVING THICKNESS 030- 040, ID .500-1 000, WHITE	-CLASS 1, WALL	M23053/5-110-9	81349	IN	3	0	REV 7273	5970008222775
INSULATION SLEEVING	-FOOT	M81786/10-4	81349	FT	3	0	REV 7224	5970010387449
INSULATION SLEEVING 1 CORROSION AND FLAME RESISTANT	-MIL-I-23053/1 CLASS	M23053/1-101-0	81349	FT	3	0	REV 7240	5970000631500
INSULATION SLEEVING 1, BLACK, WALL THICKNESS .016, ID .040- 049	-TY 1, CLASS	B7444-3-1-18B	81349	FT	3	0	REV 7273	5970008818200
INSULATION SLEEVING WALL THICKNESS 017-.023, ID 204-.224	-TY 1, CLASS 1, CLEAR,	B7444-1-1-4C	81349	FT	3	0	REV 7273	5970008920966
INSULATION SLEEVING 022-.028, ID .0250.500, CLASS 1, BLACK	-WALL THICKNESS	M23053/5108-0	81349	IN	3	0	REV 7273	5970008122967
ISOPROPYL ALCOHOL, I	T GRADE A, 1 GL CAN	TT1735	81348	GL	3	0	REV 7254	6810002865435
SOPROPYL ALCOHOL,	T GRADE A, 8 OZ CAN	TT1735	81348	OZ	3	0	REV 7254	
ISOPROPYL ALCOHOL,	T -GRADE A,32 OZ CAN	TT1735	81348	EA	3	0	REV 7254	6810009838551
ISOPROPYL ALCOHOL, T -REV 7211		TT1735	81348	GL	3	0	6810008556160	
KEROSINE		VVK211	81348	GL	3	0	REV 7239	9140002426748
KEROSINE CAN	-KEROSENE 1 GALLON	VV-K-211	81348	GL	1	0	REV 7229	9140002426748
KIT, AIRCRAFT CLEANI	-1 KIT	251M	27293	EA	3	0	REV 6357, 7254	7920004906046
LACQEUR PINT SPRAY CAN	-TYPE 2, OLIVE DRAB, 1	MIL-L-46159	81349	QT	3	0	REV 7273	

Downloaded from http://www.everyspec.com

CONSUMABLE ITEMS PART 2

NOMENCLATURE		P/N	FSCM	UM	EC	SL	ADDITIONAL INFO	NSN
LACQUER		A-A-665	58536	OZ	3	6	16 OZ AEROSOL CAN	8010005152487
LACQUER	-ACFT GREEN, 1 GLCAN	MIL-L-46159	81349	GL	3	6	REV 8034	8010010338917
LACQUER #17038, 1 GAL CAN	-BLACK COLOR	A-A-1452	58536	GL	3	6	REV 7271	8010002906158
LACQUER CAN	-BLACK #37038, 1 GAL	MIL-L-19538	81349	GL	3	6	1 GAL CAN TM 55-1500-345-23	8010005272884
LACQUER LUSTERLESS, 1 PT AEROSOL CAN	-BLACK COLOR #37038	A-A-6654	58536	PT	3	6	REV 7271	8010005825382
LACQUER 1 PT SPRAY CAN	-BLACK, COLOR 37038,	A-A-665	58536	PT	3	6	REV 7273	8010005825382
LACQUER 1 GL CAN	-BLACK, COLOR 37038,	TT-L-20	81348	GL	3	6	REV 7273	8010006647651
LACQUER CAN	-COLOR CLEAR, 1 GL.	MIL-L-19537	81349	GL	3	6	REV 7273	8010005271507
LACQUER CAN	-GRAY #36231,1 GAL	TT-L-20	81348	GL	3	6	1 GAL CAN TM 55-1500-345-23	8010005151568
LACQUER QT CAN	-MIL-L-19537 RED, 1	MIL-L-19537	81349	QT	3	6	REV 7239	8010005517934
LACQUER WHITE, COLOR 17875, COMPOSITION L	-MIL-L-81352	MIL-L-81352	81349	GL	3	6	REV 7238	8010009356608
LACQUER	-MIL-L-81352 GRAY	MIL-L-81352	81349	GL	3	6	1 GL CAN	8010009357066
LACQUER	-OLIVE DRAB, 1 QTCAN	MIL-L-46159	81349	QT	3	0	REV 7275	8010012111107
LACQUER AEROSOL CAN	-RED #11136, 16 OZ	MILL81352	81349	PT	3	6	REV 7275	
LACQUER LUSTERLESS, 1 QT CAN	-RED COLOR #31136	TT-L-20	81348	QT	3	6	REV 7271	8010005151568
LACQUER CAN	-TY 1 BLACK, 1 GAL	MIL-L-46159	81349	GL	3	6	1 GAL CAN TM 55-1500-345-23	8010010429438

Downloaded from http://www.everyspec.com

CONSUMABLE ITEMS PART 2

NOMENCLATURE		P/N	FSCM	UM	EC	SL	ADDITIONAL INFO	NSN
LACQUER #17178, 12 OZ PASTE AND CLEAR TO MK 1 GL	-TY 2 ALUMINUM COLOR	TT-L-32	81348	GL	3	6	12 OZ PASTE AND CLEAR LA CQUER TO MAKE 1 GAL TM 55-1500-345-23	8010002418406
LACQUER AEROSOL CAN	-WHITE #17875,16 OZ	MILL81352	81349	PT	3	6	REV 7275	
LACQUER	-1 QT CAN	MIL-L-19538	81349	QT	3	6	REV 8034	8010000822479
LAPPING AND GRINDING -		LAP5-0001-000-003	99189	GL	1	0		5350012692244
LAPPING AND GRINDING GRIT 400 METAL WORKING, 40Z JAR ABRAV MAT ALUMINUM OXIDE		15-0002	26477	OZ	3	0	REV 7280	5350001516111
LAPPING AND GRINDING -1 LB CAN		1800	99189	LB	3	0	1 LB CN CONSUMABLE FOR TM 55-1520-238-23	5350001515600
LAPPING AND GRINDING -280 GRIT ALUMINUM OXIDE OR SILICON CARBIDE, 1 LB CAN		A-A-1203	58536	LB	3	0	REV 7271	5350005792513
LAPPING AND GRINDING 400 GRIT ALUMINUM OXIDE & SIUCON CARBIDE, 1 LB CAN		A-A-1203	58536	LB	3	0	1 LB CN CONSUMABLE FOR TM 55-1520-210-23-1	5350001931348
LACQUER 24087, 5 GALLON CAN	-SEMI-GLOSS, GREEN,	MIL-L-46159	81349	GL	3	6	REV 7273	
LAYOUT DYE	-COLOR, BLUE	871173	19203	PT	1	0	REV 6231	6850006649067
LAYOUT DYE	-1 PT CAN	MIL-L-83795	81349	OZ	3	0	1 PT CN CONSUMABLE FOR TM 55-1520-210-23-1	6850006649067
LAYOUT DYE	-1 PT CAN	871173	19203	OZ	3	0	REV 7275	6850006649067
LEAD SHOT	-1 WESTERN SHOT	10511620	19200	LB	3	0	REV 7280	9650003126640
LEAK DETECTION FLUI	-	838595	19203	OZ	3	0	REV 6232	6850009354068
LEAK DETECTION FLUI	-REV 7237	838595	19203	OZ	3	0		6850009354068
LEAK DETECTION FLUI 121 BOTTLES PER BOX	4 OZ PER BOTTLE,	372	03530	OZ	3	0	REV 7243	6850009354068
LEAK TEST COMPOUND OUNCE BOTTLE	-MIL-L-25567 TY2, 4	MIL-L-25567	81349	OZ	3	0		6850006211819

Downloaded from http://www.everyspec.com

CONSUMABLE ITEMS PART 2

NOMENCLATURE		P/N	FSCM	UM	EC	SL	ADDITIONAL INFO	NSN
LEAK TEST COMPOUND	-TYPE 1,4 OZ BOTTLE	MIL-L-25567	81349	OZ	3	0	REV 7280	6850006211820
LINSEED OIL, BOILED	-	A-A-371	58536	GL	3	7	REV 6357	8010006848789
LINSEED OIL, BOILED	-1 GAL CAN	A-A-371	58536	GL	3	7	REV 7271	8010001523245
LUBRICANT	-6 OZ TUBE	3913-G1	53592	OZ	3	R	REV 7232	9150005068497
LUBRICANT	-6 OZ TUBE	204-040-755-5	97499	OZ	3	R	REV 7239	9150005068497
LUBRICANT, INNER TUB	-	443	79899	LB		0		2640002646642
LUBRICANT, INNER TUB	-10 POUND BOX	MIL-L-5024	81349	LB	3	0	REV 7161	2640002646642
LUBRICANT, SOLID GALLON CAN	-MIL-L-8937, FORM A, 1	MILL8937	81349	GL	3	H	REV 7156	9150009857255
LUBRICANT, SOLID FIL	-	DC 3402	71984	OZ	1	H	REV 6230	9150007540064
LUBRICANT, SOLID FIL	-	DC 3402 HEAT SINK COMPOUND	71984	OZ				
LUBRICANT, SOLID FIL	-	LUBRI-BOND220	85932	OZ	1	H	REV 6230	9150007540064
LUBRICANT, SOUD FIL	-	LUBRIBONDA	85932	OZ				
LUBRICANT, SOLID FIL	-	MOLYKOTE3402	94499	OZ				
LUBRICANT, SOLID FIL	-	00894-210	98897	OZ	1	H	REV 6230	9150007540064
LUBRICANT, SOLID FIL	-	4169931	96214	OZ	1	H	REV 6230	9150007540064
LUBRICANT, SOLID FIL	-	417564-1	96214	OZ	1	H	REV 6230	9150007540064
LUBRICANT, SOLID FIL	-	SPL 26A	34227	OZ	3	H	REV 6232	9150001682000
LUBRICANT, SOLID FIL	-FORM 1, 1 PT CAN	MIL-L-8937	81349	PT	3	H	REV 7273	9150008345608
LUBRICANT, SOLID FIL 12 OZ AEROSOL CAN	-MIL-L-23398 TY II,	MIL-L-23398	81349	OZ	3	H	REV 8034	9150007540064
LUBRICANT, SOUD FIL	-TYPE 1, 1 QT CAN	MIL-L-23398	81349	QT	3	H	REV 7280	9150009547422
LUBRICANT, SOLID FIL	-1 QT CAN	MILL46010	81349	QT	1	H	REV 7253	9150009486912

Downloaded from http://www.everyspec.com

CONSUMABLE ITEMS PART 2

NOMENCLATURE		P/N	FSCM	UM	EC	SL	ADDITIONAL INFO	NSN
LUBRICANT, SOLID FIL PRESSURIZED	-16 OZ CAN	MILL46147	81349	OZ	3	H	REV 7233	9150001682000
LUBRICANT, SOLID FIL MOLYLUBE 1200, 15 OZ CAN AEROSOL	-321R IS OBS BY	MOLYLUBE 1200	12474	OZ	3	K	REV7224	9150000801026
LUBRICANT, TIRE AND	-1 GAL CAN	MILL8362	81349	GL	3	0	REV 7271	2640002617458
LUBRICATING OIL	-	BRAYCO300	98308	OZ				
LUBRICATING OIL	-	COSMOLINE1116	73277	OZ				
LUBRICATING OIL	-	NOXRUST518CODER62-203-1	02847	OZ				
LUBRICATING OIL	-	PETROTECT800	86459	OZ				
LUBRICATING OIL	-	PQRUSTPREVENTIVEN01 72	92895	OZ				
LUBRICATING OIL	-	RUSTFOIL2675	84591	OZ				
LUBRICATING OIL	-	ROYCO308	07950	OZ				
LUBRICATING OIL	-	TECTYL800	72527	OZ				
LUBRICATING OIL	-	TECTYL893	72527	OZ				
LUBRICATING OIL	-	AEROSHELLTURBINEOIL500	54527	QT				
LUBRICATING OIL	-	AEROSHELLTURBINEOIL550	97854	QT				
LUBRICATING OIL	-	AVREXSTURBO260	77988	QT				
LUBRICATING OIL	-	AVREXSTURBO265	77988	QT				
LUBRICATING OIL	-	BRAYCO899	98308	QT				
LUBRICATING OIL	-	BRAYCO899G	98308	QT				
LUBRICATING OIL	-	BRAYCO899S	98308	QT				
LUBRICATING OIL	-	CASTROL205	07950	QT				
LUBRICATING OIL	-	CHEVRONJETENGINEOIL5	81230	QT				
LUBRICATING OIL	-	CHEVRONJETENGINEOIL5	87510	QT				
LUBRICATING OIL	-	PQTURBINELUBRICANT5247	92895	QT				

Downloaded from http://www.everyspec.com

CONSUMABLE ITEMS PART 2

NOMENCLATURE		P/N	FSCM	UM	EC	SL	ADDITIONAL INFO	NSN
LUBRICATING OIL	-	PQTURBINELUBRICANT6423	92895	QT				
LUBRICATING OIL	-	PQTURBINELUBRICANT6700	92895	QT				
LUBRICATING OIL	-	PQTURBINELUBRICANT7731	92895	QT				
LUBRICATING OIL	-	PQTURBINELUBRICANT8878	92895	QT				
LUBRICATING OIL	-	PQTURBINELUBRICANT9595	92895	QT				
LUBRICATING OIL	-	RM139A	77988	QT				
LUBRICATING OIL	-	RM147A	77988	QT				
LUBRICATING OIL	-	ROYCO	07950	QT				
LUBRICATING OIL	-	ROYCO899C915	07950	QT				
LUBRICATING OIL	-	ROYCO899SC	07950	QT	1	7		
LUBRICATING OIL	-	SATO7377	59595	QT				
LUBRICATING OIL	-	SATO7730	59595	**QT**				
LUBRICATING OIL	-	SHELLAIRCRAFTTURBINEOIL55	154527	QT				
LUBRICATING OIL	-	STAUFFERJET11	07950	QT				
LUBRICATING OIL	-	STO21919	85239	QT				
LUBRICATING OIL	-	STO21919A	85239	QT				
LUBRICATING OIL	-	ST06530	85239	QT				
LUBRICATING OIL	-	TL8090	59595	OT				
LUBRICATING OIL	-	2380TURBOOILWS600	29700	QT				
LUBRICATING OIL	-	2392TURBODIL	29700	QT				
LUBRICATING OIL	-	2393TURBOOIL	29700	QT				
LUBRICATING OIL	-	2395	29700	QT				
LUBRICATING OIL	-	510	54527	QT				
LUBRICATING OIL	-	59	29700	QT				

Downloaded from http://www.everyspec.com

CONSUMABLE ITEMS PART 2

NOMENCLATURE		P/N	FSCM	UM	EC	SL	ADDITIONAL INFO	NSN
LUBRICATING OIL		6423	92895	QT				
LUBRICATING OIL	-GRADE 30, 1 QT CAN	MILL46152	81349	QT	3	6	VISCOSITY TEMP-9 60 MIN 210 DEG F & 12 90MAX210 DEG F	
LUBRICATING OIL	-GRADE 40, 1 QTCAN	MILL2104	81349	QT	3	7	REV 7280	
LUBRICATING OIL	-10-30W, 1 QT CAN	MILL46152	81349	QT	3	6	VISCOSITY-9 30 MIN 100 D EG C & 12 50 MAX 100 DEG C	
LUBRICATING OIL GAL DRUM	-10W-30W GRADE, 55	MILL46152	81349	GL	3	6	9 60 MIN 210 DEG F & 12 90 MAX 210 DEG F FLASH POINT 210 DEG F	
LUBRICATING OIL MOLYBDENUM DISULFIDE 1 LB CAN	-DOD-L-25681 LUB OIL	DOD-L-25681	81349	LB	1	6	REV 7232	9150005437220
LUBRICATING OIL,	-GRADE L,1 GAL CAN	MIL-L-6086	81349	GL	3	7	REV 7271	9150002659417
LUBRICATING OIL,	-GRADE 1010,1 QT CAN	MILL6081	81349	QT	3	7	REV 8036	9150002732388
LUBRICATING OIL,	-TYPE 3	MILL22851	81349	GL	3	7	55 GL DR CONSUMABLE FOR TM 55-1500-333-24	9150009652305
LUBRICATING OIL,	-1 QT CAN	MIL-L-7808	81349	QT	3	7	REV 7161	9150007822627
LUBRICATING OIL, 1, 5 GAL CAN	-10W GRADE AND TYPE	MIL-L-21260	81349	GL	3	6	REV 7271	9150001113199
LUBRICATING OIL,	-4 OZ CAN	MIL-L-7870	81349	OZ	3	7	REV 7271	9150005421430
LUBRICATING OIL, AIR DRUM	-GRADE 1010, 55 GAL	MILL6081	81349	GL	3	7	REV 7271	9150002316676
LUBRICATING OIL, AIR CORROSIVE RESISTIVE, 55 GL DRUM	-MIL-L-22851 TY II	MIL-L-22851	81349	GL	3	7	REV 7246	9150007534937
LUBRICATING OIL, AIR	-1 GL CAN	MIL-L-7808	81349	GL	3	7	REV 7237	9150002704057
LUBRICATING OIL, AIR	-1 QT CAN	MILL6081	81349	QT	3	7	REV 6224 REV 7218	9150002732388
LUBRICATING OIL, AIR	-1 QT CAN	MIL-L-23699	81349	QT	3	7	REV 8034	9150009857099
LUBRICATING OIL, AIR	-1 QT CAN	MIL-L-6082	81349	QT	3	0	REV 7271	9150010079134
LUBRICATING OIL, AIR	-1 QT CAN,	MILL23699	81349	QT	1	7	REV 6232, REV 7232	9150009857099
LUBRICATING OIL, AIR	-8 OZ CAN	MILL23699	81349	OZ	3	7	REV 8035	9150001806266

Downloaded from http://www.everyspec.com

CONSUMABLE ITEMS PART 2

NOMENCLATURE		P/N	FSCM	UM	EC	SL	ADDITIONAL INFO	NSN
LUBRICATING OIL, ENG	GRADE 30, 1 PT CAN	MIL-L-21260	81349	PT	3	6	REV 7274	9150001110201
LUBRICATING OIL, ENG	GRADE 30, 5 GAL CAN	MIL-L-2104	81349	GL	3	6	REV 7271	9150001889858
LUBRICATING OIL, ENG DRUM	GRADE 30,55 GAL	MILL46152	81349	GL	3	6	VISCOSITY-9 60 MIN 210 DEG F & 12 90 MAX 210 DEF F	9150001866696
LUBRICATING OIL, ENG DRUM	-GRADE 30W, 55 GAL	MIL-L-2104	81349	GL	3	6	VISCOSITY-9 30 MIN 100 DEG C & 12 50 MAX 100 DEG C	9150001889858
LUBRICATING OIL, ENG 1 QT CAN	-MILL2104 30 GRADE,	MIL-L-2104	81349	QT	3	6	REV 7233	9150001866681
LUBRICATING OIL, ENG DRUM	-10W GRADE, 55 GAL	MILL2104	81349	GL	3	6	VISCOSITY-5 70 MIN 210 DEG F & 7 50 MAX 210 DEG F	9150001912772
LUBRICATING OIL, ENG	-10W GRADE, 1 QT CAN	MIL-L-2104	81349	QT	3	6	VISCOSITY-5 60 MIN 100 DEG C & 7.40 MAX 100 DEG C	9150001889858
LUBRICATING OIL, ENG & 16.80 MAX 210 DEG F	-12 90 MIN 210 DEG F	MILL2104	81349	QT	3	7	REV 7272	9150001896730
LUBRICATING OIL,GEA CAN	GRADE 80W-90, 1 QT	MIL-L-2105	81349	QT	3	6	REV 7274	9150010355392
LUBRICATING OIL, GEA	-250 GRADE, 1 GAL CAN	W-L-765	81348	GL	3	7	1 GL CN CONSUMABLE FOR TM 55-1520-210-23-1	9150002920097
LUBRICATING OIL, GEN	-1 QT CAN	WL800	81348	QT	3	6	REV 6357, 7257	9150002316689
LUBRICATING OIL, GEN	-1 OT CAN	MILL7870	81349	QT	3	7	VISCOSITY TEMP-10 00 MIN 100 DEG F & 4000 MAX -40 DEG F	9150002633490
LUBRICATING OIL, GEN	-16 OZ AEROSOL CAN	W-L-800	81348	QT	3	6	REV 6357, 7257	9150004580075
LUBRICATING OIL, GEN	4 OZ CAN	W-L-800	81348	OZ	1	6	REV 7156	9150002732389
LUBRICATING OIL, GEN	-5 GL CAN	WL800	81348	GL	3	6	REV 6357, 7257	9150002319062
LUBRICATING OIL, INS CAN	-INSTRUMENT OIL, 1 QT	MIL-L-6085	81349	QT	3	6	REV 7274	9150002234129
LUBRICATING OIL, MIN POWDER	-TYPE 1, 5 GL CAN	W-L-1071	81348	GL	3	7	REV 7253	9150002402260
LUBRICATING OIL, REF	-TYPE 2	W-L-825	81348	GL	3	7	1 GL CN CONSUMABLE FOR TM 55-1500-204-25/1	9150002929657

Downloaded from http://www.everyspec.com

CONSUMABLE ITEMS PART 2

NOMENCLATURE		P/N	FSCM	UM	EC	SL	ADDITIONAL INFO	NSN
LUBRICATING OIL, REF	-WL825 TYPE 3	VV-L-825	81348	QT	3	7	1 QT CAN	9150005982911
MAINTENANCE KIT, WIN TM 55-1500-343-23 POLISH KIT GLASS	-CONSUMABLE FOR	MILM58091 ?	81349	EA	3	0		1560004503622
MARKER, IDENTIFICATI ROLL	-1 IN WIDE AND 50 YD	MIL-T-9906	81349	FT	3	0	REV 6302, 7223, 7253	7690003684661
MARKER, TUBE TYPE	-	GGM00114	81348	DZ	3	0	EACH	7520002302734
MARKER, TUBE TYPE	-COLOR BLACK, 1 DOZ	GG-M-00114	81348	EA	3	0	REV 7280	7520009731059
MARKER, TUBE TYPE DOZEN PER BOX	-COLOR ORANGE 1	GG-M-00114	81348	EA	3	0	REV 7271	7520000790286
MARKER, TUBE TYPE PER BOX	-COLOR-RED, I DOZEN	GG-M-00114	81348	EA	3	0	1 DZ PER BOX CONSUMABLE FOR TM 55-1520-210-23-1	7520009731062
MARKER, TUBE TYPE	-1 DOZEN PER BOX	MARKSALOTRED	03042	EA	3	0	REV 7157	7520009731062
MAT, ABRASIVE	MIL-A-9962, TY1, CL1, GRA	MIL-A-9962	81349	SH	3	0	REV 7156	5350009675089
MAT, ABRASIVE AND **GRADE** B, 180 TO **240 GRIT**	-TYPE 1 AND CLASS 1	MIL-A-9962	81349	SH	3	0	REV 6357, 7257	5350009675093
MAT, REINFORCING, FIB **THICK,** 2 **INCHES WIDE, 54 YD ROLL**	-WHITE, .0045 INCH	1659	95746	YD	3	0	**REV 7273**	**9340011778572**
MAT, REINFORCING, FIB	-50 YARD ROLL	1659	95746	YD	3	0	REV 7240	9340011778572
METAL BAR	**-REV 7253**	**TYPE 17-4PH CONDITION A**	**18702**	SH	1	0	**9510011326622**	
METAL FOIL 36 INCHES WIDE, 250 **FOOT** ROLL	-.0035 INCHES THICK,	QQ-A-18761	81348	FT	3	0	REV 7273	9535007529061
METAL FOIL **ALUMINUM** IN WD ROLL	-TY 1 GR B, 75 FT 12	QQ-A-1876	81348	FT	3	0	REV 7272	9535005412453
METHANOL, TECHNICAL	-5 GALCAN, AGRADE	O-M-232	81348	GL	3	6	REV 7273	6810002756010
METHANOL, TECHNICAL	-5 GL CAN	O-M-232	81348	GL	3	6	REV 7237	6810002756010
METHYL ETHYL KETONE -		M209-S	22527	GL				
METHYL ETHYL KETONE BOTTLE	-CRYSTAL FORM 1 LB	OC265	81348	LB	3	0	REV 7275	6810002816929

Downloaded from http://www.everyspec.com

CONSUMABLE ITEMS PART 2

NOMENCLATURE		P/N	FSCM	UM	EC	SL	ADDITIONAL INFO	NSN
METHYL ETHYL KETONE	-1 GALLON CAN	TT-M-261	81348	GL	3	0	REV 7157	6810002812785
METHYL ETHYL KETONE	-1 PT CAN	OC265	81348	PT	3	0	REV 8039	6810002816929
METHYL ETHYL KETONE	-5 GL CAN	TT-M-261	81348	GL	3	0	REV 7237	6810002812762
METHYL ETHYL KETONE	-5 GL CAN	TT-M-261	81348	GL	3	0	REV 8039	6810002812762
METHYL ETHYL KETONE	-55 GL DRUM	TTM261	81348	GL	3	0	REV 7243	6810002812763
METHYLISOBUTYLKET 55 GL DRUM	-ASTMD 1153TY2,	D 1153	81346	GL	3	0	REV 7243	6810002812761
METHYL ISOBUTYL KET GL DRUM	-ASTM D 1153 TY 2, 5	D 1153	81346	GL	3	0	REV 7243	6810001805976
METHYL ISOBUTYL KET	-1 GAL CAN	D 1153	81346	GL	3	0	REV 7351	6810002863785
MOLYBDENUM DISULFID -		55-1043-1	83323	LB	1	7		6810002646715
MOLYBDENUM DISULFID DISULFIDE, TECHNICAL, 1 LB CAN	-MILM7866, MOLYBDENUM,	MIL-M-7866	81349	LB	3	7	REV 7156	6810002646715
NAPHTHA, ALIPHATIC	-1 GALLON CAN	TT-N-95 TY2	81348	GL	3	7	REV 7161	6810002388119
NAPHTHA, AROMATIC MIL-N-15178 REPLACE WITH TT-N-97	-1 GL CAN	TT-N-97	81348	GL	3	7	REV 7057 REV 7233	6810002239067
NITRIC ACID, TECHNIC	-	MILSTD605	96906	BT				
NITRIC ACID, TECHNIC	-	O-N-350	81348	PT	3	0	16 OZ BT	6810002229655
NITRIC ACID, TECHNIC	-1 GALLON BOTTLE	ON350	81348	GL	3	0	REV 7211	6810002372918
NITROGEN, TECHNICAL CL 2, 231 CU FT CYL	-BB-N-411 TY 1 GR B	BBN411	81348	CF	3	0	REV 7223, 7243	6830002920732
NITROGEN, TECHNICAL 184 CUBIC FOOT CYLINDER	-BB-N-411, TY1, CL1, GRB,	BB-N-411, TY1, CL1, GRB	81348	CF	3	0	REV 7161	6830007822641
NITROGEN, TECHNICAL AND CLASS 1, 231 CU FT CYLINDER	-TYPE 1 AND GRADE B	BB-N-411	81348	CF	3	0	REV 7271	6830002920131
NITROGEN, TECHNICAL	-231 CUBIC FOOT	BB-N-411	81348	CF	3	0	REV 7351	6830010289402
OH-58D	-	OH-58D	97499	EA	A	0		

Downloaded from http://www.everyspec.com

CONSUMABLE ITEMS PART 2

NOMENCLATURE		P/N	FSCM	UM	EC	SL	ADDITIONALINFO	NSN
ORTHOPHOSPHORIC ACI	-15 GALLON DRLM	0-0-670	81348	GL	3	0	REV 7211	6810008238004
OV-1D OV-1 D CONSUMABLE	-MODEL RECORD FOR	OV-1D	81996	EA	A	0		
OXYGEN, TECHNICAL	-230 CUBIC FOOT CYL	BB-O-925	81348	CF	3	0	REV 7223	6830002920129
PAD, SCOURING	-	TUFFY	92128	EA	1	0	REV 6232	7920006599175
PAD. SCOURING	-	86	27293	EA	3	0	REV 7243	7920009343469
PAD, SCOURING 2, EACH	-L-P-0050 TY 2, CL	LP50	81348	EA	3	0	REV 7243	7920009343469
PAD, SCOURING 4X3.5 IN , NOT SOAP IMPREGNATED TY1, SZ1	-PLASTIC OVAL SHAPE	L-P-0050	81348	EA	3	0	REV 8006	7920006599175
PAD, SCOURING	-TYPE 1	MIL-C-83957	81349	SH	3	0	REV 6357, 7254	7920001516120
PAD, SCOURING	-10 EACH BOX	SCOTCH-BRITE-63	27293	EA	3	0	REV 7161	7920011465127
PAD, SCOURING	-10 PADS PER BOX	BRILLOSOAPPAD	92243	EA	3	0	REV 7218	7920007781660
PAD, SCOURING	-20 PADS TO A BOX	7447	27293	EA	1	0	REV 7232	
PAINT, EPOXY	-	EPOLUX1OOE6AS	93981	EA	3	4		8010008666810
PAINT, STENCIL 1 QTCAN	-COLOR-BLACK #37038,	A-A-1558	58536	OT	3	6	REV 7271	8010002927686
PAINT, STENCIL 1 QT CAN	-COLOR-WHITE #37875,	A-A-1558	58536	QT	3	6	NSN 8010-00-285-4913	
PAPER, ABRASIVE	-	2000	09581	EA	1	0	REV 6230	5350002247215
PAPER, ABRASIVE	-	A-A-1 047	58536	EA				
PAPER, ABRASIVE	-	A-A-1200	58536	EA	1	0	REV 6230	5350007218115
PAPER, ABRASIVE	-	P-P-1 21	81348	PG				
PAPER, ABRASIVE 50 SHEETS PER PACKAGE	-A-A-1200 GRIT 150,	A-A-1200	58536	EA	3	0	REV 7349	5350007218116

Downloaded from http://www.everyspec.com

CONSUMABLE ITEMS PART 2

NOMENCLATURE		P/N	FSCM	UM	EC	SL	ADDITIONALINFO	NSN
PAPER, ABRASIVE 50 SHEETS PER PACKAGE	-A-A-1200 GRIT 220,	A-A-1200	58536	EA	3	0	REV 7349	5350002247209
PAPER, ABRASIVE 50 SHEETS PER PACKAGE	-A-A-1200 GRIT 360,	A-A-1200	58536	EA	3	0	REV 7349	
PAPER, ABRASIVE 100 SHEETS PER PACKAGE	-A-A-1201 GRIT 120,	A-A-1201	58536	EA	3	0	REV 7350	5350002210882
PAPER, ABRASIVE 100 SHEETS PER PACKAGE	-A-A-1201 GRIT 150,	A-A-1201	58536	EA	3	0	REV 7350	5350001868821
PAPER, ABRASIVE 100 SHEETS PER PACKAGE	-A-A-1201 GRIT 220,	A-A-1201	58536	EA	3	0	REV 7350	5350001868819
PAPER, ABRASIVE GRIT 9X11 IN SH	-ALUMINUM OXIDE 100	ADOLOXOPENCOAT	06565	SH	3	0	REV 7225	
PAPER, ABRASIVE GRIT, 9XII INCHES, 50 SHEETS PER PG	GR 11/0, 600	P-P-101	81348	EA	3	0	REV 7273	5350002247215
PAPER, ABRASIVE SHEET GRADE DESIGNATOR 1/0, 50 EACH PKG	GRIT SIZE 80, 9XII1 IN	A-A-1201	58536	EA	1	0	REV 7223	
PAPER, ABRASIVE 50 SHEETS PER PACK	-P-P-101 320 GRIT,	P-P-101	81348	SH	3	0	REV 7239	5350010432278
PAPER, ABRASIVE SHEETS PER PACKAGE	-P-P-101, 120 GRIT, 50	P-P-101, 120 GT	81348	EA	3	0	REV 7161	5350007218115
PAPER, ABRASIVE SHEETS PER PACKAGE	-P-P-101,240 GRIT, 50	P-P-101, 240 GT	81348	EA	3	0	REV 7161	5350002247207
PAPER, ABRASIVE SHEETS PER PACKAGE	-P-P-101, 600 GRIT, 50	P-P-101,600 GT	81348	EA	3	0	REV 8039	5350002247215
PAPER ABRASIVE EACH PACK	-P-P-101, 80 GRIT, 50	PP101	81348	SH	3	0	REV 7198	5350006199167
PAPER, ABRASIVE EXTRA FINE 9XII SHEET 50 EACH	-P-P-121 GRIT 320	A-A-1047	58536	EA	3	0	REV 7280	5350002247203

Downloaded from http://www.everyspec.com

CONSUMABLE ITEMS PART 2

NOMENCLATURE	P/N	FSCM	UM	EC	SL		ADDITIONALINFO	NSN
PAPER, ABRASIVE PER PACKAGE	-180 GRIT, 50 SHEETS	A-A-1200	58536	EA	3	0	REV 7349	53500072181t7
PAPER, ABRASIVE INCHES, 50 SHEETS PER PG	-280 GRIT, GR8/0, 9XII	A-A-1200	58536	EA	3	0	REV 7349	5350002247205
PAPER, ABRASIVE PER PACKAGE	400 GRIT, 50 SHEETS	A-A-1200	58536	EA	3	0	REV 7349	5350002247201
PAPER, ABRASIVE INCHES, 50 SHEETS PER PG	-500 GRIT, 9XII	A-A-1047	58536	EA	3	0	REV 7273	5350002247216
PAPER, ABRASIVE SHEET, 100 SHEETS PER PACKAGE	-60 GRIT 9X1 0	A-A-1202	58536	EA	3	0	REV 7261	5350005986105
PAPER, ABRASIVE INCHES, 50 SHEETS PER PG	-80 GRIT, 9X11	A-A-1047	58536	EA	3	0	REV 7273	5350006199168
PAPER, KRAFT, UNTREAT B, 615 FT ROLL	-TYPE 1 AND GRADE	A-A-203	58536	FT	3	0	REV 6357, 7257	8135001607776
PAPER, KRAFT, UNTREAT 980 FT ROLL	-TYPE 1 AND GRADE B,	A-A-203	58536	FT	3	0	REV 6357, 7257	8135002903407
PAPER, KRAFT, UNTREAT	-25 FT PER ROLL	UU-P-268 TYIGRB	80244	EA	3	0	REV 7156	8135001607759
PAPER,WRAPPING,CHEM AND 30 IN WIDE	-TYPE 1, 600 FT ROLL	MIL-P-17667	81349	FT	3	0	REV 7261	8135005581242
PAPER,WRAPPING,TISS 1, 24 X 36 IN SHEET 480 PER PG	-TYPE 2 AND CLASS	A-A-1249	58536	SH	3	0	REV 7271	8135002811435
PARTS KIT, REPAIR, FI REPAIR	-KIT FIBERGLASS	S1607-7021	78286	EA	3	M	REV 7240	1560008569222
PASTE, ROSIN	-1 QT KIT	RP1220	02684	QT	3	4	1 OT KT CONSUMABLE FOR TM 55-1520-210-23-1	
PENCIL THICK, 6 25 IN LONG, 12 PER BOX	-COLOR WHITE, EXTRA	A-A-87	58536	EA	3	0	REV 7274	7510002401525
PENCIL EXTRA THICK, 6.25 IN LONG, 12 PER BOX	-COLOR YELLOW, SIZE	A-A-87	58536	EA	3	0	REV 7273	7510002644612
PENCIL PER PKG	-COLOR YELLOW, 12 EA	2107	73685	EA	3	0	12 EA PER PKG CONSUMABLE FOR TM 55-1520-210-23-1	7510004650994

Downloaded from http://www.everyspec.com

CONSUMABLE ITEMS PART 2

NOMENCLATURE		P/N	FSCM	UM	EC	SL	ADDITIONALINFO	NSN
PENCIL CORE 12 TO A PACK	-NON-LEADED YELLOW	2107	73685	EA	3	0	REV 7280	7510004650994
PENCIL COLORED LEAD 12 TO THE	-TY 1 CL 1 YELLOW WRAPPER	SS-P-201	81348	EA	3	0		7510002855832
PENETRATING OIL	-TY1, I1 PTCAN	VV-P-216	81348	PT	3	7	REV 7275	9150002617899
PENETRATING OIL	-1 PT CAN	VV-P-216	81348	PT	3	7	REV 7223	9150002617899
PETROLATUM, TECH	-	DEF2333PX7	U1857	LB				
PETROLATUM, TECH	-	9150-042	D9455	LB				
PETROLATUM, TECHN	-	PX7-1POUND CAN	K6231	LB	1	6	REV 6230	9150002500926
PETROLATUM, TECHN	-	14P1	82146	LB	1	6	REV 6230	9150002500926
PETROLATUM, TECHN	-	44D111	25140	LB	1	6	REV 6230	9150002500926
PETROLATUM, TECHN	-	9150-042-1POUNDCAN	D9455	LB	1	6	REV 6230	9150002500926
PETROLATUM, TECHN 1.750 LB CAN	CL 2 AND TY 4,	W-P-236	81348	LB	3	6	REV 7275	9150002500926
PETROLATUM, TECHN 50 LB CAN	-W-P-236, TY5, CL2, 1.7	W-P-236	81348	LB	3	6	REV 6225, REV 7156	9150002500926
PHOSPHORIC ACID,ACS	-4 LITER BOTTLE	A242	22527	PT	3	0	REV 6357 REV 7237	6810011500339
PIGMENT, ALUMINUM	-1 LB CAN	A-A-341	58536	LB	3	7	REV 7350	8010006874019
PIGMENT, IRON BLUE TUBE	-BLUE COLOR 2A, 2 OZ	TT-P-381	81349	OZ	3	7	REV 8039	8010005510128
PIGMENT, IRON BLUE	-DRY TYPE	TTP385	81348	LB	3	7	8010000078164	
PIGMENT, IRON BLUE	-2 OZ TUBE COLOR 2A	TT-P-381	81348	OZ	3	7	REV 7280	8010005510128
PIGMENT, RED OXIDE	-16 OZ SQUEEZE BOTTLE	B-3100F	80000	OZ	3	7	REV 7280	8010010166584
PLASTIC COATING COM	-TYPE 1, 5 GL PAIL	MIL-C-16555	81349	GL	3	4	REV 7261	8030002758093

Downloaded from http://www.everyspec.com

CONSUMABLE ITEMS PART 2

NOMENCLATURE	P/N	FSCM	UM	EC	SL	ADDITIONALINFO	NSN
PLASTIC COATING COM -TYPE 2 AND CLASS 5, 5 GAL CAN	MIL-C-6799	81349	GL	3	5	5 GL CN CONSUMABLE FOR TM 55-1500-204-25/1	8030002970189
PLASTIC MOLDING MAT -KITCONTAINS5GALS OF RESIN AND 1 GAL OF HARDENER	EPOCAST31A	99384	GL	1	H	REV 7232	9330007382626
PLASTIC SHEET - 062 TK 48X24 INCH SHEET POLYHEXAMETHYLENE ADIPAMIDE COMP	LP410	81348	SH	3	0	REV 7280	9330001438604
PLASTIC SHEET -A FINISH, 48 X 38 IN 0.187 IN THICK	MIL-P-5425	81349	SH	3	0	REV 7271	9330004833266
PLASTIC SHEET -COLOR BLACK #27038 NDP TYPE, 36 IN WD 42 IN LG 062 IN TK	LP387	81348	IN	3	0	36 IN WD 42 IN LG 062 IN TK TM 55-1500-345-23	9330002825640
PLASTIC SHEET -FMB TYPE, 1 IN THK, 38 IN WIDE, 48 IN LONG	MIL-P-15035	81349	SH	3	0	REV 7273	9330005858678
PLASTIC SHEET -MIL-F-46895 2MIL THK	MIL-F-46895	81349	SH	3	7	REV 7161	
PLASTIC SHEET -MIL-P-15035 TYPE FBM, 0.625 THICKNESS	MILP15035	81349	SH	3	0	REV 6302 REV 7223	9330002603800
PLASTIC SHEET -POLYVINYL CHLORIDE, CLEAR CL 8 13X816001N RL	A-A-1766	58536	IN	3	0	REV 7225	8135004765268
PLASTIC SHEET -SHEET	L-P-410	81348	SH	1	0	REV 7232	9330010289334
PLASTIC SHEET -SIZE 24X24 IN ,1 0 IN THK, EXTRUDED	L-P-410	81348	SH	3	0		
PLASTIC STRIP, ADHES -ADHESIVE COATED, ACETONE TY, .026 THK, 5 IN WD, 8FT RL	WX-1206	61784	FT	3	0	REV 7273	9330012028903
PLASTIC STRIP, PRESS -CLEAR, 2 INCHES WIDE, 36 YD ROLL	SJ8561	52152	YD	3	0	REV 8039	9330001696407
PLASTIC STRIP, PRESS -1 IN WIDE X 36 YARD LONG ROLL	1 161	52125	YD	3	0	REV 7280	9330011017505
PLASTIC STRIP, PRESS -18 YD LONG X 5 IN WIDE X .25 THICK	4104	52152	EA	3	4	18 YD LONG X 0 500 IN WIDE X 0.250 THICK	9330009845834

Downloaded from http://www.everyspec.com

CONSUMABLE ITEMS PART 2

NOMENCLATURE	P/N	FSCM	UM	EC	SL	ADDITIONALINFO	NSN
PLASTIC STRIP, PRESS -2 IN WIDE AND 0.014 THICK AND 108 IN LONG ROLL	SJ8561	52152	YD	3	0	REV 7240	9330001696407
PLASTIC STRIP, PRESS -2 IN WIDE AND 108 FT LONG	SJ8561	52152	YD	3	0	REV 7240	9330001696407
PLUG, MACHINE THREAD -	CD7L	36540	EA	1	0	REV 6231	5365007730760
PLUG, MACHINE THREAD -	29994	99167	EA	1	0	REV 6231	5365007730760
PLUG, MACHINE THREAD -EACH	CD7	36540	EA	3	0	REV 7351	5365007730760
POLISH, EZ Clear	EZ1000		KT	7	4	Refer to para 10-15.2	
POLISH, EZ Clear Spares Kit	EZ1100		KT	7	4	Refer to para 10-15.2	
POLISH, EZ Clear Prep	EZ1200		GL	7	4	Refer to para 10-15.2	
POLISH, EZ Clear Cleaner	EZ1300		GL	7	4	Refer to para 10-15.2	
POLISH, METAL -TYPE 1, 1 GL CAN	MIL-P-6888	81349	GL	3	6	REV 6232, 7254	7930002671224
POLISH, PLASTIC -TYPE 1, 1 PINT BOTTLE	P-P-560	81348	PT	3	0	REV 7273	7930011154744
POLISHING ABRASIVE, -SIZE B, 2 AND 1/2 LB CAN	MILP3237	81349	LB	3	0	2 1/2 LB CN CONSUMABLE FOR TM 55-1520-210-23-1	5350002998651
POLYURETHANE COATIN -AIRCRAFT GREEN, 55 GAL DRUM, COMP A	MIL-C-46168	81349	GL	3	4	55 GAL DRUM COMP A TM 55-1500-345-23	8010011299348
POLYURETHANE COATIN -AIRCRAFT GREY EXTERIOR, 1 GAL COMP A AND 1 QT COMP B	MIL-C-46168	81349	GL	3	4	1 GAL COMP A AND 1 QT COMP B TM 55-1500-345-23	8010011278908
POLYURETHANE COATIN -COLOR NO 33531 (SAND), 1 GL CAN, KIT	MIL-C-46168	81349	GL	1	4	REV 7232	8010011316255
POLYURETHANE COATIN -COMP B FOR ALL 55 GAL DRUMS	MIL-C-46168	81349	GL	3	4	COMP B FOR ALL 55 GAL DRUMS TM 55-1500-345-23	8010011320205
POLYURETHANE COATIN -MIL-C-46168 TY 1 GRAY #36231, KIT 1 GL COMPONENET A	MIL-C-46168	81349	GL	3	4	REV 6357, 7252	8010011462649
POLYURETHANE COATIN -MIL-C-46168 TY 1 WHITE #37875, KIT 1 GL COMPONENT A	MIL-C-46168	81349	GL	3	4	REV 7252	8010011316262
POLYURETHANE COATIN -MIL-C-46168 TY1 AIRC RAFT GREEN 1 GAL COMPA 1 QT COMP B KIT	MIL-C-46168	81349	GL	1	4	REV 7232	8010011316255
POLYURETHANE COATIN -MIL-C-46168, A/C BLACK #37038, 1 GALLON CAN	MIL-C-46168	81349	GL	3	4	REV 7161	8010011462646

Downloaded from http://www.everyspec.com

CONSUMABLE ITEMS PART 2

NOMENCLATURE	P/NFSCM	UM	EC	SL		ADDITIONALINFO	NSN
POLYURETHANE COATIN MIL-C-46188 TYPE 1 A/C RED #31136, 1 GL COMPONENT A	MIL-C-46168	81349	GL	3	4	REV 7252	8010011449873
POLYURETHANE COATIN- OLIVE DRAB #34087, 1 GAL COMP A AND 1 QT COMP B	MIL-C-46168	81349	GL	3	4	1 GAL COMP A AND 1 QT COMP B KIT TM 55-15-345-23	8010011316262
POLYURETHANE COATIN -TY I AIRCRAFT GREEN, 4 GAL COMP A AND 1 GAL OF COMP B	MIL-C-46168	81349	GL	3	4	4 GAL COMP A AND 1 GAL COMP B KIT TM 55-1500-345-23	8010011316262
POLYURETHANE COATIN -TY I AIRCRAFT GREEN, 1 QT COMP A AND 1/2 PT COMP B	MIL-C-46168	81349	QT	3	4	1 QT COMP A AND 1/2 PT COMP B TM 55-1500-345-23	8010011412420
POLYURETHANE COATIN -TY I AIRCRAFT GRAY, 1 QT COMP A AND 1/2 PT COMP B	MIL-C-46168	81349	QT	3	4	1 QT COMP A AND 1/2 PT COMP B TM 55-1500-345-23	8010011449882
POLYURETHANE COATIN -TY I AIRCRAFT GREY EXTERIOR, 4 GAL COMP A AND 1 GAL COMP B	MIL-C-46168	81349	GL	3	4	4 GAL COMP A AND 1 GAL COMP B TM 55-1500-345-23	8010011449876
POLYURETHANE COATIN -TY I RED #31136, 1 QT COMP A AND 1/2 PT COMP B	MIL-C-46168	81349	QT	3	4	1 QTCOMP A AND 1/2 PT COMP B TM 55-1500-345-23	8010011449884
POLYURETHANE COATIN -TY I RED #31136, 4 GAL COMP A AND 1 GAL COMP B	MIL-C-46168	81349	GL	3	4	4 GAL COMP A AND 1 GAL COMP B TM 55-1500-345-23	8010011449878
POLYURETHANE COATIN -TY 1 BLACK #37038, 1 QT COMP A AND 1/2 PT COMP B	MIL-C-46168	81349	QT	3	4	1 QT COMP A AND 1/2 PT COMP B TM 55-1500-345-23	8010011449885
POLYURETHANE COATIN -TY 1 BLACK #37038, 4 GAL COMP A AND 1 GAL COMP B	MIL-C-46168	81349	GL	3	4	4 GAL COMP A AND 1 GAL COMP B TM 55-1500-345-23	8010011449879
POLYURETHANE COATIN -TY 1 BLUE #35044, 1 GAL COMP A AND 1 QT COMP B	MIL-C-46168	81349	GL	3	4	1 GAL COMP A AND 1 QT COMP B TM 55-1500-345-23	8010011462648
POLYURETHANE COATIN -TY 1 BLUE #35044, 4 GAL COMP A AND 1 GAL COMP B	MIL-C-46168	81349	GL	3	4	4 GAL COMP A AND 1 GAL COMP B TM 55-1500-345-23	8010011449880
POLYURETHANE COATIN -TY 1 BLUE #35044, 1 QT COMP A AND 1/2 COMP B	MIL-C-46168	81349	QT	3	4	1 QT COMP A AND 1/2 COMP B TM 55-1 500-345-23	8010011449887
POLYURETHANE COATIN -TY 1 OLIVE DRAB #34087, 4 GAL COMP A AND 1 GAL COMP B	MIL-C-46168	81349	GL	3	4	4 GAL COMP A AND 1 GAL COMP B TM 55-1500-345-23	8010011449875
POLYURETHANE COATIN -TY 1 WHITE #37875, 1 QT COMP A AND 1/2 PT COMP B	MIL-C-46168	81349	QT	3	4	1 QT COMP A AND 1/2 PT COMP B TM 55-1500-34523	8010011449883

Downloaded from http://www.everyspec.com

CONSUMABLE ITEMS PART 2

NOMENCLATURE	P/N	FSCM	UM	EC	SL	ADDITIONALINFO	NSN
POLYURETHANE COATIN -TY1 WHITE #37875, 4 GAL COMP A AND 1 GAL COMP B	MIL-C-46168	81349	GL	3	4	4GALCOMPAAND 1 GAL COMP B TM 55-1500-345-23	8010011449877
POLYURETHANE COATIN -TY 1, BLACK #37038, 1 QT KIT	MIL-C-83286	81349	QT	3	4	REV 7275	8010004825671
POLYURETHANE COATIN 1 QT KIT	MIL-C-83286	81349	QT	3	6	REV 6357 REV 7237	8010001818276
POLYURETHANE, COAT -TY 1, COLOR #33538, YELLOW, GAL COMP A AND 1 QT COMP B, KIT	MIL-C-46168	81349	GL	3	4	REV 7280	
POLYURETHANE, COAT -TY 1, COLOR #33538, YEL LOW, 1 QT COMP A AND 1/2 PT COMP B, KIT	MIL-C-46168	81349	QT	3	4	REV 7280	
POTASSIUM DICHROMAT -5 POUND BOTTLE	O-P-559	81348	LB	3	0	REV 7218	6810002646525
POTASSIUM DICHROMAT -99 0 MIN BYWT 5 LB BOX	O-P-559	81348	LB	3	0	REV 7273	6810002646525
PRIMER COATING -COMPOSITION L AND COLOR T, 1 GALLON CAN	TT-P-1757	81348	GL	3	6	REV 7273	8010005825318
PRIMER COATING -L COMPOSITION AND Y COLOR	TT-P-1757	81348	GL	3	6	1 GL CN CONSUMABLE FOR TM 55-1500-333-24	8010005152208
PRIMER COATING -MIL-P-23377 TY 1, KIT TWO 5 GL PAILS	MIL-P-23377	81349	GL	3	4	REV 7243	8010000822477
PRIMER COATING -MIL-P-23377 TY2	MIL-P-23377	81349	GL	3	4	KIT	8010000822450
PRIMER COATING -MIL-P-52192 CPL, 1 GALLON ADHESIVE AND 1 QUART CATALYST KIT	MIL-P-52192	81349	OZ	3	6	REV 7157	8010000821714
PRIMER COATING -MIL-P-7962 12 OZ CAN AEROSOL	MIL-P-7962	81349	OZ	3	6	REV 7238	8010005842426
PRIMER COATING -TT-P-1757 COMPOSITION L COLOR T, 16 OZ AEROSOL CAN	TT-P-1757	81348	OZ	3	6	REV 7243	8010008998825
PRIMER COATING -TT-P-1757 COMP L COLOR T, 1 GALLON CAN	TT-P-1757	81348	GL	3	6	REV 8039	8010005825318
PRIMER COATING -TT-P-1757 COMPOSITION L COLOR T, 1 QT CAN PRESSURIZED	TT-P-1757	81348	OZ	3	6	REV 7243	8010008990931
PRIMER COATING -TT-P-1757 L COMPOSITION AND Y COLOR, 16 OZ AEROSOL CAN	TT-P-1757	81348	PT	3	6	REV 7239	8010002970593

Downloaded from http://www.everyspec.com

CONSUMABLE ITEMS PART 2

NOMENCLATURE		P/N	FSCM	UM	EC	SL	ADDITIONALINFO	NSN
PRIMER COATING	-TYPE 1, 1 PT KIT	MIL-P-23377	81349	PT	3	4	REV 6357, 7257	8010001429279
PRIMER COATING	-1 PT CAN	TT-P-1757	81348	PT	3	6	REV 7280	8010005825318
PRIMER COATING PT PART B KIT	-1 QT PART A AND 1/2	MIL-P-53030	81349	QT	3	4		8010011930519
PRIMER COATING	-15 OZ CAN	81	26066	OZ	3	6	REV7243	8010010400947
PRIMER, SEALING COM	-	747-56	05972	EA	1	5	REV 6232	8030001818372
PRIMER, SEALING COM	-	74756	05972	EA	1	5	REV 6232	8030001818372
PRIMER, SEALING COM CAN EA	GRADE T, FORM R, 6 OZ	MIL-S-22473	81349	OZ	3	5	REV 8034	8030001818372
PRIMER, SEALING COM AND FORM R, 1 GL CAN	-MIL-S-22473 GRADE N	MIL-S-22473	81349	GL	3	5	REV 7239	8030001818372
PRIMER, SEALING COM	-6 OUNCE CAN	MIL-S-22473	81349	OZ	3	5	REV 7161	8030001818372
PRIMER, SEALING COM	-6 OZ CAN AEROSOL	747-56	05972	EA	1	5	REV 7224	8030001818372
PRIMER, ADHESIVE	-	A-4094	71984	PT	1	2	REV 6231	8040008454304
PRIMER, ADHESIVE	-	588-017-9001	70210	PT	1	2	REV 6231	8040008454304
PRIMER, ADHESIVE	-	83842	19203	PT				
PRIMER, ADHESIVE	-	838842	19203	PT				
PRIMER, ADHESIVE	-EA9210, 1 GALLON CAN	EA9210	12405	GL	3	0	REV 7161	8040012047187
PRIMER, ADHESIVE 1 QT CN KIT	-EPOXY RESIN PLASTIC	EC1945 B/A	76381	QT	1	4	REV 8013	8040000656578
PRIMER, ADHESIVE	-TY 1, 1 PT CN	MIL-A-46106TYPE1-1PTCAN	81349	QT	3	2		8040007019616
PRIMER, ADHESIVE	-1 PINT CAN	1200 RTV PRIME COAT-CLEAR	71984	PT	3	2		8040008454304
PRIMER, ADHESIVE	-1 PT CAN	A934B	03481	OZ	3	4	1 PT CN CONSUMABLE FOR TM 55-1520-210-23-1	8040009432502
PRIMER, ADHESIVE	-1 PT CAN	DC S2260	71984	PT	3	0	REV 7275	8040007129058

Downloaded from http://www.everyspec.com

CONSUMABLE ITEMS PART 2

NOMENCLATURE		P/N	FSCM	UM	EC	SL	ADDITIONALINFO	NSN
PRIMER, ADHESIVE	-1 PT CAN	A934B	03481	PT	3	4	REV 7351	8040009432502
PRIMER, ADHESIVE	-1 QT CAN	EA9203	33564	OT	3	0	REV 7240	8040010169963
PRIMER, SEALANT	-	LOCQUIC	05972	OZ				
PRIMER, SEALANT	-	STA-LOK PRIMER F	27079	OZ				
		DELETED						
		DELETED						
		DELETED						
PROPELLANT PRESSURI ISSUE	GRADE A, TYPE 1, BULK	MIL-P-27401	81349	CF	3	0	REV 7273	9135008238115
PROTECTIVE SKIN CRE	-4 OZ TUBE	NDC000046007104	98377	OZ	3	0	REV 7157	6505010416902
PUMICE, TECHNICAL	-1 POUND	SS-P-821 GRFFF	80244	LB	3	0	REV 7157	5350001619033
PUTTY	-10 LB CAN	MILP8116-1OLBCN	81349	LB	3	7	REV 7070, 7239	8030006644968
RAG, WIPING	-	DDD-R-30	81348	EA	3	0		7920002051711
RAG, WIPING BALE	-A-A-531 GR A, 50 LB	A-A-531	58536	LB	3	0	REV 7212	7920001489666
RAG, WIPING COLORS, 50 LB BALE	-A-A-531, GRB, MIXED	A-A-531	58536	LB	3	0	REV 7156	7920002051711
RAIN REPELLENT, WIND	-8 OZ BOTTLE	MIL-W-006882	81349	OZ	3	0	REV 8035	6850001395297
REMOVER, PAINT	-	TURCO5469	61102	GL	1	4	REV 6231	8010001817568
REMOVER, PAINT	-CLASS 1,400 LB DRUM	TT-R-230	81348	LB	3	6	REV 7253	8010002271693
REMOVER, PAINT GL CAN	-MIL-R-81294 TY 1, 5	MIL-R-81294	81349	GL	3	4	REV 7243	8010009261488
REMOVER, PAINT NIC REMOVER FOR EPOXY AND POLYURETHANE PAINT	-NONFLAMMABLE, ORGA	MIL-R-81294	81349	GL	3	2	REV 7156	8010010880105
REMOVER, PAINT NIC REMOVER FOR EPOXY AND POLYURETHANE PAINT	-NONFLAMMABLE, ORGA	MIL-R-81294 TY 1	81349	GL	3	4		8010009261488

Downloaded from http://www.everyspec.com

CONSUMABLE ITEMS PART 2

NOMENCLATURE		P/N	FSCM	UM	EC	SL	ADDITIONALINFO	NSN
REMOVER, PAINT	-TT-R-251 TY4 CLB	TT-R-251	81348	GL	3	6		8010009264727
REMOVER, PAINT	-TYPE 1 55 GL DRUM	MIL-R-81294	81349	GL	3	4	REV 7257	8010009261489
REMOVER, PAINT	-TYPE 1, 1 GALLON CAN	MIL-R-81294	81349	GL	3	4	REV 8034	8010001817568
REMOVER, PAINT	-TYPE 1, 1 PT CAN	MIL-R-81294	81349	PT	3	4	REV 7257	8010001429273
REMOVER, PAINT	-1 GAL CAN	MIL-R-25134	81349	GL	3	2	1 GAL CAN TM 55-1500-345-23	8010008152970
REMOVER, PAINT	-5 GL PAIL	TT-R-248	81348	GL	3	4	REV 7243	8010005152258
REMOVER, PAINT	-55 GALLON DRUM	MIL-R-83936	81349	GL	3	2	REV 6224, REV 7162	8010010401059
REPAIR KIT, EROSION	-1 KIT	K747-207-1	84955	EA	3	0	REV 7275	1560011612805
REPAIR KIT, SUPPRESS	-1 EA KIT	205-706-083-1	97499	EA	3	0	REV 7275	1560001033459
RESIN	-1 QUART CAN	A4405	04347	QT	3	4	REV 7273	8040001049505
RESIN COATING, THERM	-1 PT CN	828	86961	PT	3	4	REV 7271	8030000861506
RESIN COATING, THERM	-1 QT CAN	MILR3043	81349	QT	3	6	REV 7223	
RESIN COATING, THERM	-9.8 LB CAN	HERESITEP-413-D	73159	LB	3	0	REV 7211	8030010424115
RESIN, EPOXY, LOW-PR LIQUID, 1 GALLON CAN	-MIL-R-9300 TY 1 GRO	MIL-R-9300 TY 1, GRO, LIQUID	81349	GL	3	0	REV 8345 REV 7161	
ROD, WELDING LONG & .188 ROUND ROD	-CL ER347, 36 IN	AWSA5.9-81 ER347 0.188	31505	LB	3	0	36 IN LONG & 0.188 ROUND ROD-OXYACETYLENE-ALL POSITIONS	3439002881471
ROD, WELDING & .125 IN ROUND GAS TUNGSTEN ARC	-CLASS 3, 36 IN LONG	AWSA5.9-77 ER 310 0.125	31505	LB	3	0	36 IN LONG & 0.125 IN ROUND -ALL POSITIONS-GAS TUNGSTEN ARC	3439002881469
ROD, WELDING	-LB	AMS5786	81343	LB	3	0	REV 7223	3439001669584
ROD, WELDING FILLER, STRAIGHT FORM, LGTH 3 IN, LB	-NICKEL ALLOY	AMS5832 0.045	81343	LB	3	0	REV 7225	3439000085067
ROD, WELDING CL ERNIMO-3 NICKEL ALLOY FILLER OXYACETYL	-0.062 OD 36 IN LONG	AMS5786 0.062 361N LG	81343	LB	3	0	REV 7280	3439001788597
ROD, WELDING CL 5 STEEL FILLER OXYACETYLENE	-0.062 OD 36 IN LONG	MIL-R-5031	81349	LB	3	0	REV 7280	3439002460575

Downloaded from http://www.everyspec.com

CONSUMABLE ITEMS PART 2

NOMENCLATURE		P/N	FSCM	UM	EC	SL	ADDITIONALINFO	NSN
ROD, WELDING QQ-R-566 CL 4043 ALUM ALLOY FILLER OXYACE	-0.062 OD 36 IN LONG	AWSA5.10-80 ER4043 0.062	31505	LB	3	0	REV 7280	3439001788590
ROD, WELDING LB PG 36 IN LONG & .062 ROUND ROD	-14-76 ERNIMO-3, 10	AWSA5.14-76 ERNIMO-3 0.062	31505	LB	3	0	10 LB PG 36 IN LONG & 0.062 ROUND ROD-GAS TUNSTEN ARC	3439001788597
RDD, WELDING ROUND ROD	-36 IN LONG & .062	AMS5784 0.062	81343	LB	3	0	36 IN LONG & 0.062 ROUND ROD-GAS METAL ARC-ALL POSITIONS	3439004719899
ROPE, FIBROUS	-	1-4INDIA	72205	FT	1	0	REV 6230	4020005239641
ROPE, FIBROUS	-	8198810	19200	FT	1	0	REV 6230	4020005239641
ROPE, FIBROUS CIRCUMFERENCE, 14 YDS LENGTH	-ROPE, FIBROUS, 1 IN	MILR17347	81349	FT	3	0		
ROPE, FIBROUS SPOOL	-3/4" CIRCUM, 900 FT	MILR17343	81349	FT	3	0	REV 7161	4020005239641
ROUGE, ABRASIVE	-TYPE 1, 1/2 POUND EA	MIL-B-16909	81349	LB	3	0	REV 7273	5350002402213
ROUGE, ABRASIVE	-TYPE 1, 1/4 LB STICK	MIL-B-16909	80244	LB	3	0	REV 7271	5350002235581
RUBBER GLOVES	-SIZE 8-1/2, EACH	11G-1000 SZ8 1/2	44379	EA	3	0		1680011949799
RUBBER SHEET TK 36X36 IN SHEET	-TYA GR 60 CL2.625	MILR6855	81349	SH	3	0	REV 7280	
RUBBER SHEET, CELLUL SOFT, .125 THK, 36X36 IN SH	-GR A, TY 2, COND	MIL-R-6130	81349	SH	3	0	REV 7275	9320008144583
RUBBER SHEET, CELLUL GRADE A, CONDITION MEDIUM, 36 IN WIDE AND	-MIL-R-6130 TYPE 2,	MIL-R-6130	81349	SH	3	0	REV 7237	9320010241549
RUBBER SHEET, CELLUL SC STYLE E GR SCE3L, SHEET	-MIL-STD-670 TY S CL	MIL-C-3133	81349	SH	3	0	REV 7240	9320011542225
RUBBER SHEET, CELLUL TY2 GR A COND MEDIUM .50 TK 36 X 36 IN SHEET		MIL-R-6130	81349	SH	3	0	REV 7280	9320006183180
RUBBER SHEET, SOLID WIDE, SELF SEALING	- .031 THK, 48IN	5253	89373	YD	3	7	REV 7275	9320009498363
SCALE CONDITIONER	-200 LB DRUM	DIVERSEY 299	33759	LB	3	0	200 LB DR CONSUMABLE FOR TM 55-1520-210-23-1	6850010316399
SCOURING POWDER	-	P-S-311 TY 2	80244	OZ	3	0		7930002050442

Downloaded from http://www.everyspec.com

CONSUMABLE ITEMS PART 2

NOMENCLATURE		P/N	FSCM	UM	EC	SL	ADDITIONALINFO	NSN
SCOURING POWDER	-	A-A-47	58536	EA				
		DELETED						
SEALANT, SILICONE	-8 OZ TUBE	SILASTIC 732 RTV	71984	OZ	1	0		
SEALING COMPOUND	-	BMS8-45	81205	OZ	1	2	REV 6230	8030007794700
SEALING COMPOUND	-	62-1926-2604-2	D2607	OZ	1	2	REV 6230	8030007794700
SEALING COMPOUND	-	642AS0819	30003	OZ	1	2	REV 6230	8030007794700
SEALING COMPOUND	-	635	05972	CC				
SEALING COMPOUND	-	PR1436G	83574	GL				
SEALING COMPOUND	-	PR1436GSPRAYABLE	83574	GL				
SEALING COMPOUND	-	CPAREN4-1 PAREN	05972	CC	1	6	REV 6230	8030009647537
SEALING COMPOUND	-	LOCTITE 84	05972	CC				
SEALING COMPOUND	-	LOCTITEC	05972	CC				
SEALING COMPOUND	-	SM9060-3	04614	CC	1	6	REV 6230	8030009647537
SEALING COMPOUND	-	SM9060-3	91547	CC				
SEALING COMPOUND	-	7956584-06	90536	CC				
SEALING COMPOUND		MIL-S-22473 GRA	80244	CC				
SEALING COMPOUND	-	S167 GRADE A	81039	CC				
SEALING COMPOUND	-	08831	05972	CC	1	5	REV 6230	8030000812338
SEALING COMPOUND	-	4275140-1	05869	CC	1	5	REV 6230	8030000812338
SEALING COMPOUND	-	511131-4	80020	CC	1	5	REV 6230	8030000812338
SEALING COMPOUND	-	870378	19203	CC	1	5	REV 6230	8030000812338
SEALING COMPOUND	-	88-31	05972	CC	1	5	REV 6230	8030000812338
		DELETED						
		DELETED						

Downloaded from http://www.everyspec.com

CONSUMABLE ITEMS PART 2

NOMENCLATURE		P/N	FSCM	UM	EC	SL	ADDITIONALINFO	NSN
SEALING COMPOUND	-	MIL-S-8802 TY2CLA-2	80244	OZ				
SEALING COMPOUND	-	PR-1422 A-2 MODEL 654 SEMKIT	83574	OZ				
SEALING COMPOUND	-	PR1422A2KT50	83574	OZ				
SEALING COMPOUND	-	P41422A2MODEL654	83574	OZ				
SEALING COMPOUND	-	609-31	05972	CC	1	5	REV 6231	8030001806222
SEALING COMPOUND	-	609-31	05972	CC	1	5	REV 6231	8030001806222
SEALING COMPOUND	-	609-31	05972	CC	1	5	REV 6231	8030001806222
SEALING COMPOUND	-	609-31	05972	CC	1	5	REV 6231	8030001806222
SEALING COMPOUND	-	MIL-R-46082 TY1	80244	BT				
SEALING COMPOUND	-	RETAININGCOMPOUND 75	05972	BT				
SEALING COMPOUND	-	4-32163-601X	A2608	CC	1	5	REV 6231	8030001806222
SEALING COMPOUND	-	437167	36378	BT		5		8030001806222
SEALING COMPOUND	-	609-31	05972	CC	1	5	REV 6231	8030001806222
SEALING COMPOUND	-	609-31	05972	CC	1	5	REV 6302	8030001806222
SEALING COMPOUND	-	944294-2	06481	BT				
SEALING COMPOUND	-	080-31	05972	CC	1	5	REV 6231	8030000812328
SEALING COMPOUND	-	LOCTITEGRADEE	05972	CC				
SEALING COMPOUND	-	LOCTITETYPEE	05972	CC				
SEALING COMPOUND	-	10587076-3	18876	CC	1	5	REV 6231	8030000812328
SEALING COMPOUND	-	58A5A49-4	10001	CC	1	5	REV 6231	8030000812328
SEALING COMPOUND	-	FRV-1106	01139	OZ				
SEALING COMPOUND	-	378-5621	71984	OZ				
SEALING COMPOUND	-	94-002	71984	OZ				
		DELETED						

Downloaded from http://www.everyspec.com

CONSUMABLE ITEMS PART 2

NOMENCLATURE		P/N	FSCM	UM	EC	SL	ADDITIONALINFO	NSN
SEALING COMPOUND	-	MILS22473GRADET	81349	EA				
SEALING COMPOUND	-	415804-8	96214	EA				
SEALING COMPOUND	-	MILS46163TY1GRDJ-10CC BOTTLE	81349	CC				
SEALING COMPOUND	-	242-21	05972	CC		0		
SEALING COMPOUND	-	24221	05972	CC		0		
SEALING COMPOUND	-	9001512-0011	52571	CC	1	6	REV 6232	
SEALING COMPOUND	-	083-21	05972	CC	1	6	REV 6232	8030000812331
SEALING COMPOUND	-	CV4-O1BLUE10CC PLASTICBOTTLE	05972	CC				
SEALING COMPOUND	-	MILS22473	81349	CC	1	0		
SEALING COMPOUND	-	EC1 675BAA1-2KT25	04963	OZ	1	3	REV 6232	8030007535008
SEALING COMPOUND	-	PR-1422 A-1 /2 MODEL 655 SEMKIT	83574	OZ		3		8030007535008
SEALING COMPOUND	-	PR1 422A1 -2 MODEL 655	83574	OZ		3		8030007535008
SEALING COMPOUND	-	RP1257-3A	02684	GL	3	2	3 GL KIT	8030008913113
SEALING COMPOUND	-	085-21	05972	CC	3	6	REV 6232, 7243	8030000812335
SEALING COMPOUND	-	08521	05972	CC	3	6	REV 6232, 7243	8030000812335
SEALING COMPOUND	-	078-21	05972	CC	3	6	REV 6232, 7243	8030000812326
SEALING COMPOUND	-	07821	05972	CC	3	6	REV 6232, 7243	8030000812326
SEALING COMPOUND	-B-2 CL, 1 PT KT	MIL-S-7124	81349	PT	3	4	1 PT KT TM 55-1500-345-23	8030000249634
SEALING COMPOUND TACK FREE, 50 CC BOTTLE, GR CV	-BLUE, LIQUID, 6 HR	LOCTITE CV	05972	CC	3	6	REV 7275	8030000812330
SEALING COMPOUND PER CASE	-BROWN, 10 BOTTLES	56931	05972	CC	3	0	REV 7273	8030003390310
SEALING COMPOUND CARTRIDGE RED PASTE	-CL B-1/2, 8 OZ	MIL-S-8784	81349	OZ	3	4	8 OZ CARTRIDGE RED PASTE TM 55-1500-345-23	
SEALING COMPOUND KIT	-CLASS A-1/2, 1/2 PT	MIL-S-8784	81349	OZ	3	4	REV 7268030002918380	

Downloaded from http://www.everyspec.com

CONSUMABLE ITEMS PART 2

NOMENCLATURE	P/N	FSCM	UM	EC	SL	ADDITIONALINFO	NSN
SEALING COMPOUND	-CLASS A2, 2 5 OZ	MIL-S-8784	81349	OZ	3	4	REV 7261
CARTRIDGE	8030001520062						
SEALING COMPOUND	-CLASS B-1 /2, 2.5 OZ	MIL-S-8784	81349	OZ	3	4	REV 7261
CARTRIDGE	8030001520022						
SEALING COMPOUND	-CLASS B-2, 12 OZ JAR	MIL-S-8784	81349	OZ	3	4	REV 7261
	8030006802041						
SEALING COMPOUND	-EACH 35	05972	EA	3	0	REV 7225	8030006149206
SEALING COMPOUND	-GRADE AA, 10 CC	MIL-S-22473	80244	CC	3	6	10 CC BT CONSUMABLE
FOR	8030000812336						
BOTTLE						TM 55-1520-210-23-1	
SEALING COMPOUND	-GRADE CV, 50 CC	MIL-S-22473	80244	CC	3	6	50 CC BT CONSUMABLE
FOR	8030000812336						
BOTTLE						TM 55-1520-2023-1	
SEALING COMPOUND	-GRADE H, 10 CC PER	MIL-S-22473	81349	CC	3	6	REV 7273
BTL	8030000812326						
SEALING COMPOUND	-KIT, 1 OT CAN AND	EPOCAST169-9H6	99384	EA	3	4	REV 7243
REQUIRED AMOUNT OF CATALYST	8030001805931						
SEALING COMPOUND	-MIL-S-8516 TY 2 CL	MIL-S-8516	81349	OZ	3	2	REV 7243
2, 1 QT KIT	8030001742597						
SEALING COMPOUND	-MIL-S-22473 GR A	MIL-S-22473	81349	CC	3		6 REV 7240
COLOR RED, 250 CC BOTTLE	8030000676744						
SEALING COMPOUND	-MIL-S-22473 GR A,	MIL-S-22473	81349	CC	3		6 REV 8034
1 0 CC BOTTLE	8030000812331						
SEALING COMPOUND	-MIL-S-22473 GR AV,	MIL-S-22473	80244	CC	3	6	REV 6357, 7252
50 CC BOTTLE	8030000812336						
SEALING COMPOUND	-MIL-S-22473 GR B	MIL-S-22473 GRB	80244	CC	3	6	REV 7243
COLOR YELLOW LIQUID, 10 CC BOTTLE	8030000812335						
SEALING COMPOUND	-MIL-S-22473 GR E,	MIL-S-22473	80244	CC	3		6 REV 7239
50 CC BOTTLE	8030000812336						
SEALING COMPOUND	-MIL-S-22473 GR E,	GRADEE	05972	CC	3	5	REV 7219
50 CUBIC CENTIMETER BOTTLE	8030000812328						
SEALING COMPOUND	-MIL-S-22473 GR H	MILS22473GRADEH	81349	CC	3	6	REV 7243
BROWN LIQUID, 10CC BOTTLE							

Downloaded from http://www.everyspec.com

CONSUMABLE ITEMS PART 2

NOMENCLATURE	P/N	FSCM	UM	EC	SL	ADDITIONALINFO	NSN
SEALING COMPOUND	-MIL-S-22473 GRAA, 8030000812340	MIL-S-22473 GRAA	80244	CC	3	6	REV 6357, 7239
EPOXY RESIN COLOR GREEN, 50 CC BOTTLE							
SEALING COMPOUND	-MIL-S-23586 TYII 8030001236955	MILS23586	81349	PT	3	2	REV 7233
CL2 GRA. 3/4 PT BASE COMPOUND AND PROPER							
SEALING COMPOUND	-MIL-S-8802	MIL-S-8802	81349	OZ	3	REV 7161	8030007535009
TY1, CLA-2, 3 375 OUNCE CARTRIDGE							
SEALING COMPOUND	-MIL-S-8802	MIL-S-8802 TY1CLA-1	80244	OZ	3	REV 7161	8030011565308
TY1CLA-1,1 QT KIT							
SEALING COMPOUND	-MIL-S-8802 TY 2 CL 8030006850915	EC1675B	76381	EA	3	3	REV 8004
B-2, QT KIT							
SEALING COMPOUND	-MIL-S-8802 TYPE2 8030007232746	MIL-S-8802	80244	PT	3	3	REV 7239
AND CLASS B-2, 1 PT BASE COMPOUND AND							
SEALING COMPOUND	-MIL-S-8802 TYPE 2 8030007232746	MIL-S-8802	80244	OZ	3	3	REV 8035
AND CLASS B-2, 2 OZ CARTRIDGE							
SEALING COMPOUND	-MIL-S-8802 TY2 8030007535008	MIL-S-8802	81349	OZ	1	3	REV 7232
A-1/2 2 OZ BASE AND CURING AGENT							
SEALING COMPOUND	-MILS11030 TYPE III, 8030009652438	MILS11030	81349	FT	3	4	REV 7243
60 FT ROLL							
SEALING COMPOUND	-ORANGE, 1/2 OZ TUBE 8030011250055	F90OTORQUESEALORANGE	01195	OZ	3	0	REV 7275
SEALING COMPOUND	-PLASTIC EPOXY RESIN, 8030008913113	RP1257-3A	02684	OZ	3	2	REV 8039
BLUE PASTE, 3 GAL KIT, CATALYST INCLUDED							
SEALING COMPOUND	-PR-1750 CLASS 8030003487888	MIL-S-83430	81349	PT	1	3	REV 6224 REV
7161							
A-2, 1/2 PT KIT							
SEALING COMPOUND	-PR-1750 CLASS 8030003487888	MIL-S-83430	81349	PT	3	3	REV 7161
B-1/2, 1 PT KIT							
SEALING COMPOUND	-PROSEAL70682 CLASS 8030006169191	PROSEAL 706 B-2	83527	PT	3	4	REV 7239
B-2, 1/2 PT SEALANT & 1/2 PT JAR							
SEALING COMPOUND	-SEALING COMPOUND 8030000812339	LOCTITE GRADE A	05972	CC	3	6	REV 7238
LIQUID COLOR RED MIL-S-22473							
SEALING COMPOUND	-SEMISOLID, 1 PT CAN 8030002758114	MIL-S-11030	81349	OZ	3	4	REV 7275
TY1							

Downloaded from http://www.everyspec.com

CONSUMABLE ITEMS PART 2

NOMENCLATURE		P/N	FSCM	UM	EC	SL	ADDITIONALINFO	NSN
SEALING COMPOUND	-TAN	PROSEAL 719 B-1/2	83527	GL	3	0		8030011059100
SEALING COMPOUND GALLON KIT	-TAN COLOR, PASTE, 1	PR-9021 B-2	83574	GL	3	0	REV 7273	8030010589968
SEALING COMPOUND	-TY I 8 OZ BOTTLE	MIL-R-46082	81349	OZ	3	5	REV 7280	8030008918358
SEALING COMPOUND	-TY II 11 OZ TUBE	MIL-S-45180	81349	OZ	3	6	REV 7280	8030002523391
SEALING COMPOUND AND GRADE B1, 1 PINT CAN	-TYPE 1 AND CLASS 1	MIL-S-23586	81349	PT	3	2	REV 7261	8030001429128
SEALING COMPOUND 3.5 OZ CARTRIDGE	-TYPE 1 AND CLASS 1,	MIL-S-8516	81349	OZ	3	2	REV 7261	
SEALING COMPOUND	-TYPE 1-1/2, 1 PT KIT	MIL-S-81733	81349	PT	3	2	REV 7257	8030000087207
SEALING COMPOUND	-TYPE 1-2, 1 PT KIT	MILS81733	81349	PT	3	2	REV 6225,7257	
SEALING COMPOUND	-TYPE 1, 1 PT CAN	MILS11030	81349	PT	3	4	1 PT CN CONSUMABLE FOR TM 55-1520-210-23-1	8030002758114
SEALING COMPOUND A-2, 1 QT KIT	-TYPE 2 AND CLASS	MIL-S-8802	81349	QT	3	3	REV 7261	8030007232746
SEALING COMPOUND A-2, 1 PT CAN	-TYPE 2 AND CLASS	MIL-S-8802	81349	PT	3	3	REV 7261	
SEALING COMPOUND B-2, 1 OT KIT	-TYPE 2 AND CLASS	MIL-S-8802	81349	OZ	3	3	REV 7261	8030006850915
SEALING COMPOUND 1 QT CAN W/CATALYST	-TYPE 2 AND CLASS 1,	MIL-S-8516	81349	QT	3	2	REV 7257	8030008815238
SEALING COMPOUND 2 1/2 OZ CARTRIDGE W/CATALYST	-TYPE 2 AND CLASS 1,	MIL-S-8516	81349	OZ	3	2	REV 7261	
SEALING COMPOUND AND GRADE A, 3/4 PINT CAN W/CATALYST	-TYPE 2 AND CLASS 2	MIL-S-23586	81349	PT	3	2	REV 7261	8030001236955
SEALING COMPOUND 1/2 PT CAN W/CATALYST	-TYPE 2 AND CLASS 3,	MIL-S-8516	81349	PT	3	2	REV 7257	
SEALING COMPOUND	-TYPE 2-1/2, 1 PT KIT	MILS81733	81349	PT	3	2	REV 7257	8030000087198
SEALING COMPOUND	-TYPE 2, 1 QT KIT	DOD-C-24176	81349	QT	3	4	REV 7272	8030006708553

Downloaded from http://www.everyspec.com

CONSUMABLE ITEMS PART 2

NOMENCLATURE	P/N	FSCM	UM	EC	SL	ADDITIONALINFO	NSN
SEALING COMPOUND -TYPE 2, 250 000 CC BOTTLE	MIL-R-46082	81349	CC	3	5	REV 7261	8030001817529
SEALING COMPOUND -TY2 CL3 24 OZ IN A 1 QT CAN W/REQ CATALYST	MIL-S-8516	81349	QT	3	2	REV 8035	8030006848790
SEALING COMPOUND -1 GALLON KIT	MIL-S-81733	81349	GL	3	2	REV 7161	8030008718489
SEALING COMPOUND -1 GL CAN	SERMASEAL570A	78710	GL	1	0	REV 7223	8030011236659
SEALING COMPOUND -1 GL KIT	EC801	04963	GL	3	4	REV 7273	8030003226928
	DELETED						
SEALING COMPOUND -1 PT CAN	MIL-S-7916	81349	PT	3	2	REV 7271	8030005434384
SEALING COMPOUND -1 PT CAN	MIL-S-4383	81349	PT	3	4	REV 7271	8030006644019
SEALING COMPOUND -1 PT CAN OF BASE W/REQ CATALYST KIT	PROSEAL 700	83527	PT	3	2	REV 7280	8030007235345
SEALING COMPOUND -1 QT KIT TY2 PLASTIC, EPOXY RESIN, GRAY, PASTE, CATALYST INCLUDED	MIL-C-24176	81349	OZ	3	4	REV 7275	8030006708553
SEALING COMPOUND -1/2 PT BASE REQ CATALYST TY2 CLB-2 KIT	MIL-S-8802	81349	PT	3	3	REV 8035	8030007534599
SEALING COMPOUND -1/2 PT CAN	TT-S-1732	81348	PT	3	4	REV 7240	
SEALING COMPOUND -1/2 PT CAN	TT-S-1732	81348	PT	3	4	REV 8039	8030002098005
SEALING COMPOUND -1/2 PT SEALANT 1/2 PT CATALYST KIT CL B-2	PROSEAL 706 8-2	83527	PT	3	4	REV 7280	8030006169191
SEALING COMPOUND -10 OZ TUBE	1372W	77247	OZ	3	6	REV 7240	8030005997753
SEALING COMPOUND -24 OZ BASE REQ CATALYST CLB-2 IN A 1 QT CAN	MIL-S-7124	81349	OZ	3	4	REV 7280	8030002758117
SEALING COMPOUND -242-21 CONFORMS TO MIL-S-46163, TY1, GRA, 10 CC BOTTLE	MIL-S-46163	81349	CC	3	0	REV 6232 REV 7224	8030010888140
SEALING COMPOUND -250 CUBIC CENTIMETER BOTTLE	MIL-S-22473 GRC	81349	CC	3	6	REV7161	8030009647537

Downloaded from http://www.everyspec.com

CONSUMABLE ITEMS PART 2

NOMENCLATURE	P/N	FSCM	UM	EC	SL	ADDITIONALINFO	NSN
SEALING COMPOUND	-3-1 TYPE, 1 GAL KIT 8030008718489	MIL-S-81733	81349	GL	3	2	REV 7232
SEALING COMPOUND	4 OZ CAN 98	77247	OZ	3	0	REV 7272	8030010248302
SEALING COMPOUND	-5 OZ TUBE EC1252	04963	OZ	3	2	1 EACH	8030007794700
SEALING COMPOUND	-5 OZ TUBE 120-5	05820	OZ	1	0	REV 7229	8030010340394
SEALING COMPOUND	-5 OZ TUBE MIL-D-16651	81349	OZ	3	4	5 OZ TUBE TM 55-1500-345-23	8030002643886
SEALING COMPOUND	-50 CC BOTTLE 8030001817603	MIL-R-46082 TY3	81349	CC	3	5	REV 7161
SEALING COMPOUND	-50 CC BOTTLE 8030001116404	64031	05972	CC	3	5	REV 7224
SEALING COMPOUND	-50 CUBIC CENTIMETER 8030000812338	MIL-S-22473 GRA	81349	CC	3	5	REV 7161
BOTTLE							
SEALING COMPOUND	-50 CUBIC CENTIMETER 8030000819022	MIL-S-22473 GRB	81349	CC	3	5	REV 7161
BOTTLE							
SEALING COMPOUND	-50 CUBIC CENTIMETER 8030000812325	MIL-S-22473	81349	CC	3	5	REV 7162
BOTTLE							
SEALING COMPOUND	-50 CUBIC CENTIMETER 8030001806222	MILR46082	81349	CC	3	5	REV 7198
BOTTLE							
SEALING COMPOUND	-50 MILLILITERS TUBE 8030010540740	592-31	05972	MI	3	5	REV 7225
SEALING COMPOUND	-8 OZ CARTRIDGE 8030007554760	Q4-2817	71984	OZ	3	2	REV 7224
SEALING, COMPOUND	-1 LB CAN PLASTISEALF	75165	LB	3	0	REV 8039	
SHEET, METAL	-3FT X 8FT, A 9515006404146	MILS18729	81349	SH	3	0	REV 7275
CONDITION, 0 0320 THK							
SHEET, METAL	-301 COMPOSITION AND 9515005961727	MILS5059	81348	SH	3	0	REV 7275
1/2 HARD TEMPER, 3FT X 10OFT							
SHELLAC, CUT	-TY 2, GR A, ORANGE, 8010001615681	MS35635-1	96906	PT	3	4	REV 7275
1 PT CAN							
SHELLAC, DRY	TTS271	81348	LB				
SHELLAC, DRY	-ASTM D 237, TY1, GRA 8010001416081	ASTM D 237	81346	LB	1	7	REV 7224
1 LB CAN							

Downloaded from http://www.everyspec.com

CONSUMABLE ITEMS PART 2

NOMENCLATURE		P/N	FSCM	UM	EC	SL	ADDITIONALINFO	NSN
SHIELDING GASKET, EL		CHO-SIL1401	18665	EA	3	0	REV 7253	5999010124206
SHIPPING AND STORAGE -	6168-8792	53718	EA					
SHIPPING AND STORAGE -EACH	P069-1	80132	EA	1	0	REV 8039		8145002609556
SHIPPING AND STORAGE -EACH	P069-1	80132	EA	3	0	REV 7219		8145002609556
SHIPPING AND STORAGE -EACH, 5 IN DEEP X 14.2 50 IN WIDE X 20.250 IN LONG, GRAY PLASTIC	8145010124088		P069-6	80132	EA	3	0	REV 7198
SILICONE COMPOUND	-	DC 4	71984	OZ				
SILICONE COMPOUND	-	DC 4 COMPOUND	71984	OZ				
SILICONE COMPOUND	-	G-624	01139	OZ				
SILICONE COMPOUND	-	MIL-S-8660	81349	OZ	1	7	REV 6230	6850008807616
SILICONE COMPOUND	-	MIL-S-8660	81349	OZ	1	7	REV 6230	6850008807616
SILICONE COMPOUND	-	410608-1	96214	OZ	1	7	REV 6230	6850008807616
SILICONE COMPOUND	-	499-066-057	07421	OZ	1	7	REV 6230	6850008807616
SILICONE COMPOUND	-	7400-1810	79318	OZ	1	7	REV 6230	6850008807616
SILICONE COMPOUND	-	801362	19203	OZ	1	7	REV 6230	6850008807616
SILICONE COMPOUND	-	9511C2010	87557	OZ	1	7	REV 6230	6850008807616
SILICONE COMPOUND	-1 PT CAN	MIL-C-47113	81349	PT	3	M	REV 7233	6850001094362
SILICONE COMPOUND	-2 OZ TUBE	MIL-S-8660	81349	OZ	3	7	REV 7273	6850001775094
SILICONE COMPOUND	-8 OZ TUBE	MILS8660-8UNZENTUBE	D2222	OZ	3	7	REV 7273	6850008807616
SILICONE COMPOUND	-8 OZ TUBE	MIL-S-8660	81349	OZ	3	7	REV 7161	6850008807616
SILVER NITRATE SOLU	-80Z BOTTLE 6810002821218		MILW535	81349	OZ	3	0	REV 7271
SKIN PROTECTIVE COM	-TYPE 1,1 LB JAR 6850002444893		PS411TYPE1	81348	LB	3	5	REV 7261
SOAP, LAUNDRY CONSUMABLE FOR	-1 TYPE AND 1 CLASS 7930005798532		P-S-1792	81348	LB	3	0	100 LB DR
							TM 55-1500-204-25/1	

Downloaded from http://www.everyspec.com

CONSUMABLE ITEMS PART 2

NOMENCLATURE		P/N	FSCM	UM	EC	SL	ADDITIONALINFO	NSN
SOAP, SCRUBBING, ALKA	-1 LB CARTON (POWDER)	A-A-44	58536	EA	3	7	REV 7212	7930002312998
SOAP, TOILET GAL CAN	- NONMEDICATED TY1,1	P-S-624	81349	OZ	3	6	REV 8039	8520002280598
SOAP, TOILET 100 PER BOX	-P-S-620 6 OZ CAKE,	P-S-620	81349	EA	3	6	REV 7239	8520005316484
SOAP, TOILET	-TY 2 1 GAL CAN	P-S-624	81348	GL	3	6	REV 7280	8520010587463
SOAP, TOILET	-1 GAL CAN	P-S-624	81348	GL	3	6	1 GL CN CONSLMABLE FOR TM 55-1520-210-23-1	8520002280598
SOAP, TOILET	-5 LB BOX	A-A-50	58536	LB	3	6	REV 7273	8520002280985
SOAP, TOILET	-55 GL DRUM	MS63021-13	96906	GL	3	6	REV 7237	8520001412519
SODIUM BICARBONATE,	-CLASS 1,1 LB BAG	O-S-576	81348	EA	3	0	REV 7257	6810002905574
SODIUM BICARBONATE,	-CLASS 2, 1 LB PACK	O-S-576	81348	LB	3	0	REV 7257	6810002646618
SODIUM BICARBONATE, PACKAGE	OS-576, CL2, 1 LB	O-S-576	81348	LB	3	0	REV 7161	6810002646618
SODIUM CARBONATE, AN	-	2227	72658	EA				
SODIUM CARBONATE, AN	-	3604	70829	EA	1	0	REV 6231	
SODIUM CARBONATE, AN	-	7527	37940	EA				
SODIUM CAPBONATE, AN -I TYPE OR II TYPE OR III TYPE, 25 LB DRUM		O-S-571	81348	LB	3	0	REV 7271	6810002628567
SODIUM CARBONATE, AN-1 LB BOTTLE		0C265	81348	EA	3	0	REV 7211	6810002646593
SODIUM CYANIDE, TECH	-	CYANOBRIK	18873	LB				
SODIUM CYANIDE, TECH	-5 LB BOTTLE	S282	22527	LB	3	0	5 POUND BOTTLE6	810002812039
SODIUM DICHROMATE, D	-5 POUND BOTTLE	O-S-595	81348	LB	3	0	REV 7211	6810002628566
SODIUM HYDROXIDE	-13 OUNCE CAN	MIL-STD-612	96906	OZ	3	5	REV 7217	6810002708177
SODIUM HYDROXIDE, TE	-	A-A-895	58536	LB				
SODIUM HYDROXIDE, TE	-	MIL-STD-612	96906	LB				

Downloaded from http://www.everyspec.com

CONSUMABLE ITEMS PART 2

NOMENCLATURE		P/N	FSCM	UM	EC	SL	ADDITIONALINFO	NSN
SODIUM HYDROXIDE, TE	-	REXHIGHTESTLYE	49309	LB				
SODIUM HYDROXIDE, TE	- REV 7211	O-S-598	81348	LB	3	6		6810002708177
SODIUM PHOSPHATE, MO	-100 LB BAG	MILS13727	81349	LB	3	0	REV 6357, 7257	6810002811858
SODIUM PHOSPHATE, TR	-TYPE 1, 100 LB DRUM	O-S-642	81348	LB	3	6	REV 7253	6810001416080
SOLDER, LEAD-TIN ALL	-0.063 IN., 5 LB SPOOL	QQ-S-571	81348	LB	3	0	REV 7275	3439001418244
SOLDER, LEAD-TIN ALL ROSIN GORE 5 LB ROLL UNIT ISSUE	-63%o SN 47% LEAD	QQS571	81348	LB	1	0	REV 7229	3439000433623
SOLDER, TIN ALLOY	-	QQS-571	81348	LB				
SOLDER, TIN ALLOY RAFLUX TY AND CORE COND AND FLUX PCT P3	-COMP SN60 FORM W	SNS60WRAP30.063 1 LB	81348	LB	3	0	REV 7243	3439002699610
SOLDER, TIN ALLOY	-POUND	SN60WRMAP2 0.036 1 LB	81348	LB	3	0	REV 7219	3439004535472
SOLDER, TIN ALLOY	-1 LB SPOOL	SN60WRP2 0.031 1 LB	81348	LB	3	0	REV 7156	3439005554629
SOLDER, TIN ALLOY	-5 LB SPOOL	QQ-S-571	81348	LB	3	0	REV 7239	3439002243567
SOLVENT, DRY CLEAN	-P-D-680 TYPE 2	P-D-680 TY 2	81348	GL	3	0		6850002858011
SPRAY KIT, SELF PRES 10 PROPE LLANT CANS 4 PRODUCT JARS 20 DIP	-KIT, 6 SPRAY DEVICES	MILS22805	81349	OZ	3	0	REV 7280	DELETED
STANNOUS ETHYLHEXOA 50 LB CAN		NUOCURE 28	99559	LB	3	S	50 LB CN CONSUMABLE FOR TM 55-1520-210-23-1	6810005464853
STENCILBOARD 500W X 18 500L X 0 010-0 012 TH, SHEET	-UU-S-625 TY2 GR3, 18.	UU-S-625	81348	SH	3	0	REV 7161	9310002404737
STIRRING STICK, BEVE EACH 1000 PER PKG	-UNIT OF MEASURE IS	LLL-S-720	81348	EA	1	0	REV 7232	7340007535565
STONE, SHARPENING	-	066M	86297	EA	3	0		5345011032427
STONE, SHARPENING	-	SSS736TYPE2CLASSASTYLE5SIZE5	81348	EA				
STONE, SHARPENING	-	MS13	06565	EA				
STONE, SHARPENING	-	SS-S-736 TY2CLBST	80244	EA				

Downloaded from http://www.everyspec.com

CONSUMABLE ITEMS PART 2

NOMENCLATURE	P/N	FSCM	UM	EC	SL	ADDITIONALINFO	NSN
STONE, SHARPENING -EACH	HS13	06565	EA	3	0	REV 7223	5345005769193
STONE, SHARPENING -FF144, FINE, 4X.5X 5, 1 EACH	5345002475950	FF144	06565	EA	3	0	REV 7157
STONE, SHARPENING -TY2 CL B STYLE 4	5345002436087	SS-S-736	81348	EA	3	0	REV 7280
STONE, SHARPENING -TY 2 CLASS A-2 STYLE 6	5345001446894	SSS736	81348	EA	3	0	REV 7280
STONE, SHARPENING -TYPE 2 & STYLE 6 & WIDE X CLASS A-2,4 IN LG X 1 IN WD.125 TK	5345001446894	SSS736	81348	EA	3	0 125 THICK	0 4 IN LONG X 1 IN
STRAP, TIEDOWN, ELECT -	G203-063-010	88818	EA	1	0	REV 6230	5975009032284
STRAP, TIEDOWN, ELECT -	MS3367-4-0	96906	EA	1	0	REV 6230	5975009032284
STRAP, TIEDOWN, ELECT -	MS3367-4-0	96906	EA	1	0	REV 6230	5975009032284
STRAP, TIEDOWN, ELECT -	SST1M-CO	06383	EA	1	0	REV 6230	5975009032284
STRAP, TIEDOWN, ELECT -	TY23MO	22421	EA	I	0	REV 6230	5975009032284
STRAP, TIEDOWN, ELECT -	TY23MO	59730	EA	1	0	REV 6230	5975009032284
STRAP, TIEDOWN, ELECT -	4049-0015	19397	EA	1	0	REV 6230	5975009032284
STRAP, TIEDOWN, ELECT -	435-0002-010	13499	EA	1	0	REV 6230	5975009032284
STRAP, TIEDOWN, ELECT -	435-1169-010	13499	EA	1	0	REV 6230	5975009032284
STRAP, TIEDOWN, ELECT -	6510568	S4956	EA	1	0	REV 6230	5975009032284
STRAP, TIEDOWN, ELECT - 188 WD, 083 THK, 12 IN LT, BUNDLE OF 100	5975009856630	MS3367-3-0	96906	EA	3	0	REV 7273
STRAP, TIEDOWN, ELECT - 190 WT, 6 IN LT, BLACK, BUNDLE OF 100	5975009846582	MS3367-1-0	96906	EA	3	0	REV 7272
STRAP, TIEDOWN, ELECT -CONFORMS TO MS3367-4-8, 100 PER BUNDLE-I	MS3367-4-8	96906	EA	3	0	REV 7237	5975000824778
STRAP, TIEDOWN, ELECT -PLASTIC POLYMIDE, YEL LOW COLOR, 12 IN BODY LG	5975003688648 -	MS3367-3-4	96906	EA	3	0	REV 7280

Downloaded from http://www.everyspec.com

CONSUMABLE ITEMS PART 2

NOMENCLATURE	P/N	FSCM	UM	EC	SL	ADDITIONALINFO	NSN
STRAP, TIEDOWN, ELECT -PLASTIC, NYLON, COLOR RED, BODY LG 2.72 IN	MS3367-4-2	96906	HD	3	0	REV 7280	5975009032288
STRAP, TIEDOWN, ELECT -PLASTIC, POLYMIDE, BLUE COLOR, 100 PER PACK, BODY LG 6 30 IN	5975009353942	MS3367-1-6	96906HD	3	0	REV 7275	
STRAP, TIEDOWN, ELECT -REV 7243	MS3367-3-9	96906	HD	3	0		5975004515001
STRAP, TIEDOWN, ELECT -REV 7243	MS3367-34-9	96906	HD	3	0		5975007275153
STRAP, TIEDOWN, ELECT -1 HD PER PACK	PLF1M	06383	EA	1	0	REV 7232	5975005874871
STRAP, TIEDOWN, ELECT -100 PER PACK	MS3367-1-9	96906	HD	3	0	REV 7243	5975000742072
STRAP, TIEDOWN, ELECT 100 PER PACK	MS3367-2-0	96906	HD	3	0	REV 7243	5975008994606
STRAP, TIEDOWN, ELECT -100 PER PACK	MS3367-2-9	96906	HD	3	0	REV 7243	5975001563253
STRAP, TIEDOWN, ELECT -100 PER PACK	MS3367-5-9	96906	HD	3	0	REV 7243	5975001113208
STRAP, TIEDOWN, ELECT -100 PER PACK	MS33674-0	96906	HD	3	0	REV 7243	5975010482922
STRAP, TIEDOWN, ELECT -100 PER PACK	MS3367-6-9	96906	HD	3	0	REV 7243	5975001338696
STRAP, TIEDOWN, ELECT -100 PER PACK	MS3367-7-9	96906	HD	3	0	REV 7243	5975005709598
STRAP, TIEDOWN, ELECT -100 PER PACK	MS33681-9A	96906	EA	3	0	REV 7243	5975009441499
STRAP, TIEDOWN, ELECT -100 PER PACK	MS3368-9E	96906	HD	3	0	REV 7243	5975004823954
SULFURIC ACID, TECHN -	MILSTD605	96906	LB				
SULFURIC ACID, TECHN -	A-298	22527	PT				
SULFURIC ACID, TECHN -	MILSTD605	96906	PT				
SULFURICACID, TECHN CL1 TY11, 1 LB EACH	6810002518007	OS809	81348LB	1	0	REV 7225	
SULFURIC ACID, TECHN -1 CLASS AND 1 TYPE CONFORMS TO MILSTD605, 80 OZ BOTTLE	6810002271845	O-S809	81348PT	3	7	REV 6225 REV 7237	

Downloaded from http://www.everyspec.com

CONSUMABLE ITEMS PART 2

NOMENCLATURE	P/N	FSCM	UM	EC	SL	ADDITIONALINFO	NSN
SYRINGE, HYPODERMIC USE	-FOR GENERAL PURPOSE	GGS921TYPE1SIZE1	81348	EA	3 0		6515005142395
SYRINGE, HYPODERMIC SIZE 5, 100 PER PACKAGE	-MILS36157TYP1 AND MILS36157	81349	EA	3	0	REV 7239	6515007540412
TACK CLOTH	-1008 SH PER PG 4940011989333	GOLD STANDARD 20/12 CUT BULK	57687	SH	3		0 REV 7274
TAG, SHIPPING 0 006 THK, 5 812 LONG, METAL EYELET	-WHITE, 2 813 WIDE, 8135002922345	A-A-1266	58536	EA	3	0	REV 7274
TALC, TECHNICAL FREE, 5 LB CONTAINER	-TY T1, ASBESTOS 6810010809589	MIL-T-50036	81349	LB	3	0	REV 7275
TALCUM POWDER	- A-A-42A	58536	EA				
TALCUM POWDER	-8 OZ BOTTLE 8510008170295	U-T-30	81348	EA	3	7	REV 7156
TAPE INSULATION 1/2 IN WIDE, 108 FT ROLL	-ELECTRICAL, TY 1,	MIL-I-23594	81349	FT	3	5	REV 7275
TAPE PRESSURE SENAT AND 2 IN WIDE	-TYPE 2, 60 YD ROLL	MIL-T-22085	81349	YD	3	4	REV 7257
TAPE, PRESSURE SENA AND 4 IN WIDE	-TYPE 2, 36 YD ROLL	MIL-T-22085	81349	YD	3	6	REV 7257
TAPE, PRESSURE SENT AND 3 IN WIDE	-TYPE 2, 50 YD ROLL	MIL-T-22085	81349	YD	3	4	REV 7257
TAPE, ANTISEIZING ON A SPOOL	-SIZE 2,260 IN LONG 8030008893535	MIL-T-27730	81349	IN	3	7	REV 7261
TAPE, DUCT	C-519	07124	YD				
TAPE, DUCT	222	80769	YD				
TAPE, DUCT	1791 K7	39428	YD	0			5640001032254
TAPE, DUCT	- 5812	88301	YD				
TAPE, DUCT	-1791K7 2 INCH WIDE 5640001032254	1791K7	39428	YD	3	0	51 INCHES ROLL

Downloaded from http://www.everyspec.com

CONSUMABLE ITEMS PART 2

NOMENCLATURE	P/N	FSCM	UM	EC	SL	ADDITIONALINFO	NSN
TAPE, IDENTIFICATION	-PNEUMATIC SYS ENG	HS184-1710	02731	IN	7	0	MAKE APPENDIX
BLEED COLOR ORANGE & BLUE MIL-T-9906	7510012129652						
TAPE, IDENTIFICATION	-TAPE FUEL DRAIN	HS18443	02731	IN	7	0	MAKE APPENDIX
COLOR RED MIL-T-9906	7510012129642						
TAPE, IDENTIFICATION	-TAPE HYD SYS CONT	HS184-705	02731	IN	7	0	MAKE APPENDIX
PRESS PRI COLOR BLUE & YELLOW MIL-T-9906	7510012129646						
TAPE, IDENTIFICATION	-TAPE HYD SYS CONT	HS184-706	02731	IN	1	0	MAKE APPENDIX
RTN PRI COLOR BLUE & YELLOW	7510012129647						
TAPE, IDENTIFICATION	-TAPE HYD SYS GSE	HS184-712	02731	IN	7	0	MAKE APPENDIX
RTN UTIL COLOR BLUE & YELLOW MIL-T-9906	7510012129649						
TAPE, IDENTIFICATION	-TAPE HYD SYS GSE PRE	HS184-711	02731	IN	7	0	MAKE APPENDIX
SS UTIL COLOR BLUE & YELLOW MIL-T-9906	7510012129648						
TAPE, IDENTIFICATION	-TAPE HYD SYS PUMP	HS184-702	02731	IN	1	0	MAKE APPENDIX
PRESS PRI COLOR BLUE & YELLOW MIL-T-9906							
TAPE, IDENTIFICATION	TAPE HYD SYS PYLON	HS184-722	02731	IN	1	0	MAKE APPENDIX
PRESS COLOR BLUE & YELLOW MIL-T-9906	7510012129650						
TAPE, IDENTIFICATION	-TAPE HYD SYS PYLON	HS184-723	02731	IN	7	0	MAKE APPENDIX
RTN COLOR BLUE & YELLOW MIL-T-9906	7510012129651						
TAPE, IDENTIFICATION	-TAPE PNEUMATIC SYS	HS184-172	02731	IN	7	0	MAKE APPENDIX
EXH COLOR ORANGE & BLUE MIL-T- 9906	7510012129644						
TAPE, IDENTIFICATION	-TAPE PNEUMATIC SYS	HS184-171	02731	IN	7	0	MAKE APPENDIX
PRESS COLOR ORANGE & BLUE MIL-T-9906	7510012129643						
TAPE, IDENTIFICATION	-TAPE PNEUMATIC SYS	HS184-175	02731	IN	7	0	MAKE APPENDIX
RESERVOIR PRESSURIZATION COLOR ORANGE & BLUE	7510012129645						
TAPE, IDENTIFICATION	1 IN WIDE AND 72 YD	MIL-T-9906	81349	FT	3	0	REV 7253
ROLL	7510002769427						
TAPE, INSULATION	-ELECTRICAL, 1 IN	MIL-1-18746	81349	FT	3	0	REV 7275
WIDE, 108 FT, ROLL							

Downloaded from http://www.everyspec.com

CONSUMABLE ITEMS PART 2

NOMENCLATURE	P/N	FSCM	UM	EC	SL	ADDITIONALINFO	NSN
TAPE, INSULATION	-TY1, 1 IN WIDE X 108	MIL-I-23594	81349	FT	3	5	REV 7280
FT LONG ROLL							
TAPE, INSULATION	-1 IN WIDE X 108 FT	MIL-1-18746	81349	FT	3	6	REV 7280
LONG ROLL							
TAPE, INSULATION ELE	- 604-1	07099	FT				
TAPE, INSULATION ELE	-36 FOOT ROLL	MIL-1-46852	81349	FT	3	5	REV 7217
	5970009559976						
TAPE, INSULATION, ELE	- MS70T09-S	07099	FT	1	5	REV 6231	5970009559976
TAPE, INSULATION, ELE	- 4529670544	03890	FT	1	5	REV 6231	5970009559976
TAPE, INSULATION, ELE	-BLACK COLOR	4529670544	03890	FT	1	5	REV 6231, 6302
	5970009559976						
BASIC, GREEN COLOR SYMBOL							
TAPE, INSULATION, ELE	-MIL-I-24391 3/4 IN	MIL-I-24391	81349	FT	3	6	REV 6357,7239
	5970004194291						
WIDE AND 1296 IN LONG							
TAPE, INSULATION, ELE	-ROLL, FOR WRAPPING	MIL-1-15126	81349	RO	1	6	REV 7232
	5970001379501						
ELEC WIRES FOR NIGHT VISION GOGGLES							
TAPE, INSULATION, ELE	-36 FT ROLL	MIL-I-46852	81349	FT	3	5	REV 7257
	5970009494846						
TAPE, INSULATION, ELE	-60 YD LONG X 3/4 IN	MIL-I-24391	81349	YD	3	6	60 YD LONG X 0 750 IN
WIDE	5970004194291						
WIDE ROLL						RO CONSUMABLE FOR TM 55-1520-21-23-1	
TAPE, LACING AND TYI -	15 NOF 9W 00768		YD	1	0	REV 7218	4020011006823
TAPE, LACING AND TYI	15 NOF 9W	00768	YD				
TAPE, LACING AND TYI	-MIL-T-43435	MIL-T43435	81349	YD	3	0	REV 7162
	4020008237211						
TY2, FINISH C, SZ 5, 250 YARD SPOOL							
TAPE, LACING AND TYI	-MIL-T-43435 TY5	MIL-T-43435	81349	YD	3	0	REV 7161
	4020007536329						
FINISH B SIZE 1,250 YARD SPOOL							
TAPE, LACING AND TYI	-MILT43455TY1,FINISH B,	MIL-T43455	81349	YD	3	0	REV 7162
	4020007536555						
SZ3,500 YARD SPOOL							
TAPE, PRESSURE SENSI	A-A-113	58536	YD				

Downloaded from http://www.everyspec.com

CONSUMABLE ITEMS PART 2

NOMENCLATURE	P/N	FSCM	UM	EC	SL	ADDITIONALINFO	NSN
TAPE, PRESSURE SENSI -	PPP-T42	81348	YD				
TAPE, PRESSURE SENSI -	UUT106	81348	YD				
TAPE, PRESSURE SENSI -	PPP-T42TY21INWD	81348	YD	1	4	REV 6230	7510002830612
TAPE, PRESSURE SENSI -	828305	19203	YD	1	4	REV 6230	7510002830612
TAPE, PRESSURE SENSI -	8790710	19203	YD	1	4	REV 6230	7510002830612
TAPE, PRESSURE SENSI -	A-A-83	58536	RO				
TAPE, PRESSURE SENSI -	8783476	19203	IN	1	4	REV 6231	7510002666712
TAPE, PRESSURE SENSI	- PPP-T-60	81348	IN				
TAPE, PRESSURE SENSI	- 0120 THK, 18 YD 7510011576920	5423	34357YD		3	0	REV 7273
LT, BOX OF 18 RL							
TAPE, PRESSURE SENSI	- 062 WIDE AND 1296 7510000797604	4516	52152Q		YD	1	0
IN LONG PER ROLL, BLACK							
TAPE, PRESSURE SENSI	-A-A-113 YELLOW 7510005507125	A-A-113	58536YD		3	4	2592 IN LONG AND 3 IN
WIDE							
OVERALL							
TAPE, PRESSURE SENSI	-COLOR WHITE, 1 IN WD 7510010712828	4416 1 IN 36 YD WHITE	52152YD		3	0	REV 7273
ROLL							
TAPE, PRESSURE SENSI -	COLOR-YELLOW, 72 YD 7510005507125	A-A-113	58536YD		3	4	72 YD LONG X 0 500 IN
WIDE							
LONG X 1/2 IN WIDE ROLL						RO	
TAPE, PRESSURE SENSI	-MIL-T-21595, TY1, 2 7510006802395	MIL-T-21595	81349IN		3	4	2160 INCHES ROLL
IN WD GREEN							
TAPE, PRESSURE SENSI	-MIL-T-23142 1 IN 7510004724021	MIL-T-23142	81349YD		3	4	REV 8035
WIDE AND 2592							
TAPE, PRESSURE SENSI	-MILT23397TYPE2 7510004739513	MILT23397	81349IN		3	7	REV 7161
21N WIDE, 2160 INCH ROLL							
TAPE, PRESSURE SENSI	-PPP-T-0097TY2CLB,1 7510005824772	PPP-T-0097 TY2CLB	80244EA		3	6	REV 7156
IN WIDE, 2160 IN ROLL							

Downloaded from http://www.everyspec.com

CONSUMABLE ITEMS PART 2

NOMENCLATURE	P/N	FSCM	UM	EC	SL	ADDITIONALINFO	NSN
TAPE, PRESSURE SENSI	-PPP-T-42 TYPE 7510002830612	PPP-T-42TY21INWD	81348	YD	3	4	REV 7161
2,1 IN WIDE, 2160 INCH ROLL							
TAPE, PRESSURE SENSI	-PPP-T42,TY2,2160 7510002830612	8790710	19203	IN	3	7	REV 7161
INCH ROLL							
TAPE, PRESSURE SENSI	-TY 2, 2 IN WD X 7510002902026	A-A-883	58536	YD	3	4	REV 7351
2160 IN ROLL							
TAPE, PRESSURE SENSI	-TYPE 1 & CLASS 7510005045639	L-T-90	81348	IN	3	0	2592 IN LONG X 0.250
WIDE							
B, 2592 IN LONG X 1/4 IN WIDE ROLL					RO		
TAPE, PRESSURE SENSI	-TYPE 1 & CLASS B 7510008351247	A-A-113	58536	YD	3	0	60 YD LONG X 0 750 IN
WIDE							
WHITE, 60 YD LONG X 3/4 IN WIDE ROLL					RO		
TAPE, PRESSURE SENSI	-TYPE 1 AND GREEN 7510006854963	MIL-T-21595	81349	YD	3	4	REV 6232, 7257
60 YD LONG AND 1 IN WIDE ROLL							
TAPE, PRESSURE SENSI	-TYPE 1 AND OPAGUE, 7510006802450	MIL-T-21595	81349	YD	3	4	REV 6224, 7257
60 YD LONG AND 0 500 WIDE ROLL							
TAPE, PRESSURE SENSI	-TYPE 1 AND OPAQUE, 7510006802471	MIL-T-21595	81349	YD	3	4	REV 7257
60 YD ROLL							
TAPE, PRESSURE SENSI	-TYPE 1, 2160 IN 7510002666709	A-A-883	58536	YD	3	4	REV 7351
LONG AND 1 500 IN WIDE ROLL							
TAPE, PRESSURE SENSI	-TYPE 2, 60 YD LONG X 7510002902026	A-A-833	58536	YD	3	4	60 YD LONG X 2 IN
WIDE RO							
2 IN WIDE ROLL						CONSUMABLE FOR TM 55-1520-210-23-1	
TAPE, PRESSURE SENSI	-TY1 AND CLB, 0.500 7510006343267	A-A-113	58536	YD	3	7	REV 7280
IN WIDE X 72 YD LONG, BLUE COLOR							
TAPE, PRESSURE SENSI	-TY1 AND CL2, BLACK 7510008807351	A-A-1689	58536	EA	3	7	REV 7280
COLOR, 2 IN WIDE X 108 FT LONG ROLL							
TAPE, PRESSURE SENSI	-TY1, 0.500 IN WIDE X 7510001053092	L-T-100	81348	YD	3	0	REV 7280
72 YD LONG ROLL							
TAPE, PRESSURE SENSI	-UU-T-91 TYPE 1 7510006341549	UU-T-91	81348	YD	3	0	REV 7239
1296 IN LONG AND 1 IN WIDE							
TAPE, PRESSURE SENSI	-0 500 IN WIDE X 72 7510005507129	A-A-113	58536	YD	3	4	REV 7280
YD LONG, COLOR ORANGE							

Downloaded from http://www.everyspec.com

CONSUMABLE ITEMS PART 2

NOMENCLATURE	P/N	FSCM	UM	EC	SL	ADDITIONALINFO	NSN
TAPE, PRESSURE SENSI	-0 500 IN WIDE X 72	A-A-113	58536	YD	3	4	REV 7349
YD LONG, WHITE COLOR	7510005507127						
TAPE, PRESSURE SENSI	-1 IN WD X 1296 IN	471 CLEAR 1 IN	26066	YD	3	0	REV 7280
LONG ROLL CLEAR COLOR	7510005152856t						
TAPE, PRESSURE SENSI	-1 IN WIDE X 60 YD	A-A-113	58536	YD	3		4 REV 7280
LONG ROLL	7510007207516						
TAPE, PRESSURE SENSI	-1/2 IN WD X 2592 IN	A-A-113	58536	YD	3		4 REV 7349
LONG ROLL COLOR YELLOW	7510005507125						
TAPE, PRESSURE SENSI	-1/8 IN 3 18MM 36	4308	52152	YD	1	7	REV 7243
YDS PER U/I CHARCOAL GRAY	7510001487275						
TAPE, PRESSURESENSI	-1 N WIDEX100FT	P-306	99742	FT	3	0	REV 7280
LONG ROLL, NATURAL COLOR	7510010098023						
TAPE, PRESSURE SENSI	-1296 IN LONG AND 4	5490	26066	YD	3		4 REV 7240
IN WIDE ROLL	7510009230591						
TAPE, PRESSURE SENSI	-2 IN WIDE X 180 YD	PPP-T-60	81348	YD	3	4	REV 7280
LONG ROLL, GREEN COLOR	7510000745124						
TAPE, PRESSURE SENSI	-2 IN WIDE X 60 YD	MIL-T-4053	81349	YD	3	4	REV 7280
LONG	7510005150319						
TAPE, PRESSURE SENSI	-2MILTHICKALUMOIM	X1170	20999	EA	3		7 REV 7280
WITH PRESSURE SENSITIVE ADHESIVE ON	7510004216449						
TAPE, PRESSURE SENSI	-2.5 IN WIDE OD ROLL	PPP-T-60	81348	IN	3	4	REV 7232
TAPE. PRESSURE SENSI	7510000797905 -2160 IN LONG AND	UU-T-106	81348	EA	3	0	REV 63578
1/2 IN WIDE	7510010264661						
TAPE, PRESSURE SENSI	-2160 IN LONG AND 2	A-A-883	58536	YD	3	4	REV 7351
IN WIDE ROLL	7510002666710						
TAPE, PRESSURE SENSI	-2160 IN LONG AND 2	A-A-884	58536	YD	3	4	REV 7243
IN WIDE ROLL	7510000797906						
TAPE, PRESSURE SENSI	-2160 IN LONG AND 3	A-A433	58536	YD	3	4	REV 7350
IN WIDE ROLL	7510002666707						

Downloaded from http://www.everyspec.com

CONSUMABLE ITEMS PART 2

NOMENCLATURE	P/N	FSCM	UM	EC	SL	ADDITIONALINFO	NSN
TAPE, PRESSURE SENSI	-2160 INCH ROLL	8783476	19203	IN	3	4	REV 7198
	7510002666712						
TAPE, PRESSURE SENSI	-2160 INCHES ROLL	13213E5171-285	97403	IN	3	0	REV 7223
	7510010645172						
TAPE, PRESSURE SENSI	-3 IN DIA, 1 IN WD,	A-A-883	58536	YD	3	4	REV 7273
	7510002666712						
60 YD RL, CLEAR							
TAPE, PRESSURE SENSI	-3 IN WD 60 IN LG	A-A-1830	58536		IN	3	6 3 IN WD 60 IN LG
NATURAL	7510002812700						
NATURAL COLOR						COLOR TM 55-1500-345-23	
TAPE, PRESSURE SENSI	-3/4 IN WD 1296 IN	Y9132B	52152	YD	3	4	REV 7280
	7510008782052						
LONG ROLL COLOR BLACK							
TAPE, PRESSURE SENSI	-36 YD LONG X 1 IN	473	26066	YD	3	0	36 YD LONG X 1 IN WIDE
	7510005152856						
WIDE ROLL						RO CONSUMABLE FOR TM 55-1520-210-23-1	
TAPE, PRESSURE SENSI	-36 YD LONG X 3/4 IN	Y9132B	52152	YD	3	4	36 YD LONG & 0.075 IN
WIDE RO	7510008782052						
WIDE ROLL						CONSUMABLE FOR TM 55-1520-21-23-1	
TAPE, PRESSURE SENSI	-36 YD LONG X 5 IN	Y9265A	52152	YD	3	7	36 YD LONG & 5 IN WIDE
RO	7510001450171						
WIDE ROLL						CONSUAMBLE FOR TM 55-1520-210-23-1	
TAPE, PRESSURE SENSI	-4116, 3/4 IN WIDE	4116	52152	IN	3	7	REV 7239
	7510009489543						
AND 2592 IN LONG							
TAPE, PRESSURE SENSI	-5 IN WD X 2592 IN	A-A-113	58536		YD	3	4 REV 7349
	7510005507126						
ROLL COLOR RED							
TAPE, PRESSURE SENSI	-5 IN WD X 36 IN	Y9265A	52152	YD	3	7	REV 7280
	7510001450171						
LONG ROLL							
TAPE, PRESSURE SENSI	-60 YD LONG X 1 IN	A-A-884	58536	YD	3	4	60 YD LONG & 1 IN WIDE
RO	7510011467767						
WIDE ROLL						CONSUMABLE FOR TM 55-1520-210-23-1	
TAPE, PRESSURE SENSI	-72 YD LONG X 1 IN	A-A-113	58536		YD	3	2 72 YD LONG X 1 IN
WIDE RO	7510005519823						
WIDE ROLL, COLOR CLEAR						CONSUMABLE FOR TM 55-1520-210-23-1	
TAPE, PRESSURE SENSI	-72 YD ROLL	A-A-113	58536	YD	3	4	REV 7243
	7510005519826						
TAPE, PRESSURE SENT	-TYPE 2, 60 YD ROLL	MIL-T-22085	81349	YD	3	4	REV 7257
AND 1 INCH WIDE							
TAPE, PRESSURE, SENSI	-OPAQUE, 1 INCH	A-A-833	58536	YD	3	4	REV 7273
WIDE, 60 YARD ROLL							
TAPE, REFLECTIVE	-TYPE 2 & CLASS 1	L-S-300	81348	YD	3	0	50 YD LONG X 0 500 IN
WIDE RO	9390001062467						
RED, 50 YD LONG X 1/2 IN WIDE ROLL							

Downloaded from http://www.everyspec.com

CONSUMABLE ITEMS PART 2

NOMENCLATURE	P/N	FSCM	UM	EC	SL	ADDITIONALINFO	NSN
TAPE, REFLECTIVE	-TYPE 2 & CLASS 1	L-S-300	81348	YD	3	0	50 YD LONG X 0 500 IN
WIDE RO	9390001062466						
GREEN, 50 YD LONG X 1/2 IN WIDE ROLL							
TAPE, REFLECTIVE	-TYPE 2 & CLASS 1	LS300	81348	YD	3	0	50 YD LONG X 0 500 IN
	9390001062465						
YELLOW, 50 YD LONG 1/2 IN WIDE ROLL						WIDE RO	
TAPE, REFLECTIVE	-1 IN WIDE X 50 YD	3870	94960	YD	3	0	REV 7280
	9390001655988						
LONG ROLL							
TEMPERATURE INDICAT	-1 TUBE, 188 0 DEG	THERMOLET188	94858	EA	3	0	REV 7238
	6685009380435						
FAHRENHEIT							
TETRACHLOROETHYLENEGRADE B, 5 GALLON		O-T-236	81348	GL	3	0	REV 8036
	6810008191128						
CAN							
TETRACHLOROETHYLENEOT-236 GRB, 5	O-T-236	81348	GL	3	0	REV 7161	6810008191128
GALLON CAN							
THINNER, DOPE AND LA -L COMPOSITION, 1	A-A-857	58536	GL	3	7	REV 7271	8010001605787
GAL CAN							
THINNER, DOPE AND LA -LACQUER, 5 GAL CAN		A-A-857	58536	GL	3	7	REV 7350
	8010001605788						
THINNER, DOPE AND LA	-1 GAL CAN	MIL-T-6096	81349	GL	3	7	REV 7272
	8010001655582						
THINNER, DOPE AND LA	-55 GL DRUM	MS23562-4	96906	GL	3	7	REV 6357, 7257
	8010001605789						
THINNER, DOPE AND LA	-55 GL DRUM	MS35626-4	96906	GL	3	7	REV 7280
	8010001605789						
THINNER, PAINT, MINER	-TT-T-291 TY 1,5 GL	TT-T-291	81348	GL	3	7	REV 7243
	8010005587026						
PAIL							
THINNER, PAINT, MINER	-TY1, 1 GL CAN	TT-T-291	81348	GL	3	7	REV 7280
	8010002422089						
THINNER, SYNTHETIC R	- 020X304	85570	GL	1	5	REV 6230	8010001818080
THINNER, SYNTHETIC R	-1 GALLON CAN	MIL-T-81772	81349	GL	3	5	REV 7161
	8010001818080						
THINNER, SYNTHETIC R	-1 GL CAN S215	73159	GL	3	7	REV 7224	8010001490202
THREAD	-COLOR OLIVE DRAB	V-T-276	81348	YD	3	0	REV 7272
	8310001873920						
66022 SIZE 50, TYPE IA3 6000 YD CONE							
THREAD	-IB3 TY, 4PLY, Z-TWIST,	VT276	81348	OZ	3	0	REV 7273
	8310005301182						
SIZE 16, 66043, COND GLAZED, 16 OZ TUBE							

Downloaded from http://www.everyspec.com

CONSUMABLE ITEMS PART 2

NOMENCLATURE	P/N	FSCM	UM	EC	SL	ADDITIONALINFO	NSN
THREAD	-TY 3A, Z TWIST OLIVE 8310001977695	V-T-276	81348	OZ	3	0	REV 7280
DRAB COLOR ASSN OF US 66022 6000 YDS CON							
THREAD	-TYPE 1 & CLASS A 8310002622772	V-T-295	81348	YD	3	0	2800 YD TU
CONSUMABLE W							
OLIVE DRAB #66022, 2800 YD TUBE						FOR TM 55-1520-210-23-1	
THREAD	-V-T-295 TY I CL A, 8310002043749	V-T-295	81348	YD	3	0	REV 7243
SIZE 6, 2520 YARDS LONG							
THREAD	-V-T-276 TY IB3, 8310005301182	VT276	81348	YD	3	0	REV 6357, 7243
SIZE 16, TUBE							
THREAD	-V-T-295 TYPE 1 AND 8310002271244	V-T-295	81348	YD	3	0	REV 7237
CLASS A, 1362.5 YARDS LONG							
TOLUENE-METHYL ISOB	-5 GAL CAN MIL-T-19588	81349	GL	3	0	REV 8035	6810002860458
TOLUENE, TECHNICA	- 809850	19203	GL	3	7	REV 6232	6810002900048
TOLUENE, TECHNICA	-5 GL CAN TT--548	81348	GL	3	7	REV 7253	6810002900048
TOLUENE, TECHNICAL	-1 GAL CAN TTT548	81348	GL	3	7	REV 7280	6810002812002
TOLUENE, TECHNICAL	-1 GL CAN TTT548	81348	GL	3	7	REV 7253	6810002812002
TOLUENE, TECHNICAL	-1 GL CAN LIQUID 6810002812002	TTT548	81348	GL	3	7	REV 7280
TOLUENE, TECHNICAL	-32 OZ CAN TTT548	81348	OZ	3	7	REV 7243	6810005798431
TOWEL, MACHINERY WIP -DDDT541 16 5 IN W	DDDT541	81348	EA	3	0	REV 7243	7920002601279
18 IN LG COTTON, 50 PER BOX							
TOWEL. PAPER	-TYPE 6 100 SH PER 7920008239772	UU-T-595	81348	SH	3	0	REV 7218
BOX							
TRICHLOROETHYLENE,T	-REV 7229 O-T-34	81348	GL	1	0	1 GL CAN	6810006784418
TRICHLOROETHYLENE, T	-TYPE 2, 55 GAL DRUM	O-T-634	81348	GL	3	0	55 GL DR CONSUMABLE
FOR	6810001844800						
						TM 55-1520-210-23-1	
TRICHLOROETHYLENE, T	-55 GL DRUM 6810008129181	MILT27602	81349	GL	3	7	REV 7254
TUBING NONMETALLIC	-2 TYPE AND AGRADE 8135007827464	LP378	81348	YD	3	0	REV 7271
AND 1 CLASS AND 1 FINISH, 375 YD RO							
TURBINE FUEL, AVIATI	-GRADE JP-4. GALLON 9130002568613	MILT5624	81349	GL	3	0	REV 6225 REV 7219

Downloaded from http://www.everyspec.com

CONSUMABLE ITEMS PART 2

NOMENCLATURE	P/N	FSCM	UM	EC	SL	ADDITIONALINFO	NSN
TWINE, FIBROUS	-N TYPE AND CL1, 900 4020002471737	MILT713	81349	LB	3	0	REV 7280
FTTUBE							
TWINE, FIBROUS	-TY P CL 2 2250 FT 4020002021924	MIL-T-713	81349	LB	3	0	REV 7280
SPOOL POLYAMIDE NYLON							
TWINE, FIBROUS	-TYPE PWAXED & CLASS 4020002021924	MILT713	81348	LB	3	0	SP 0 5 LB CONSUMABLE
FOR							
2						TM 55-1520-210-23-1	
T700-GE-701	- 6044T06G01	99207	EA	1	0		
UH-1H	- UH1H	97499	EA	3	0		
UH-60A	- UH-60A	78286	EA	1	0		
U21A	-MODEL RECORD FOR	U21A	81996	EA	A	0	
U-21A CONSUMABLE							
VARNISH, ASPHALT	-BLACK, 5 GAL PAIL 8010001605856	A-A-1632	58536	GL	3	6	5 GAL PAIL TM 55-1500-
345-23							
VARNISH, OIL	- TT-V-119	81348	GL	3	6	1 GL CAN	8010005977856
VARNISH, OIL	-COMPOSITION 2, 1 QT 8010001806343	MIL-V-173	81349	QT	3	4	REV 7257
CAN							
VARNISH, OIL	-1 GL CAN TT-V-119	81348	GL	3	6	REV 7275	8010005977856
VARNISH, OIL	-1 QTCAN MS35636-1	96906	QT	3	6	1 QT CN CONSUMABLE FOR TM 55-1520-210-23-1	8010002212809
VARNISH, OIL	-1 OT CAN MS35636-1	96906	OT	3	6	REV 8036	8010002212809
WALKWAY COMP, NO	-TY 2 BRUSH BLACK 5610006410427	MIL-W-5044	81349	GL	3	4	1 GAL CAN TM 55-1500-
345-23							
#37038, 1 GAL CAN							
WALKWAY COMP, NO	-1 GALLON CAN 5610006410427	MIL-W-5044 TY2	80244	GL	3	4	REV 7161
WAX, PARAFFIN, TECHNI	-GRATY1, 1 LB CAKE 9160002852044	VVW95	81348	LB	3	7	1 LB CAKE TM 55-1500-
34523							
WAX, PARAFFIN, TECHNI	-W-W-95, TY1, GR 9160002852048	W-W-95	81348	LB	3	7	REV 7212
C, POUND							
WAX, PARAFFIN, TECHNI	-VV-W-95, TY1, GRAA, 11 9160002852047	VVW95	81348	LB	3	7	REV 7157
LB CAKE							
WIRE, NONELECTRICAL	- QQW461	81348	LB				

Downloaded from http://www.everyspec.com

CONSUMABLE ITEMS PART 2

NOMENCLATURE		P/N	FSCM	UM	EC	SL	ADDITIONALINFO	NSN
WIRE, NONELECTRICAL	-	90001-32C	00624	LB	1	0		9505002934208
WIRE, NONELECTRICAL	-	MS20995C32	96906	LB				
WIRE, NONELECTRICAL	-	90001 032C	00624	LB	1	0		9505002934208
WIRE, NONELECTRICAL	-	900010-32C	00624	LB	1	0		9505002934208
WIRE, NONELECTRICAL	-	QQW423	81348	LB				
WIRE, NONELECTRICAL	-	QQW423	81348	LB				
WIRE, NOINELECTRICAL -		AN995C20	88044	LB	1	0		9505002212650
WIRE, NONELECTRICAL -		QQW423COMPOSITION FS302-304OR316	81348	LB				
WIRE, NONELECTRICAL	-	57761	73030	LB	1	0	REV 6301	9505002212650
WIRE, NONELECTRICAL	-	MS20995CU20	96906	LB				
WIRE, NONELECTRICAL	-	MS20995NC32	96906	LB	1	0		9525003556072
WIRE, NONELECTRICAL	-	AN995C41	88044	FT	1	0	REV 6231	9505003313275
WIRE, NONELECTRICAL	-	QQW423	81348	FT				
WIRE, NONELECTRICAL	-	QQN281	81348	FT	3	0	REV 6232, 7243	9525004091866
WIRE, NONELECTRICAL	-	MS20995F47	96906	FT	3	0	REV 6232, 7243	9505002489850
WIRE, NONELECTRICAL	-ANNEALED, FORM 1,	9505003313275	AN995C41	88044	LB	3	0	REV 7275
COMP 302 OR 304, COND A, 041 DIA, 1 LB ROLL								
WIRE, NONELECTRICAL	-CLASS A, FORM 7	9525005299196	MS20995NC51	96906		LB	3	0 REV 7273
0 051 DIA 1 LB. PER RL								
WIRE, NONELECTRICAL	-DIA.020,831 FT	9525006180257	MS2099NC20	96906	FT	3	0	REV 7273
PER SPOOL								
WIRE, NONELECTRICAL	-DIA 020, 1 LB PER	9505002212650	MS20995C20	96906	LB	3	0	REV 7273
ROLL								
WIRE, NONELECTRICAL	-DIA 032, CLASS		QQN281	81348	LB	3	0	
A, FORM 7, 51 LB PER SL								

Downloaded from http://www.everyspec.com

CONSUMABLE ITEMS PART 2

NOMENCLATURE	P/N	FSCM	UM	EC	SL	ADDITIONALINFO	NSN
WIRE, NONELECTRICAL	-DIA 0020, 831 FT	MS2099NC20	96906	PT	3	0	REV 8036
	9525006180257						
ROLL							
WIRE, NONELECTRICAL	-FORM 1,302 OR 304	MS20995C20	96906	LB	3		0 REV 7273
	9505002212650						
OR 306 TEMP, COND A, 0 020 DIA 5 LB ROLL							
WIRE, NONELECTRICAL	-MS9226-03 STEEL ANS	MS9226-03	96906	LB	3	0	REV 6357, 7239
	9505008782958						
5687, 558 FOOT SPOOL							
WIRE, NONELECTRICAL	-MS9226-04STEEL	MS9226-04	96906	LB	3	0	REV 6357, 7239
	9505009953177						
AMS 5687, 3410 FOOT SPOOL							
WIRE, NONELECTRICAL	-NICKEL QQ-N-281	MS20995NC47	96906	LB	3		0 REV 7243
	9525004091866						
CLASS A FORM 7 ANNEALED							
WIRE, NONELECTRICAL	-NICKEL OQ-N-281 CL	QQN281	81348	LB	3	0	REV 8039
	9525008033044						
A 032 DIA FORM 7 CONDITION ANNEALED							
WIRE, NONELECTRICAL	- QQW423 302	QQW423	81348	LB	1	0	REV 7239
	9505005965101						
COMPOSITION AND A CONDITION, 5 LB SPOOL							
WIRE, NONELECTRICAL	-STEEL QQ-W-461 COMP	MS20995F47	96906	LB	3	0	REV 8036
	9505002489850						
1O10 FINISH 5 CLASS 1 DIA 048							
WIRE, NONELECTRICAL	-WEIGHT 1 LB PER	MS20995NC40	96906	LB	3	0	REV 7243
	9525009907799						
PIECE PER UNIT MEASURE							
WIRE, NONELECTRICAL	-1 LB ROLL MS20995CY20	96906	LB	1	0	REV 7156	9525010476455
WIRE, NONELECTRICAL	-1 LB ROLL MS20995NC32	96906	LB	3	0	REV 7156	9525003556072
WIRE, NONELECTRICAL	-1 LB ROLL, 1 FORM &	MS20995C41	96906	FT	3	0	REV 7198
	9505003313275						
A COMPOSITION, SIZE 0 041							
WIRE, NONELECTRICAL	-1 POUND ROOL, SIZE	MS20995AB32	96906	LB	3	0	REV 7198
	9525010311086						
0 032							
WIRE, NONELECTRICAL	-1422 FOOT SPOOL	MS9226-01	96906	LB	3	0	REV 6357, 7239
	9505008659694						
WIRE, NONELECTRICAL	-189 FT ROLL	MS20995C47	96906	LB	3	0	189 FOOT ROLL
	9505005558648						
WIRE, NONELECTRICAL	-366 FT ROLL	QQW390	81348	LB	3	0	REV 6204, REV 7156
	9525005290442						
WIRE, NONELECTRICAL	-366 FT ROLL	900010-32C	00624	LB	3	0	366 FOOT ROLL
	9505002934208						
WIRE, NONELECTRICAL	-37.300 FT ROLL	MS20995F20	96906	LB	3	0	REV 7156
	9505000873956						

Downloaded from http://www.everyspec.com

CONSUMABLE ITEMS PART 2

NOMENCLATURE		P/N	FSCM	UM	EC	SL	ADDITIONALINFO	NSN
WIRE, NONELECTRICAL	-935 FT ROLL	MS20995C20	96906	LB	3	0	REV 8036	9505002212650
WIRE, NONELECTRICAL	-STD 3 USE QQW390	MS20995N32	96906	RO				
WOOL, METALLIC FORM B, LB	-A-A-1044 TY1 CL3	A-A-1044	81348	LB	3	0	REV 7161	5350011968371
WOOL, METALLIC FORM B, LB	-FF-W-1825 TY4 CL4	A-A-1043	58536	LB	3	0	REV 7165	3500024244061
WOOL, METALLIC	-SIZE OO, 1 LB ROLL	A-A-1043	58536	LB	3	0	REV 7275	5350002402920
WOOL, METALLIC	-TYPE 2, 1 POUND ROLL	A-A-1044	58536	LB	3	0	REV 7345	5350002864851
XYLENE, TECHNICA	-	809847	19203	GL	1	7	REV 6231	6810005844070
XYLENE, TECHNICA	-5 GAL CAN	D 846	81346	GL	3	7	5 GAL CAN TM 55-1500345-23	6810005844070
XYLENE, TECHNICA	-	TT-X-916	81348	GL				
XYLENE, TECHNICAL	-1 GAL CAN	D 846	81346	GL	3	7	REV 7280	6810005986600
	DELETED							
	DELETED							
	DELETED							
	DELETED							
	DELETED							
	DELETED							
	DELETED							
	DELETED							
INK, MARKING, PARACHU 16 OZ BOTTLE	-TYPE 1 COLOR-BLUE,	MIL16903	81349	OZ	3	0	REV 7271	7 510001449672
	DELETED							

Downloaded from http://www.everyspec.com

Downloaded from http://www.everyspec.com

APPENDIX A
REFERENCES

ARMY REGULATIONS (AR):

AR 385-10	Army Safety Program
AR 385-32	Protective Clothing and Equipment
AR 385-40	Accident Reporting and Records

DEPARTMENT OF THE ARMY (DA) FORM.

DA 2028	Recommended Changes to Publications and Blank Forms

MILITARY SPECIFICATIONS:

MIL-H-6088F (1)	Heat Treatment of Aluminum Alloys
MIL-H-6875G	Process for Heat Treatment of Steel

TECHNICAL MANUALS (TM)'

TM 43-0105	Corrosion Control for Army Aircraft
TM 43-0106	Engineering Series for Aircraft Repair Aerospace Metals - General Data and Usage Factors
TM 55-1510-Series	AVUM and AVIM Aircraft Maintenance Manuals for Fixed-Wing Aircraft
TM 55-1520-Senes	AVUM and AVIM Aircraft Maintenance Manuals for Rotary-Wing Aircraft

OTHER (CHERRY FASTENERS)

Cherry Lock	Locked Spindle Rivets and Tools
Cherry Lock	Process Manual
CherryMAX	Locked Spindle Rivets and Tools
CherryMAX	Process Manual
Cherry - Ms	Rivets and Tools
Cherry	Self-Locking Nuts

Downloaded from http://www.everyspec.com

Downloaded from http://www.everyspec.com

GLOSSARY

CHAMFER -	To bevel a sharp external edge
ECCENTRIC HOLE -	An untrue hole which is not completely circular
FLAT END -	Having a continuous horizontal surface without peaks or depressions; having a relatively smooth or even surface.
ROUND/POINT END -	A dome-like rounded surface applied to the end of threaded members.

Downloaded from http://www.everyspec.com

Downloaded from http://www.everyspec.com

INDEX

Subject	Paragraph, Figure, Table Number
A	
Acrylic Monomer and Polymer Base Adhesive, MIL-A-8576, Type II, Non-Solvent	6-2c
Acrylic Monomer and Polymer Base Adhesive, MIL-A-8576, Type II, Non-Solvent, Shelf Life	T6-3
Acrylic Monomer Base Adhesive, MIL-A-8576, Type I, Solvent Type	6-2b
Acrylic Monomer Base Adhesive, MIL-A-8576, Type I, Solvent Type	T6-1
Adhesive and Cements	6-2
Acrylic Monomer and Polymer Base Adhesive, MIL-A-8576, Type II, Non-Solvent	6-2c
Acrylic Monomer Base Adhesive MIL-A-8576, Type I, Solvent Type	6-2b
Cement Primer	6-21
Cement Types	6-2a
Chemigum Coating Cement	6-2d
Colored Cement	6-2e
Composite Adhesives	6-2m
Deicer Repair Cement	6-2k
Deicer Shoe Electrical Conducting Neoprene Surface Coat Cement	6-2f
General Purpose Synthetic Rubber Base Cement MIL-Spec MMM-A-1617	6-2g
Natural Base Rubber Adhesive, MIL-Spec MMM-A-139, Class 3	6-2i
Neoprene Base Synthetic Rubber Cement	6-2j
Non-Hardening Distic Brand Cement	6-2h
Other Adhesives	6-2n
Adhesives and Cements, Specific Gravity Ranges	T6-2
Adhesives, Sealants, and Cements, General	6-1
Curing	6-1d
Mixing	6-1c
Precautionary Measures	6-1a
Preparation of Surface	6-1b
Adjustable Tension Safety cable Tool	F2-98
Adjustment of Safety Cable Indenter (Same for Hand or Pneumatic Models)	F2-103
Airframe Castle Nuts	F2-22
Airframe Plain Nuts	2-3j, F2-28
Alloys	
Magnesium	4-3
Steel	4-5,T4-11
Titanium	4-4
Aluminum Alloy Designation Conversions (Old to New)	T4-2
Aluminum Alloy Temper Designations	T4-3
Aluminum Alloy Types	T4-6
Aluminum Alloys	4-2
Handling	4-2b
Identification	4-2a
Storage	4-2c
Aluminum Alloys, Designation for Alloy Groups	T4-1
Aluminum Bolts	2-20
Anaerobic Adhesive MIL-R-46082	6-3i
Anchor Nuts, Floating	F2-17
Application Time (Room Temperature), Sealing Compound MIL-S-8802	T6-4

Downloaded from http://www.everyspec.com

INDEX - CONT

Subject	Paragraph, Figure, Table Number
A - Continued	
Assemblies, Channel	F2-19
Authority for Substitutions and Interchangeability of Material (Air Items)	1-3
ATCOM, Responsibilities of	1-5
B	
Blind Rivets	2-8
Bolt and Screw Markings	T2-1
Bolt Diameter by Part Number	T2-2
Bolt, Drilled Head	F2-3
Bolt Head Identification	2-2d
Bolt Hole Location by Letter	T24
Bolt Identification, Hexagon Head	F2-2
Bolt Length by Dash Number	T2-5
Bolt Material by Letter Preceding Dash Number	T2-3
Bolt Substitution, Huck and Hi-Lok	T2-6
Bolt -End Description	F2-1
Bolted Joint with Oversize Hole	F2-13
Bolts	2-2
Aluminum Bolts	2-2n
Bolt Head Identification	.2-2d
Clevis Bolts	2-2j, F2-7
Close Tolerance Bolts	2-2g
Drilled Head Bolts	2-2f
External Wrenching Bolts	2-21, F2-6
Eye Bolts	2-2k, F2-8
Fitting Structural Bolts	2-2q
Hexagon Head Bolts	2-2e
Huck Bolts (Lockbolt)	2-2p
Installation and End Description	2-2b
Internal Wrenching Bolts	2-2h, F2-5
Jo-Bolts	2-20
Locking or Safetying	2-2c
Self-Locking Bolts	2-21, F2-9
Substitutions for Huck, Hi-Lock, and NAS Bolts	2-2r
Substitutions for Jo-Bolts and V-Bolts	2-2s, T2-7
Tee-Head Bolts	2-2m
C	
Cable Jacketing for Protection	F2-94
Calibration Test fixture and Torque wrench	F2-100
Camloc Fasteners	2-9b, F2-61
CastellatedNuts	2-3b
Castle Nut, Airframe	F2-22
Castle Nut, Shear	F2-23

Downloaded from http://www.everyspec.com

INDEX - CONT

Subject	Paragraph, Figure, Table Number
C - Continued	
Cells, Fuel and Oil	3-4
Cement Primer	6-21
Cement Types	6-2a
Cements and Adhesives	6-2
Changes to Department of Army Publications, Recommended	1-6
Channel Assemblies	F2-19
Characteristics of Catalyst Cured Sealants	6-3c
Characteristics of Drying Sealants	6-3b
Characteristics of Pliable Sealants	6-3a
Checknut, Plain	F2-24
Checknuts	2-3c
Chemigum Coating Cement	6-2d
Cherrylock Rivets	F2-56
CherryMAX Rivets	F2-55
Cross Reference (Part Number/Military Standard Part Number, CherryMAX Rivets	T2-11
Clamp Identification	2-6a
Clamp, Loop-Type Bonding	F2-42
Clamp, Loop-Type Support	F2-45
Clamp Types	2-6b
Clamps	2-6
Clamp Identification	2-6a
Clamp Types	2-6b
Clamps, Hose	F2-43
Clamps, Tube	F2-44
Clevis Bolts	2-2k, F2-7
Clevis Pins	2-7a, F2-46
Close Tolerance Bolt, Countersunk	F2-4
Close Tolerance Bolts	2-2g
Coding, Color	T3-1
Color Code (for Aluminum Alloys)	T4-4
Color Coding	T3-1
Colored Cements	6-2e
Common Solid Shank Rivets	2-8a
Composite Adhesives	6-2m
Considerations to be Taken Before Torquing	2-18b
Consumable Items	7-2
Consumable Items List	7-3
Consumable Items Part 1	7-3a
Consumable Items Part 2	7-3b
Consumable Materials	1-7
Cord Identification	3-5a
Cord Inspection	3-5b
Cord Storage	3-5d
Cord Testing	3-5c
Cord, Test Loads	T3-2
Correct Application of Safety Cable	F2-88
Corrosion Resistance (of Rivets)	2-8d
Cotter Pin Installation	2-17a, F2-77
Cotter Pins	2-7g, F2-52

Downloaded from http://www.everyspec.com

INDEX - CONT

Subject	Paragraph, Figure, Table Number
C - Continued	
Countersunk Close Tolerance Bolt	F2-4
Countersunk Washer	F2-34
Cross Reference of Old and New Color Code (for Aluminum Alloys)	T4-5
Cross Reference (Part Number/Military Standard Part Number) CherryMAX Rivets	T2-11
Cure Time (Room Temperature), Sealing Compound MIL-S-8802	T6-4
Curing (of Adhesives, Sealants, and Cements)	6-1d
D	
Deicer Repair Cement	6-21
Deicer Shoe Electrical Conducting Neoprene Surface Coat Cement	6-2f
Description of Bolt-Ends	F2-1
Designation Conversions (Old to New), Aluminum Alloy	T4-2
Designation for (Aluminum) Alloy Groups	T4-1
Diameter by Part Number, Bolt	T2-2
Dill Lok-Skru	2-9c, F2-62
Drilled Head Bolts	2-2f, F2-3
Dzus Fasteners	2-9a, F2-60
E	
Electrical Screws	2-5f
Electronic Safety Cable Pull Tester	F2-101
Engine Self-Locking Nut	F2-20
Example of Color Marking (for Aluminum Alloys)	F4-1
Examples of Final Safety cable Turnbuckle Installation	F2-93
Examples of Installed Safety Cable	F2-90
External Wrenching Bolts	2-2i, F2-6
Eye Bolts	2-21, F2-8
F	
Fastener, Lockring	2-15
Fasteners	2-9
Camloc	2-9b, F2-61
Dill Lok-Skru	2-9c, F2-62
Dzus Fasteners	2-9a, F2-60
Interlocking Slide	2-9e, T2-12
Snap and Curtain	2-9d
Fillister Head Screws	F2-39
Fitting Identification	2-16a
Fitting Structural Bolts	2-2r
Fittings	2-16, T2-18
Fitting Identification	2-16a
Special Fitting Types	2-16b

Downloaded from http://www.everyspec.com

INDEX - CONT

Subject	Paragraph, Figure, Table Number
F - Continued	
Fitting Material Code	T2-17
Fittings, Typical	F2-76
Flat-Head Screws	F2-37
Flat Washer Safety Cable Installation (FW10-1)	F2-83
Flex Limits, Inch (MM)	T2-20
Floating Anchor Nuts	F2-17
Flush Head Jo-Bolt	F2-10
Forming Titanium and Titanium Alloys	4-5a
Fuel and Oil Cells	3-4
Fuel Cell Identifications	3-4a
Fuel Cell Storage	3-4b
Oil Cell Identification	3-4c
Oil Cell Storage	3-4d
Fuel Cell Identification	3-4a
Fuel Cell Storage	3-4b
G	
Gasket and Packing Identification	3-6b
Gasket and Packing Types	3-6a
Gasket and Packings	3-6
Gasket and Packing Identification	3-6b
Gasket and Packing Types	3-6a
Storage	3-6c
General	
Adhesive Sealants, and Cements	6-1
Consumable Materials	7-1
Hardware	2-1
Metals	4-1
Phenolic and Plastic Materials	5-1
Rubber Materials	3-1
General Purpose Synthetic Rubber Base Cement MIL-Spec MMM-A-1617	6-2g
General Usage (of Rivets)	2-8c
Grip Length (for Bolts)	2-2a
H	
Handling of Aluminum Alloys	4-2b
Hardware General	2-1
Heat Treatment of Rivets	2-8f
Helical Insert and Tools Data	T2-15
Helical Insert National Fine Thread Sizes	T2-14
Helical Insert Part Numbers	T2-13
Helical Thread Inserts	2-11
Insert Tolerance	2-11c
Inspection Criteria for Helical Springs	2-11d
Installation of Helical Insert	2-11e

Downloaded from http://www.everyspec.com

INDEX - CONT

Subject	Paragraph, Figure, Table Number
H - Continued	
Installation of Spark Plug Helical Insert	2-11 h
Installation of Twinsert	2-11i
Oversize Insert and Twinsert Kits	2-11 k
Removal of Helical Insert	2-11f
Removal of Twinsert	2-11j
Types	2-11 a
Hexagon Head Bolt Identification	F2-11
Hexagon Head Bolts	2-2e
Hi-Shear Rivets	2-8h, F2-54
High Tensile Washer	F2-33
Hinge Pins	2-7f
Hole Location by Letter, Bolt	T2-4
Hose Clamp	F2-43
Huck and Hi-Lock Bolt Substitution	12-6
Huck Bolts (Lockbolt)	2-2q
Huck Rivet	F2-57
I	
Identification	
of Aluminum Alloys	4-2a
of Hose	F3-1
of Magnesium Alloys	4-3a, T4-7
of Nuts	2-3i
of Phenolic Compositions	5-2a
of Plastic Materials	5-3a, T5-1
of Rubber Materials	T3-3
of Steel	T4-10
of Steel Alloys	4-4a
of Steels, SAE Numbers Used in	T4-8
of Tie Rods	2-13a
of Titanium and Titanium Alloys	4-5c
Insert Tolerance (for Helical Inserts)	2-11c
Inspection Criteria for Helical Springs	2-11d
Inspection of Rubber Materials	3-1b
Inspection of Titanium and Titanium Alloys	4-5b
Installation Data, Spacer	F2-69
Installation of Helical Insert	2-11e
Installation of Spark Plug Helical Insert	2-11 h
Installation of Twinsert	2-11i, F2-66
Installation, Stud	F2-65
Installation, Stud and Grommet	F2-59
Installing New Stud	2-10b
Interlocking Slide Fasteners	2-9e, T2-12
Internal Wrenching Bolts	2-2h, F2-5
Internal Wrenching Nuts	2-3h

Downloaded from http://www.everyspec.com

INDEX - CONT

Subject	Paragraph, Figure, Table Number
J	
Jamnuts	2-3d
Jo-and V-Bolts Substitution	22-2s, T2-7
Jo-Bolts	2-2p
Flush Head	F2-10
Hexagon Head	F2-11
Millable Head	F2-12
Joint with Oversize Hole, Bolted	F2-13
L	
Length by Dash Number, Bolt	T2-5
Length Measurement (of Screws)	2-5b
Light Hexagon Nuts	2-3e, F2-25
Locking of Safetying Bolts	2-2b
Lockpins	2-7e, F2-51
Lockring	F2-74
Lockring Fastener	2-15
Lockring Principle	F2-75
Lockwasher, Split	F2-30
Lockwashers	2-46
Lockwashers, Teeth-Type	F2-31
Lockwire Installation	2-1 7b
Lockwiring Oil Caps, Drain Cocks, and Valves	F2-79
Lockwiring Screws, Nuts, and Bolts	F2-78
Lockwiring, Speed Rig	F2-81
Lockwiring Turnbuckes	2-17f
Loop-Type Bonding Clamp	F2-42
Lock-Type Support Clamp	F2-45
Low profile application for 0.032 and 0.040 Inch safety cable	F2-89
M	
Machine Screws	F2-38
Magnesium Alloys	4-3
Identification	4-3a, T4-7
Storage	4-3c
Testing	4-3b
Maintenance Activities, Responsibility of	1-4
Marking Steel Alloys	4-4b
Marking Titanium Alloys	4-5d
Markings, Bolt and Screw	T2-1
Material, by Letter Preceding Dash Number, Bolt	T2-3
Materials, Consumable	1-7
Materials Used in Fabrication (of Rivets)	7-1
Metals, General	4-1
Millable Hexagon Head Jo-Bolt	F2-12
Minimum Breakaway Torque for Used All-Metallic and Nonmetallic Self-Locking Nuts	T2-8
Mixing (Adhesives, Sealants, and Cements)	6-1c

Downloaded from http://www.everyspec.com

INDEX - CONT

Subject	Paragraph, Figure, Table Number
N	
National Fine Thread Sizes (for Helical Inserts)	T2-14
Natural Rubber Adhesive, MIL-Spec MMM-A-139, Class 3	6-2i
Neoprene Base Synthetic Rubber Cement	6-2j
Non-Hardening Distic Brand Cement	6-2h
Numbenng System, CherryMAX Rivets	T2-10
Nut Installation Limits, Self-Locking	F2-21
Nuts	2-3
Airframe Plain Nuts	2-3j, F2-28
Castellated Nuts	2-3b
Checknuts	2-3c
Identification of Nuts	2-3i
Internal Wrenching Nuts	2-3h
Jamnuts	2-3d
Light Hexagon Nuts	2-3e, F2-25
Self-Locking Nuts	2-3a
Sheet Spring Nuts	2-3g, F2-27
Wingnuts	2-3f, F2-26
O	
Oil Caps, Drain Cocks, and Valves, Lockwiring of	F2-79
Oil Cell Identification	3-4c
Oil Cell Storage	3-4d
Old and New Color Code (for Aluminum Alloys), Cross Reference	T4-5
Other Adhesives	6-2 n
Oversize Insert and Twinsert Kits	2-11 k
P	
Packings, Gaskets and	3-6
Part Number Breakdown, Spacer	F2-68
Part Numbers, Helical Insert	T2-13
Phenolic and Plastic Materials, General	5-1
Phenolic Compositions	5-2
Identification	5-2a
Storage	5-2c
Usage	5-2b
Pin, Threaded Taper	F248
Pins	2-7
Clevis Pins	2-7a, F2-46
Cotter Pins	2-7g, F2-52
Hinge Pins	2-7f
Lockpins	2-7e, F2-51
Safety Retaining Pins	2-7c, F249
Spring Pins	2-7d, F2-50
Taper Pins	2-7b
Pins, Plain Taper	F2-47
Plain Washers	24a, F2-29
Plastic Materials	5-3
Identification	5-3a, T5-1
Storage	5-3c
Types	5-3b

Downloaded from http://www.everyspec.com

INDEX - CONT

Subject	Paragraph, Figure, Table Number
P - Continued	
Plate Nut, Self-Locking	F2-16
Pneumatic Safety cable Application Tool	F2-99
Position of Safety Cable Tool	F2-97
Practices for Installation of Cotter Pins and Lockwire	2-17
Cotter Pin Installation	2-17a, F2-77
Double-Twist Method	2-17c
Lockwire Installation	2-17b
Lockwiring Turnbuckles	2-1 7f
Rod End Safetying (Key Type NAS 559)	2-17h, F2-82
Safetying Emergency Devices	2-17e
Securing Electrical and Electronic Connectors	2-17i
Single-Wire Method	2-17d
Speed Rig Safetying	2-17g
Precautionary Measures (for Adhesives, Sealants, and Cements)	6-1a
Preload Indicating Washers	F2-35
Preparation of Surface (for Adhesives, Sealants, and Cements)	6-1b
Pre-Set Tension Safety Cable Tool	F2-95
Pre-Set Tension Safety Cable Tool	F2-96
Principle of Lockring	F2-75
Purpose (of Manual)	1-1
R	
Recommended Changes to Department of the Army Publications	1-6
Recommended Torque Values	2-18c
Recommended Torque Values, Nut	T2-9
Removal of Bent, Damaged, or Broken Studs	2-10a
Removal of Helical Insert	2-11f
Removal of Safety cable Tool Nose Assembly	F2-102
Removal of Twinsert	2-11j
Removal, Stud	F2-64
Repair of Damaged Spark Plug Threads	2-11g
Responsibilities	
of ATCOM	1-5
of Maintenance Activities	1-4
Rivet, CherryMAX	F2-55
Rivet, Huck	F2-57
Rivets	2-8, F2-53
Blind Rivets	2-8i
Common Solid Shank Rivets	2-8a
Corrosion Resistance	2-8d
General Usage	2-8c
Heat Treatment	2-8f
Hi-Shear Rivets	2-8h, F2-54
Materials Used in Fabrication	2-8b
Rivnuts	2-8j
Strength	2-8e
Rivets, Cherrylock	F2-56
Rivnut Types	F2-58

Downloaded from http://www.everyspec.com

INDEX - CONT

Subject	Paragraph, Figure, Table Number
R - Continued	
Rivnuts	2-8j
Rod End Safetying (Key Type NAS 559)	2-17h, F2-82
Routing of Safety Cable on Turnbuckles	F2-92
Rubber Materials	
General	3-1
Identification	T3-3
Inspection	3-1 b
Storage	3-1 a
S	
SAE Numbers Used in Identification of Steels	T4-8
Safety Cable	2-19
Elongated ferrules	2-19d
Examples	2-19e
General Instructions	2-19e
Identification Stamp	2-419f, F2-91
Installation	2-19c
Jacketing for Protection	2-19h
Size	2-19b
Turnbuckles	2-19g
Safety Cable Application Tools	2-20
Procedures	2-20a
Safety Cable Flex Limits	F2-87
Safety Cable Application Tool Maintenance and Calibration	2-22
Indenter Adjustment for all Safety Cable Application Tool Models	2-22b
Tool Calibration Verification with the Safety Cable Test Fixture on Electronic Pull Tester	2-22a
Safety Cable Minimum Crimp Requirements (Pull-Off Load)	T2-19
Safety cable Tools, Types of	2-21
Adjustable Tension Tool	2-21b
Pneumatic safety Cable Application Tool	2-21c
Pre-Set tension Tool	2-21a
Safety Retaining Pins	2-7c, F2-49
Safetying Emergency Devices	2-17e
Scope (of Manual)	1-2
Screw Heads	2-5a
Screws	2-5
Electrical Screws	2-5f
Length Measurement	2-5b
Machines Screws	2-5d, F2-38
Screw Heads	2-5a
Self-Tapping Screws	2-5e, F2-40
Structural Screws	2-5c, F2-36
Screws, Fillister Head	F2-39
Screws, Flat-Head	F2-37
Screws, Nuts, and Bolts, Lockwiring of	F2-78
Screws, Round-Head Machine	F2-41

Downloaded from http://www.everyspec.com

INDEX - CONT

Subject	Paragraph, Figure, Table Number
S - Continued	
Sealants	6-3
Anaerobic Adhesive MIL-R-46082	6-3i
Characteristics of Catalyst Cured Sealants	6-3c
Characteristics of Drying Sealants	6-3b
Characteristics of Pliable Sealants	6-3a
Sealing Compound, MIL-S-7126	6-3f
Sealing Compound, MIL-S-8784	6-3d
Sealing Compound, MIL-S-8802	6-3e
Semi-Solid Synthetic Rubber Sealant for Engine Firewalls	6-3h
Semi-Solid Synthetic Rubber Sealant, MIL-A-7126, for Hot-Air Ducts	6-3g
Sealing Compound, MIL-S-7126	6-3f
Sealing compound, MIL-S-8784	6-3d
Sealing Compound, MIL-S-8802	6-3e
Application Time (Room Temperature)	T6-4
Cure Time (Room Temperature)	T6-5
Securing Electrical and Electronic Connectors	2-17i
Selection of Helical Inserts	2-11 b
Self-Locking Bolts	2-2m, F2-9
Self-Locking Engine Nut	F2-20
Self-Locking Nut Installation Limits	F2-21
Self-Locking Nuts	2-3a
Self-Locking Plain Nut	F2-15
Self-Locking Plate Nut	F2-16
Self-Locking Thin Nut	F2-14
Self Looping Safety Cable	F2-84
Self Looping Safety Cable Anchored to a Pin Assembly	F2-85
Self Looping Safety cable in High Bend Exit Application	F2-86
Self-Tapping Screws	2-5e, F2-40
Self-Retaining Bolts	2-2j, F2-8A
Semi-Solid Synthetic Rubber Sealant for Engine Firewalls	6-3h
Semi-Solid Rubber Sealant, MIL-A-7126, for Hot-Air Ducts	6-3g
Shear Castle Nut	F2-23
Sheet Spring Nuts	2-3g, F2-27
Shelf Life (of Adhesive, Acrylic Monomer and Polymer Base Adhesive, MIL-A-8576, Type II, Non-Solvent)	T6-3
Shelf Life (of Adhesive, Acrylic Monomer Base Adhesive, MIL-A-8576, Type I, Solvent Type)	T6-1
Shock Absorber and Elastic Exerciser Cords	3-5
Cord Identification	3-5a
Cord Inspection	3-5b
Cord Storage	3-5d
Cord Testing	3-5c
Single-Wire Method	2-17d
Snap and Curtain Fasteners	2-9d
Spacer Identification	2-12a
Spacer Installation	2-12b
Spacer Installation Data	F2-69
Spacer Part Number Breakdown	F2-68
Special Fitting Types	2-16b

Downloaded from http://www.everyspec.com

INDEX - CONT

Subject	Paragraph, Figure, Table Number
S - Continued	
Special Washers	2-4c
Specific Gravity Ranges (for Adhesives and Cements)	T6-2
Speed Rig Lockwiring	F2-81
Speed Rig Safetying	2-17g
Split Lockwasher	F2-30
Spring Pins	2-7d, F2-50
Steel Alloys	4-4
Identification	4-4a
Marking	4-4b
Steel, Identification of	T4-10
Storage	
of Aluminum Alloys	4-2c
of Gaskets and Packing	3-6c
of Magnesium Alloys	4-3c
of Phenolic Compositions	5-2c
of Plastic Materials	5-3c
of Rubber Materials	3-1a
Strength (of Rivets)	28e
Structural Screws	2-5c, F2-36
Stud and Grommet Installation	F2-59
Stud Installation	F2-65
Stud Removal	F264
Stud Types	F2-63
Studs	2-10
Installing New Stud	2-10b
Removal of Bent, Damaged, or Broken Studs	2-10a
Styles of Plate Nuts	F2-18
Substitution and Interchangeability of Material (Air Items), Authority for	1-3
Substitution and Interchangeability (of Rivets)	2-g
Substitutions for Huck, Hi-Lok, and NAS Bolts	2-28
Substitutions for Jo-Bolts, and V-Bolts	2-2t, T2-7
T	
Taper Pin Washer	F2-32
Taper Pins	2-7b
Tee-Head Bolts	2-2n
Teeth-Type Lockwashers	F2-31
Temper Designations (of Aluminum Alloys)	T3-3
Terminals, Turnbuckle	F2-72
Test Loads (of Cords)	T3-2
Testing of Magnesium Alloys	4-3b
Thin Nut, Self-Locking	F2-14
Threaded Taper Pins	F2-48
Tie Rod Terminal Fittings	2-13b, F2-71
Tie Rods	2-13
Identification	2-13a
Tie Rod Terminal Fitting	2-13b, F2-71
Tire Identification	3-2a

Downloaded from http://www.everyspec.com

INDEX - CONT

Subject	Paragraph, Figure, Table Number
T - Continued	
Tire Storage	3-2b
Tires	3-2
Tire Identification	3-2a
Tire Storage	3-2b
Titanium and Titanium Alloys	4-5, T4-11
Forming	4-5a
Identification	4-5c
Inspection	4-5b
Marking	4-5d
Tools Data, Helical Insert and	T2-15
Tools Data, Metri-Thread Insert and	T2-16
Tools Data, Twinsert and	T2-17
Torque	2-18
Considerations to be Taken Before Torquing	2-18b
Recommended Torque Values	2-18c
Torque Definitions	2-18a
Torque Definitions	2-18a
Torque for Used All-Metallic and Nonmetallic Self-Locking Nuts, Minimum Breakaway	T2-8
Torque Values, Nut, Recommended	T2-9
Tube Clamps	F2-44
Tube Identification	3-3a
Tube Storage	3-3b
Tubes	3-3
Tube Identification	3-3a
Tube Storage	3-3b
Turnbuckle Assemblies, Typical	F2-80
Turnbuckle Inspection	2-14b
Turnbuckle Installation	2-14a
Turnbuckle Terminals	F2-72
Turnbuckles	2-14
Turnbuckle Inspection	2-14b
Turnbuckle Installation	2-14a
Twinsert and Tools Data	T2-16
Twinsert Installation	F2-66
Types of Aluminum Alloys	T4-6
Types of Helical Inserts	2-11 a
Types of Plastic Materials	5-3b
Types of Rivnuts	F2-58
Typical Fittings	F2-76
Typical Turnbuckle Assemblies	F2-80
U	
Usage (of Phenolic Compositions)	5-2b
W	
Washer, Countersunk	F2-34

Downloaded from http://www.everyspec.com

INDEX - CONT

Subject	Paragraph, Figure, Table Number
T - Continued	
Washer, High Tensile	F2-33
Washer, Taper Pin	F2-32
Washers	2-4
Lockwashers	2-4b
Plainwashers	2-4a, F2-29
Special Washers	2-4c
Washers, Preload Indicating	F2-35
Wingnuts	2-3f, F2-26

Downloaded from http://www.everyspec.com

By Order of the Secretary of the Army:

GORDON R. SULLIVAN
General, United States Army
Chief of Staff

Official:

MILTON H. HAMILTON
Administrative Assistant to the
Secretary of the Army

DISTRIBUTION :

To be distributed in accordance with DA Form 12-31-E, block 3226 requirements for TM 1-1500-204-23-6.

Downloaded from http://www.everyspec.com

Downloaded from http://www.everyspec.com

These are the instructions for sending an electronic 2028

The following format must be used if submitting an electronic 2028. The subject line must be exactly the same and all fields must be included; however only the following fields are mandatory: 1, 3, 4, 5, 6, 7, 8, 9, 10, 13, 15, 16, 17, and 27.

From: "Whomever" <whomever@wherever.army.mil>
To: 2028@redstone.army.mil

Subject: DA Form 2028

1. ***From:*** Joe Smith
2. *Unit:* home
3. ***Address:*** 4300 Park
4. ***City:*** Hometown
5. ***St:*** MO
6. ***Zip:*** 77777
7. ***Date Sent:*** 19−OCT−93
8. ***Pub no:*** 55−2840−229−23
9. ***Pub Title:*** TM
10. ***Publication Date:*** 04−JUL−85
11. *Change Number:* 7
12. *Submitter Rank:* MSG
13. ***Submitter FName:*** Joe
14. *Submitter MName:* T
15. ***Submitter LName:*** Smith
16. ***Submitter Phone:*** 123−123−1234
17. ***Problem:*** **1**
18. *Page:* 2
19. *Paragraph:* 3
20. *Line:* 4
21. *NSN:* 5
22. *Reference:* 6
23. *Figure:* 7
24. *Table:* 8
25. *Item:* 9
26. *Total:* 123
27. ***Text:***

This is the text for the problem below line 27.

Downloaded from http://www.everyspec.com

Downloaded from http://www.everyspec.com

RECOMMENDED CHANGES TO PUBLICATIONS AND BLANK FORMS For use of this form, see AR 25–30; the proponent agency is ODISC4.	Use Part II (*reverse*) for Repair Parts and Special Tool Lists (RPSTL) and Supply Catalogs/ Supply Manuals (SC/SM)	DATE 8/30/02
TO: (*Forward to proponent of publication or form)(Include ZIP Code)* Commander, U.S. Army Aviation and Missile Command ATTN: AMSAM–MMC–MA–NP Redstone Arsenal, AL. 35898	FROM: (*Activity and location)(Include ZIP Code)* MSG, Jane Q. Doe 1234 Any Street Nowhere Town, AL 34565	

PART 1 – ALL PUBLICATIONS (EXCEPT RPSTL AND SC/SM) AND BLANK FORMS

PUBLICATION/FORM NUMBER	DATE	TITLE
TM 9–1005–433–24	16 Sep 2002	Organizational, Direct Support, And General Support Maintenance Manual for Machine Gun, .50 Caliber M3P and M3P Machine Gun Electrical Test Set Used On Avenger Air Defense Weapon System

ITEM NO.	PAGE NO.	PARA–GRAPH	LINE NO. *	FIGURE NO.	TABLE NO.	RECOMMENDED CHANGES AND REASON
1	WP0005 PG 3		2			Test or Corrective Action column should identify a different WP number.

** Reference to line numbers within the paragraph or subparagraph.*

TYPED NAME, GRADE OR TITLE	TELEPHONE EXCHANGE/ AUTOVON, PLUS EXTENSION	SIGNATURE
MSG, Jane Q. Doe, SFC	788–1234	

EXAMPLE

Downloaded from http://www.everyspec.com

TO: (*Forward direct to addressee listed in publication*)	FROM: (*Activity and location) (Include ZIP Code)*	DATE
Commander, U.S. Army Aviation and Missile Command ATTN: AMSAM–MMC–MA–NP Redstone Arsenal, AL. 35898	MSG, Jane Q. Doe 1234 Any Street Nowhere Town, AL 34565	8/30/02

PART II – REPAIR PARTS AND SPECIAL TOOL LISTS AND SUPPLY CATALOGS/SUPPLY MANUALS

PUBLICATION NUMBER	DATE	TITLE

PAGE NO.	COLM NO.	LINE NO.	NATIONAL STOCK NUMBER	REFERENCE NO.	FIGURE NO.	ITEM NO.	TOTAL NO. OF MAJOR ITEMS SUPPORTED	RECOMMENDED ACTION

PART III – REMARKS (*Any general remarks or recommendations, or suggestions for improvement of publications and blank forms. Additional blank sheets may be used if more space is needed.*)

EXAMPLE

TYPED NAME, GRADE OR TITLE	TELEPHONE EXCHANGE/AUTOVON, PLUS EXTENSION	SIGNATURE
MSG, Jane Q. Doe, SFC	788–1234	

USAPA V3.01

Downloaded from http://www.everyspec.com

RECOMMENDED CHANGES TO PUBLICATIONS AND BLANK FORMS For use of this form, see AR 25–30; the proponent agency is ODISC4.	Use Part II (*reverse*) for Repair Parts and Special Tool Lists (RPSTL) and Supply Catalogs/ Supply Manuals (SC/SM)	DATE
TO: (*Forward to proponent of publication or form)(Include ZIP Code)* Commander, U.S. Army Aviation and Missile Command ATTN: AMSAM-MMC-MA-NP Redstone Arsenal, AL 35898	FROM: (*Activity and location)(Include ZIP Code)*	

PART 1 – ALL PUBLICATIONS (EXCEPT RPSTL AND SC/SM) AND BLANK FORMS

PUBLICATION/FORM NUMBER	DATE	TITLE
TM 1-1500-204-23-6	31 JULY 1992	AVUM & AVIM GENERAL AIRCRAFT MAINTENANCE (HARDWARE & CONSUMABLE MATERIALS)

ITEM NO.	PAGE NO.	PARA–GRAPH	LINE NO. *	FIGURE NO.	TABLE NO.	RECOMMENDED CHANGES AND REASON

** Reference to line numbers within the paragraph or subparagraph.*

TYPED NAME, GRADE OR TITLE	TELEPHONE EXCHANGE/ AUTOVON, PLUS EXTENSION	SIGNATURE

Downloaded from http://www.everyspec.com

TO: (*Forward direct to addressee listed in publication*) Commander, U.S. Army Aviation and Missile Command ATTN: AMSAM-MMC-MA-NP Redstone Arsenal, AL 35898	**FROM:** (*Activity and location) (Include ZIP Code)*	**DATE**

PART II – REPAIR PARTS AND SPECIAL TOOL LISTS AND SUPPLY CATALOGS/SUPPLY MANUALS

PUBLICATION NUMBER	DATE	TITLE
TM 1-1500-204-23-6	31 JULY 1992	AVUM & AVIM GENERAL AIRCRAFT MAINTENANCE (HARDWARE & CONSUMABLE MATERIALS)

PAGE NO.	COLM NO.	LINE NO.	NATIONAL STOCK NUMBER	REFERENCE NO.	FIGURE NO.	ITEM NO.	TOTAL NO. OF MAJOR ITEMS SUPPORTED	RECOMMENDED ACTION

PART III – REMARKS (*Any general remarks or recommendations, or suggestions for improvement of publications and blank forms. Additional blank sheets may be used if more space is needed.)*

TYPED NAME, GRADE OR TITLE	TELEPHONE EXCHANGE/AUTOVON, PLUS EXTENSION	SIGNATURE

USAPA V3.01

Downloaded from http://www.everyspec.com

RECOMMENDED CHANGES TO PUBLICATIONS AND BLANK FORMS For use of this form, see AR 25–30; the proponent agency is ODISC4.	Use Part II (*reverse*) for Repair Parts and Special Tool Lists (RPSTL) and Supply Catalogs/ Supply Manuals (SC/SM)	DATE
TO: (*Forward to proponent of publication or form)(Include ZIP Code)* Commander, U.S. Army Aviation and Missile Command ATTN: AMSAM-MMC-MA-NP Redstone Arsenal, AL 35898	FROM: (*Activity and location)(Include ZIP Code)*	

PART 1 – ALL PUBLICATIONS (EXCEPT RPSTL AND SC/SM) AND BLANK FORMS

PUBLICATION/FORM NUMBER	DATE	TITLE
TM 1-1500-204-23-6	31 JULY 1992	AVUM & AVIM GENERAL AIRCRAFT MAINTENANCE (HARDWARE & CONSUMABLE MATERIALS)

ITEM NO.	PAGE NO.	PARA–GRAPH	LINE NO. *	FIGURE NO.	TABLE NO.	RECOMMENDED CHANGES AND REASON

** Reference to line numbers within the paragraph or subparagraph.*

TYPED NAME, GRADE OR TITLE	TELEPHONE EXCHANGE/ AUTOVON, PLUS EXTENSION	SIGNATURE

Downloaded from http://www.everyspec.com

TO: (*Forward direct to addressee listed in publication*) Commander, U.S. Army Aviation and Missile Command ATTN: AMSAM-MMC-MA-NP Redstone Arsenal, AL 35898	**FROM:** (*Activity and location) (Include ZIP Code)*	**DATE**

PART II – REPAIR PARTS AND SPECIAL TOOL LISTS AND SUPPLY CATALOGS/SUPPLY MANUALS

PUBLICATION NUMBER	DATE	TITLE
TM 1-1500-204-23-6	31 JULY 1992	AVUM & AVIM GENERAL AIRCRAFT MAINTENANCE (HARDWARE & CONSUMABLE MATERIALS)

PAGE NO.	COLM NO.	LINE NO.	NATIONAL STOCK NUMBER	REFERENCE NO.	FIGURE NO.	ITEM NO.	TOTAL NO. OF MAJOR ITEMS SUPPORTED	RECOMMENDED ACTION

PART III – REMARKS (*Any general remarks or recommendations, or suggestions for improvement of publications and blank forms. Additional blank sheets may be used if more space is needed.)*

TYPED NAME, GRADE OR TITLE	TELEPHONE EXCHANGE/AUTOVON, PLUS EXTENSION	SIGNATURE

USAPA V3.01

Downloaded from http://www.everyspec.com

RECOMMENDED CHANGES TO PUBLICATIONS AND BLANK FORMS For use of this form, see AR 25–30; the proponent agency is ODISC4.	Use Part II (*reverse*) for Repair Parts and Special Tool Lists (RPSTL) and Supply Catalogs/ Supply Manuals (SC/SM)	DATE
TO: (*Forward to proponent of publication or form)(Include ZIP Code)* Commander, U.S. Army Aviation and Missile Command ATTN: AMSAM-MMC-MA-NP Redstone Arsenal, AL 35898	FROM: (*Activity and location)(Include ZIP Code)*	

PART 1 – ALL PUBLICATIONS (EXCEPT RPSTL AND SC/SM) AND BLANK FORMS

PUBLICATION/FORM NUMBER	DATE	TITLE
TM 1-1500-204-23-6	31 JULY 1992	AVUM & AVIM GENERAL AIRCRAFT MAINTENANCE (HARDWARE & CONSUMABLE MATERIALS)

ITEM NO.	PAGE NO.	PARA–GRAPH	LINE NO. *	FIGURE NO.	TABLE NO.	RECOMMENDED CHANGES AND REASON

** Reference to line numbers within the paragraph or subparagraph.*

TYPED NAME, GRADE OR TITLE	TELEPHONE EXCHANGE/ AUTOVON, PLUS EXTENSION	SIGNATURE

Downloaded from http://www.everyspec.com

TO: (*Forward direct to addressee listed in publication*) Commander, U.S. Army Aviation and Missile Command ATTN: AMSAM-MMC-MA-NP Redstone Arsenal, AL 35898	**FROM:** (*Activity and location) (Include ZIP Code)*	**DATE**

PART II – REPAIR PARTS AND SPECIAL TOOL LISTS AND SUPPLY CATALOGS/SUPPLY MANUALS

PUBLICATION NUMBER	DATE	TITLE
TM 1-1500-204-23-6	31 JULY 1992	AVUM & AVIM GENERAL AIRCRAFT MAINTENANCE (HARDWARE & CONSUMABLE MATERIALS)

PAGE NO.	COLM NO.	LINE NO.	NATIONAL STOCK NUMBER	REFERENCE NO.	FIGURE NO.	ITEM NO.	TOTAL NO. OF MAJOR ITEMS SUPPORTED	RECOMMENDED ACTION

PART III – REMARKS (*Any general remarks or recommendations, or suggestions for improvement of publications and blank forms. Additional blank sheets may be used if more space is needed.)*

TYPED NAME, GRADE OR TITLE	TELEPHONE EXCHANGE/AUTOVON, PLUS EXTENSION	SIGNATURE

USAPA V3.01

Downloaded from http://www.everyspec.com

The Metric System and Equivalents

Linear Measure

1 centimeter = 10 millimeters = .39 inch
1 decimeter = 10 centimeters = 3.94 inches
1 meter = 10 decimeters = 39.37 inches
1 dekameter = 10 meters = 32.8 feet
1 hectometer = 10 dekameters = 328.08 feet
1 kilometer = 10 hectometers = 3,280.8 feet

Weights

1 centigram = 10 milligrams = .15 grain
1 decigram = 10 centigrams = 1.54 grains
1 gram = 10 decigram = .035 ounce
1 decagram = 10 grams = .35 ounce
1 hectogram = 10 decagrams = 3.52 ounces
1 kilogram = 10 hectograms = 2.2 pounds
1 quintal = 100 kilograms = 220.46 pounds
1 metric ton = 10 quintals = 1.1 short tons

Liquid Measure

1 centiliter = 10 milliters = .34 fl. ounce
1 deciliter = 10 centiliters = 3.38 fl. ounces
1 liter = 10 deciliters = 33.81 fl. ounces
1 dekaliter = 10 liters = 2.64 gallons
1 hectoliter = 10 dekaliters = 26.42 gallons
1 kiloliter = 10 hectoliters = 264.18 gallons

Square Measure

1 sq. centimeter = 100 sq. millimeters = .155 sq. inch
1 sq. decimeter = 100 sq. centimeters = 15.5 sq. inches
1 sq. meter (centare) = 100 sq. decimeters = 10.76 sq. feet
1 sq. dekameter (are) = 100 sq. meters = 1,076.4 sq. feet
1 sq. hectometer (hectare) = 100 sq. dekameters = 2.47 acres
1 sq. kilometer = 100 sq. hectometers = .386 sq. mile

Cubic Measure

1 cu. centimeter = 1000 cu. millimeters = .06 cu. inch
1 cu. decimeter = 1000 cu. centimeters = 61.02 cu. inches
1 cu. meter = 1000 cu. decimeters = 35.31 cu. feet

Approximate Conversion Factors

To change	*To*	*Multiply by*	*To change*	*To*	*Multiply by*
inches	centimeters	2.540	ounce-inches	Newton-meters	.007062
feet	meters	.305	centimeters	inches	.394
yards	meters	.914	meters	feet	3.280
miles	kilometers	1.609	meters	yards	1.094
square inches	square centimeters	6.451	kilometers	miles	.621
square feet	square meters	.093	square centimeters	square inches	.155
square yards	square meters	.836	square meters	square feet	10.764
square miles	square kilometers	2.590	square meters	square yards	1.196
acres	square hectometers	.405	square kilometers	square miles	.386
cubic feet	cubic meters	.028	square hectometers	acres	2.471
cubic yards	cubic meters	.765	cubic meters	cubic feet	35.315
fluid ounces	milliliters	29,573	cubic meters	cubic yards	1.308
pints	liters	.473	milliliters	fluid ounces	.034
quarts	liters	.946	liters	pints	2.113
gallons	liters	3.785	liters	quarts	1.057
ounces	grams	28.349	liters	gallons	.264
pounds	kilograms	.454	grams	ounces	.035
short tons	metric tons	.907	kilograms	pounds	2.205
pound-feet	Newton-meters	1.356	metric tons	short tons	1.102
pound-inches	Newton-meters	.11296			

Temperature (Exact)

°F	Fahrenheit temperature	5/9 (after subtracting 32)	Celsius temperature	°C

Downloaded from http://www.everyspec.com

PIN: 070464-000

Downloaded from http://www.everyspec.com

This fine document...

Was brought to you by me:

Liberated Manuals -- free army and government manuals

Why do I do it? I am tired of sleazy CD-ROM sellers, who take publicly available information, slap “watermarks” and other junk on it, and sell it. Those masters of search engine manipulation make sure that their sites that sell free information, come up first in search engines. They did not create it... They did not even scan it... Why should they get your money? Why are not letting you give those free manuals to your friends?

I am setting this document FREE. This document was made by the US Government and is NOT protected by Copyright. Feel free to share, republish, sell and so on.

I am not asking you for donations, fees or handouts. If you can, please provide a link to liberatedmanuals.com, so that free manuals come up first in search engines:

<A HREF=http://www.liberatedmanuals.com/>Free Military and Government Manuals</A>

- Sincerely
  Igor Chudov
  http://igor.chudov.com/