Downloaded from http://www.everyspec.com

FM 55-17

CARGO SPECIALISTS' HANDBOOK

DISTRIBUTION RESTRICTION: Approved for public release; distribution is unlimited.

HEADQUARTERS, DEPARTMENT OF THE ARMY

Downloaded from http://www.everyspec.com

FIELD MANUAL
NO 55-17

Headquarters
Department of the Army
Washington, DC, 16 February 1999

CARGO SPECIALISTS' HANDBOOK

TABLE OF CONTENTS

Page

PREFACE x

PART ONE **TERMINAL ORGANIZATIONS, FACILITIES, AND VESSELS** 1-1

CHAPTER 1 **AN OVERVIEW OF TERMINAL OPERATIONS** 1-1

Section I. Overview 1-1

1-1. INTRODUCTION 1-1
1-2. TYPES OF TERMINAL OPERATIONS 1-1
1-3. TERMINAL ORGANIZATIONS IN THE CONTINENTAL UNITED STATES 1-3
1-4. TERMINAL ORGANIZATIONS IN A THEATER OF OPERATIONS 1-3
1-5. RESPONSIBILITIES OF THE MILITARY SEALIFT COMMAND 1-6
1-6. RELATIONSHIPS BETWEEN TERMINAL UNITS AND MILITARY SEALIFT COMMAND SHIPS 1-6
1-7. RESPONSIBILITY FOR CLEANING CARGO SPACES 1-7

Section II. Strategic Sealift Ships 1-8

1-8. MISSION OF THE STRATEGIC SEALIFT SHIPS 1-8
1-9. ORGANIZATIONAL OVERVIEW 1-8
1-10. MILITARY SEALIFT COMMAND 1-8
1-11. MILITARY TRAFFIC MANAGEMENT COMMAND 1-9
1-12. DEPLOYING UNITS 1-9
1-13. SUPERCARGO PERSONNEL 1-10
1-14. CARGO MAINTENANCE CREW 1-10

DISTRIBUTION RESTRICTION: Approved for public release; distribution is unlimited.

*This publication supersedes FM 55-17, 9 September 1990.

Downloaded from http://www.everyspec.com

Page

CHAPTER 2 HARBOR FACILITIES AND VESSELS 2-1

Section I. Overview 2-1

2-1. INTRODUCTION 2-1
2-2. SHIPBOARD DIRECTIONS 2-1
2-3. CARGO COMPARTMENTS 2-2
2-4. US MARITIME ADMINISTRATION CLASSIFICIATION SYSTEMS 2-4
2-5. SHIPPING CATEGORIES 2-4
2-6. SEALIFT ENHANCEMENT FEATURES PROGRAM 2-8
2-7. READY RESERVE FORCE 2-13

Section II. T-AKR 295 and 296 Class Ship Configurations 2-14

2-8. GENERAL SHIP CHARACTERISTICS 2-14

PART TWO GEAR AND EQUIPMENT 3-1

CHAPTER 3 SHIP'S GEAR AND RIGGING PROCEDURES 3-1

Section I. Ship's Gear 3-1

3-1. INTRODUCTION 3-1
3-2. CHAINS, HOOKS, AND SHACKLES 3-1
3-3. RIGGINGS AND DECK FITTINGS 3-4
3-4. TYPES OF WINCHES 3-8
3-5. WINCH OPERATION 3-9
3-6. SIGNALS USED IN WINCH OPERATIONS 3-11

Section II. Rigging Procedures 3-11

3-7. RIGGING STANDARD CARGO BOOMS 3-11
3-8. TOPPING BOOMS 3-13
3-9. LOWERING BOOMS 3-15
3-10. RIGGING SYSTEMS 3-24
3-11. RIGGING HATCH TENTS 3-27
3-12. RIGGING SAVE-ALLS 3-28
3-13. RIGGING STANDARD BOOMS FOR HEAVY LIFTS 3-28
3-14. HEAVY-LIFT BOOMS 3-30
3-15. MODERN JUMBO BOOMS 3-34
3-16. SINGLE SWINGING BOOM 3-35
3-17. YARD-AND-STAY RIG WITH DOUBLE PURCHASE 3-36
3-18. BLOCK-IN-BIGHT RIGGING ON DOUBLE-RIGGED HATCH 3-37
3-19. FOUR BOOMS DOUBLED UP ON DOUBLE-RIGGED HATCH 3-39
3-20. HAGGLUNDS CRANE 3-40
3-21. HAND SIGNALS FOR HAGGLUNDS CRANE OPERATION 3-44

Downloaded from http://www.everyspec.com

Page

CHAPTER 4 CARGO-HANDLING GEAR 4-1

4-1. INTRODUCTION 4-1
4-2. GENERAL-PURPOSE GEAR 4-1
4-3. SPECIAL-PURPOSE GEAR 4-4
4-4. CARGO-HANDLING AIDS 4-8
4-5. CARE OF CARGO-HANDLING GEAR 4-9

CHAPTER 5 MATERIALS-HANDLING EQUIPMENT 5-1

5-1. INTRODUCTION 5-1
5-2. FORKLIFT TRUCKS 5-1
5-3. TRACTORS, TRAILERS, AND HAND TRUCKS 5-3
5-4. PALLET JACKS 5-4
5-5. CRANES 5-4
5-6. HELICOPTER POSITIONING DOLLY 5-7
5-7. CONTAINER HANDLERS 5-9

CHAPTER 6 BLOCK AND TACKLE, WIRE ROPE, AND MARLINESPIKE SEAMANSHIP 6-1

Section I. Blocks and Tackles 6-1

6-1. INTRODUCTION 6-1
6-2. COMPONENTS OF WOODEN BLOCKS 6-1
6-3. COMPONENTS OF METAL BLOCKS 6-1
6-4. TYPES OF BLOCKS 6-2
6-5. SIZES OF BLOCKS 6-3
6-6. MAINTENANCE OF METAL BLOCKS 6-4
6-7. TACKLE USES AND TYPES 6-4
6-8. REEVING TACKLES 6-5
6-9. MECHANICAL ADVANTAGE 6-6
6-10. FRICTION 6-7
6-11. BREAKING STRESS AND SAFE WORKING LOAD 6-7

Section II. Wire Rope 6-8

6-12. CARE AND USE OF WIRE ROPE 6-8
6-13. MAKEUP OF WIRE ROPE 6-9
6-14. CLASSIFICATION 6-9
6-15. MEASUREMENT 6-10
6-16. SAFE WORKING LOAD AND BREAKING STRENTH 6-10
6-17. INSPECTION OF WIRE ROPES 6-10
6-18. HANDLING 6-11

Section III. Marlinespike Seamanship 6-14

6-19. CHARACTERISTICS AND FIBER LINE 6-14
6-20. CORDAGE 6-16

Downloaded from http://www.everyspec.com

Page

6-21. INSPECTION OF LINES 6-16
6-22. UNCOILING NEW LINE....6-17
6-23. WHIPPING LINE....6-17
6-24. KNOTS, BENDS, AND HITCHES....6-19
6-25. SPLICING THREE-STRAND FIBER LINE....6-22
6-26. PUTTING AN EYE IN WIRE ROPE....6-25

PART THREE OCEAN TERMINAL OPERATIONS....7-1

CHAPTER 7 PRESTOWAGE PLANNING....7-1

Section I. Terms and Factors....7-1

7-1. INTRODUCTION 7-1
7-2. VESSEL TONNAGE TERMS 7-1
7-3. STOWAGE PLANNING FACTORS 7-1
7-4. STABILITY....7-6
7-5. STOWAGE AND CAPACITY BOOKLET....7-6
7-6. VESSEL DEAD WEIGHT SCALE....7-7
7-7. WEIGHT DISTRIBUTION....7-8
7-8. TRIM TABLE....7-9

Section II. Steps in Prestow Planning....7-12

7-9. OVERALL CARGO LOAD PLANNING 7-12
7-10. DELIVERING CARGO TO SHIPSIDE 7-19
7-11. FACILITY REQUIREMENTS (T-AKR 295/296 CLASS SHIPS.7-19
7-12. LOADING TIME....7-20
7-13. CARGO LOADING ORDER (T-AKR 295/296 CLASS SHIPS ...7-21
7-14. FINAL STOWAGE PLAN....7-24

Section III. Cargo Stowage Plan....7-24

7-15. CONVENTIONAL CARGO VESSELS....7-24
7-16. BREAK-BULK VESSEL STOWAGE PLANS 7-25
7-17. CONTAINER VESSEL STOWAGE PLAN....7-29
7-18. DISCHARGE PLANNING 7-34
7-19. DISCHARGE OVER WHARVES 7-34
7-20. BERTH ASSIGNMENT 7-35
7-21. EQUIPMENT REQUIREMENTS....7-35
7-22. CARGO CLEARANCE TRANSPORTATION REQUIRMENTS 7-35

CHAPTER 8 LOADING AND DISCHARGING CARGO VESSELS 8-1

Section I. Loading General Cargo....8-1

8-1. INTRODUCTION 8-1
8-2. ADMINISTRATIVE LOADING 8-1

Downloaded from http://www.everyspec.com

Page

8-3. CARGO-HANDLING OPERATIONS 8-1
8-4. STOWAGE OF DIFFERENT TYPES OF CARGO 8-2
8-5. GENERAL RULES FOR STOWING CARGO 8-16
8-6. SECURING OF CARGO 8-16
8-7. LASHING AS A MEANS OF SECURING 8-16
8-8. SECURING DECK CARGO 8-18
8-9. DUNNAGE 8-20
8-10. OTHER MEANS OF SECURING CARGO 8-22

Section II. Discharging Break-Bulk Cargo 8-24

8-11. DECK CARGO 8-24
8-12. CARGO IN HOLDS 8-24
8-13. TERMINAL CLEARANCE 8-24
8-14. CARGO TALLYING METHODS 8-25
8-15. TALLYING BREAK-BULK CARGO 8-27
8-16. TEMPORARY HOLDING AREAS 8-30
8-17. CARGO DAMAGE AND LOSS 8-30
8-18. CARGO SECURITY 8-32
8-19. SAFETY 8-34

Section III. Loading Phase of RO/RO Operations 8-35

8-20. RO/RO SYSTEM 8-35
8-21. RO/RO VEHICLE OPERATIONS PROCEDURES 8-36
8-22. LIFT-ON OPERATIONS 8-37
8-23. AFT SECTION LIFT-ON OPERATIONS 8-37
8-24. MIDSECTION LIFT-ON OPERATIONS 8-44
8-25. FORWARD SECTION LIFT-ON OPERATIONS 8-45
8-26. ROLL-ON OPERATIONS 8-46
8-27. ROLL-ON LOADING SEQUENCE 8-46
8-28. TRAFFIC CONTROL 8-51
8-29. STOWAGE OF VEHICLES WITHIN FIRE LANES 8-52
8-30. RAMP PROBLEMS DUE TO TIDES 8-52

Section IV. Discharge Phase of RO/RO Operations 8-52

8-31. ROLL-OFF OPERATIONS 8-52
8-32. LIFT-OFF OPERATIONS 8-53

Section V. Cargo Operations for T-AKR 295 and 296 Class Ships 8-58

8-33. CARGO OPERATIONS (T-AKR 295 AND 296 CLASS SHIPS) 8-58
8-34. RO/RO OPERATIONS (T-AKR 295 CLASS) 8-58
8-35. DUAL RAMP OPERATIONS (T-AKR 295 CLASS) 8-59
8-36. SINGLE RAMP OPERATIONS (T-AKR 295 CLASS) 8-62
8-37. SINGLE RAMP OPERATIONS FROM THE STERN RAMP 8-62

Downloaded from http://www.everyspec.com

Page

8-38. SINGLE RAMP OPERATIONS FROM THE SIDE PORT RAMP 8-63
8-39. LO/LO OPERATIONS (T-AKR 295 CLASS)....8-64
8-40. RO/RO OPERATIONS (T-AKR 296 CLASS)....8-64
8-41. DUAL RAMP OPERATIONS FROM STERN RAMP....8-65
8-42. DUAL RAMP OPERATIONS FROM THE SIDE PORT RAMP 8-66
8-43. SINGLE RAMP OPERATIONS (T-AKR 296 CLASS) 8-68
8-44. LO/LO OPERATIONS (T-AKR 296 CLASS)....8-69

CHAPTER 9 SECURING, LOADING, AND STOWING HAZARDOUS CARGO ..9-1

9-1. FUNDAMENTAL SECURING PROCEDURES 9-1
9-2. PRELOAD SECURING....9-2
9-3. LOADING PROCEDURES 9-3
9-4. TYPES OF STOWAGE 9-5
9-5. STOWAGE GROUPS....9-6
9-6. BOMB AND MISSILE STOWAGE PROCEDURES....9-7
9-7. SECURING STRUCTURES....9-10

CHAPTER 10 SPECIAL CARGO-HANDLING OPERATIONS....10-1

10-1. INTRODUCTION 10-1
10-2. LOGISTICS OVER-THE-SHORE OPERATIONS 10-1
10-3. LASH AND SEABEE OPERATIONS 10-5
10-4. BLOCKING AND BRACING ABOARD LIGHTERS.... 10-10

CHAPTER 11 SAFETY IN TERMINAL OPERATIONS 11-1

11-1. INTRODUCTION 11-1
11-2. LOGISTICS OVER-THE-SHORE OPERATIONS 11-1
11-3. OPENING AND CLOSING HATCHES 11-3
11-4. VESSEL WORKING SURFACE....11-5
11-5. SHIP'S GEAR....11-7
11-6. OTHER GEAR AND EQUIPMENT 11-11
11-7. HANDLING CARGO.... 11-21
11-8. GENERAL WORKING CONDITIONS.... 11-24

CHAPTER 12 STUFFING THE CONTAINER 12-1

12-1. INTRODUCTION 12-1
12-2. GENERAL PLANNING CONSIDERATIONS....12-1
12-3. CARDBOARD CARTONS 12-1
12-4. PALLETIZED CARGO....12-1
12-5. BAGGED, SACKED, AND BALED CARGO....12-2
12-6. DRUMS....12-3
12-7. WOODEN BOXES AND CRATES....12-4
12-8. MACHINERY AND HEAVY-END ITEMS 12-5
12-9. VEHICLES....12-5

Downloaded from http://www.everyspec.com

Page

12-10. MIXED COMMODITIES 12-6
12-11. PERISHABLES 12-6

CHAPTER 13 CONTAINER HANDLING AND LABELING 13-1

13-1. INTRODUCTION 13-1
13-2. STRADDLE CRANES 13-1
13-3. STRADDLE TRUCKS 13-1
13-4. DOCKSIDE CONTAINER CRANES 13-1
13-5. SHIPBOARD CONTAINER CRANES 13-2
13-6. LABELING AND HANDLING OF CONTAINERS 13-2
13-7. SPECIAL MARKINGS 13-4
13-8. SECURING OF CONTAINERS 13-7
13-9. LIFTING OF CONTAINERS 13-9

CHAPTER 14 CONTAINER DOCUMENTATION 14-1

14-1. INTRODUCTION 14-1
14-2. SHIPMENT CLEARANCE 14-1
14-3. BASIC DOCUMENTATION 14-1
14-4. TALLYING CONTAINERS 14-9

CHAPTER 15 CONTAINER CONSTRUCTION AND INSPECTION 15-1

15-1. INTRODUCTION 15-1
15-2. COMMERCIAL CONTAINER CONSTRUCTION 15-1
15-3. CONDUCTING A CONTAINER ACCEPTANCE INSPECTION 15-3

PART FIVE AIR TERMINAL OPERATIONS 16-1

CHAPTER 16 AIR MOVEMENTS 16-1

16-1. INTRODUCTION 16-1
16-2. AIR MOBILITY COMMAND 16-1
16-3. AIRCRAFT LOADING DATA 16-1
16-4. DEPLOYING UNIT'S RESPONSIBILITIES 16-7
16-5. LOADING UNIT'S RESPONSIBILITIES 16-8
16-6. HAZARDOUS CARGO 16-9
16-7. TROOP COMMANDER'S RESPONSIBILITIES 16-9
16-8. SAFETY 16-11

CHAPTER 17 DETERMINATION OF CENTER OF BALANCE AND CENTER OF GRAVITY 17-1

Section I. Center of Balance (Vehicles and General Cargo) 17-1

17-1. INTRODUCTION 17-1
17-2. VEHICLE MEASUREMENTS 17-1

Downloaded from http://www.everyspec.com

Page

17-3. WEIGHT AND CENTER OF BALANCE 17-2

Section II. Aircraft Center of Gravity (Weight and Balance) 17-10

17-4. CENTER OF GRAVITY..... 17-10
17-5. WEIGHT AND BALANCE 17-10

CHAPTER 18 463L PALLETS AND SHORING 18-1

18-1. INTRODUCTION 18-1
18-2. CONSTRUCTION OF 463L PALLETS.....18-1
18-3. LOADING CARGO ON A 463L PALLET 18-1
18-4. SECURING CARGO TO THE PALLET 18-3
18-5. MULTI-PALLETIZATION 18-5
18-6. STORAGE OF 463L PALLETS AND NETS.....18-8
18-7. CH-47 HICHS 18-9
18-8. SHORING 18-11

PART SIX RAIL AND INLAND WATER TERMINAL OPERATIONS 19-1

CHAPTER 19 MOTOR TRANSPORT 19-1

19-1. INTRODUCTION 19-1
19-2. WEIGHT AND LOAD DISTRIBUTION.....19-1
19-3. RULES FOR LOADING.....19-1
19-4. UNITIZED LOADS.....19-2
19-5. EXPLOSIVES AND FLAMMABLE LIQUIDS 19-5

CHAPTER 20 RAIL TRANSPORT.....20-1

20-1. INTRODUCTION 20-1
20-2. PREPLANNING STAGE.....20-1
20-3. DETAILED PLANNING 20-2
20-4. LOADING VEHICLES IN RAIL CARS.....20-4
20-5. LOADING UNITIZED CARGO IN RAIL CARS 20-8
20-6. HAZARDOUS CARGO 20-9
20-7. GENERAL RULES FOR LOADING.....20-9
20-8. IDLER CARS 20-11
20-9. VEHICLE SECUREMENT 20-12
20-10. MULTILEVEL FLATCARS..... 20-21
20-11. CHAIN SECUREMENT..... 20-21
20-12. CHAIN SECUREMENT OF A 2 1/2-TON TRUCK 20-23

APPENDIX A CONVERSION FACTORS A-1

APPENDIX B WARNING LABELS B-1

GLOSSARY Glossary-1

Downloaded from http://www.everyspec.com

Page

REFERENCES.....References-1

INDEX Index-1

Downloaded from http://www.everyspec.com

PREFACE

This manual provides guidance and technical information relevant to personnel who move supplies and materiel through water, motor, rail, and air terminals. The specific intent of this manual is to provide instructions in all phases of cargo handling with the emphasis on securing, loading, and unloading all types and configurations of cargo. Descriptions of cargo-handling gear are also provided in some detail.

The US Army's environmental strategy into the 21st century defines the Army's leadership commitment and philosophy for meeting present and future environmental challenges. It provides a framework to ensure that environmental stewardship ethic governs all Army activities. The Army's environmental vision is to be a national leader in environmental and natural resource stewardship for present and future generations, as an integral part of all Army missions. The Army's environmental vision statement communicates the Army's commitment to the environment.

The proponent of this publication is HQ TRADOC. Submit changes for improving this publication on DA Form 2028 (Recommended Changes to Publications and Blank Forms) and forward it to Commander, USACASCOM, Training Directorate, ATTN: ATCL-AT, 401 1st Street Suite 227, Fort Lee, VA 23801-1511.

Unless this publication states otherwise, masculine nouns and pronouns do not refer exclusively to men.

Downloaded from http://www.everyspec.com

PART ONE

TERMINAL ORGANIZATIONS, FACILITIES, AND VESSELS

CHAPTER 1

AN OVERVIEW OF TERMINAL OPERATIONS

Section I. Overview

1-1. INTRODUCTION. This chapter provides an overview of the following:

- Types of terminal operations.
- Marine terminal operations within CONUS.
- Terminal organizations in a TOPNS.
- Responsibilities of MSC.
- The relationship between MSC, transportation terminal service units, and the ship's officers.

It also discusses the Congressionally mandated MRS of 1992, the DOD recommended development of an integrated mobility plan that gives the Army a strategically effective deployment capability based on the current reduction-in-force and the revised national security strategy. The study also identifies a shortfall of three million square feet of surge sealift capability and a shortfall of two million square feet of prepositioned sealift capability to carry Army combat, combat support, and combat service support equipment. The new integrated mobility plan calls for the expansion of the Army Afloat Prepositioning Program and is being partially met through the introduction of the T-AKR 295 and 296 Class Strategic Sealift Ships.

1-2. TYPES OF TERMINAL OPERATIONS. The primary categories for Army terminal operations are ocean water terminal operations and inland terminal operations.

a. **Ocean Water Terminals.** Ocean water terminals are classified as fixed-port facilities, unimproved port facilities, or bare beach port facilities. These facilities are subclassified as general cargo terminal, container terminal, RO/RO terminal, and combination terminal. Normally, general cargo terminal operations apply to all ocean water terminals. Container, RO/RO, and combination terminal usually refer to a fixed-port facility. LOTS operations no longer refer to only bare beach operations. The expanded definition of LOTS applies to any operation where oceangoing cargo vessels discharge to lighterage.

(1) ***Fixed port facilities.*** Fixed port terminals are an improved network of cargo handling facilities specifically designed for transfer of oceangoing freight, vessel discharge operations, and port clearance. At these facilities, deep-draft oceangoing vessels come alongside a pier, ship or quay and discharge cargo directly onto the apron. Most cargo moves into open or covered in-transit storage to await terminal clearance. Discharge selected cargo direct to land

Downloaded from http://www.everyspec.com

transport. Fixed port facilities also have state-of-the-art facilities and equipment, and are organized to support cargo discharge and port clearance operations.

(2) ***Unimproved port facilities.*** Unimproved port facilities are not designed for cargo discharge. They do not have the facilities, equipment, and infrastructure characteristic of fixed-port facilities. Unimproved port facilities have insufficient water depth and pier length to accommodate oceangoing cargo vessels. Therefore, use of shallow-draft lighterage is necessary in discharging oceangoing vessels that are anchored in the stream. This fact qualifies the operation as a LOTS operation. In most instances, US Army cargo transfer units use their own TOE equipment to operate unimproved port facilities.

(3) ***Bare beach facilities.*** Bare beach facilities best fit the perceived definition of a LOTS operation. In a bare beach facility, Army lighterage is discharged across the beach. There are no facilities, equipment, or infrastructure available equal to cargo discharge or port clearance operations. Beach terminals require specifically selected sites where delivery of cargo by lighterage to or across the beach and into marshaling yards or onto waiting clearance transportation. There is usage of landing crafts, amphibians, and terminal units in a beach operation under the command and control of a terminal battalion.

NOTE: Fixed ports, unimproved ports, and bare beach sites can handle general cargo. They can be identified as general cargo fixed ports, general cargo unimproved ports, or general cargo bare beach sites.

(4) ***Container terminals.*** Container terminals are specialized facilities designed for uninterrupted, high-volume flow of containers between ship and inland transportation modes, and vice versa. Specialized, largely non-self-sustaining vessels that are unloaded by high-productivity industrial equipment service these terminals. These terminals may have facilities for consolidation of break-bulk cargo into containers. An efficient container terminal equipped with gantry cranes can usually discharge and backload a non-self-sustaining containership in 24 to 48 hours.

(5) ***RO/RO terminals.*** RO/RO terminals are designed for handling rolling stock. These terminals have a deep water berth, a centralized management cluster, terminal in- and out-processing facilities, and a massive, open unrestricted parking area. The key element of these terminals is that all cargo remains on wheels throughout the terminal transit cycle. Place nontrailerable cargo, such as containers arriving at the port on railcars, on specially designed low-silhouette cargo trailers for the ocean transit. Vessel turnaround times vary according to the size of the vessel and the quantity of cargo on board. Normal completion of discharge and backloading is 18 to 36 hours. The productivity of a RO/RO terminal depends on the cargo rolling off the ship, through the terminal and related processing, and on to final destination.

NOTE: During a fixed-port operation, discharge the vessel directly to land rather than to lighterage. A RO/RO is a fixed-port terminal.

b. **Inland Terminals.** Inland terminals provide cargo transfer facilities at interchange points between air, rail, motor, and water transportation nets. They also provide these facilities with connecting links between these modes when terrain and operational requirements cause a change in carrier.

Downloaded from http://www.everyspec.com

1-3. TERMINAL ORGANIZATIONS IN THE CONTINENTAL UNITED STATES. The Army is the single-service manager for surface transportation and for the operation of common-user ocean terminals for DOD-sponsored cargoes within CONUS.

a. The MTMC is the Army's organization for performing these functions within CONUS. The MTMC commands and operates military common-war ocean terminals, or obtains the use of commercial ocean terminal facilities when required to satisfy DOD export requirements.

b. MTMC contracts as a single port manager berthing and docking services provided for vessels, ensures cargo is loaded at the specified time, prepares the stowage plan, and handles the cargo. MTMC will also prepare the hold for receiving cargo; stow, lash, and shore cargo as required; and clean the holds of government-owned or government-operated vessels after the cargo is discharged.

c. Military ocean terminals provide interchange of DOD-general cargo between land and water routes. Special-purpose ports provide for the shipment or receipt of ammunition and explosives. Those ports that do not have military ocean terminal facilities direct and control the operation of common-user facilities. These ports also direct and control outport operations managed by the MTMC activity providing terminal services through a commercial contractor rather than through a military operator. These services also involve operating detachments as subactivities in port complexes where there is insufficient military traffic to warrant an outport or military ocean terminal organization. FM 55-60 contains details on CONUS military ocean terminal operations.

1-4. TERMINAL ORGANIZATIONS IN A THEATER OF OPERATIONS. In a theater of operations, Army terminal operations will include loading, unloading, and handling in-transit cargo and personnel between any of the various modes of transportation. Establishment of terminals is for cargo to carry at beginning, destination, and in-transit points.

a. **Theater Support Command Materiel Management Center.** The TSC MMC provides movement requirements to the MCA for movement of material. Enhanced automation capabilities improve coordination of intratheater movement services and advanced reporting of incoming cargo shipments.

b. **Transportation Composite Group.** The transportation composite group is normally the senior terminal activity in the theater of operations. Figure 1-1, page 1-4 shows a theater terminal organization. The Battalion that is operating primarily commands deep water terminals, Army air terminals, or similar activities that are conducted with adjacent or related water terminal activities. The composite group is a planning and control organization and does not enter into day-to-day operations.

Downloaded from http://www.everyspec.com

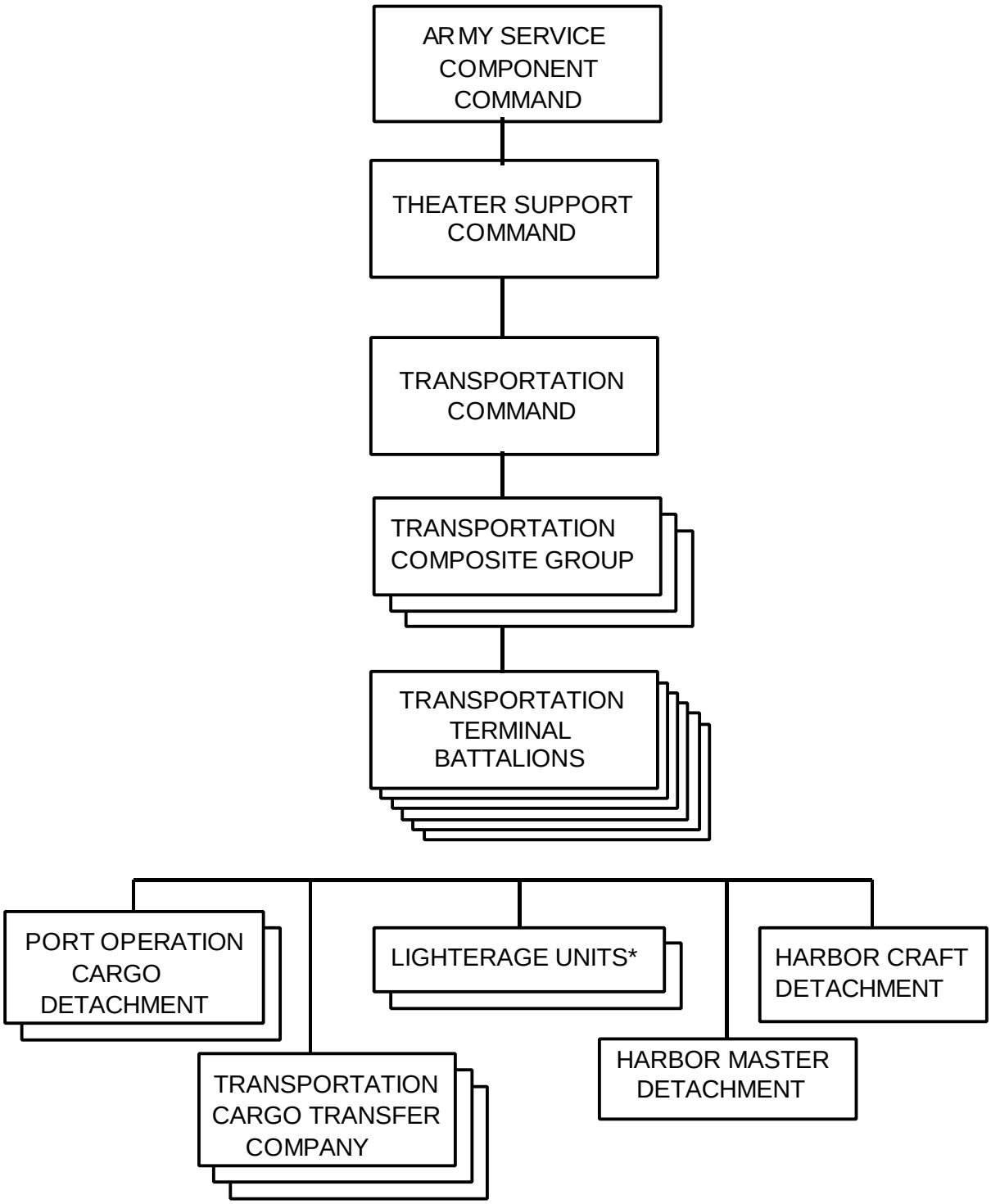

Figure 1-1. Theater terminal organization

Downloaded from http://www.everyspec.com

c. **Terminal Battalion.** The terminal battalion commands, controls, plans, and supervises the attached operating units in day-to-day operations. The commander of a terminal battalion has a specific operational area and mission. Cargo transfer units, watercraft composite units, amphibian and land transport units, and various other units and equipment are attached to the terminal battalion. FM 55-60 contains detailed information on the organization and operation of transportation terminal battalions and terminal service and terminal transfer companies.

d. **Transportation Cargo Transfer Company.** The capabilities of the transportation cargo transfer company are as follows:

(1) At Level 1, this unit can operate up to four rail, truck or air terminals on a 24-hour per day basis. The size of the terminal and/or scope of the operation may mean that more than one platoon is required to operate a given terminal. Daily capability is as follows:

(a) In rail or truck terminal operations transship 820 STONs of break-bulk cargo or 200 containers per terminal. For a four terminal transship a total of .3,280 STONs of break-bulk cargo or 800 containers (or a combination thereof).

(b) In air terminal operations transship 550 STONs of non-containerized cargo or 160 twenty-foot container equivalents per terminal. For a four terminal transship total of 2,200 STONs of non-containerized cargo or 640 twenty-foot container equivalents (or a combination thereof).

(c) In a fixed port accomplish one, but not all.

- Given a container ship and pierside cranes, discharge or load 500 containers per day or combination thereof.
- When augmented by the port operations cargo detachment (TOE 55560LF00), discharge or load 2,500 STONs of break-bulk cargo. In simultaneous operations, move 1,250 STONs in each direction.
- With a RO/RO ship, discharge up to 1,000 vehicles or load up to 750 vehicles.

(d) In LOTS operation, augmented by the port operations cargo detachment, accomplish one but not all.

- Discharge or load 300 containers. In simultaneous perations move 150 containers in each direction.
- Discharge or load 1,500 STONs of break-bulk cargo. In simultaneous operation move 750 STONs in each direction.
- Discharge or load 350 vehicles from/to a RO/RO ship.

(e) At inland terminals can perpetuate cargo documentation and redocument diverted or reconsigned cargo.

(f) During container operations can stuff and unstuff containers. However, this capability degrades other capabilities.

Downloaded from http://www.everyspec.com

(2) The columns under Levels 2 and 3 adapt this table for reduced operational capabilities in decrements of 10 percent, from approximately 90 percent for Level 2 to approximately 80 percent for Level 3.

(3) This unit is not adaptable to Type B organization.

(4) The columns designated by Levels 1 through 3 are designed to relate to categories established in AR 220-1, Unit Status Reporting.

(5) Individuals of this organization can assist in the coordinated defense of the unit's area of installation.

(6) This unit performs unit maintenance on organic equipment except communications security equipment.

e. **Port Operation Cargo Detachment.** The transportation port operations cargo detachment augments the Cargo Transfer Company. It is employed to discharge equipment and supplies at a water port. The immediate requirement is to discharge supplies prepositioned in barges. Then it assists in the discharge of Corps.

Follow-on units or contract support/HNS under MTMC, assume cargo handling operations at the SPODs during the sustainment phase and theater development. The cargo transfer companies become available to corps and division units requiring additional CHE or MHE to meet surge requirements. The detachment is task-organized to continue work with MTMC or another support activity, during the sustainment phase.

1-5. RESPONSIBILITIES OF THE MILITARY SEALIFT COMMAND. The MSC is the single agency assigned to manage worldwide ocean transportation for DOD cargo to support US forces during peacetime and contingencies. MSC is composed of three separate forces: the Strategic Sealift Force, the Naval Fleet Auxiliary Force, and the Special Mission Support Force. It obtains its shipping capabilities in three main ways:

- Using MSC-owned and operated ships.
- Chartering vessels from commercial steamship companies.
- Activating ships from the RRF.

Accomplish activating RRF ships by commercial operations through GAA contracts with the MARAD. Once these ships attain operational status, MSC takes full control and directs all subsequent sealift movements. MSC operates directly under CNO and is responsible for the operation, control, and administration of ocean transportation for all of DOD. It provides vessels to transport cargo and personnel as required by the Army, Air Force, and Navy (excluding those personnel and supplies transported by Navy fleet).

1-6. RELATIONSHIPS BETWEEN TERMINAL UNITS AND MILITARY SEALIFT COMMAND SHIPS. Coordination between Army transportation supervisory cargo-handling personnel and MSC ship's officers is essential in any terminal operation.

Downloaded from http://www.everyspec.com

a. The chief mate is the ship's designated cargo officer who handles most of the problems during loading or discharging operations involving cargo handling, sling, and securing.

b. The ship's master has the final word on any questions pertaining to the safe stowage of cargo aboard ship. Upon arrival, submit the ship's presto plans to the master for his approval. He ensures that the stowage will not adversely affect the cargo or the seaworthiness and safety of the ship.

c. Representatives of the loading cargo-handling units and the ship's master (or his designated officer) will jointly inspect the cargo holds to ensure they are suitable to receive cargo. They also inspect the ship's cargo gear to ensure that it is in safe condition and working order. Inspectors note and correct any (if required) deficiencies or damages to ship's cargo-handling gear prior to starting operations.

d. The loading and/or discharging cargo-handling units handle, stow, and secure all cargo according to the approved stowage plan and safe cargo-handling practices. The MSC assumes responsibility for DOD cargo after it is properly stowed aboard the vessel and accepted by the vessel master. MSCs responsibility for the cargo terminates once the cargo accepts and discharges at the POD. The commander of the terminal making the last discharge from the ship must ensure removal of all military cargo.

e. Command personnel ensure that the terminal operations crew is able to solve problems concerning handling, stowing, shipping, and discharging military cargo. Appendix A contains conversion factors that all terminal operations personnel must know.

1-7. RESPONSIBILITY FOR CLEANING CARGO SPACES. Procedures for cleaning cargo spaces are as follows:

a. Upon completion of loading or off-loading, the shipper providing the cargo-handling service must clean the cargo spaces. Clean cargo spaces to the satisfaction of local MSC authorities and the master is necessary. Cleaning usually involves sweeping holds clean and removing refuse, except where carried cargo requires more treatment that is thorough. Do cleaning concurrently with loading or off-loading. When circumstances require ship to sail without cleaning, a representative of MSC or the shipper service must furnish the master with a letter stating the reason the ship is not clean prior to departure.

b. When appropriate, MSC representatives will send messages to other MSC representatives at the port to which the ship is being dispatched. These messages advise them of the unclean condition, the reason for the condition, and the shipper service responsible for cleaning. Representatives of the shipper service at the last port, and at the next port to which the ship is being dispatched, will also receive the message.

c. The MSC determines if cleaning is to be done by the responsible shipper service upon arrival or by the ship's complement en route. If en route cleaning is determined to be operationally necessary or more economical, the cognizant MSC representative advises the vessel master. If other factors permit, the ship's crew will clean the ship.

d. When an unclean ship arrives, cognizant MSC representatives inspect the ship, advise the responsible shipper service of its condition, and request the cleaning and residing of the ship for

Downloaded from http://www.everyspec.com

immediate employment. MSC representatives may defer cleaning until the ship is placed on berth for loading if it is more economical.

e. Should circumstances keep the responsible shipper service from cleaning the cargo spaces, MSC representatives will arrange for cleaning with the ship's master. Cleaning is at the expense of the shipper service. When the nature of the cargo to be loaded does not require cleaning as previously defined, MSC representatives may waive the cleaning requirement or specify to what extent cleaning shall be done.

Section II. Strategic Sealift Ships

1-8. MISSION OF THE STRATEGIC SEALIFT SHIPS. The T-AKR 295 and 296 Class ships make up a portion of the Strategic Sealift Force. The primary mission of these ships is to provide strategic sealift capability in support of the rapid deployment of heavy, mechanized combat units worldwide, including hazardous, explosive, vehicular, containerized, and general cargo. Secondary missions include:

- Rapid resupply of large quantities of mechanized equipment, rations, spare or repair parts, and other cargo as follow-on logistical support to deployed forces.
- Lift capability for follow-on unit equipment and supplies for all uniformed services.

1-9. ORGANIZATIONAL OVERVIEW. The USTRANSCOM and its components execute military transportation programs and policies. Two of those components, the MSC and the MTMC, play a major role in the management of the strategic sealift ships. Basic responsibilities of these two organizations and their deploying units are given below.

1-10. MILITARY SEALIFT COMMAND. MSC is composed of three separate forces: the Strategic Sealift Force, the Naval Fleet Auxiliary Force, and the Special Mission Support Force. The T-AKR 295 and 296 Class ships are part of the current fleet of over 70 Strategic Sealift Ships in the Strategic Sealift Force that carry military equipment, supplies, and petroleum to support US forces overseas.

Although the T-AKR 295 and 296 Class ships are owned and under the administrative control of the Commander, MSC, they are public vessels. Commercial ship contract operators operate, maintain, and repair the T-AKR 295 and 296 Class ships. The contract operators have responsibility for the following:

- Providing qualified ship’s officers and crew.
- Providing operational and technical support ashore.
- Providing the equipment, tools, provisions, and supplies to operate the ships.

The contract operators work closely with the MTMC Port Command representative, the TTB/TTU personnel, and the loading units in determining what and where cargo is to be loaded.

MSC, through the contract operators, is responsible for approving the stow plan and monitoring the loading and lashing of the ship. MSC will assume responsibility for DOD cargo after it is

Downloaded from http://www.everyspec.com

properly stowed and accepted by the ship's master. Likewise, MSCs responsibility terminates once the cargo has been discharged at the SPOD.

1-11. MILITARY TRAFFIC MANAGEMENT COMMAND. MTMC manages worldwide traffic, operates common-user ocean terminals, and offers transportation and transportation engineering advice for DOD. MTMC, like MSC, has a significant role in coordinating the movement of DOD cargo, equipment, supplies, and personnel. MTMC maintains responsibility for the following:

- Ensures transportation readiness in meeting DODs needs for rapid response to national emergencies.
- Monitors the movement of DOD cargo through civilian terminals.
- Provides relocation assistance to DOD families and their personal property.
- Assures the transportability of equipment and the deployability of Army units.

The primary responsibility of MTMC, with respect to the loading and off-loading of the T-AKR 295 and 296 Class, includes the operation of military common-user ocean terminals or the arrangement for the use of commercial ocean terminal facilities when required to satisfy DOD deployment requirements. The MTMC is also responsible for:

- Ensuring that berthing and docking services are provided for shiploading operations.
- Ensuring cargo is received and prepared for loading at the port.
- Preparing the ship stowage plan.
- Staging the cargo.
- Arranging for commercial stevedore support

In general, commercial stevedores handle operations in the CONUS, while military personnel handle operations overseas.

The PSA provides the MTMC terminal commander with administrative, logistical, and support personnel to assist in the on loading and off-loading of military cargo aboard strategic sealift ships.

US Army Transportation TTB/TTUs are Army Reserve units that command and, when necessary, operate ocean terminals and augment peacetime water terminals under the command of MTMC. They are responsible for the cargo load planning and for the shiploading operations. During loading operations, the TTB/TTUs are the primary interface between the ship's crew, the deploying unit(s), and the PSA.

1-12. DEPLOYING UNITS. The deploying units, whose equipment is being loaded, have responsibility for the preparation, transportation, and security of the cargo from its starting location to its port of departure. The deploying units also have responsibility for the supercargo assignments onboard the departing ships and for assisting the ocean terminal commander during loading operations.

For cargo configurations containing a mechanized component, for example, M1A1, Abrams Tank, M2A1, Bradley Fighting Vehicle, a military RO/RO gang may be assigned. A military RO/RO gang, provided by the PSA, is tailored to the type of unit and equipment being loaded. At some civilian terminals, the stevedore services contract or the traditions of the port may dictate that

Downloaded from http://www.everyspec.com

civilian drivers be used. In this case, the PSA must be prepared to train the civilian stevedore drivers in the proper operation of the vehicles.

1-13. SUPERCARGO PERSONNEL. Supercargo personnel are US Army soldiers designated by a deploying unit to supervise, guard, and maintain unit cargo aboard the vessel during surge mode operations. The supercargo assignments also involve security of personal weapons and classified material.

1-14. CARGO MAINTENANCE CREW. While the ship is in the prepositioning mode, a US Army-contracted, civilian cargo maintenance crew will be assigned to the ship. This crew is responsible for the security, maintenance, and repair of cargo aboard the ship. While onboard, the crew is under the command of the ship's master and the crew leader must coordinate all crew activities with the ship's master or a designated representative. Once the ship has undergone the transition from prepositioning mode to surge mode, the crew will be replaced with supercargo personnel.

Downloaded from http://www.everyspec.com

CHAPTER 2

HARBOR FACILITIES AND VESSELS

Section I. Overview

2-1. INTRODUCTION. The first section of this chapter identifies and defines terms used in discussing shipboard functions. It discusses ship classifications, shipping categories, and types of ships terminal coordinators may encounter. The last section in this chapter will provide the ship's configuration and systems of the T-AKR 295 and 296 Class Strategic Sealift Ships, including general ship characteristics; RO/RO area and facilities; LO/LO facilities; miscellaneous ship systems and its two operational modes.

2-2. SHIPBOARD DIRECTIONS. In order to function aboard ship, coordinators must know basic ship terminology. Coordinators should thoroughly understand the common terms used for location, position, and direction aboard ship, and use these terms correctly.

a. The front end of a ship is the bow. Moving toward the bow means going forward. When the vessel is moving forward, it is going ahead. From a direction facing toward the bow, the front right side is the starboard side and the front left side is the port side.

b. The central or middle area of a ship is amidships. The right-center side is the starboard beam, and the left-center side is the port beam.

c. The rear of a vessel is the stern. Moving toward the stern means going aft. When the ship moves toward the stern, it is going astern. From a forward direction the right-rear section is the starboard quarter, and the left-rear section is the port quarter.

d. From the direction of stern to bow, the entire right side of a vessel is the starboard side and the left side is the port side. A line or anything else, running parallel to the length of the vessel is said to be fore and aft; its counterpart, running from side to side, is athwartship.

e. A direction from the centerline of the ship toward either port or starboard side is outboard and either side toward the centerline is inboard. However, the use of outboard and inboard varies when a ship is moored to a pier. Refer to the side against the pier as being inboard; the side away from the pier is outboard. Going down a ladder is going below. Going up the ladder is going above unless headed for the upper deck which means going topside. Going higher, up into the rigging, would be going aloft. Figure 2-1, page 2-2 shows the directional terms as they apply aboard ship.

Downloaded from http://www.everyspec.com

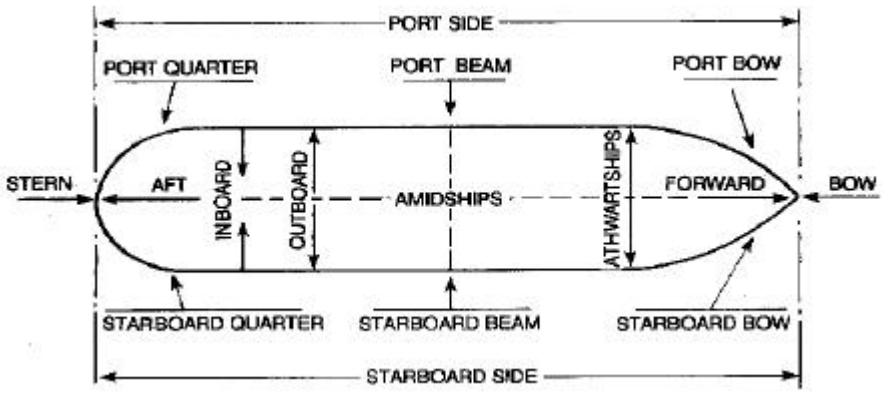

Figure 2-1. Basic shipboard directions

2-3. CARGO COMPARTMENTS. Cargo compartment information is as follows:

a. When stowing cargo, a cargo concerned with space on the upper between deck and with hold storage areas on deck levels below it. Figure 2-2, page 2-3 shows the location of the cargo hold compartments on the vessel.

b. Use the terms hatch and hold when referring to cargo compartments, but in strict terminology, there is a difference. The hatch is the opening in the deck through which the cargo is loaded or discharged. The hold is the lowest compartment under the hatch and is normally used to stow cargo. In general terms, the areas directly below the hatch are the square of the hatch. The areas under the tween deck are called the wings. A wing on the left side of a ship is called a port wing and on the right side it is a starboard wing. The wing toward the bow is the forward wing and the wing toward the rear or stern of the ship is the aft wing. This chapter will refer to names that apply to both hatch and hold compartments.

c. Number cargo compartments beginning at the bow. The numbers progress as they go toward the stern. The number of cargo compartments varies depending on the size or type of ship.

d. Before stowing in a hold, cargo handlers should be familiar with the names and purpose of the various parts of the hold, fittings, and equipment.

Downloaded from http://www.everyspec.com

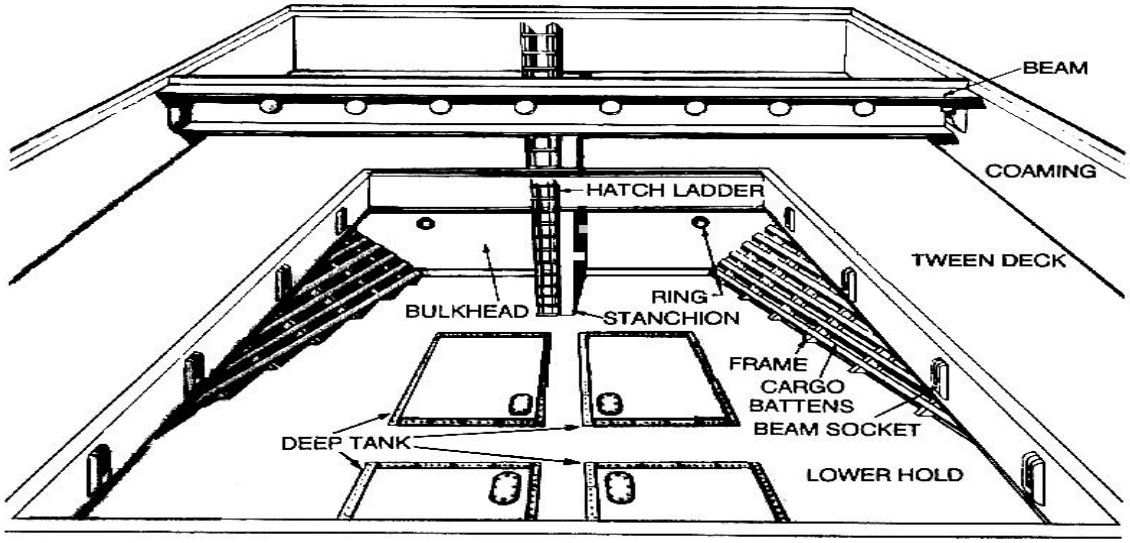

FORWARD HOLD

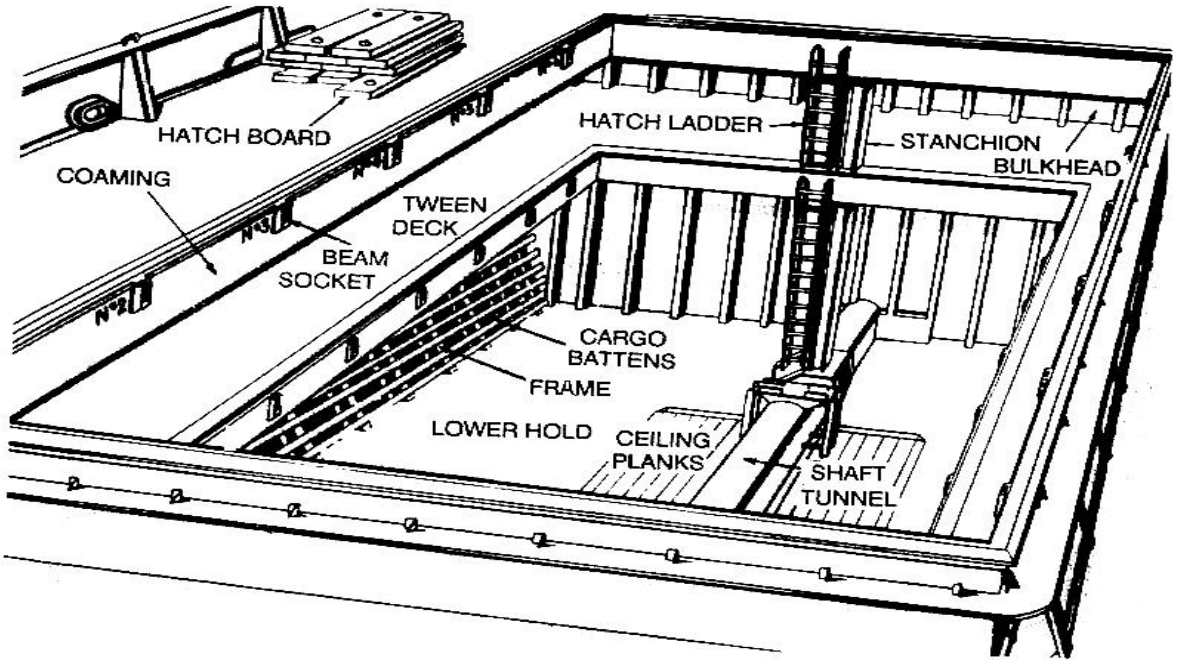

AFTER HOLD

Figure 2-2. Cargo hold compartments

Downloaded from http://www.everyspec.com

2-4. US MARITIME ADMINISTRATION CLASSIFICATION SYSTEMS. The US Maritime Administration Classification Systems are as follows:

a. Maritime Administration vessels are classified by a system based on three groups of letters and numbers. For example, using the group classification C8-S-la the first group indicates the type of vessel (cargo, passenger, and tanker) and its approximate LWL. The second group indicates the type of propulsion, the number of propellers, and whether or not the vessel carries more than 12 passengers. The third group indicates the original design of the vessel or any modifications to the vessel.

b. Table 2-1, shows that the C8 group covers cargo vessels with a length on the load waterline between 700 and 799 feet. Table 2-2, page 2-6 shows that the "S" means the vessel has a single propeller, is equipped with steam propulsion machinery, and carries no more than 12 passengers. Since there may be many vessels with these characteristics, an additional designation is necessary to identify the design of the particular vessel. The vessel designation is 1a. The number "1" means this is the original construction of the la design. The letter "a" indicates that this is the original design of the vessel.

c. If major changes have been made to the vessel, then its designation alters to reflect these changes. For example, suppose that accommodations for 50 passengers are added to this vessel. Since the passengers are still fewer than 100, the first group does not change; it remains C8. The second classification group becomes S1 to indicate that the vessel can carry more than 12 passengers. The third group becomes 1b to show that this is the first major change to this vessel. The vessel designation would become C8-S1-1b.

2-5. SHIPPING CATEGORIES. The Navy Strategic Sealift Program, through MSC, provides the ships and shipboard cargo-handling systems for loading, transporting, and discharging equipment and materiel of the US Armed Forces anywhere in the world. Military units, which support a contingency plan, have predetermined cargo movement requirements. These requirements are provided to the JCS and describe the makeup of the unit, equipment, and supplies to be moved. Units give RDDs that specify the time they are to be in place and ready for combat. Strategic sealift support for any contingency consists of three broad categories for shipping: prepositioned, surge, and resupply shipping.

a. **Prepositioned Shipping** This phase consists of the MPS and other prepositioning ships (formerly called depot ships and NTPS). The MPS carries military cargo and equipment, and is prepositioned near a contingency area. The MPS program consists of 13 self-sustaining ships forward deployed in three independent, prepositioned squadrons. Each squadron carries equipment and 30-day supplies for a MAB. Cargo consists of a balanced load of vehicles and equipment; containers and pallets; fuels, lubricants, and potable freshwater. Each ship is outfitted with ship-to-shore lighterage of powered and nonpowered causeway sections, LCM-8s, and a side-loadable-warping tug. Two squadrons of four ships each will carry vehicles, equipment, and supplies for one-fourth MAB in each vessel. The remaining MPS squadrons will have five ships, each carrying an equal portion of a MAB. Each squadron will serve under the operational control of the US Navy fleet commander in whose area the squadron is located. The other prepositioning ships are strategically located and carry equipment, ammunition, and sustaining supplies for the Army, Air Force, and Navy.

Downloaded from http://www.everyspec.com

Table 2-1. Classification of Ship Type and Length

		Length at Load Waterline (ft)							
	Ship	(1)	(2)	(3)	(4)	(5)	(6)	(7)	Remarks
B	Barge	up to 100	100 to 150	150 to 200	200 to 250	250 to 300	300 to 350	350 to 400	(1)
C	Cargo	up to 400	400 to 450	450 to 500	500 to 550	550 to 600	600 to 650	650 to 700	(1)
G	Great Lakes cargo	up to 300	300 to 350	350 to 400	400 to 450	450 to 500	500 to 550	550 to 600	(1)
H	Great Lakes passenger	up to 300	300 to 350	350 to 400	400 to 450	450 to 500	500 to 550	550 to 600	(2)
IB	Integrated tug-barge	up to 200	200 to 300	300 to 400	400 to 500	500 to 600	600 to 700	700 to 800	(1)
J	Inland cargo	up to 50	50 to 100	100 to 150	150 to 200	200 to 250	250 to 300	300 to 350	(2)
K	Inland passenger	up to 50	50 to 100	100 to 150	150 to 200	200 to 250	250 to 300	300 to 350	(2)
L	Great Lakes tanker (ore or grain)	up to 400	400 to 450	450 to 500	500 to 550	550 to 600	600 to 650	650 to 700	(1)
LG	Liquid gas	up to 450	450 to 500	550 to 600	600 to 650	650 to 700	700 to 750	750 to 800	(1)
N	Coastwise cargo	up to 200	200 to 250	250 to 300	300 to 350	350 to 400	400 to 450	450 to 500	(2)
OB	Combination oil-bulk/ore	up to 450	450 to 500	500 to 550	550 to 600	600 to 650	650 to 700	700 to 800	(1)
P	Passenger (100 or more)	up to 500	500 to 600	600 to 700	700 to 800	800 to 900	900 to 1000	1000 to 1100	(1)
Q	Coastwise passenger	up to 200	200 to 250	250 to 300	300 to 350	350 to 400	400 to 450	450 to 500	(2)
R	Refrigerated	up to 400	400 to 450	450 to 500	500 to 550	550 to 600	600 to 650	650 to 700	(2)
S	Special X	up to 200	200 to 300	300 to 400	400 to 500	500 to 600	600 to 700	700 to 800	(1, 3)
T	Tanker	up to 450	450 to 500	500 to 550	550 to 600	600 to 650	650 to 700	700 to 800	(1)
U	Ferries	up to 100	100 to 150	150 to 200	200 to 250	250 to 300	300 to 350	350 to 400	(2)
V	Towing vehicles	up to 50	50 to 100	100 to 150	150 to 200	200 over			

[1]Larger vessels are designated by successive numbers in 100-foot increments (C8 for 700 through 799 ft, and so forth).
[2]Longer vessels are designated by successive numbers in 50-foot increments (H8 for 600 through 650 ft, and so forth).
[3]The special designation X applies to certain Navy ships built by MARAD and other ships so specialized that they don't fit any other designation.

Downloaded from http://www.everyspec.com

Table 2-2. Classification of Ship Machinery, Propellers, and Passenger Capability

		Passenger Capability	
Machinery Type	Propellers	12 and Under[1]	Over 12[2]
Steam	Single	S	S1
Motor	Single	M	M1
Steam and motor	Single	SM	SM1
Turboelectric	Single	SE	SE1
Diesel-electric	Single	ME	ME1
Gas turbine	Single	G	G1
Gas turboelectric	Single	GE	GE1
Nuclear	Single	N	N1

[1]For triple- and quadruple-screw vessels, add TR or Q respectively to single-screw designation. For example, a triple-screw motor ship is MTR.
[2]For triple- and quadruple-screw vessels, make digit 3 or 4 respectively. For example, quadruple-screw steam is S4.

		Passenger Capability	
Machinery Type	Propellers	12 and Under[1]	Over 12[2]
Steam	Twin	ST	S2
Motor	Twin	MT	M2
Steam and motor	Twin	SMT	SM2
Turboelectric	Twin	SET	SE2
Diesel-electric	Twin	MET	ME2
Gas turbine	Twin	GT	G2
Gas turboelectric	Twin	GET	GE2
Nuclear	Twin	NT	N2

[1]For triple- and quadruple-screw vessels, add TR or Q respectively to single-screw designation. For example, a triple-screw motor ship is MTR.
[2]For triple- and quadruple-screw vessels, make digit 3 or 4 respectively. For example, quadruple-screw steam is S4.

Downloaded from http://www.everyspec.com

(1) The current prepositioning ship program consists of 17 ships (5 break-bulk, 4 LASHs, 4 POL tankers, 3 RO/ROs, and 1 water tanker). Thirteen ships are prepositioned in the Indian Ocean; 2 in the Philippines; 1 in Guam; and 1 in the Mediterranean.

(2) Five of the prepositioned ships store unit equipment supplies for the MAB. Four ships carry Army ammunition and supplies, two ships carry Air Force ammunition, and one ship transports the Navy Rapidly Deployable Medical Facility to support the Marine Corps. The five tankers carry POL and water for all services. The Commander, Seventh Fleet has operational control of these ships, except for the ship in the Mediterranean, which is under the operational control of the Sixth Fleet.

(3) In a combat situation, Navy combat cargo-handling teams will discharge cargoes of the MPS during an initial assault. Army terminal service units will discharge the other prepositioned ships.

b. **Surge Shipping.** Surge ships fill the need for early lift of military cargo. This phrase begins within days of a NCA decision to deploy. At this phase, the terminal service companies and terminal transfer companies play a critical role in the overseas theater of operations. Their response is critical in order to support an overseas military operation requiring great volumes of priority cargo. Surge cargoes consist primarily of unit equipment, wheeled-and-tracked-vehicles, no self-depoyable aircraft, and limited amounts of sustaining supplies and ammunition. Although RO/RO vessels are the preferred type of vessel for the initial movement of combat equipment into developed fixed ports, in a LOTS operation these vessels are difficult to discharge unless they have a LO/LO capability for over-the-side discharge into lighterage. The FSS can sustain a speed of over 30 knots and provide a fast and easy way to accomplish rapid deployment. The FSS (see Figure 2-3, page 2-8) can also rapidly resupply forces, during the resupply phase, that have already deployed with large quantities of mechanized equipment, rations, repair parts, and other cargo. When not in use, keep the FSS in ROS 4. At its layberth, a nine-crew maintains the ship on a full-time basis and performs routine maintenance. In addition, the ship will have at least a 90-percent full load of bunkers. Surge ships also include containerships and crane ship TACS that are maintained in the Ready Reserve Fleet. TACS provide the capability to unload non-self-sustaining ships in the forward area.

c. **Resupply Shipping.** This phase provides the bulk of the sustaining support required by the deployed forces. Forces in the forward areas of operation depend on this shipping to replenish their supplies and increase the theater reserves from a 30- to 60-day level. Resupply shipping begins after the surge shipping requirements have been met and continues for the duration of the operations.

(1) Resupply shipping includes the reuse of the prepositioned ships and surge ships after their initial discharge in the theater of operations. Break-bulk ships at this time will be reactivated from the Ready Reserve Fleet.

Downloaded from http://www.everyspec.com

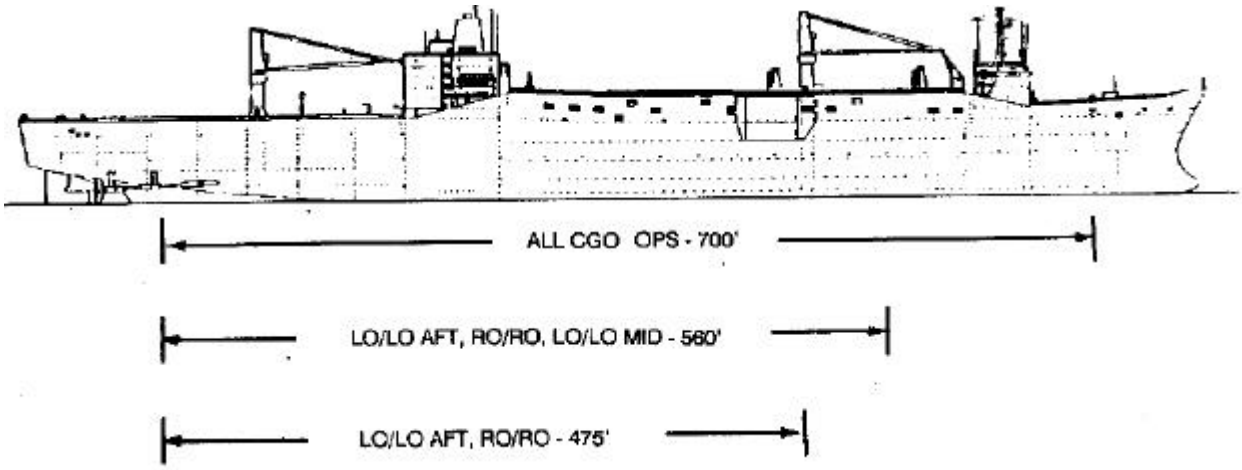

Figure 2-3. Fast Sealift Ship

(2) Break-Bulk ships have always been routinely used for deployed and resupply in the past, that is, during WWII, Korea, and Southeast Asia sealift operations. With their open deck, multiple cargo holds, and service by booms and/or cranes, these ships can lift most military cargoes. These are the most versatile ship types for in-the-steam or LOTS-type operations. The disadvantages of break-bulk ships are that they require the most people for loading and discharging operations and they require the most time to load and off-load. For these reasons, the break-bulk ships are no longer commercially competitive with the containers and RO/RO ships and are being phased out of the commercial trade routes. The government has purchased many of the newer break-bulk ships and put them into the Ready Reserve Fleet for use in an emergency.

2-6. SEALIFT ENHANCEMENT FEATURES PROGRAM. The Navy's SEF program develops and provides equipment and modifications to adapt merchant ships to specific military missions. The majority of American merchant ships are now containerships. The carrying capabilities of these ships are limited to containerized cargo. The SEF program of the Navy develops sea sheds and flatracks to enable these ships to carry vehicles, outsize cargo and heavily lift tracked-vehicles such as an M-1 tank,.

a. **Sea sheds.** Sea sheds are 40 feet long, 24 feet wide, and 12 feet 5 inches high. They weigh about 72,000 pounds and fit into containership cells. One sea shed can occupy the space of 4-1/2 40-foot containers. Sea sheds provide temporary multiple decks in containerships for transporting large military vehicles and outsize break-bulk cargo that cannot fit into containers. Figure 2-4, shows installation of the entire sea shed system.

(1) A CCSA is a three-part system, which provides a lower cargo hold for heavy, outsize cargo or vehicle. The ship's loading-bearing containers cell guides must be reinforced before this system can be installed.

Downloaded from http://www.everyspec.com

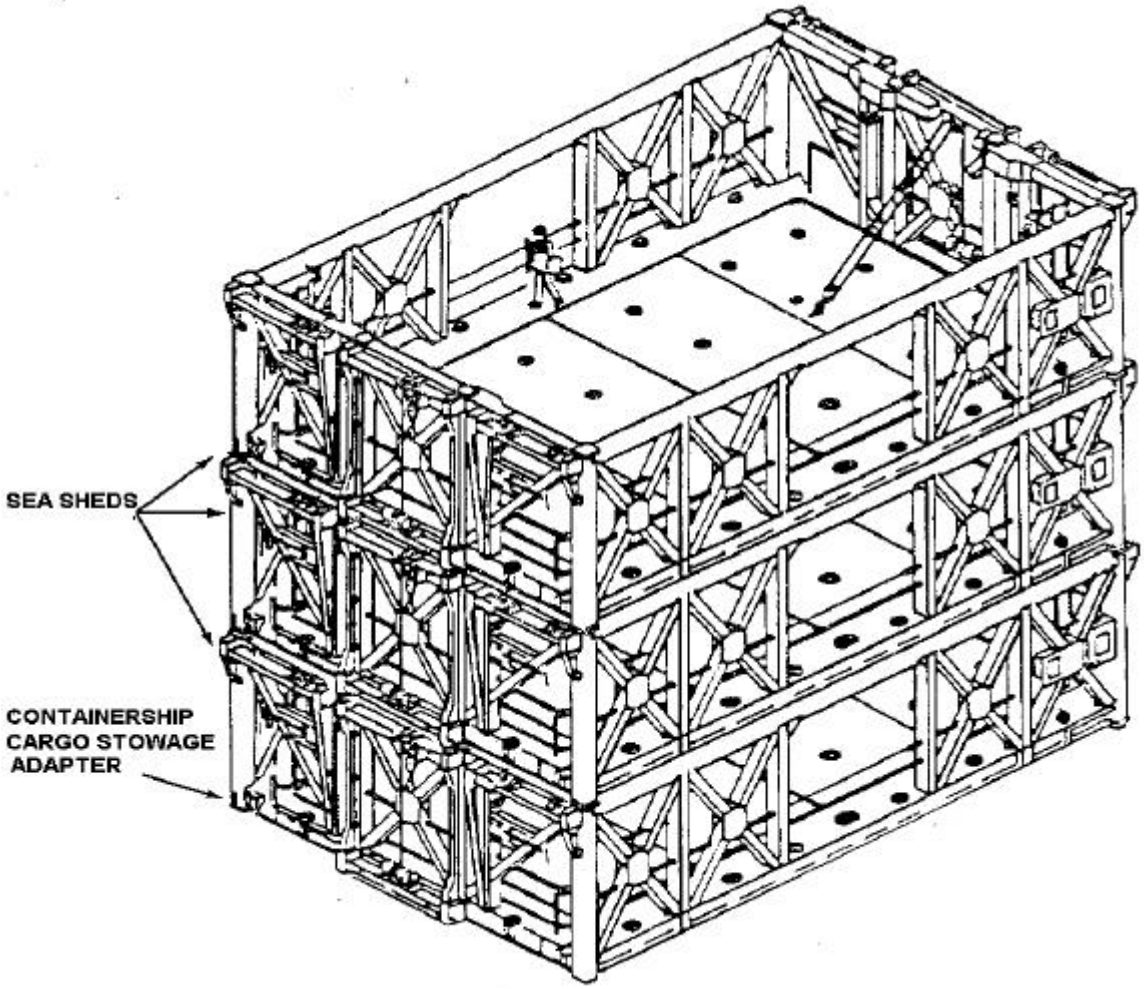

Figure 2-4. Sea shed system

(2) A standard size pontoon is 8 feet by 40 feet by 3 feet (see Figure 2-5, page 2-10) and is put into three adjacent container cells and sets on top of the tank tops. This arrangement provides the reinforced decking required for heavy lift cargo and cargo tie-downs. The CCSA is inserted over the pontoons in the three adjacent container cells. Figure 2-6, page 2-10 shows three versions of the containership and the CCSA, and various combinations for loading containers and other cargoes.

Downloaded from http://www.everyspec.com

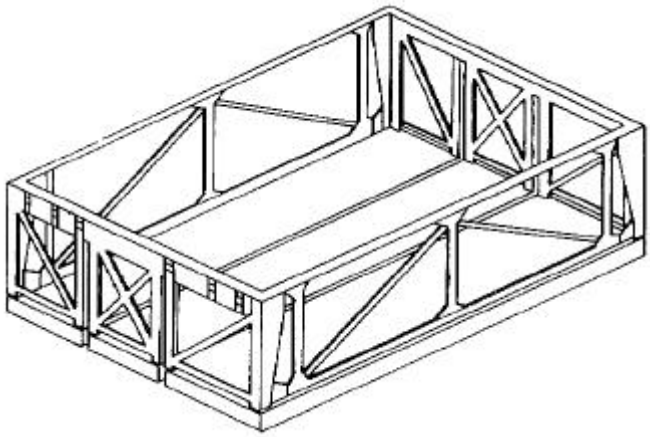

Figure 2-5. Conceptual sketch of the heavy-duty pontoons flats

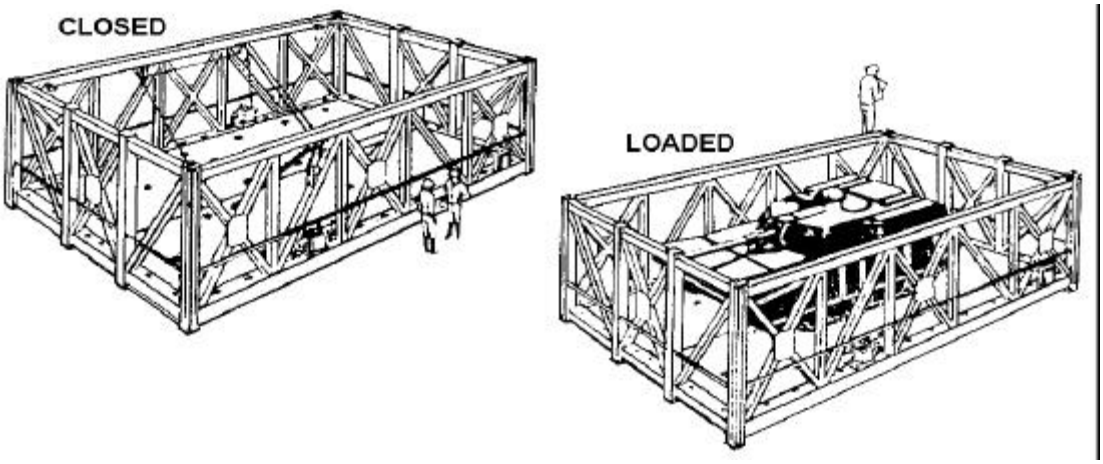

Figure 2-6. CCSA/sea shed and container compatibility

(3) Sea sheds are open-topped and have two bi-panel self-activated, folding work-through floor sections. These sections can accommodate cargo up to 30 feet by 18 feet. Sea Sheds can be stacked below deck, three high on top of the CCSA. With all the floors opened, personnel can load the sea sheds lower deck first, closing the floor over each successively loaded unit (see Figure 2-7). The rated capacity of the sea shed is 100 tons, and it can accommodate aircraft, vehicles, and outsize break-bulk cargo. The cargoes are blocked, braced, and tied down in the same manner as in a general cargo hold.

NOTE: The ship's personnel will open and close the folding work-through floor sections.

Downloaded from http://www.everyspec.com

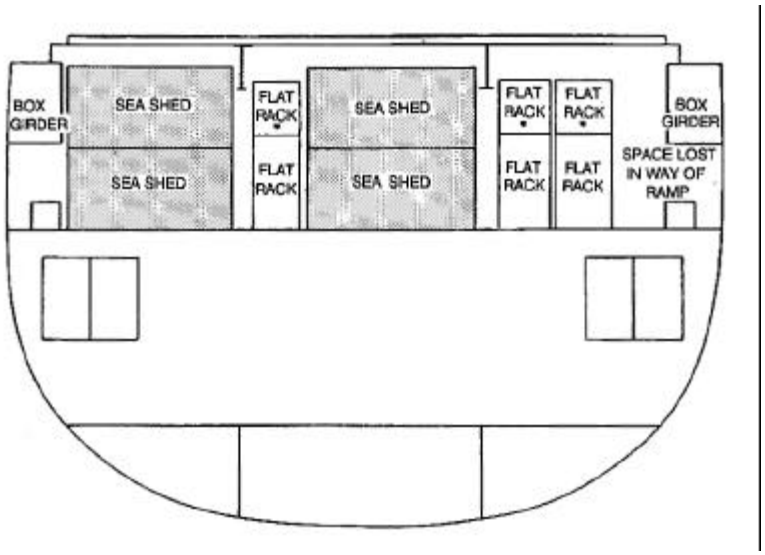

Figure 2-7. Sea sheds stacked and loaded in containership hold

(4) Sea sheds for commercial containerships are prepositioned ashore at sites closest to predesignated military outloading ports. Each fast sealift ship T-AKR carries eight 35-foot sea sheds. Sea sheds do not require handling during loading operations. They can be retained aboard ship, as long they are needed to enhance the military utility of commercial containerships.

b. **Flatracks.** Flatracks are portable, open-topped, open-sided units which fit into existing below deck container cell guides. By augmenting sea sheds, flatracks maximize the capability of containerships to lift outsize military cargoes (see Figure 2-8, page 2-12).

(1) Standard commercial flatracks are limited to a maximum gross weight of 30 tons. The newly developed heavy-duty flatracks, which are part of the SEF program, have a 60-ton capacity, roughly the equivalent weight of an M-1 tank. These flatracks may be used as single units or combined horizontally in sets, or they may be stacked vertically. When placed side-by-side, the folding plates on the right-hand side of the flatracks are laid over to the next flatrack so that vehicles can cross from one flatrack to the other.

(a) The platform is 8 feet by 40 feet by 30 inches. It is a steel structure frame with wood decking.

(b) Five side flaps on the right-hand side of the flatrack bridge the gap between flatracks. They can support a total load of 20,000 pounds on a two-square foot area.

Downloaded from http://www.everyspec.com

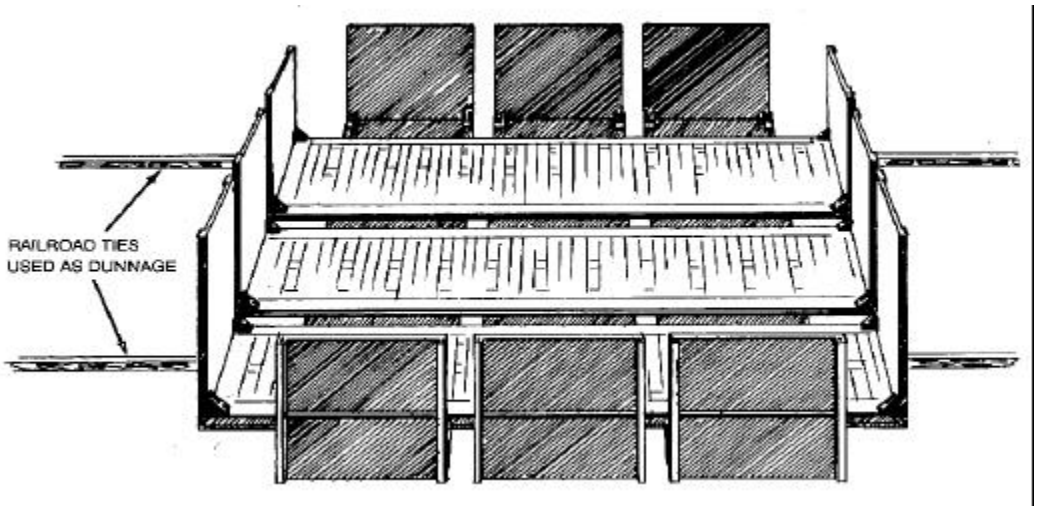

Figure 2-8. Flatracks

(c) D-rings are used for deck tie-down to support the capacity load subjected to a 20-degree roll, with a 13-second roll period and three units stacked in the hold. The D-rings have a 10,000-pound holding strength.

(d) Forklift pockets are 14 foot by 4-1/2 foot openings, by which a RTCH with forks can transport an empty flatrack.

(e) The gooseneck tunnel is for transporting the flatrack on a chassis in an empty or normal load condition (not to exceed 67,000 pounds).

(2) The end posts on an empty flatrack can be lowered and laid flush on the platform when they are stowed ashore or aboard ship. When the flatracks are in use, the end posts are raised and locked in position. The end posts in their compressed stage have a maximum high of 8 feet 6 inches above the platform. Depending on the height of the cargo to be loaded, the end posts can be rated in 6-inch increments to a maximum height of 13 feet 6 inches above the platform.

NOTE: The heavy-duty flatrack must be on the pier for setting up, and raising or lowering the end post.

(3) The 40-foot heavy-duty flatrack has three load conditions.

(a) Empty condition -- no cargo.

(b) Normal load condition -- cargo loaded aboard with a maximum gross weight of less than 67,000 pounds.

(c) Heavy load condition -- cargo loaded aboard with a maximum weight greater than 67,000 pounds but not more than 137,000 pounds.

Downloaded from http://www.everyspec.com

(4) An empty flatrack weighs 21,000 pounds. The RTCH with forks can lift and transport the flatracks. If the flatrack has its end posts up, use the top handlers to lift and transport the flatrack.

(5) The flatrack can be lifted with the end posts erect or stowed when in an empty or normal load condition. Never attempt to lift the flatrack in a heavy load condition. The flatrack should be lifted and placed in the cell in an empty condition and then loaded.

(6) Figure 2-9 shows three heavy-duty flatrack units side-by-side in a container cell with their end posts in the extended position, and loaded with two M-1 tanks. When flatracks are positioned vertically, the flatrack must be removed from the cell after cargo is discharged so that the cargo in the flatrack below will be accessible.

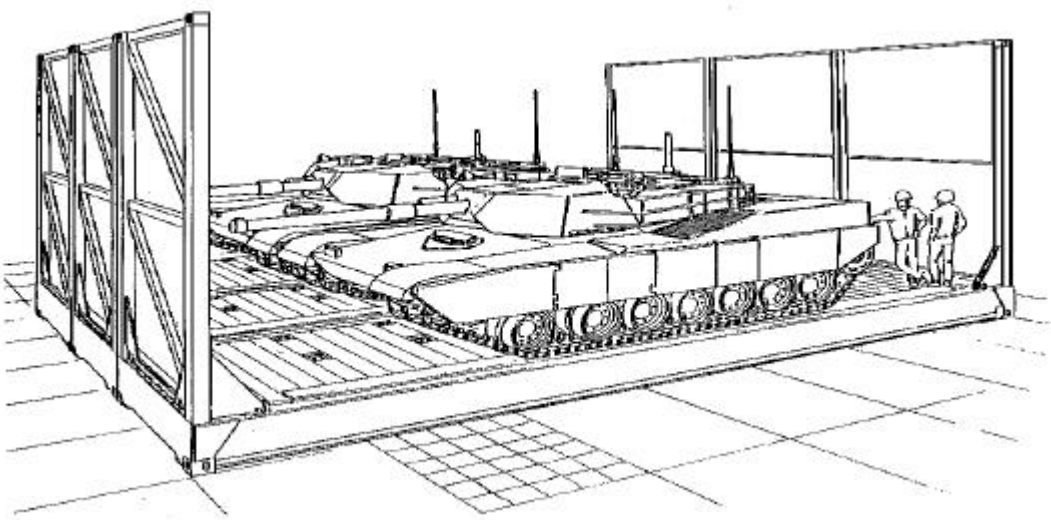

Figure 2-9. M-1 tanks loaded on flatracks

(7) If the flatracks are kept aboard the containership after it has been discharged, then the end posts are lowered and the flatracks are stowed in an empty cell aboard the ship. Otherwise, they can be stacked in the terminal's holding area. Each of the T-AKRs will carry 78 heavy-duty flatracks.

2-7. READY RESERVE FORCE. The RRF program provides assured, responsive shipping to support the deployment of military forces. The current Navy program will place 116 ships in the RRF by FY1991, which will include 100 dry cargo ships (including 12 TACS). Ships in the RRF will be maintained in either a five-, ten-, or twenty-day readiness status by the MARAD at NDRF sites or designed outports. Ships in the RRF have a high degree of military utility. Usually these ships are longer commercially competitive in the liner trade, but have a significant amount of remaining useful life. Selected ships are upgraded from the NDRF and some ships are retired from active MSC service.

Downloaded from http://www.everyspec.com

Section II. T-AKR 295 and 296 Class Ship Configurations

2-8. GENERAL SHIP CHARACTERISTICS. The T-AKR 295 and 296 Class Strategic Sealift Ships were designed to permit simultaneous RO/RO and LO/LO operations (Tables 2-3 and 2-4), with minimal cargo flow interference, using the slewing stern ramp, the sideport ramp, and the single-pedestal twin cranes. They were designed to be self-sustaining for RO/RO and LO/LO cargo operations both pierside and in the stream (up to Sea State 3). In-the-stream RO/RO operations should be conducted using both the stern and sideport ramps with RO/RO discharge facilities RRDFs. To support LO/LO operations, the cranes and associated equipment were designed to compensate for load rotation, load swing, and vertical motion. In-the-stream LO/LO operations should be conducted using either on-site assets or onboard powered and non-powered lighterage. Ramp locations and the internal flow of vehicle traffic permit vehicle transit between all cargo stowage areas and the slewing stern ramp and sideport ramp systems.

Table 2-3: T-AKR 295 Class Principal Characteristics

Principal Characteristics

Length Overall		906.9'
Length Between Perpendiculars		850.8'
Depth to Weather Deck		90.9'
Beam (Molded)		105.6'
Design Load Draft		34.6'
Scantling Draft		37.0'
Air Draft		132.0'
Displacement (with 15,205 LT cargo)		55,123 LT
Accommodations:	Crew	40
	Super Cargo	50
	Spares	5
Helicopter Facility:	Day and emergency only; CH-47D and CH-53E capable	

Cargo Characteristics (ft^2)

Enclosed Fixed Decks		228,331
Enclosed Hoistable Decks		32,448
Weather Decks		51,682
	Total	312,461

Propulsion Characteristics
Single Shaft
Low-Speed Diesel, 12 Cylinder, 2 Cycle, B&W 12L90GFCA
46,653 BHP at 97 RPM
Fixed-Pitch Propeller, 6 Blades, Diam. 24.6'

Endurance at 24 Knots (Range) 12,000 NM

Electrical Characteristics: SSDG - 7
Total capacity - 12,540 KW

Fuel Characteristics: Type - IFO/3,924 LT & DFM
Capacity - 868 LT

Downloaded from http://www.everyspec.com

Table 2-4: T-AKR 296 Class Principal Characteristics

Principal Characteristics		
Length Overall		956.0'
Length Between Perpendiculars		894.6'
Depth to Weather Deck		89.2'
Beam (Molded)		105.9'
Design Load Draft		36.1'
Scantling Draft		37.0'
Air Draft		134.8'
Displacement (with 15,205 LT cargo)		57,792 LT
Accommodations:	Crew	40
	Super Cargo	50
	Spares	5
Helicopter Facility:	Day and emergency only; CH-47D and CH-53E capable	
Cargo Characteristics (ft^2)		
Enclosed Fixed Decks		228,289
Enclosed Hoistable Decks		55,775
Weather Decks		49,991
Total		334,055
Propulsion Characteristics		
Center Shaft		
Low-Speed Diesel, 12 Cylinder, 2 Cycle, B&W 12K84EF		
26,000 BHP at 109 RPM		
Controllable-Pitch Propeller, 4 Blades, Diam. 21.33'		
Port and Starboard Shafts (each)		
Low-Speed Diesel, 9 Cylinder, 2 Cycle, B&W 9K84EF		
19,500 BHP at 109 RPM		
Fixed-Pitch Propeller, 6 Blades, Diam. 19.19'		
Endurance at 24 Knots (Range)	12,265 NM	
Electrical Characteristics:	4 SSDGs; 2,750 KW ea. Total capacity 11,000 KW	
Fuel Characteristics:	Type/Capacity DFM/5,221 LT	

a. **Cargo Stowage Areas.** Cargo stowage areas for T-AKR 295 and T-AKR 296 Class Ships are as follows:

(1) ***T-AKR 295 Class ship.*** Four cargo holds (Hold 1, Hold 2, Hold 3, and Hold 4) are located forward of the main machinery space and one cargo hold (Hold 5) is located aft of the main machinery space. Weathertight cargo hatches for Holds 2, 3, and 4 are located on 01 Deck (weather deck). The cargo hatchways for Holds 3 and 4 provide access to E Deck, while hatchways for Hold 2 provide access to D Deck. No hatch or hatchways are provided for LO/LO access to Holds 1 and 5. In addition, weather deck cargo space is available on the 02 Deck, aft of the superstructure. (See Figure 2-10, page 2-16 for Inboard and Outboard Profile.)

Downloaded from http://www.everyspec.com

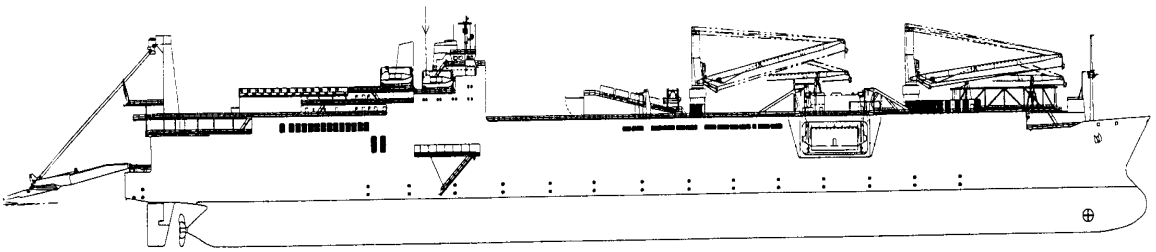

OUTBOARD PROFILE

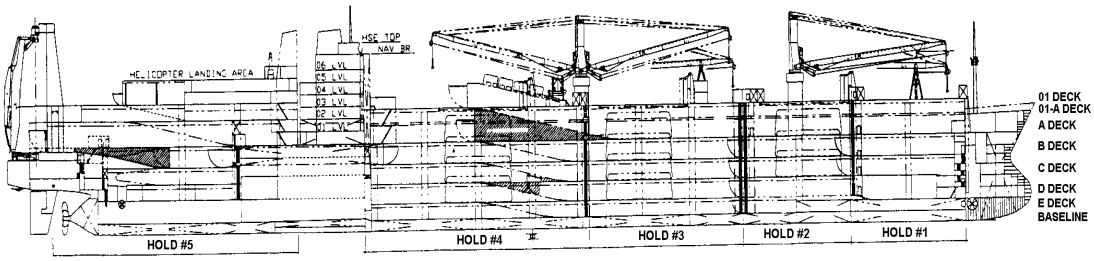

INBOARD PROFILE

Figure 2-10. T-AKR 295 Class Inboard and Outboard Profile

(2) ***TAKR-296 Class ship.*** Three cargo holds (Hold 1, Hold 2, and Hold 3) are located forward of the main machinery space, and on four cargo holds (Hold 1, Hold 2, Hold 3, and Hold 4) are located forward of the main machinery space and one cargo hold (Hold 5) is located aft of the main machinery space. Weathertight cargo hatches for Holds 2, 3, and 4 are located on 01 Deck (weather deck). The cargo hatchways for Holds 3 and 4 provide access to E Deck, while hatchways for Hold 2 provide access to D Deck. No hatch or hatchways are provided for LO/LO access to Holds 1 and 5. In addition, weather deck cargo space is available on the 02 Deck, aft of the cargo hold (Hold 4) is located aft of the main machinery space. Weathertight cargo hatches for Holds 1, 2, and 3 are located on A Deck (weather deck). The cargo hatchways provide access to the lowest cargo decks. No hatch or hatchways are provided for LO/LO access to Hold 4. (See Figure 2-11, for Inboard and Outboard Profile.)

In addition, covered cargo stowage space has been provided within the ship's superstructure and in an enclosed area on A Deck in Hold 3. There is also weather deck cargo space available on the 02 Level, directly forward of the superstructure.

Downloaded from http://www.everyspec.com

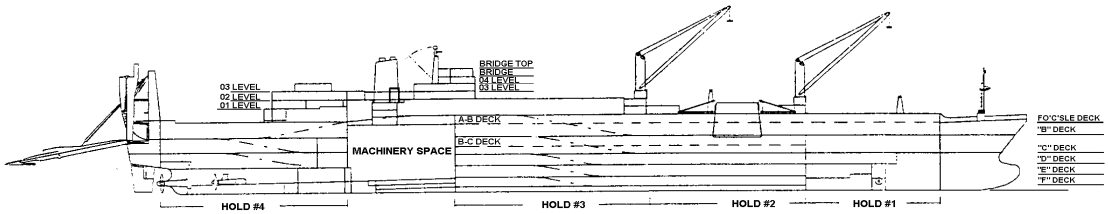

INBOARD PROFILE

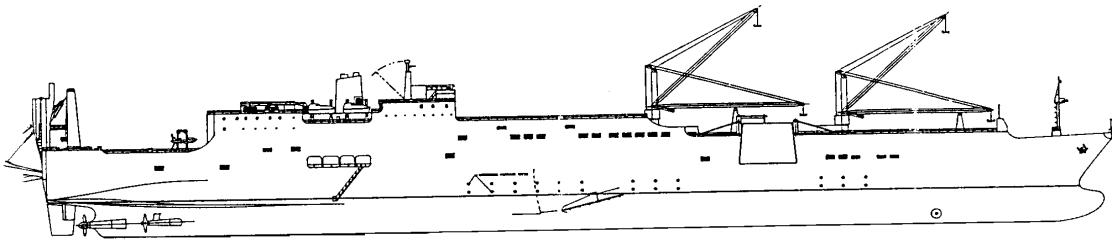

OUTBOARD PROFILE

Figure 2-11. T-AKR 296 Class Inboard and Outboard Profile

b. **Fire Extinguishing.** There are several fire extinguishing systems on the T-AKR 296 Class ships. These include fixed, high-pressure CO_2 systems that protect the emergency diesel generator room, paint locker, incinerator room, pump room, and the bow thruster room; a fixed, refrigerated, low-pressure CO_2 system that serves the main machinery space and auxiliary machine room number 2; a USCG-approved, 3-percent-foam system that serves the cargo stowage areas and main machinery space; foam hose reels for the helicopter landing facility; aqueous potassium carbonate systems for each deep fat fryer in the galley; and portable CO_2 and dry powder extinguishing systems throughout the ship.

(1) The cargo stowage areas have the following fire extinguishing systems:

- fire stations,
- foam hose reels, and
- foam sprinkling system.

(2) The interior cargo stowage areas have fixed-sprinkler systems that can apply foam from above with a low-level foam-making system. Sprinkling above the hoistable decks can be isolated when the deck is raised. Sprinkling from below hoistable decks for the fixed deck level underneath is achievable with the hoistable deck in either position. Exterior cargo stowage areas have sprinkling systems with low-level foam.

(3) Activation and control switches for each fixed-sprinkling zone are provided locally (at an access to the cargo hold being served) and remotely from DCC. The activation of any sprinkling zone or hose reel results in the activation of the foam proportioners, concentrate pumps, seawater pumps, and the alignment of system valves. Remote controls for starting and stopping the concentrate transfer pumps are available at the foam proportioner units. System

Downloaded from http://www.everyspec.com

piping is also provided with low-point drains and isolation valves that have drainage for any piping exposed to the weather.

(4) The foam-hose reels are located at personnel access doors to the cargo stowage areas and vehicle ramps. The reels are capable of reaching any point of the cargo stowage area with at least two hoses. Activation controls are provided at each hose reel. Portable fire extinguishers are also available throughout the ship and in every cargo hold area.

c. **Receptacles.** General purpose 115-volt, 15-ampere, duplex receptacles -- Electrical 115-volt explosion proof receptacles have been provided throughout the enclosed cargo stowage areas. Outlets are interlocked with the ventilation fans, serving the respective area, to prevent the energizing of the receptacles unless the fans are operating. Each hold contains five outlets which are located in the following general locations:

- One is located near the cargo hold's stairtower.
- Two are located in the forward section of the cargo hold, one port and one starboard.
- Two are located in the aft section of the cargo hold, one port and one starboard.

The cargo hold receptacles have ventilation interlocking switches. They are 450-volt, 30-ampere, 60-Hz, three-phase, 4-pin, watertight receptacles. These receptacles have been specifically installed for submersible pumps and for portable welding sets. They may, however, be used for other electrical equipment as well. Receptacles are located at each personnel and cargo access from the weather deck to the lower decks. All receptacles are locally grounded.

d. **Container Receptacles.** Watertight, combination-interlocked, circuit-breaker receptacles have been provided for 30 refrigerated containers. They are located between frames 230 and 244 on the weather deck (A Deck), near electrical equipment room number 2, and are situated to allow for easy connection once the container has been stowed on the deck. All of these receptacles have been grouped together to prevent interference with RO/RO operations. The refrigerated container receptacles are 4-pin (3-hole, 4 wire) grounded sockets, in accordance with ISO Standard 1496-2, Annex M.

e. **Compressed Air.** Ship service air stations are located throughout the cargo holds and on the weather deck to facilitate maintenance, repair, and tire inflation of cargo vehicles.

f. **Lighting.** The internal cargo stowage area lighting fixtures are high-pressure sodium, high-intensity lights. On average, the lighting in these areas is 10.0 foot-candles. The light fixtures are shielded to prevent blinding on approach from areas below.

Floodlights are also provided to illuminate the stern and sideport ramps. These shielded floodlights illuminate the driveway to prevent blinding on approach from above and below.

g. **Cargo Hold Drainage Systems.** There are two cargo stowage area drainage systems provided: an oily waste transfer system for the cargo holds during normal operations and a dewatering system for casualty situations such as fires or floods. Both systems use common drain wells. The systems consist of deck drains located in each corner of the cargo holds on all decks. They are combined and lead down to a drainage well in the double bottom. There are also freeing port deck drains on B Deck and above. They permit normal

Downloaded from http://www.everyspec.com

housekeeping flow to drain to the WWDC tanks' drain wells. Any excess flows from large spills will discharge overboard. The amount of fluid drained into the individual WWDC drain tanks' drain wells determines the operation of the system. It will operate either in the housekeeping mode or in the casualty mode.

(1) ***Oily Waste Transfer System.*** The oily waste transfer system is designed to take small accumulations of fluids from the cargo hold bilge wells, pump it to the oily waste holding tank, process the fluid through an oily water separator and then discharge the water effluent overboard and the oil effluent into the waste oil tank.

(2) ***Cargo Hold Dewatering System.*** The cargo hold dewatering system is capable of handling large amounts of vehicle fluids, firefighting foam, and seawater. In cargo holds with ramps, the system is configured in conjunction with the fire zones. The dewatering system has three modes of casualty operation: fire, flooding/collision, and fuel spill.

- *Fire.* When the foam-sprinkling system activates, the dewatering system pumps take suction from the WWDC drain tanks and discharge directly overboard. The decks above the bulkhead deck are drained overboard by the non-return freeing ports. Dewatering is not started, however, until after the foam system has been in operation long enough to establish a foam blanket.
- *Flooding/Collision.* In the event of flooding or a collision in the cargo hold,the dewatering system operates in much the same manner as in a fire. (See description of this operation in the paragraph above.)
- *Fuel Spill.* In the event of an oil spill caused by: a leak in the fuel tank of a vehicle, overfilling a tank while fueling the forklifts, leaking lube oil from vehicles or cargo-handling equipment, or over-accumulation of other petroleum products, the oily waste transfer system will operate in the housekeeping mode. In the event of a major spill such as the rupture of a tanker truck or trailer carrying JP-8, the accumulation of fuel in the drain tanks could exceed the pumping rate or holding capacity of the oily waste transfer system. The drain collection tanks are equipped with high level alarms, which will alert the crew to this situation, at which point the dewatering pumps activate and the spillage pumped overboard.

h. **Alarm and Indicator Systems.** The ship has several alarm and indicator systems. These include: carbon monoxide and combustible gas; ventilation; smoke and heat detecting; flooding; and watertight door indicator alarm systems.

(1) ***Carbon Monoxide and Combustible Gas Alarm System.*** A carbon monoxide, hydrocarbon, and combustible gas detector system is provided in all cargo stowage areas. The system has enunciators in the EOS, DCC, bridge, and quarter-deck stations. The ship also has a centralized catalytic-sampling system with calibration span gas. This system samples the air in cargo spaces below deck continuously and sounds an alarm if the concentration of carbon monoxide or combustible vapors reaches an unsafe level.

(2) ***Ventilation Alarm System.*** A ventilation alarm system activates audible and visual alarms when the airflow decreases below a certain user-selected level in compartments where the possible leakage of hazardous materials presents a threat of fire, explosion, or a toxic hazard. The system consists of an airflow sensor and alarm in the cargo holds and remote alarms located in the EOS and DCC.

Downloaded from http://www.everyspec.com

(3) ***Smoke and Heat-Detection Alarm System.*** Cargo spaces are provided with remote smoke and heat-detection alarm systems. Enunciators are located in the EOS, DCC, bridge, and quarter-deck stations.

(4) ***Flooding Alarms.*** Flooding alarms are provided for each cargo hold. Enunciators can be found in the EOS, DCC, and quarter-deck stations.

i. **MISCELLANEOUS SYSTEMS.** The following miscellaneous ship systems are important for cargo operations: refueling station, list control system, small arms and ammunition locker, cargo battery recharging station, vehicle fresh water stations, and the helicopter landing facility.

(1) ***Refueling Station.*** A cargo-handling truck and lighterage refueling station is located outside the stern door. The station has been fitted with a 250-foot reel hose and receives its fuel supply from the ship's diesel-fuel service tank via a dedicated transfer pump. Pump shutdown controls are located at the station.

(2) ***List Control.*** The ship has an automatic list-control system for use during RO/RO and LO/LO operations. Except for filling and dewatering the dedicated tanks, the automatic list-control system is separate from the seawater ballast system and is capable of transferring seawater between dedicated tanks.

The system has the capacity to prevent a change in list angle due to either of the following situations:

- When one M1A1 tank is traveling athwartship, at the maximum beam, in 1 1/2 minutes.
- When lifting the warping tug from the weather deck on the ship's centerline to 25 feet outboard of the side of the ship at the maximum beam within 2 1/2 minutes.

The system's automatic controls are located in the EOS. The filling and dewatering of these tanks are done through the seawater ballast system using valves that remain locked and closed under normal conditions.

(3) ***Ammunition and Small Arms Stowage.*** The vehicle weapons stowage area is located on the centerline of B Deck, between frames 127 and 116. A clear deck height in excess of 6 feet 6 inches has been provided, specifically for vehicle weapons stowage. Small arms and COMSEC material stowage are accessible from the interior of the ship. The small arms stowage area is located on the 01 Level on the starboard side between frames 78 and 74. The small arms stowage area contains a small arms locker and two small arms ammunition lockers. Supercargo personnel will store their small arms and small arms ammunition in this area. The COMSEC storeroom is used to store vehicle communications gear. The COMSEC storeroom is located on the starboard side of 01 Level between frames 78 and 81, next to the small arms locker. Bulk stowage of ammunition and explosives can occur below the weather deck, only if stowed in accordance with IMDG regulations.

(4) ***Cargo Batteries Facilities.*** A facility for the storing and charging of

Downloaded from http://www.everyspec.com

vehicle batteries has been provided on the portside of A Deck between frames 28 and 34. Battery stowage is provided for 50 vehicle batteries (type 6TL). The battery charging facility can simultaneously charge 10 vehicle batteries within 20 hours.

(5) ***Fresh Water for Vehicles.*** Fresh water service is provided in the cargo stowage areas to fill the vehicle engine cooling systems. This is achieved by distributing water from the potable water system with hose reels that are provided in each station. Nozzles for each hose are provided to add water to the vehicle engine cooling systems and to fill the portable containers.

(6) ***Vehicle Washdown Stations.*** During the backload operations, all vehicles are required to be washed. Six fresh-water washdown stations are fed by a fresh-water system that provides 400 gallons of water a day for vehicle washdown. These freshwater stations have hose reels with 100 feet of hose and a high-velocity spray gun. Two are located adjacent to the stern door and two are located adjacent to each sideport. In each case, they are located on opposite sides of the door.

(7) ***Helicopter Landing Facility.*** A day-only, visual-meteorological-conditions, emergency landing capability is provided through the helicopter landing facility located on the 02 Level, forward of the deckhouse. The facility is certified by the ABS and is in accordance with USCG NVIC 9-81. The helicopter landing facility has been configured to land CH-47D and CH-53E helicopters. When required, the helicopter landing facility may serve as a cargo stowage area. The helicopter landing facility is outfitted with foam hose reels fitted with non-collapsible hose and variable pattern nozzles and is capable of reaching all parts of the facility.

Downloaded from http://www.everyspec.com

PART TWO

GEAR AND EQUIPMENT

CHAPTER 3

SHIP'S GEAR AND RIGGING PROCEDURES

Section I. Ship's Gear

3-1. INTRODUCTION. This chapter covers various types of ship's gear and discusses its safe operation. Terminal operations personnel must know the proper terms and concepts in order to understand this chapter.

3-2. CHAINS, HOOKS, AND SHACKLES. Information on chains, hooks, and shackles is as follows:

a. **Chains.** Chains are used in cargo-handling operations for slinging loads and lashing cargo and as part of the ship's rigging.

(1) Chains are made up of a series of metal links formed into oval shapes and connected through each other. The chain size refers to the diameter of the metal link. Chains will stretch due to overloading and the individual links will bend slightly. Bent links are a warning that the chain has been overload. Overloading could cause the chain to fail. If a chain is equipped with the proper book, the hook should start to fail first, indicating that the chain is overloaded.

(2) Chains are much more resistant to abrasion and corrosion than wire rope; therefore, chains are used where this type of deterioration is a problem. For example, chains are used for anchor gear in marine work where the chains must withstand the corrosive effects of seawater. They are also used as slings to lift heavy objects with sharp edges which would cut wire. A number of grades and types of chains are available.

b. **Hooks**. There are various types of hooks. The types are as follows:

(1) *Cargo hooks*. Chains, fiber rope, or wire rope can be tied directly to the load. However, for speed and convenience it is much better to fasten a hook to the lifting line. Cargo hooks are shackled to the cargo runners for lifting and lowering drafts of cargo. The hooks most frequently used in cargo-handling operations are the new york cargo hook, the liverpool hook, and the seattle hook.
Figure 3-1 shows these three types of hooks.

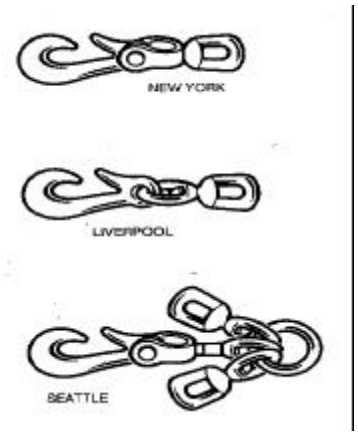

Figure 3-1. Cargo hooks

Downloaded from http://www.everyspec.com

(a) The new york cargo hook is a dropforged steel, natural-colored hook, fitted with a jaw-and-eye swivel.

(b) The liverpool hook is a dropforged, natural-colored steel hook, fitted with a double-eye swivel. This hook is included in the general-hatch set and has a safe working load of 11, 200 pounds.

(c) The seattle cargo hook is a dropforged steel, natural-colored hook, fitted with one jaw-and-eye swivel, two double-eye swivels, and a ring. It may also have a double-eye swivel in lieu of the jaw-and-eye swivel. This hook is included in the general-hatch cargo set and has a safe working load of 11,200 pounds.

(2) *Sling hooks*. Hooks can be used in conjunction with slings in many different ways. They can be shackled, moused or spliced into an eye, placed on the sling before the eyes have been spliced to permit the hook to slide, or used with chain slings. Four general types of hooks available for slings are the slip hook, grab hook, box hook, and the chime or drum hook. (See Figure 3-2).

(a) Slip hooks are made so that the inside curve of the hook is an arc of a circle. Cargo handlers may use slip hooks with wire rope, chains, and fiber rope. Chain links can slip through a slip hook so the loop formed in the chain will tighten under a load.

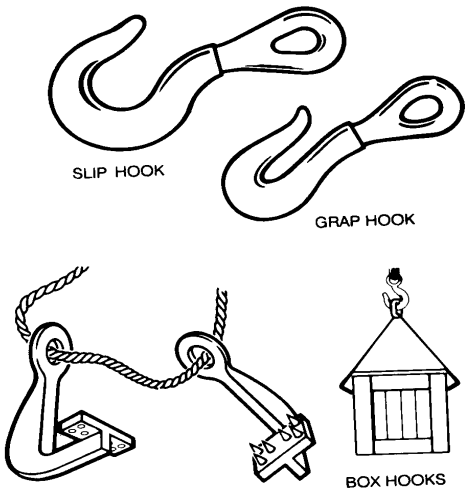

Figure 3-2. Sling hooks

(b) Grab hooks have an inside curve which is nearly U-shaped so the hook will slip over a link of chain edgeways but will not permit the next link to slip through. Grab hooks have a more limited range of use than slip hooks. They are used when the loop formed with the hook is not intended to close up around the load.

(c) Box hooks are heavy steel hooks with a studded steel plate on one end and an opening on the other end through which a sling can pass. Cargo handlers should use box hooks in pairs by attaching them to the sling in such a way that the studded plates are facing each other. When the hooks are positioned on a case or a box and the ends of the sling are placed on the cargo hook, the sling draws the studded plates tightly against the case as it is lifted. Box hooks are designed to lift heavy cases high enough to permit easy slinging. Cargo handlers should never use box hooks on fragile cases.

(d) Chime or drum hooks are forged steel flat hooks with an opening in one end through which a sling may pass. The hooks are used in pairs and placed on the sling so that they face each other. The hook end is designed so that it fits the chimes of barrels or drums. Cargo handlers usually attach the hooks to endless chain slings. Several slings are then shackled into a spreader to form a bridle which will accommodate several drums at one time.

Downloaded from http://www.everyspec.com

c. **Shackles.** Anchor, antitoppling, and chain shackles are the principal types of shackles. Round, screw, and safety pins are the principal types of shackles pin (Figure 3-3). When using shackles, personnel should—

- Make sure pins are straight.
- Make sure that screw pins are screwed in all the way.
- Make sure that nuts on safety pins are snug against the eye of the shackle and cotter pins are inserted before the shackle is used.
- Make sure widths between the eyes are not greater than they were originally. Excessive widths indicate that the shackle had been strained and should not be used.
- Make sure, when shackles are placed under strain, the bearing surface of the sling or fitting being used covers the entire bearing surface of the shackle pin. If the size of the sling or the size of design of the fitting makes this impossible, then another size shackle should be used.

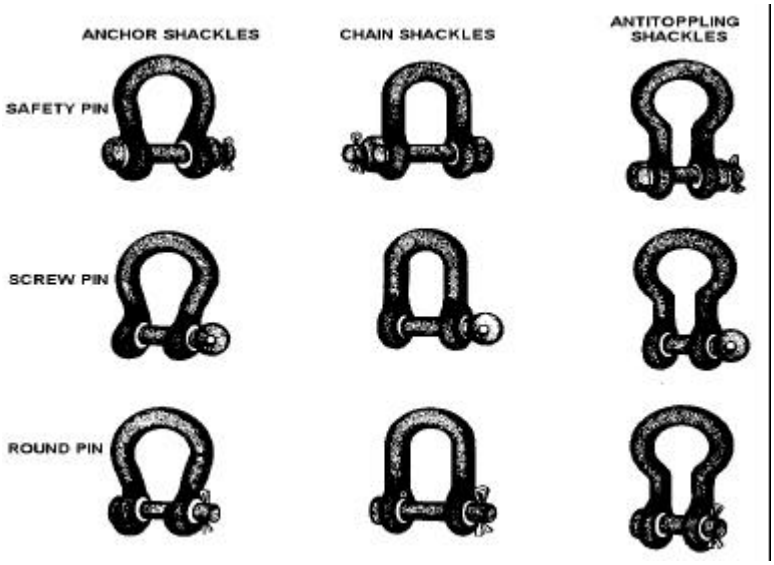

Figure 3-3. Shackles and safety pins

d. **Safety and Inspection.** There are safety and inspection procedures for chains and hooks. These procedures are as follows:

(1) Responsible personnel should inspect chains, including the hooks, at least once a month. Chains that are used for heavy and continuous loading require more frequent inspections. Personnel must pay particular attention to the small radius fillets at the neck of hooks for any deviation from the original inner arc. Each link and hook must be examined for small dents, cracks, sharp nicks or cuts, worn surfaces, and distortions. Those that show any of these weaknesses must be replaced.

(2) When hoisting heavy metal objects using chains for slings, insert padding around the sharp corners of the load to protect the chain links from being cut. The padding may be either planks or heavy fabric. Do not let chains twist or kink when under strain or connect them

Downloaded from http://www.everyspec.com

with bolts or wire; such connections weaken the chain and limit its safe working capacity. Cut worn or damaged links from the chain and replace them with a cold shut link. The cold shut link must be closed and welded to equal the strength of the other links. Small chain links can be cut with a bolt cutter. Large chain links must be cut with a hacksaw or oxyacetylene torch. Inspect chains frequently. Apply a light coat of lubricant to prevent rusting and store chains in a dry and well-ventilated place.

(3) Hooks usually fail by straightening. Any deviation from the original inner arc indicated that the hook has been overloaded. Since evidence of overloading the hook is easily detected, it is customary to use a hook weaker than the chain to which it is attached. With this system, distortion of the hook will occur before the chain is overloaded. Severely distorted, cracked, or badly worn hooks are dangerous and should be discarded.

(4) Sling hooks should always be "moused" as a safety measure to prevent slings or ropes from slipping off. Mousing, the binding of hemp or wire across the opening of a hook to prevent it clearing itself, also helps prevent straightening of the hook but does not strengthen it materially. To mouse a hook (Figure 3-4) after the sling is on the hook, wrap wire or heavy twine eight or ten turns around the two sides of the hook. Complete the process by winding several turns of the wire or twine around the sides of the mousing and tying the ends securely.

Figure 3-4. Mousing hooks

3-3. RIGGINGS AND DECK FITTINGS. There are two types of riggings: standing and running. Information on both riggings and deck fittings is as follows:

a. **Standing Rigging.** Standing rigging includes permanent and semipermanent structures and gear (Figure 3-5).

(1) The principal function of masts is to support cargo booms. Masts also support signal lights, antennas, and crow's nests. On most modern ships, each mast is fitted with a crosstree to which the topping lift blocks are secured, and a mast house, which supports the heel of the boom.

(2) King posts are two vertical supports, usually steel, one each side of the centerline of the ship used to support booms. King posts are also called Samson posts.

(3) Shrouds provide athwartship support for the mast or king posts. Two or more shrouds are used on either side of a mast or king post and are secured to the deck or bulwark in a fore and aft direction to provide maximum support.

Downloaded from http://www.everyspec.com

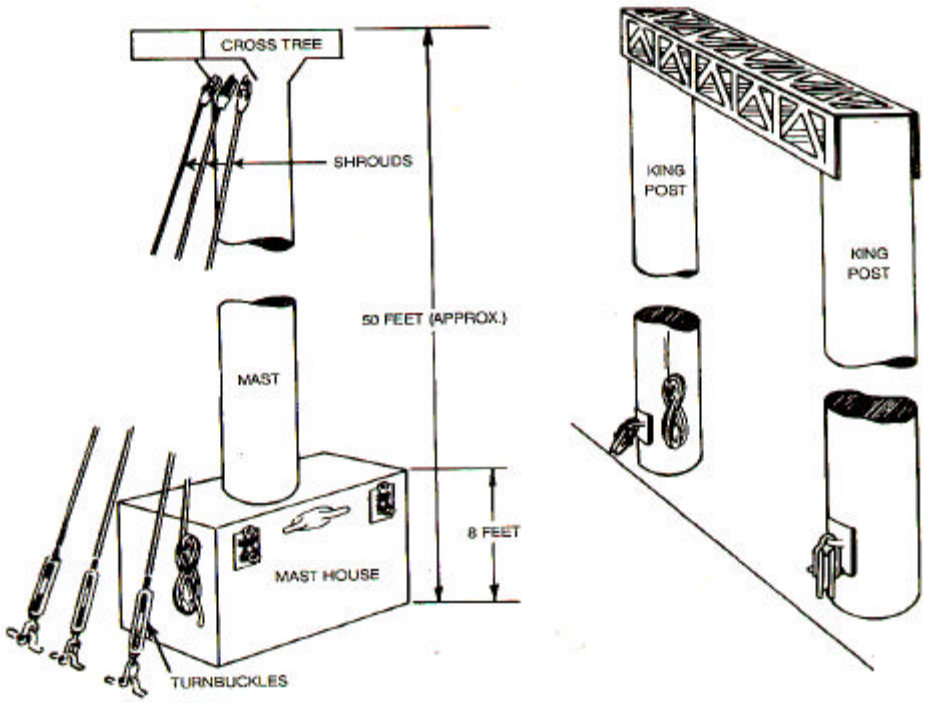

Figure 3-5. Standing rigging

(4) Stays and backstays are heavy wire ropes similar to shrouds, found at the mast where the jumbo boom is located. When they support the mast or king posts from a forward direction, they are called stays; when they support from an aft direction, they are called backstays. Additional stays and backstays may have to be rigged when unusually heavy lifts are being loaded and discharged.

(5) Turnbuckles are internally threaded collars turning on two screws threaded in opposite directions. Turnbuckles are used to take up slack in the shrouds and stays.

b. **Running Rigging.** Running rigging (Figure 3-6, page 3-6) includes the moving parts of the ship's gear.

(1) A cargo boom is a spar extending from a mast or a king post. It is used as a derrick arm to handle cargo. Booms are sometimes referred to as derricks.

(2) The cargo hoisting wire rope or line reeved through the boom blocks and used for working cargo is the cargo runner. The runner is also called the cargo fall or whip.

Downloaded from http://www.everyspec.com

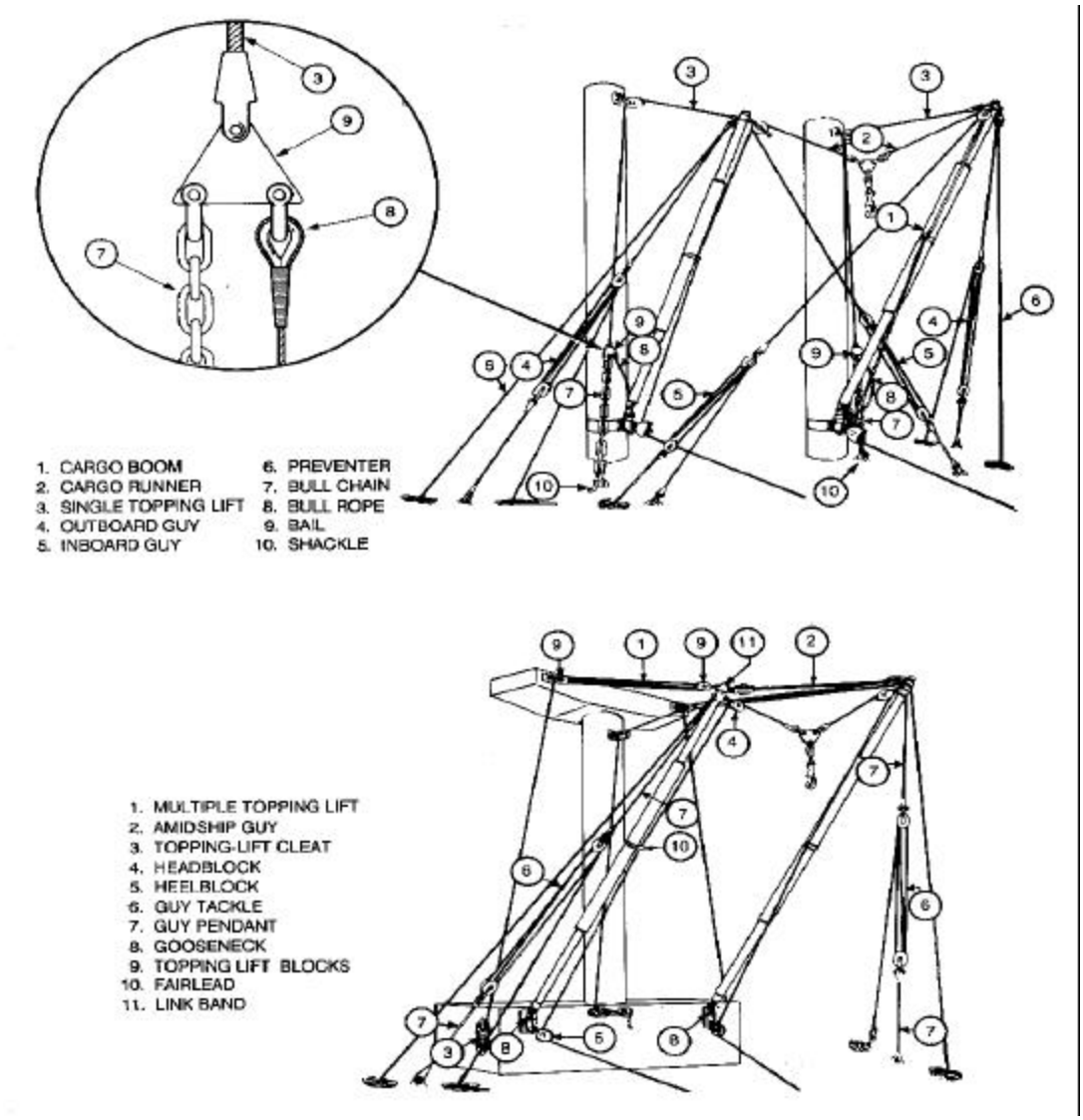

Figure 3-6. Running rigging

(3) The tackle that raises and lowers the boom is the topping lift. Single and multiple topping lifts are used aboard ships.

(a). The single topping lift is a single wire rope 1 1/4 inches or larger running through a single-sheave topping-lift block at the crosstree on the mast or at the top of the king post. One end of the lift is shackled to the head of the boom and the other end to the bail.

(b) The multiple topping lift is a single wire rope reeved through a block at the head of the boom and a block at the masthead and made fast on the topping-lift cleat. The size of the wire depends on the safe working load of the boom, but 5/8- to 7/8-inch wire rope is usually used.

Downloaded from http://www.everyspec.com

(4) The lines or tackle used to steady or swing booms are usually known as guys. When led to a source of power, however, guys are called vangs. Guys may be outboard, inboard, or amidship. An amidships is sometimes called the lay guy or the schooner guy.

(a) Outboard guys are made fast to the outboard side of the head of the booms and to fittings on the deck or bulwark. These guys are often referred to as the working guys because they are under greatest stress. The stress on the guys occurs when the load is being transferred athwartship or when it is being supported anywhere between the two boom heads.

(b) Inboard guys are made fast to the inboard side of the head of the booms and to fittings on the deck or bulwark. Since the load on the cargo hook is always between the heads of the two booms or directly under one of them, there is little or no stress on inboard guys.

(c) Amidship guys serve the same purpose as inboard guys -- they hold the booms together. They have the advantage of being up and out of the way when both booms are being worked together. Amidship guys consist of a light tackle between the heads of the two booms. The hauling part of the tackle is usually led through a lead block on the mast or king post and made fast to a cleat.

(5) The preventer is a wire rope used in addition to the guys to reinforce against additional strain. The preventer is usually made of 5/8- or 3/4-inch wire rope.

(6) The bail plate (topping lift) is a triangular steel plate with a hole in each corner to which are attached to the topping-lift wire, the bull chain, and the bull rope on a single topping lift.

(7) The bull chain is a heavy-duty chain having links 1 1/4 inches in diameter or larger. It is used on a single topping lift to hold the boom in its vertical working position.

(8) The bull rope is a wire rope used on a single topping lift to top and lower the boom.

(9) The topping-lift cleat is attached to the mast house or king post and is used for securing the multiple-topping lift wire.

(10) The head block is the block at the head of the boom through which the cargo runner is led to the cargo hook.

(11) The heel block is the block at the heel of the boom through which the cargo runner is led to the winch.

(12) The guy tackle consists of the blocks and tackle used on guys.

(13) The guy pendant is a short wire rope with a thimble or socket on each end. Guy pendants are used to attach the guy tackle to the head of the boom and to the deck or bulwark.

(14) The gooseneck is a metallic swivel joint that connects the heel of the boom with the mast or the mast house.

Downloaded from http://www.everyspec.com

(15) Topping-lift blocks are blocks at the head of the boom, the crosstree on the mast, or the top of the king posts through which the topping-lift wire is reeved.

(16) A fairlead is a block, ring, or strip of plank with holds, serving as a guide for the running rigging or any rope to keep it from chafing and as a direct line to a source of power.

(17) The link band is a band around the head of the boom to which the topping-lift guys and headblocks are secured.

(18) The stopper chain is a piece of close-link chain about six feet long composed of links 1/4 to 1/2 inch in diameter. It is used to stop off the multitopping-lift wire when transferring the wire from the cleat to the winch and vice versa.

c. **Deck Fittings.** Deck Fittings (Figure 3-7) include the devices used to secure standard and running rigging.

(1) Bitts are used on ship for securing mooring or towing lines.

(2) Chocks are heavy fittings secured to the deck, used for the lead of lines. Types of chocks are closed, open, and roller.

(3) Cleats are metal fittings having two projecting horns welded to a vessel's deck and used for securing lines.

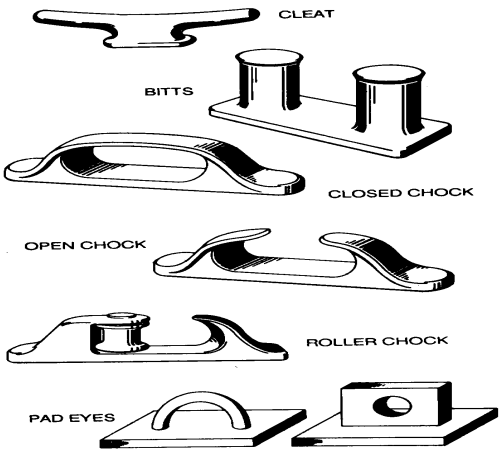

Figure 3-7. Deck fittings

(4) Pad eyes are fixtures attached to a deck or bulkhead, having an integral baseplate and an eye to which lines or tackle may be fastened for securing or hauling cargo.

(5) Cleat and pad eyes are often attached to the bulwark. The bulwark consists of a raised plating along each side of the vessel above the weather deck. The plating is covered by a bulwark rail, which serves as a stiffener for the upper edge of the plating.

3-4. TYPES OF WINCHES. Winch operations use winches during cargo-handling operations to lift, lower, or move cargo. Winches are classified according to their source of power: electric or hydraulic.

a. **Electric Winches.** An electric winch has a steel base on which the winch drum, motor, gears, shafts, and brakes are mounted. The drum is usually smooth with flanged ends and revolves on a horizontal axis. The drum is driven through single or double reduction gears by an electric motor (usually direct current). A solenoid brake and a mechanical brake are fitted to the motor shaft. The winch may be located on deck or on a deckhouse, and the cargo runner is wound on the drum.

Downloaded from http://www.everyspec.com

b. **Hydraulic Winches.** The hydraulic winch has the advantage of smoother operation due to less jerky starts and stops and none of the overheating worries encountered in electric winch operations.

(1) Similar to the electric winch, hydraulic winch control handles are located on pedestals near the square of the hatch. From this position, operators can control the rotation and speed of cargo.

(2) The drive equipment of the hydraulic winch consists of an electric motor driving a variable displacement pump and a hydraulic motor that, through reduction gears, drives the shaft of the winch.

3-5. WINCH OPERATION. The winch operation procedures are as follows:

a. Present cargo-handling methods require two winches for discharging or loading cargo. The winches or winch controls may be located in such a way that one winch operator can operate both, or the location may require two winch operators.

(1) The winch controls consist of a master controller or switchbox located on a pedestal near the end of the hatch square and a group of relays, contactors, switches, and resistors located near the winch motor.

(2) The control equipment regulates speed in both directions. The master controller is normally a five-speed, drum-type, reversing switch commonly found on modern cargo ships. An additional ON-OFF power switch is located on the controller box.

(3) The size of the winch motor depends on the maximum load to be handled on the booms and rigging. Heavier loads normally require changes in rigging and slower speeds. Although boom capacity may range from 5 to 60 tons, a 50-horsepower motor is commonly used on all winches. Since most lifts are 1 to 5 tons, the winches and the rigging are designed to handle these loads at the highest speed practicable. Because the winch motor is a series motor, increasing torque will reduce the speed for heavier loads up to the maximum load for the rigging arrangement.

(4) Most winches are equipped with a solenoid brake on the motor shaft. The brake is set by heavy springs and released by energizing the solenoid coil. When the master controller is moved through the various speed positions to the OFF position, relays are so arranged that dynamic braking occurs for short intervals and then, when the solenoid coil is de-energized, total braking occurs. At least once during every lowering operation, a load going downward at full speed must be retarded and brought to a halt, either when it reaches the deck or when held in the air. Although the speed could be retarded by the friction brake, the frequent wear and tear would require the excessive replacement of brake lining and could necessitate an oversize brake. Dynamic braking on the other hand slows down speed without causing wear on the brake lining and requires the magnetic brake only for final slowing or stopping of the load. For emergency use, a foot-operated brake or other mechanical brake is usually included.

(5) The operation of an electric winch is simple. The speed is determined by the position of the control handle, the amount of runner on the drum, the weight of the load, and the

Downloaded from http://www.everyspec.com

line voltage. In case of an overload, the circuit breaker turns off the electricity, but when the control handle is returned to the OFF position, power is immediately turned on again.

(6) Running an electric winch at slow speed over a long period of time causes the resistors to overheat and eventually burn out. By running the winches at a faster rate, the winch operator can avert such breakdowns.

(7) When preparing electric winches for operation, winch operators will—

- Inspect the winch.
- Open control equipment ventilator covers.
- Turn the switch on the control box to the ON position. Before leaving the winch, the operator must make sure the switch is turned off to prevent accidental starting.
- Move the control handle forward to pay out cable and backward to haul it back in.
- Avoid swinging the draft. Swinging can be prevented in the hold or on the pier by plumbing the draft directly under the head of the boom before hoisting. Swinging in midair can be controlled by waiting until the draft is at the highest point of its outboard swing and then slacking the cargo runner on the hatch winch quickly so that the draft is directly under the head of the boom (Figure 3-8). Tag lines are used on long or oversize drafts for additional control.

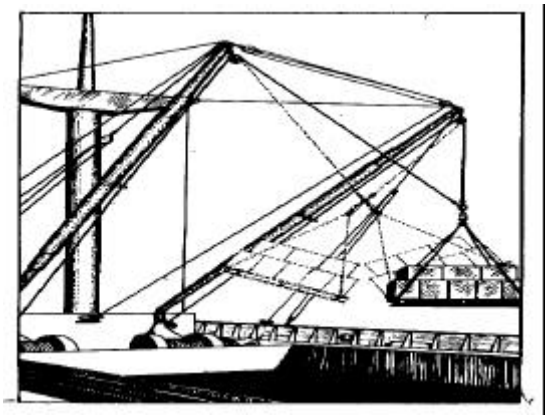

Figure 3-8. Checking the swing of a draft

b. Winch operators must also follow safe operating procedures. These procedures are an important part of winch operation. Operators must—

- Avoid rapid starts and stops or sudden stresses. Sudden starts or stops may break a cargo runner, part guys or topping lifts, or carry away a block.
- Keep the right amount of slack in a cargo runner which is not under stress. Insufficient slack will cause the draft to strike against the side of the ship or the hatch coaming. Too much slack will allow loose turns to pile up on the drum.
- Keep the hook as close to the junction of the falls as possible.
- Keep the loads as close to the rail or deck as possible. Also, keep loads as low to the coaming as possible.
- Avoid severe tightlining of even very light loads, as a difference of only a foot or two in the height of the load may increase the stress tremendously.
- Keep the heads of the two booms as close together and as high as possible to reduce the tension on the falls and the guys. This procedure is effective at any given height in the junction of married falls.
- Turn off an electric winch if it becomes necessary to walk away from the controls.

Downloaded from http://www.everyspec.com

- Ensure slings are as short as the draft permits. Slings that are too long permit excessive swinging of a draft resulting in a fiddlestring or tightline pull. This in turn causes excessive strain on the cargo falls and guys as the two winches pull against each other; it also causes a torque or twisting effect on the boom. If the fiddlestring pull is unavoidable because of the type of cargo being handled, a single swinging boom rigging should be considered.

3-6. SIGNALS USED IN WINCH OPERATIONS. The winch operator cannot see the draft at all times; therefore, he must depend on the signalman for instruction. The safety and smoothness of the operation depend on the judgment of the signalman and the skill of the winch operator to respond; a team effort is essential.

a. Every member of the hatch section must be familiar with the signals used in cargo handling. Each signalman must know the safe methods of slinging cargo and must satisfy himself that the draft is slung properly before giving the winch operator a signal to move it. The signalman must learn to judge the few seconds that elapse between the time the signal is given and the actual stopping of the winch. If allowance is not made for this, accidents may results.

c. The signalman and the winch operator must clearly understand the signals in order to prevent accidents, confusion, and damage to the cargo or the cargo gear. The signalman must place himself in such a position that he can see the draft at all times and ensure that his signals can be clearly seen by the winch operator. Both the signalman and winch operator should continually observe the rigging, paying particular attention to slack guys, chaffing runners, loose pins in shackles, strained hooks, and any condition of slings and bridle which could be unsafe.

d. To signal for two winches, both hands are used. There must be a clear understanding between the winch operator and the signalman concerning which hand controls each winch. Figure 3-9, page 3-12 shows the standard hand signals for winch operations.

Section II. Rigging Procedures

3-7. RIGGING STANDARD CARGO BOOMS. Before a ship may be worked, the booms must be topped (raised), guyed, and properly spotted. Each man in the hatch section should understand the procedures for topping, spotting, and lowering the booms.

a. Most of the newer cargo ships are equipped with separate topping-lift winches. Booms can be topped or lowered simply by operating the topping-lift winch. When topping and lowering booms, the hatch foreman must—

- Ensure that the deck is well policed before rigging begins.
- Assign the necessary number of men to specific jobs and have all men stand clear of the deck under the booms.
- Require personnel to wear gloves.
- Inspect rigging and deck fittings.
- Supervise the placement of guy tackles.

Downloaded from http://www.everyspec.com

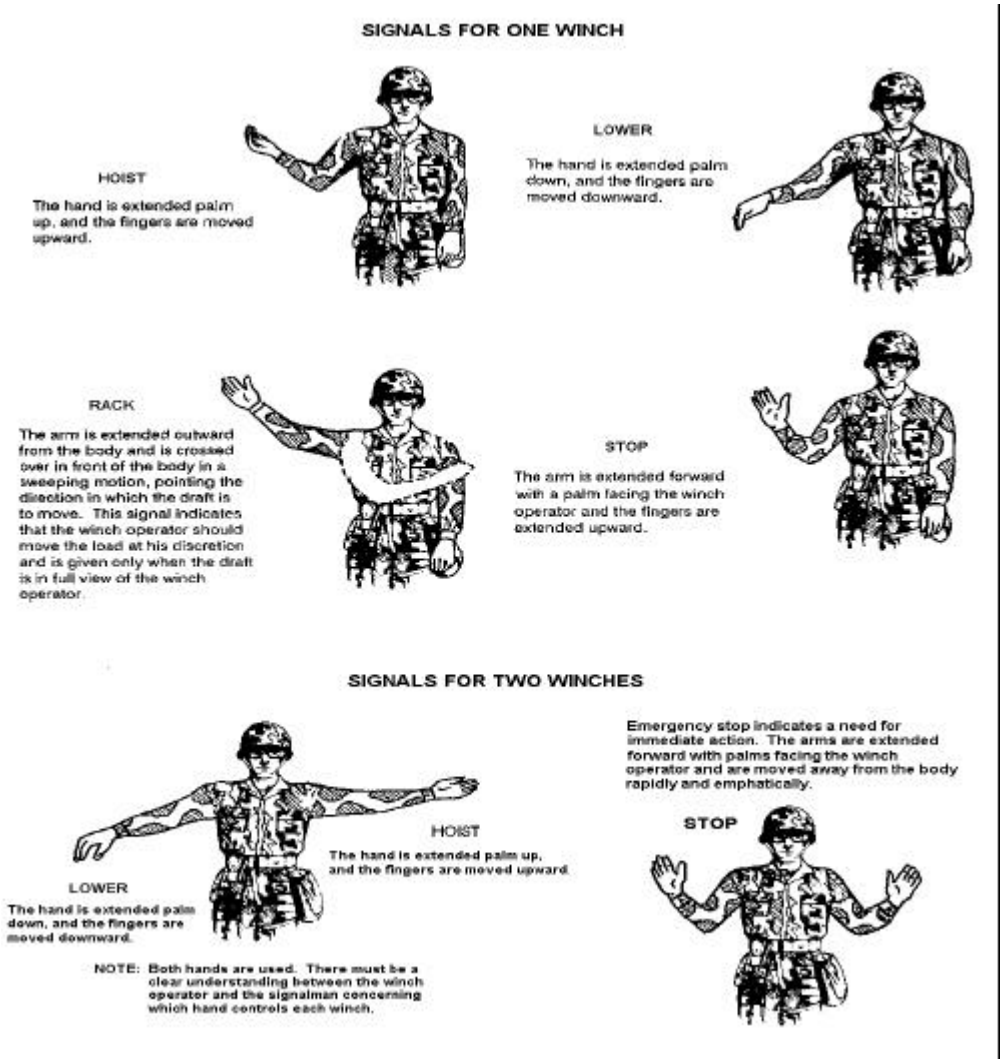

Figure 3-9. Signals used in winch operation

- Require nonessential personnel to stand clear when booms are being topped or lowered.
- Ensure that no personnel are standing where they could become entangled in lines about the deck.

b. When using cargo booms, operators will—

- Inspect booms before starting work. Before applying power to a guy, be sure that the gooseneck is free to turn by heaving on the guy by hand.
- Not run cargo runners across the hatch coaming.
- Not handle drafts that exceed the safe working load of the rigging.
- Instruct military cargo handlers to take sufficient turns on a cleat or cathead while the boom is high to ensure having control of it when it reaches a low position.

Downloaded from http://www.everyspec.com

- Avoid overloading or putting shock loads on the cargo gear when the boom is at a low angle.
- Avoid letting a loaded boom rest against a stay, shroud, or other fixed object as the resultant bending may cause the bottom to fail.
- Keep tension on married falls as low as possible during a lift.

3-8. TOPPING BOOMS. The procedures for topping booms are as follows:

a. **Multiple-Topping Lift (Booms in Cradles).** The procedure for topping booms with multiple-topping lifts when the booms are in cradles is as follows:

(1) When topping booms with multiple-topping lifts, the hatch foreman will assign men to winches, guys, runners, topping-lift wire, and cathead. He will also assign one person to overhaul the runner as the boom is topped and assign persons to the outboard and inboard guy.

(2) The hatch gang will lay out guys to proper fittings and lay topping-lift wire along the deck or over the rail. The hatch gang will then place the hauling part of topping-lift wire in a wire rope snatch block and take five turns with topping-lift wire around the cathead in the direction opposite the cargo runner (underneath the cathead). Persons are assigned to clear the topping-lift wire and attend the cathead.

(3) The winch operator will raise the boom to the desired height by putting the control lever of the winch in position for lowering and take in the hauling end of the topping-lift wire which is wound around the cathead.

(4) To secure the topping-lift, the hatch gang will apply the stopper chain using the following procedure:

(a) With the stopper chain secured to a pad eye on deck, pass the running end of the chain around the topping-lift wire, making sure that at the completion of the turn, the running end of the chain passes under the standing end of the chain (Figure 3-10, 1, page 3-14).

(b) Run the running end of the stopper chain around the topping-lift wire again, making sure that this turn passes over the first turn (Figure 3-10, 2, page 3-14). The chain's running end should again go under the standing end at completion of the turn. This completes a double half hitch, rolling hitch, or stopper hitch (Figure 3-10, 3, page 3-14). Holding the stopper hitch tightly in place, take two half hitches above the stopper hitch.

(c) Wind the remainder of the chain around the topping-lift wire so as to bind the half hitches. Have one man hold the chain in this position (Figure 3-10,4, page 3-14).

Downloaded from http://www.everyspec.com

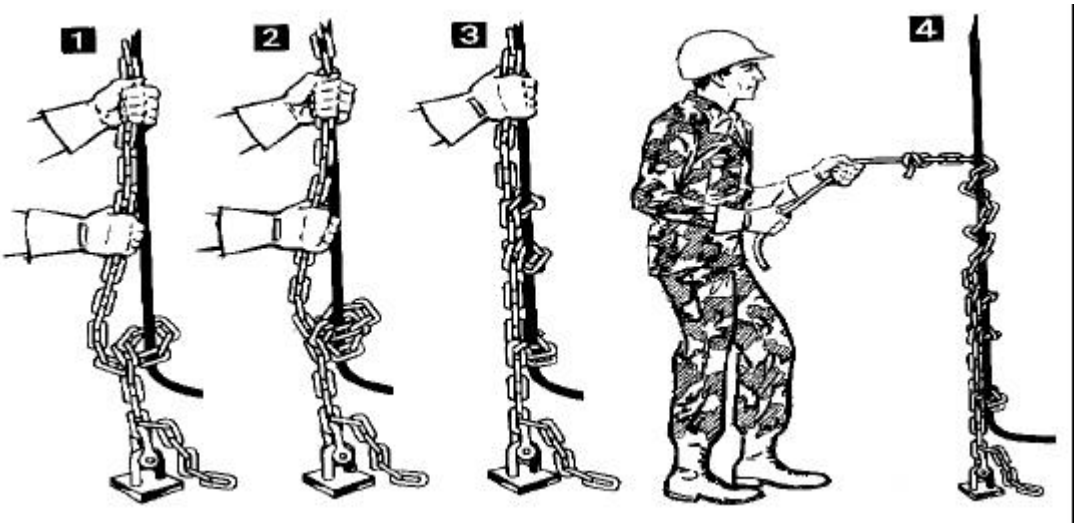

Figure 3-10. Steps in applying stopper chain

(d) With the turns still on the cathead, slack off the topping-lift wire slowly until the weight of the topping-lift is transferred from the cathead to the stopper chain.

(e) When the chain has the weight of the topping-lift, remove the turns from the cathead and secure the topping-lift wire to the topping-lift cleat by taking three round turns on the cleats followed by three figure eights.

(f) Tie or mouse the figure eights with a piece of rope yarn or wire. The remainder of the topping-lift wire can be coiled loosely around the cleat to keep it off the deck and out of the way.

(g) Remove the stopper chain.

(5) The winch operator will swing the booms to working position by hauling on the guys and spotting them according to the type of rigging desired.

(6) The hatch gang equalizes guys and preventers.

b. **Single Topping Lift (Booms in Cradles).** The procedure for topping booms with a single-topping lift when the booms are in cradles is identical to that for multiple-topping lifts with two exceptions:

(1) On vessels rigged with single-topping lifts, the catheads are equipped with a fitting to which the bull rope can be made fast. When this fitting is available, the bull rope is secured to it instead of five turns being taken around the cathead.

Downloaded from http://www.everyspec.com

(2) The stopper chain is not used; instead, the topping lift is secured as follows:

(a) After the boom has been raised to the desired height, shackle the bull chain to the deck as shown in Figure 3-11.

(b) Slack off the bull line slowly until the chain supports the weight of the boom.

(c) Remove the bull line from the cathead and coil it around the cleat. It is only necessary to get the bull line off the deck and out of the way since it does not support the topping lift unless the boom is being topped or lowered.

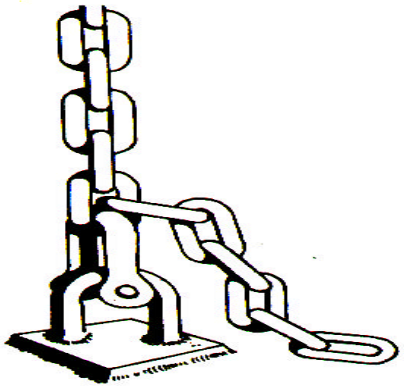

Figure 3-11. Bull chain secured

c. **Topping-Lift Winches.** Most of the newer cargo ships are equipped with separate topping-lift winches. Booms can be topped or lowered simply by operating the topping-lift winch.

3-9. LOWERING BOOMS. Multiple-topping lifts, single-topping lifts, and guying booms are all used in lowering booms. The procedures for each are listed below.

a. **Multiple-Topping Lifts.** The procedures for lowering booms with a multiple-topping lift are as follows:

(1) When lowering booms with a multiple-topping lift, the hatch foreman will assign persons to winches, guys, runners, topping lift, wire, cathead, and stopper chain.

(2) A member of the hatch gang will apply the stopper chain and transfer the wire from the cleat to the cathead, taking five turns in the same direction as the cargo runner (over the cathead).

(3) The hatch gang will remove all the topping-lift wire from the topping-lift cleat, except the three round turns, and carefully surge the topping-lift wire until the stopper chain supports the weight of the boom.

(4) The winch operator takes up on the winch until the strain is transferred from the stopper chain to the cathead. The hatch gang member removes the stopper chain, and the winch operator lowers the boom using the winch.

(a) While the booms are being lowered, men assigned to tend guys take in on the guy tackles and those assigned to tend the runner overhaul it to prevent turns from piling upon the winch.

Downloaded from http://www.everyspec.com

(b) The ship's master may direct that booms be lowered into cradles and secured upon completion of the operation, or that they be secured in any other manner he mandates.

(5) When booms are down, responsible personnel will secure all gear as follows:

- Rewind runners smoothly on the drum of the winch and secure the cargo hook to a ring or a pad eye with a slight strain.
- Secure guys to the heel block or fittings on the mast table and pull them taut.
- Coil the hauling parts of outboard and inboard guys over the guy tackles and tie off the guys. Make amidship guys fast to the cleat on the mast.
- Secure topping-lift wires to the topping-lift cleat.

b. **Single-Topping Lift.** The procedure for lowering booms with a single-topping lift is identical to that for multiple-topping lifts except for the procedures listed below.

(1) Cargo handlers will transfer the weight of the boom to the cathead as follows:

(a) Remove the bull line from the cleat and secure it to the fitting on the cathead, if available, making sure that the bull line is led through a snatch block to the cathead and not directly to the cathead. If there is no such fitting, take five turns around the cathead in the same direction as the cargo runner (over the cathead).

(b) Raise the boom slightly to remove the weight from the bull chain and remove the shackle that secured the bull chain to the deck.

(c) Lower the boom by depressing the control handle of the winch.

(2) After the booms are down, secure the gear. The bull chains are then shackled to pad eyes, and bull ropes are hung over the topping-lift cleat.

c. **Guying Booms.** The procedures for guying booms are as follows:

(1) ***Methods of guying***. There are two methods of guying the fixed booms of the yard-and-stay type of rigging. Operators may use outboard and inboard guys or outboard and amidship guys. The outboard and amidship guys are used more frequently. If the inboard guy is used, members of the crew must find a place on the deck or bulwark to secure it. Since the load on the cargo hook is always between the heads of the booms or directly under one of them, there is always less stress on the inboard or amidship guys than on the outboard guys. The lightweight amidship guy is sufficient to carry the stress and is raised aloft out of the way.

(2) ***Equalizing guys and preventers***. Besides the regular outboard guy on the fixed boom, an additional wire is attached to the head of the boom and led to the deck to act as a preventer. Crews must avoid rigging the preventer so that the guy takes all the stress and the preventer takes stress only if the guy parts.

(a) The preventer is usually a single heavy wire while the guy has a manila or synthetic fiber purchase; therefore, the preventer and the guy will not share all loads

Downloaded from http://www.everyspec.com

equally. If the guy and preventer have equal tension under a light load, the guy stretches much more than the preventer under heavy loads so that the preventer has to take most of the increase. Crews can avoid this situation by adjusting the guy under a light load so that there will be a little more tension on it than on the preventer. Under a heavy load, then, the guy will stretch and let the preventer have its share.

(b) Crews should also secure the guy and preventer as close together as possible without fastening them to the same fitting. This is done because if the guy is in one place and the preventer in another, the desired equalization of tension between the two will not be achieved; under different degrees of tension the stress on one will increase more rapidly than on the other. Once the guys and preventers have been secured as close together as possible, the crew will equalize the guys and preventers using the following steps:

- ***Step 1.*** Swing booms slightly beyond the spotting position (approximately 2 to 4 feet).
- ***Step 2.*** Secure the preventer to a pad eye on deck.
- ***Step 3.*** Secure the outboard guy to a cleat on deck by making one figure eight with one hatch member remaining to hold the guy tightly.
- ***Step 4.*** Take all slack out of the amidship or inboard guys. The booms will swing inboard to the desired position. This action should nearly equalize the strain between the outboard guys and preventers, depending on how close together the guys and preventers are secured.
- ***Step 5.*** Place a strain on the outboard guys and preventers by lifting a light draft centered between the two booms.
- ***Step 6.*** Equalize the outboard guys and preventers by surging, or slacking off slowly, on the outboard guy until desired tension is obtained. Then secure the outboard guy.
- ***Step 7.*** Take out all slack in the amidship or inboard guys and secure them.

(c) If the guys and preventers are constructed of the same materials, they react to heavy and light loads equally. Therefore, when the guys and preventers are of identical material, the crew must slack off slightly on the outboard guys to equalize the strain, even with a light load. Slack off the outboard guys after the booms have swung inboard and nearly equalized the strain between the outboard guys and preventers. When the guy and preventer cannot be nearly parallel, the guy should be placed in the position of greater stress (more nearly in line with the fall) under most conditions.

(d) The crew must avoid slack in both the preventer and the guy. Otherwise, if one fails, the other fetches up with a jerk after the slack is taken out. Also, if unnecessary slack is allowed to develop in guys, booms map slap about.

(e) While there have been a few instances in which either the guy or preventer parted and the other held, the proper use of preventers has saved many a weak guy. Preventers should be considered useful only in keeping the guy from parting, not in holding the boom after the guy parts. A few vessels have heavy preventers (which are intended to carry the guy load) and very light guys (which are intended only for trimming the booms). Since these guys provide little additional strength, they should not be left slack. The crew should check manila guy purchases regularly since it shrinks when wet and stretches when dry; synthetic fiber lines are not affected by moisture.

Downloaded from http://www.everyspec.com

(3) ***Positioning guys.*** The importance of properly guying booms with respect to the angles of stress cannot be overemphasized, particularly when using married falls. Overstressed guys could result in loss of time, cargo, cargo gear, and lift. Figure 3-12 illustrates three positions of the guy and boom, and Table 3-1 shows how strains vary with these positions. In Figure 3-12, "A" denotes that the guy is in line with the fall, "B" that the guy is at a right angle to the boom, and "C" that the guy is behind the heel as far as it is possible to place it without topping.

(a) The greatest drift and the lowest possible strain result when the amidship boom is angled far inboard and the guy is placed at a right angle to the boom (Figure 3-12, boom position 3, guy B).

(b) With the amidship boom head over the coaming (Figure 3-12, boom position 2) or outboard of it (Figure 3-12, boom position 1), the guy should be led as far back of the heel as possible without topping (Figure 3-12, boom position 2, guy C, and Figure 3-12, boom position 1, guy C).

(c) The greatest strain results when the amidship boom angles outboard and the guy is in line with the fall (Figure 3-12, boom position 1, guy A).

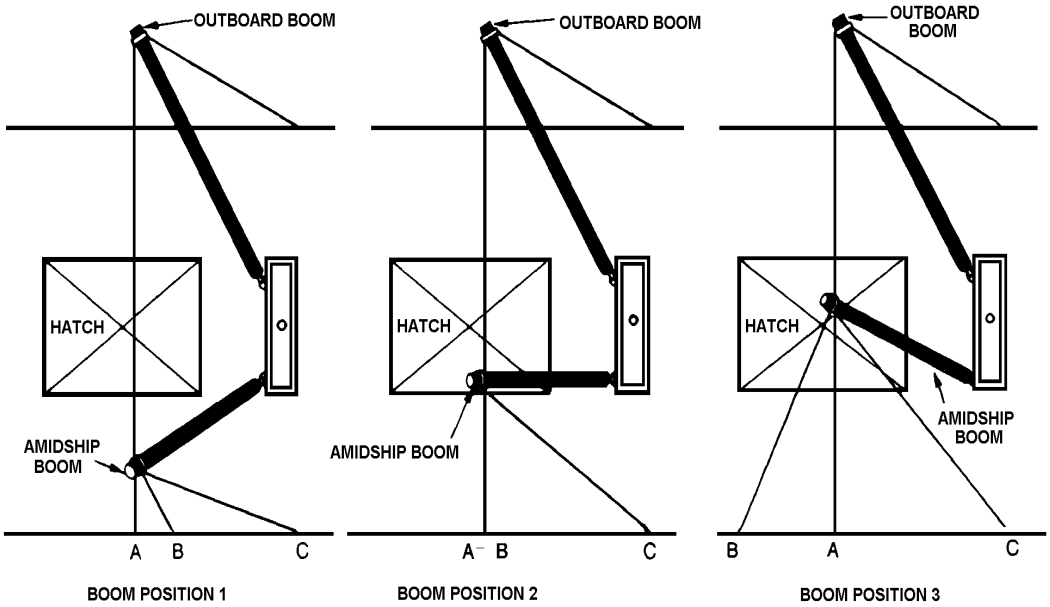

Figure 3-12. Guy and boom positions

Table 3-1. Strains on cargo gear at various guy positions (Load, 1 short ton; falls, 30 degrees from horizontal)

Downloaded from http://www.everyspec.com

Boom Position	Guy Position	Guy strain (tons)	Amidship-boom strain (tons)	Topping-lift strain (tons)
1	A	4.3	7.0	2.4
1	B	3.2	5.4	1.3
1	C	2.4	4.0	0.3
2	A	2.6	4.7	1.4
2	B	2.6	4.7	1.4
2	C	2.6	4.1	0.2
3	A	2.3	4.2	1.4
3	B	1.3	3.2	1.5
3	C	3.1	4.4	0.2

(d) Figures 3-13 through 3-16, page 3-20 show the after end of number 4 hatch on a C3 cargo vessel. The gear has been trimmed to work the near end of the hatch with the up-and-down boom in a fore-and-aft line through its heel and the guy in line with the fall. The figures and paragraphs following deal mainly with the swinging boom and outboard guys and only briefly with the inboard gear, since experience shows that it is with the first two outboard guys that failure in capacity usually occur.

(e) Figures 3-13 through 3-16 also show a 1-ton load suspended at various load positions using two booms and married falls. The weight of the load is given next to the amidship boom in each figure. This weight, when lifted on a single swinging boom, would produce approximately the same strain (compression) as the 1-ton load shown in that figure.

(f) Even with a fall angle of only 90 degrees, occurring where the junction of the falls is about 20 feet above the deck (Figure 3-13, page 3-20), the tension on the outboard guy of the stay boom is 1.6 tons, and the swinging boom supports the equivalent of 2.1 tons. The stresses go up (Figures 3-14 and 3-15, page 3-20) as the 1-ton load is raised until the angle between the falls reaches 150 degrees (Figure 3-16, page 3-20), when the tension on the outboard guy of the stay boom is 6.2 tons and the equivalent load on the swinging booms is 6.4 tons. The principle explains why a boom which has been tested with a swinging load of 7 tons will sometimes fail under a load of only 3 or 4 tons which is being supported by two booms. Unless otherwise stated, "5-ton SWL" stenciled on the heel of a boom refers to a load on a swing boom, not one being lifted by using married falls.

Downloaded from http://www.everyspec.com

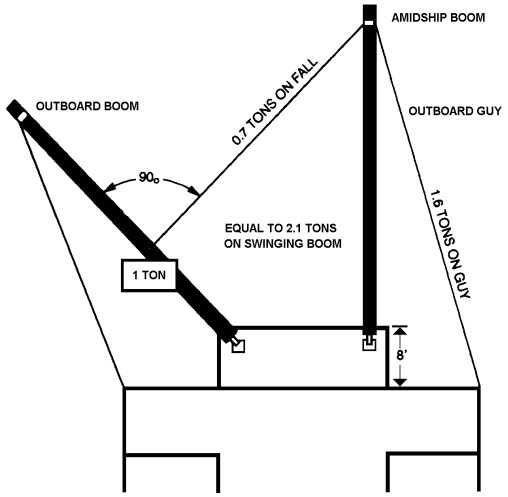

Figure 3-13. Load suspended at 90-degree fall angle

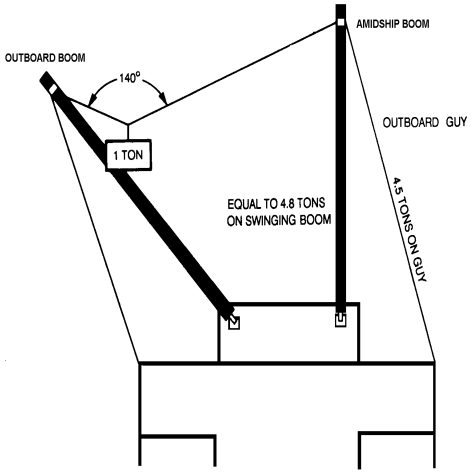

Figure 3-14. Load suspended at 140-degree fall angle

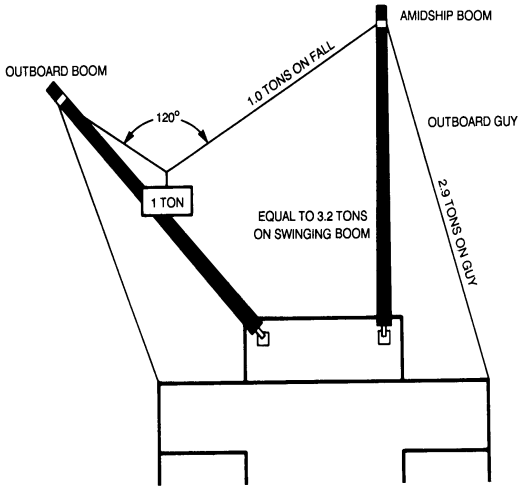

Figure 3-15. Load suspended at 120-degree fall angle

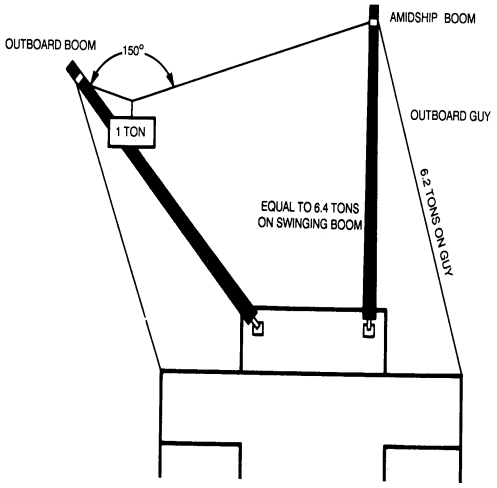

Figure 3-16. Load suspended at 150-degree fall angle

(g) The strain on the falls in Figures 3-13 through 3-16 varies with the angle between them produced by each load position. Figure 3-17 shows this principle in more detail. As the angle between the falls increases, the strain on each fall increases according to the percentages shown. Once the angle between them increases beyond 120 degrees, just a small change in the angle causes a massive increase in the strain exerted on each fall. For example, Figure 3-17, D, shows only a 20-degree increase in angle (from 120 degrees to 140 degrees) which

Downloaded from http://www.everyspec.com

causes a 41 percent increase in the strain exerted on each fall. In Figure 3-17, F, a 10-degree increase in angle (from 150 degrees to 160 degrees) causes a 94 percent increase in the strain exerted on each fall. Finally, in Figure 3-17, H, a 5-degree increase in angle (from 170 degrees to 175 degrees) causes a 576 percent increase in the amount of strain exerted on each fall. A load held with a 175 degree angle between falls exerts a strain equivalent to 1,146 percent or 11 1/2 times the weight of the original load on each fall. The terminal operations specialist can use the figures given here by multiplying the weight of a particular load by the percentage shown, and multiplying that figure with the approximate angle at which the load is suspended.

(h) The additional pull exerted on the falls as the angle increases is mainly a horizontal pull that tends to move the two supporting booms toward each other. Table 3-2 lists the tension on each fall at various fall angles, both as a percentage of the weight of the load (column b) and in pounds (column c), and shows how much of that tension is a horizontal pull tending to bring the boom heads together (column d). With a heavy load, the final angle of the falls will be smaller than in the case of a light load, since the winch can more easily "tightline" a light load (Figure 3-17, H) than a heavy load. Tightlining occurs when the angle between the falls approaches 180 degrees. A lighter load suspended at a higher height will produce a greater horizontal pull than the heavier load which stalls a winch at a lower height.

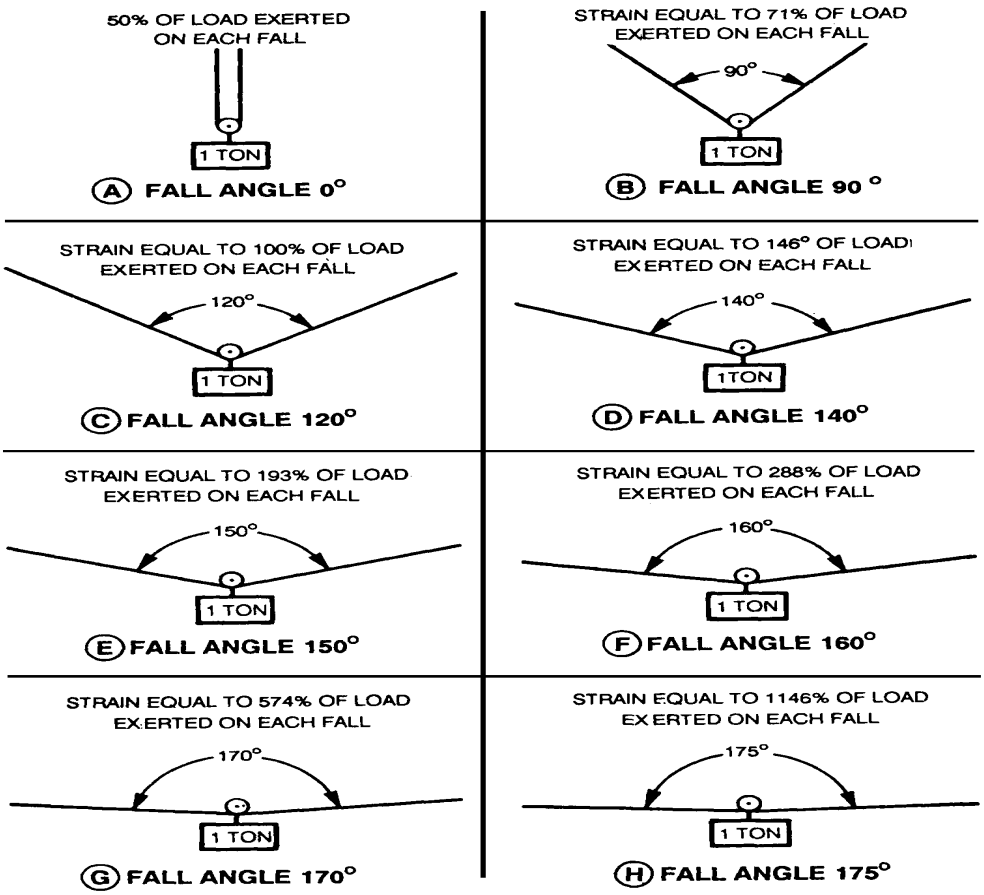

Figure 3-17. Varying strains with angle of falls

Downloaded from http://www.everyspec.com

(i) Table 3-2 and Figures 3-12 through 3-17 illustrate that severe tightlining of even very light loads between two booms is dangerous because a difference of only a foot or two in the height of the load (increase in the fall angle) may increase strain tremendously. Use the following techniques to minimize the degree of angle between married falls:

- Use slings which are no longer than necessary.
- Keep the hook as close to the junction of the falls as possible. If chain is used for additional weight, hang it in a bight beside the hook rather than between the hook and the junction of the falls.
- Keep loads as low as possible, but maintain sufficient height for them to clear the ship's rail.

Table 3-2. Effect of fall angles on fall tensions

(a) Fall angle (degrees) (b) Percentage of strain on each fall to weight of load (percent) (c) Tension on each fall with load of 1 short ton (pounds) (d) Horizontal pull tending to bring boom heads together (pounds)			
(a)	(b)	(c)	(d)
0	50	1,000	0
60	57	1,155	577
90	71	1,414	1,000
120	100	2,000	1,732
140	146	2,924	2,748
150	193	3,864	3,732
160	288	5,759	5,671
170	574	11,474	11,430
175	1,146	22,926	22,904

(4) ***Topping or jackknifing of booms***. Topping occurs when strain is placed on a boom resulting from incorrectly positioned guys. A topping or jackknifing boom can cause considerable damage to the ship's gear and result in loss of life. Responsible personnel should determine whether or not the guys are properly placed to prevent topping of a boom. Figure 3-18 shows the visual test personnel should use to help determine if booms will top.

(a) To determine if the outboard boom can top, sight from the pad eye (Figure 3-18, A) where the lower end of the outboard boom's outboard guy is secured, to the head of the amidship boom (Figure 3-18, B); if the line of sight passes behind the heel of the outboard boom (Figure 3-18, C) the boom can top. If the line of sight is ahead of the heel and below the outboard boom, it will not top. If the line of sight is ahead of the heel but above the boom, it will top only until it reaches the line of sight.

Downloaded from http://www.everyspec.com

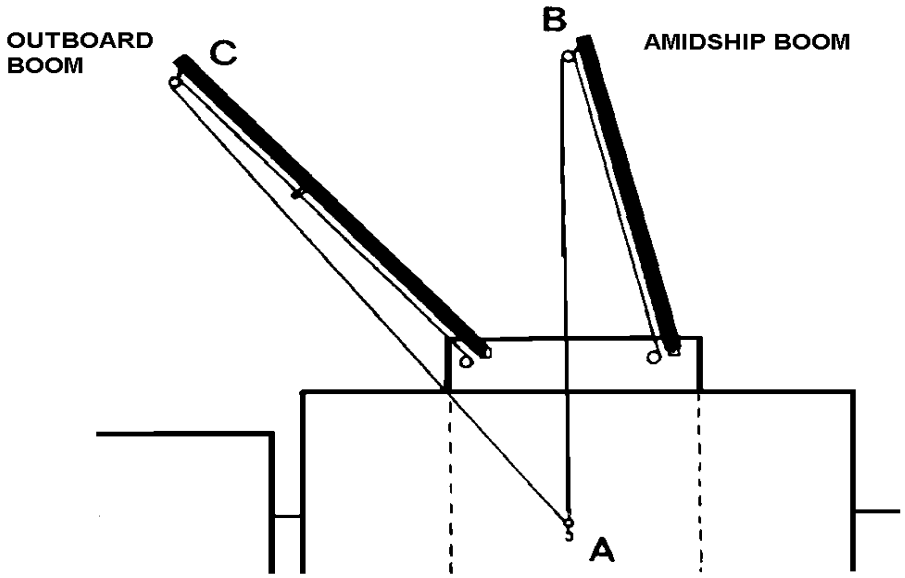

Figure 3-18. Determining if outboard boom can top completely

(b) To determine if the amidship boom can top, stand at a point near the ship's rail where the distance from the heel of the amidship boom to the head of the outboard boom can be sighted. If the outboard guy of the amidship boom passes above the line of sight, the boom will top (Figure 3-19). If the outboard guy of the amidship boom passes below the line of sight, the boom will not top.

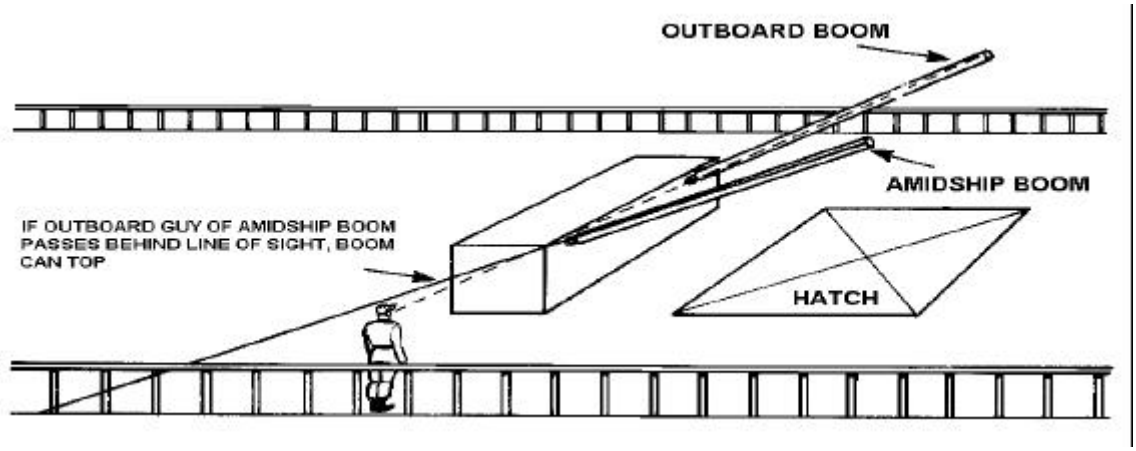

Figure 3-19. Determining if amidship (stay) boom can top

Downloaded from http://www.everyspec.com

NOTE: There is one exception to the rules in paragraph (b) above. When the heels of the booms are far outboard from the centerline, placing the guy in the manner just described to prevent the outboard boom from topping all the way will result in the guy being nearly parallel to the boom. This puts the guy under extreme tension and may result in the failure of either the guy or the boom. In this case the guy should be left well back of the heel of the boom where the stresses are minimal, and the preventer should be placed well ahead of the heel, with a foot or so of slack. This slack is an exception to the general rule for preventers. When the boom tops up, which is likely, the preventer will limit the amount of rise.

3-10. RIGGING SYSTEMS. There are five rigging systems. Each system is listed below.

a. **Yard-and-Stay Rig** The yard-and-stay system (Figure 3-20) is used for loading and discharging cargo, particularly when a new winch operator or heavy drafts are involved. This rig is sometimes referred to as the union, married falls, or burton system.

(1) Using the yard-and-stay method of rigging, the operator spots one boom over the center of the hatch (referred to as the amidship boom, the stay boom, or the hatch boom) and the other boom over the side of the vessel (referred to as the outboard boom, the yard boom, or the burton boom). The ends of the cargo runners are shackled or married to a single cargo hook.

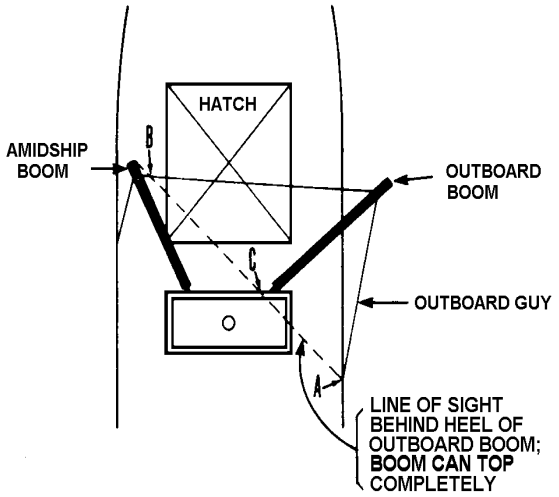

Figure 3-20. Spotting booms with Yard-and-stay rig

(2) In discharge operations, responsible personnel attach the cargo to the cargo hook in the center of the hatch. The draft is lifted directly up by the cargo fall of the boom spotted over the hatch. At the same time, the slack in the other fall is taken up. As the draft reaches the desired height above the coaming, the lifting cargo fall is stopped and then slacked off while the fall on the outboard winch continues the lifting operation. This action carries the draft of cargo over the side of the vessel. The outboard winch then lowers the draft to the pier. In loading cargo, the operation is reversed.

b. **Farrel Rig.** A major improvement in the yard-and-stay method of rigging the ship's gear for burtoning cargo had been made in recent years. This method involves using the farrel rig (Figure 3-21). The procedure consists of placing the heels of the outboard guys (vangs) on a common axis or making them coaxial. Topping-lift winches are installed and the hauling part of the topping list is reeved through lead blocks secured near the ship's centerline.

Downloaded from http://www.everyspec.com

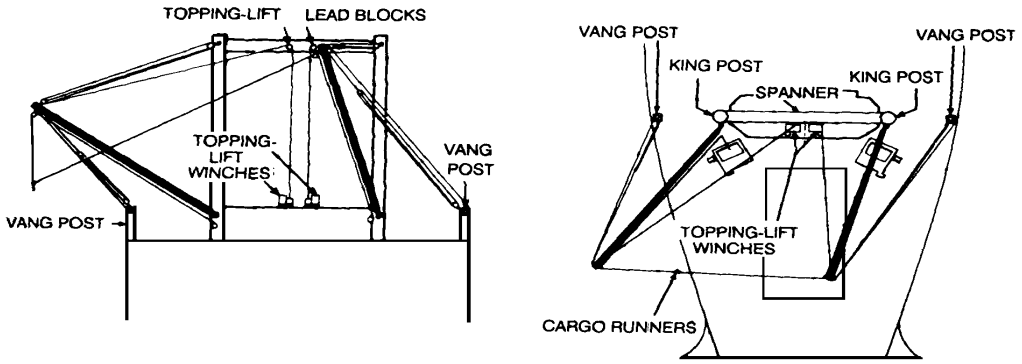

Figure 3-21. Farrel rig

(1) Once the guys have been secured to the short vang posts and pulled tight, there is no need to tend guys. The boom head moves vertically along a straight line parallel to the centerline of the ship. With this setup, all that must be done to top or lower the boom is to press the button controlling the topping-lift winch.

(2) The addition of topping-lift winches makes this rig more useful. With the guys led to power, it is possible to swing the boom in either direction under power, thus providing complete power positioning of the unloaded boom.

c. **Ebel Rig.** The ebel rig (Figure 3-22) was designed to handle loads up to the full capacity of 5- and 10-ton booms by the burton system, provide for complete power positioning of the unloaded booms, eliminate manual handling of lines, and increase safety. Figure 3-23 shows the arrangement of the topping lift on the 5- and 10-ton booms. The topping lift is offset inboard near the centerline of the ship to control the swinging of the boom in the outboard direction. The hauling part of the topping lift is led down the inboard side of the king post through a lead block to the drum of one of the topping-lift winches mounted on the king post.

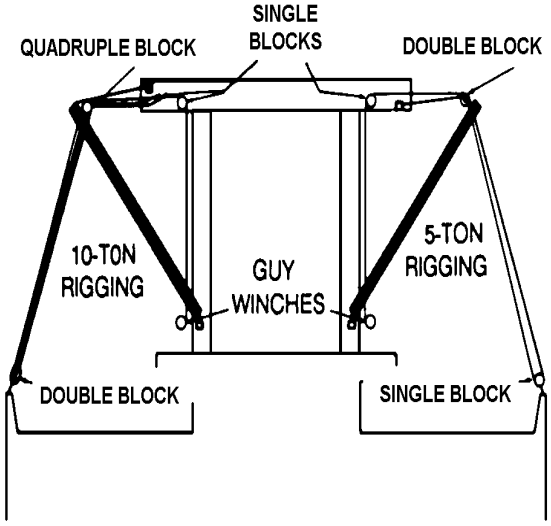

Figure 3-22. Ebel rig

Downloaded from http://www.everyspec.com

(1) Figure 3-23 shows the arrangement of the mechanical guys on the 5- and 10-ton booms. When rigging the 5-ton boom, the standing part of the guy is secured to the extreme outboard end of the crosstree and runs over a sheave at the head of the boom, down to a sheave at the bulwark, back around the second sheave at the head of the boom, through a lead block, and then down the outboard side of the king post to the drum of the electric guy winch mounted on the king post. No vang posts are necessary because the guy is secured to the deck or bulwark.

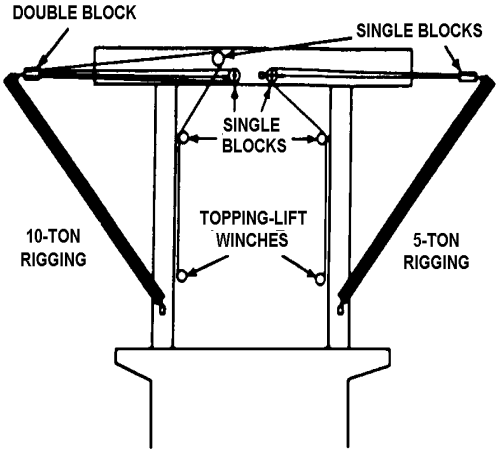

Figure 3-23. Ebel rig with 5- or 10-ton boom rigging

(2) The ebel rig is designed so that the effective guy resultant force keeps the stresses moderate, even when 5- and 10-ton loads are being handled. If the draft is hoisted to excessive heights, the outboard boom head rises by riding up the bight of the guy tackle until it reaches a position of equilibrium with the load. While the boom head rises, the draft remains almost stationary. The angle between the two falls is thus limited to a fixed predetermined maximum, and no part is overloaded. When the draft is lowered by slacking off on the falls, the boom resumes its normal position by riding down the bight of the guy. Since the boom is never free from the tensioned guy, it cannot drop freely. When moving (burtoning) 5 tons, the minimum height of the married fall above the deck at which the outboard boom will ride up is about 30 feet. For lighter loads, it is higher. The drift is ample to handle almost any draft.

d. **West Coast Rig.** The west coast method of rigging (Figure 3-24) is a modified form of the yard-and-stay method and is the most common rig used by the military. This operation differs from the yard-and-stay method only in the way the amidship boom is spotted and the winches are operated. The amidship boom is spotted approximately halfway between the hatch coaming and the ship's side. The particular advantages of the west coast rig are the speed and ease with which the draft can be landed on either side of the hold or between deck close to the point of stowage. Operators must be skillful in winch operation because the draft is raised from the hold or lowered into the hold, supported equally by both runners. Normally, this type of operation requires only one winch operation, but two operators may be needed depending on the location of the

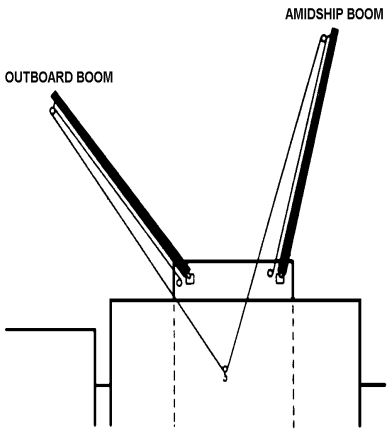

Downloaded from http://www.everyspec.com

winch controls.

Figure 3-24. Spotting booms with a west coast rig

e. **Wing-and-Wing Rig.** Another modification of the yard-and-stay method of rigging is the wing-and-wing method (Figure 3-25) which differs in the way the booms are spotted and the winches are operated. Both booms are spotted over the side of the ship, one boom on each side. Operators then equalize the booms in the same manner as the outboard boom in the yard-and-stay rig. The load is lifted from the hatch supported equally by both runners. Operators must use winches skillfully to avoid tightlining.

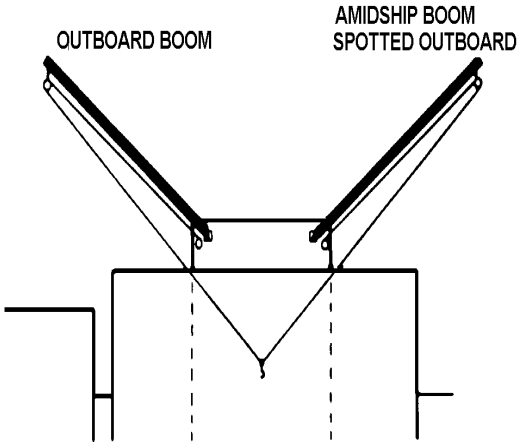

Figure 3-25. Spotting booms with a wing-and-wing rig

(1) The wing-and-wing method is especially useful when it is necessary to handle loads on both sides of the ship while loading or discharging. It is used mainly in LOTS operation.

(2) This rig can be used to work cargo in the hatch, but unless the coaming is equipped with rollers, the cargo runners will chafe against the coaming wearing out the wire and butting grooves into the coaming.

3-11. RIGGING HATCH TENTS. The definition of hatch tents and the procedures for rigging hatch tents are as follows:

a. Hatch tents are large canvas shelters suspended from the heads of the booms to protect cargo and personnel during inclement weather. Hatch tents are frequently used in areas which have a rainy climate. They may also be used for shade during extreme heat, especially when discharging refrigerated cargo. Hatch tents give only particle protection, so when work is discontinued, responsible personnel should ensure that the hatch is closed and battened to give the cargo better protection. The seattle hatch tent is the best all-purpose hatch tent because it completely covers the hatch and is designed with reeve points and laced-up flaps. Before rigging the seattle hatch tent, the booms must be lowered. Operators will then attach a 10-inch wooden block to the head of each boom on the offshore sides of the link band. From the pier, the blocks will appear on the sides of the booms away from the pier.

b. To rig a seattle hatch tent, the rigging crew will—

- Reeve the gantlines (a length of rope, 3 1/2 inches in circumference) through the 10-inch wooden block secured to the link bank at the head of each boom.

Downloaded from http://www.everyspec.com

- Hoist the tent aboard ship using the ship's fall.
- Tie the hatch boom gantline to the large shackle attached to the metal shoe in the rear peak of the tent. Operators will spread out the tent while it is being raised. The hatch runner is inserted in the opening between the ridges of the tent and then the hatch gantline is heaved up until the bottom of the tent is above the deck. The heavy backstay of the tent is pulled taut, and the gantline is secured.
- Spread the tent over the hatch opening. The guy lines on the corners and center of the sides and back are tightened and secured. The intermediate lanyards are adjusted to keep the tent straight and to prevent sagging.

3-12. RIGGING SAVE-ALLS. Save-alls prevent the loss of cargo overboard during loading and discharging. The rigging crew should rig save-alls at each working hatch and beneath each gangplank, skid or conveyor. The most common type of save-all is a rope net. The type save-all used in the general hatch set is made of manila rope and is 20 by 40 feet, with 8-inch square meshes. If a standard save-all is not available, substitutions may be made. For instance, wire or rope cargo nets may be lashed together or wooden platforms can be constructed and made fast between the ship and the pier under the working area.

a. Responsible crew will rig a save-all using the ship's falls as follows:

- Attach the cargo hook approximately 3 to 4 feet below the top center of the save-all net. Hoist the save-all net over to, slightly above, and then over the ship's railing.
- Secure the lanyards and lashings of the save-all net to the cleats or pad eyes on board ship.
- Lower the net, release the cargo hook, and secure the bottom of the save-all to the stringer on the pier.

b. Riggers should leave enough slack in the save-all to prevent it from being carried away when the tide or current moves the ship higher, lower or away from the pier. Where extremely high tides are common, the lashings should be slacked off or tightened frequently during the change of tide.

3-13. RIGGING STANDARD BOOMS FOR HEAVY LIFTS. The methods for rigging standard booms for heavy lifts are as follows:

a. Most ships are equipped with booms having a safe working load of at least 5 tons. The capacity of cargo booms is usually marked on the boom heel. If the safe working load is not marked on the boom, the ship's officers on watch should have this information.

b. Winches vary in capacity. The exact capacity (leadline pull) is found on the manufacturer's nameplate on the machine. Otherwise, a ship's officer should know this capacity.

c. Whenever the load to be hoisted by the yard-and-stay rig exceeds the safe working load of the rigging, use an alternative rig that will increase the safe working load.

d. Wire rope of 5/8-inch and 3/4-inch diameter is most commonly used for cargo runners, but some vessels are equipped with 7/8-inch runners. The safe working load of 5/8-inch, new improved plow-steel wire rope is slightly more than 3 tons; 3/4-inch wire, slightly more than 4

Downloaded from http://www.everyspec.com

tons; and 7/8-inch wire, slightly more than 6 tons. These safe working loads are for new wire. If the wire has been in use for some time or shows signs of wear, the safe working load must be reduced accordingly.

e. There are many methods of rigging standard booms for heavy lifts. Almost all methods involve doubling up the cargo runner. This process not only doubles the safe working load that is picked up by the cargo runner, but it also decreases the strain on each winch by half. For a lift over 3 tons, 5/8-inch wire is doubled up. Although it is not necessary to double up a 7/8-inch runner to lift a 5-ton load safely, it is necessary to double it up so that the winch will pull the load.

f. Operators must use skill, judgment, and common sense in operating cargo booms rigged for heavy lifts. Signalmen and winch operators must understand that the load should be plumbed underneath the boom before it is picked up. They must know the importance of tag lines in checking the swing of heavy drafts and must be familiar with the safe working load of all types of rigging and slings.

g. In working heavy lifts, responsible personnel must check all standing and running rigging and deck fittings frequently to detect unusual wear or chafing. Operators must ensure the safety of their equipment.

(1) The cargo runner is firmly secured to the drum of the winch. This can be done by reeving the end of the runner through the hole in the drum of the winch, out through the opening in the side of the drum, and twice around the shaft. The runner may be secured either with a rope yarn or wire clamps, but the latter method is recommended. As an additional precaution, winchmen should never operate with less than three turns around the drum of the winch.

(2) Shackles, hooks, and gates of snatch blocks used in rigging are secured with wire or rope before operation. These items should be checked during operation to ensure that they remain in safe condition. In mousing a shackle, operators will tighten and secure the pin with rope or wire.

(a) In all cases where rigging is aloft, wire should be used for mousing. Responsible personnel should use care in not placing mousing where it may be cut by the wire rope as it passes the shackle.

(b) Operators should mouse hooks to prevent slings from slipping off the hook and to prevent hooks from slipping off rings and other fittings. Hooks may be moused with rope or wire, and shackles may be used on certain types of hooks.

(c) Operators should be aware that, unless firmly moused, the gates of snatch blocks may open, allowing the wire to jump out. Many snatch blocks are fitted with a locking pin which, if available, should be used.

h. In making a heavy lift, all personnel in the hatch section must be alert for failures in the gear and other possible hazards. Bridles, slings, and other lifting devices must be thoroughly inspected. The safe working load of any rigging is limited by the safe working load of the weakest part of the rigging; this includes the slinging or lifting devices. The time and effort spent to rig booms for a safe working load of 10 tons would be wasted if an attempt were made to pick up a 10-ton lift using a 5/8-inch wire rope sling.

Downloaded from http://www.everyspec.com

i. Operators should pick up a few inches of a heavy lift and inspect it before it is hoisted. The slings should also be checked and, if necessary, the draft should be lowered and the slings adjusted or blocked off with dunnage to prevent chafing of the wire or damage to the lift. While the load is suspended off the deck, operators should observe the rigging (including the booms, topping lift, runners, and guys) for indication of unusual strain.

j. After operators find everything in order, they should hoist the draft slowly in one continuous operation. All blocks should be running free. Operators should listen to the gear while the lift is being made. A faulty block, wire, or rope under strain sometimes squeaks and groans enough to give warning.

k. When using the jumbo booms, operators will lower the boom to the lowest position, enabling it and any draft to safely clear all obstacles. Operators should avoid swinging the boom at a near vertical angle.

l. Guy winch operators and personnel handling the guys on a jumbo boom should have the signalman in clear sight at all times and should be instructed to stop heaving if at any time the stress on the hauling part appears to be excessive.

m. Operators should check with the mate before making a heavy lift with the jumbo boom to find out whether auxiliary stays need to be set up.

3-14. HEAVY-LIFT BOOMS. Tanks, landing craft, tugs, picket and patrol boats, and other extremely heavy cargo required by the Armed Forces in the field present complex problems in cargo-handling operations. At loading terminals in the Unites States, operators may find loading a heavy lift to be fairly simple. However, at overseas bases, shoreside equipment or floating cranes are not always available. Often the ship's gear must be used for discharging heavy lifts. Many modern ships are equipped with one or two jumbo booms having capacities of 50 to 120 tons. These booms are generally located at the larger hatches of the vessel. Many ships used in task-force operations, particularly in securing beachheads, are equipped with heavy lift gear at practically all hatches for quick discharge of heavy equipment such as landing craft, tanks and bulldozers. A few American ships specially fitted for heavy lifts have jumbo booms with capacities up to 240 tons. All terminal operations personnel operating in the field will have occasion to operate heavy lifts. For this reason, the rigging and operation of the jumbo boom must be understood.

a. Most heavy lift booms are full rigged with topping lifts, purchases, and guy tackles already secure. In order to save space on deck for cargo, the jumbo boom is generally carried in an upright position against the mast (Figure 3-26).

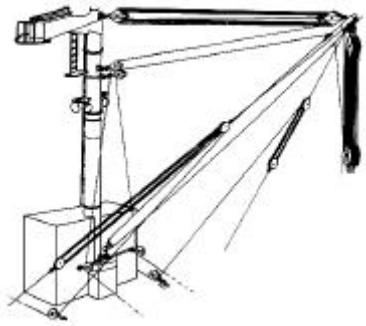

Figure 3-26. Typical jumbo boom

Downloaded from http://www.everyspec.com

b. The first step for operators rigging the jumbo boom is to lead all purchases to power. Sources of power are required for the cargo fall to raise and lower the cargo hook, the topping lift to raise and lower the boom, for each guy tackle to swing the boom from the hatch opening to the pier and return.

(1) If only two winches are located at a hatch, operators may obtain the two additional sources of power from the warping winch, or winches, at an adjacent hatch. On double-rigged hatches, the winches on the opposite end of the hatch are used.

(2) When using sources of power, operators will—

- Lead the cargo runner through a heel block to one winch at the hatch being worked.
- Lead the topping lift through another heel block to the second winch at the hatch being worked.
- Shackle the two guys to pad eyes, and lead the hauling parts of the guys through a series of snatch blocks to the additional sources of power.

c. At this point users should have led all purchases to power and made the guys fast; however, the boom is still held fast to the mast. Users should check, secure and tighten the shrouds and stays if necessary.

d. Users should them remove the collar or lashing that holds the boom to the mast by taking a strain, if possible, on the topping-lift wire to release the pressure on the collar or lashing. In vessels where this is not possible, users may employ breasting-up line by—

- Making the breasting-up line fast to the boom, either by passing it around the boom or shackling it into a pad eye that may be on the boom for this purpose. Users should then pass the line through a snatch block on the mast and fairlead it to the cathead on the winch.
- Taking a strain on the breasting-up line and releasing the collar or lashing that holds the jumbo boom in place.
- Slacking off the line slowly until the weight of the boom is on the topping lift.
- Removing the breasting-line and lowering the boom into position with the topping lift.

NOTE: Personnel must be sent aloft to release the boom.

e. Users should be familiar with the following procedures for guying heavy-lift booms. The rated capacity of a boom is the safe load that it will lift when it is properly rigged, guyed, and operated and when the stays are properly placed. Responsible personnel should use care in rigging to prevent undue strain on the boom and the guys.

(1) On single-rigged hatches, personnel should use the anchor windlass for the forward jumbo boom and the mooring or warping winch for the after jumbo boom. They may do this by leading one guy over the top of one cathead and the other guy underneath the other cathead so that one guy is pulling while the other is slacking off. Experienced personnel should tend the guys. All personnel should understand the direction of rotation of the winch or windlass so that when the proper signals are given, a slow, smooth operation will result with minimum strain on the

Downloaded from http://www.everyspec.com

take-up guy. On double-rigged hatches, personnel may lead the guys to the winches on the opposite end of the hatch.

(2) As the guys approach the vertical, the strain on the guys and the boom increase while the angles between the guys and the boom decrease. To place the guys properly, operators should give the guy with the greatest strain the largest angle between the guy and the boom. Figure 3-27 shows the horizontal strains involved when the guys are placed on a heavy-lift boom for loading from or discharging to a pier. In this figure, users may assume that the ship is being unloaded. The outboard guy has been so placed that the angle between the guy and the boom is 15 degrees. A 3,000-pound pull is placed on the inboard guy while the brakes are applied on the outboard winch. The strain would be of about 4,230 pounds on the inboard guy and 11,580 pounds on the outboard guy. Decreasing the angle between the outboard guy and the boom by 10 degrees triples the strain. Shifting the outboard guy too far forward will cause too steep an angle with the boom, particularly if the boom has to be raised to handle cargo in the after part of the hatch.

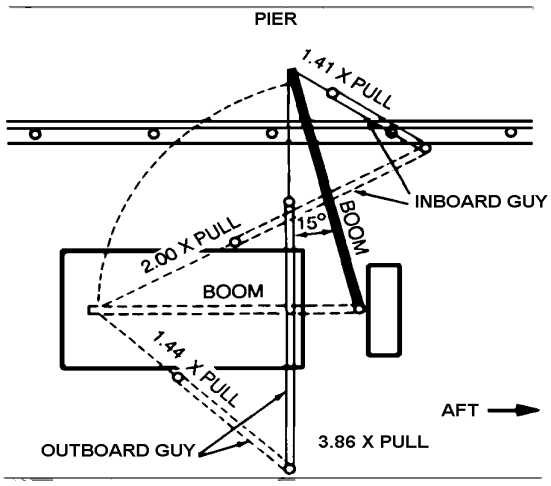

Figure 3-27. Proper guying of jumbo boom

f. Before operating the jumbo boom, users should familiarize themselves with jumbo boom operations by swinging the standard hatch booms clear of the working area. Generally, it is sufficient to swing these booms against the shrouds and secure them with their guys or it may be necessary to top them when working deck cargo. Users should also check gear thoroughly to ensure that--

- Blocks are running free.
- No lines are chaffing.
- The turns on the winches lie evenly.
- Snatch-block gates are securely moused to prevent opening.
- Guy tackles are free of twists and are guided through fairleads to sources of power.
- Stays are secured and tightened.

g. Operators should ensure that signalmen, winchmen, and personnel tending guys clearly understand all signals. Additional signalmen may be needed to relay signals to personnel tending guys at the windlass or warping winches. However, the number of signalmen should be kept to a minimum.

Downloaded from http://www.everyspec.com

h. Operators should sling the draft carefully and shackle the slings into the traveling block on the cargo runner. After a final check to see that everything is secure, they will then hoist the draft a few inches off the deck and recheck all rigging.

i. Operators should avoid faulty winch operations, sudden stops, and quick starts. Properly planned heavy-lift operations move slowly and smoothly.

j. Operators will carefully hoist the draft until it clears the hatch coaming and rail.

k. Operators will adjust the angle of the boom by taking up or slacking the topping lift.

l. Every change in direction of the boom requires an adjustment of the guys. As the boom is raised, responsible personnel should slack off the guys; as it is lowered, these personnel should tighten the guys.

m. The boom is swung by taking up one guy and slacking the other. When working a jumbo boom, operators should give close attention to handling the guys. When a boom is swung either inboard or outboard, one guy is the hauling guy and the other is the following guy. Operators should maintain the right amount of slack in the following guy to prevent undue strain on the hauling guy. Too much slack in the following guy might allow the draft to get away.

n. The uniform system of signals recommended for use in directing jumbo boom operations is shown in Figure 3-28. The signals in use should be posted at the operator's position at the signal control points and at such other points as necessary to properly inform those concerned. When hand signals are used, only one person should be designated to give the signals to the operator. The signalman must be located so as to be clearly visible to the operator at all times. Only persons who are dependable and full qualified by experience with the operation being directed should be used as signalman. A warning device or signalman should be provided wherever there is danger to persons from moving equipment.

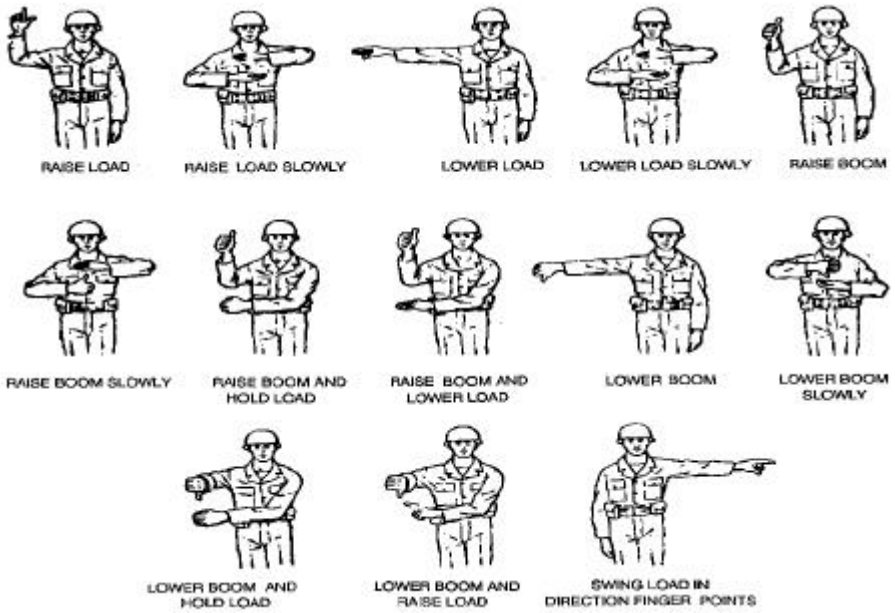

Downloaded from http://www.everyspec.com

Figure 3-28. Jumbo boom signals

o. When the unloading of one hatch is complete, responsible personnel should shift the jumbo boom to the next hatch by—

- Swinging the boom to the centerline of the ship.
- Raising the boom until it is nearly vertical (about 85 degrees), and at the centerline of the ship. A limit switch is used to cut off topping winches when the boom is raised to 85 degrees above horizontal.
- Suspending the lower cargo hoist block to a position that is easy to reach from the winch house.
- Securing the handling pendant to the lower cargo hoist block and raising the lower block to about 10 feet from the upper cargo block, then passing the pendant through the opening in the king posts and outboard to portside of the cargo hoist hauling part.
- Hauling in on cargo falls until the boom head cargo blocks rotate and the boom passes through the opening of the king post to reposition itself at 85 degrees toward the adjacent hold.
- Reversing this procedure to move the boom back from the adjacent hold to the original hold.

3-15. MODERN JUMBO BOOMS. Technological advances have increased the ability of a single jumbo boom to handle heavy cargo loads at either of two adjacent holds. These booms have been put on a limited number of new ships; they may also be installed on ships already in operation.

a. Operators may accomplish the adjacent hold operation with one boom and related gear located between the two hatches. The boom is stepped on a ball-and-socket heel assembly and is supported at its upper end by twin topping lifts from rotating heads on two unstayed king posts. The boom heel has a ball pivot fitting which permits a 3 degree port or starboard tilt of the boom head when being passed between king posts to the opposite hatch. Each of the two topping lifts has a winch. The split topping arrangement provides quick and accurate positioning of the boom throughout its travel of the vessel, either inboard or outboard. The upper block of the cargo falls is supported from a rotating sleeve near the base of the boom. The lower block of the cargo falls is weighted and fitted with a hook or other attachment, as desired.

b. Operators position the boom by operating the topping lifts. The desired position of the boom may be reached by operating the topping-lift winches so as to properly take in or pay out on the topping lifts.

c. Operators will shift the boom from one hold to another by—

- Swinging the boom to the centerline of the ship.
- Raising the boom until it is nearly vertical (about 85 degrees), keeping the boom at the centerline of the ship. A limit switch can be set to cut off topping winches when the boom is raised to 85 degrees above horizontal.
- Suspending the lower cargo hoist block to a position accessible from the winch house.

Downloaded from http://www.everyspec.com

- Securing the handling pendant to the lower cargo hoist block and raising the lower block to about 10 feet from the upper cargo block; then passing the pendant through the opening in the king post and outboard to portside of the cargo hoist hauling part.
- Hauling in on cargo falls until the boom head and cargo blocks rotate and the boom passes through the opening of the king post to reposition itself at 85 degrees toward the adjacent hold.
- Reversing this procedure to move the boom back from the adjacent hold to the original hold.

3-16. SINGLE SWINGING BOOM. A single swinging boom may be used—

- When only a single boom is rigged at a hatch,
- When one boom is damaged and cannot be used.
- When it is necessary to load or discharge oversize light drafts.
- When one of the ship's winches needs repairs.

a. To rig a single swinging boom on a standard vessel so that the boom is raised or lowered during the operation, the operator must ensure that—

- The cargo runner on the boom not being used is run off the drum of the winch, and the boom is swung out of the way. The topping-lift wire of the working boom is fastened to the drum of the winch after the cargo runner is removed.
- The winch serving the working boom is used to raise and lower the cargo runner on the working boom.
- Two guys are used to swing the boom from side to side. Both guys are secured at the head of the boom leading to the pad eye ring on deck or on the rail. Power to move the boom from side to side is furnished by using another set of winches, one for each guy. If power is not available, the boom is swung by hauling on the guy tackle by hand.

b. A single swinging boom is rigged to handle loads within the safe working load of the cargo runner, but it is often necessary to lift loads that exceed the safe working load of the cargo runner. Loads that are within the safe working load of the boom, but which exceed the safe working load of the cargo runner, may be safety lifted by rigging the boom as follows:

(1) Top the amidship boom and swing it out of the way, and lower the outboard boom to the boom rest.

(2) Fasten the topping-lift wire and the guys.

(3) Equip the outboard boom with a runner long enough to permit doubling up. An additional 14-inch block is required.

(4) Reeve the end of the cargo runner through the 14-inch block and secure the block by either of the following methods:

(a) Using a boom with a doubling-up pad eye. Some booms are equipped with this type of pad eye (Figure 3-29, see page 3-36) about 4 feet from the head of the boom in line with the pad eye splice in the cargo runner is shackled into the doubling-up pad eye. If

Downloaded from http://www.everyspec.com

available, a swivel may be made fast to the doubling-up pad eye, and the end of the cargo runner may be shackled into the swivel. This reduces the tendency of the wire to twist by taking the turns out of the wire at the swivel.

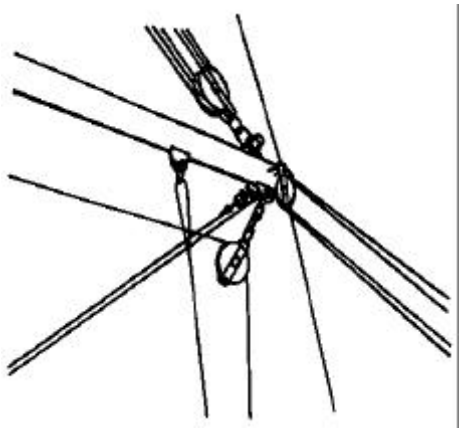

Figure 3-29. Doubling-up cargo runner using doubling-up pad eye

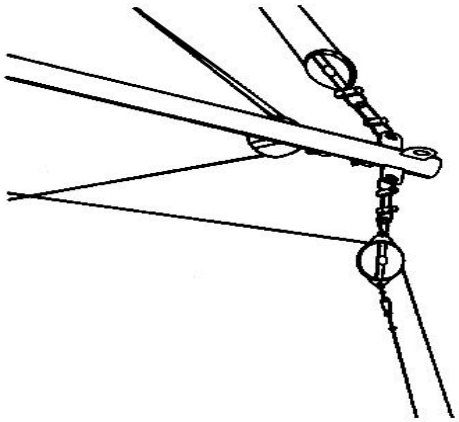

Figure 3-30. Doubling-up cargo runner using bottom of the block

(b) Using double becket blocks when available. Most cargo blocks used aboard vessels are double becket blocks. These blocks are constructed so that shackles and swivels can be attached to both the top and bottom of the blocks. Where these blocks are in use and there is no doubling-up pad eye on the boom, the eye splice in the cargo runner can be shackled into the bottom of the cargo block (Figure 3-30) or into a swivel attached to the block. It must be remembered that the shackled or swivel at the bottom of the block must have a safe working load of at least half the weight to be lifted. A 5-ton lift would require a shackle 3/4-inch or larger.

(5) Operate the boom in the same manner as the single swinging boom, single-rigged.

(6) If it is not impossible to double up the rigging using either of the methods described in paragraph (4)(a) and (b), secure the runner to the boom by taking two complete turns on the boom about 4 feet from the head and securing the eye splice to the link band (Figure 3-31).

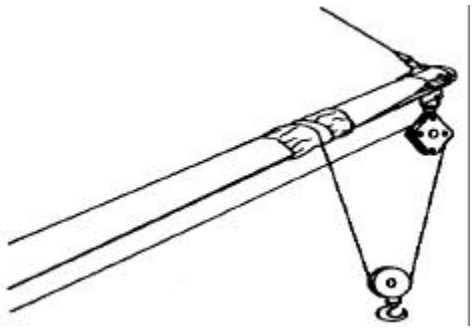

Figure 3-31. Doubling-up cargo runner by taking turns on the boom

Downloaded from http://www.everyspec.com

3-17. YARD-AND-STAY RIG WITH DOUBLE PURCHASE. Doubling up with a swinging boom (Figure 3-32) greatly increases the time required to transfer the load from the pier to the ship or vice versa. Operators can save time by using fixed booms rather than changing to a swinging-boom operation. This is especially important when many loads just over the safe limit are to be handled. These loads can be handled at about half the rate of ordinary 1- or 1 1/2-ton drafts; light filler cargo can be handled without stopping the operation to single up the rigging. One of the easiest methods of augmenting the load limits is to rig both booms with a double purchase. This step requires two additional 14-inch blocks. In working this rig, guys and preventers must be in excellent condition and equalized as nearly as possible.

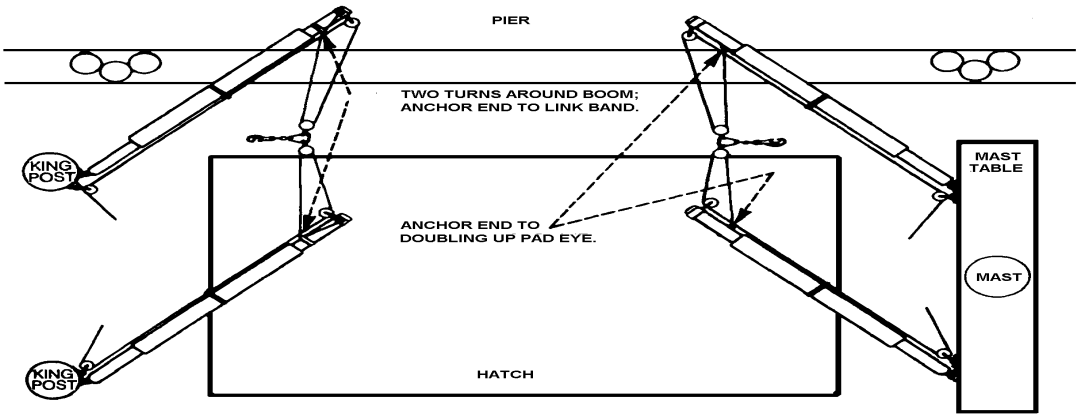

Figure 3-32. Yard-and-stay rig with a double purchase

a. The cargo runner of each boom is double up using either of the methods mentioned previously. If the doubling-up pad eye or the boom is used, the hauling part of the cargo runner must be on the inside. If the cargo runner is secured to the boom by turns, the turns must be started on the inside of the boom so that the hauling part of the runner is on the inside. These precautions prevent the hauling part from chafing against the standing part because the hauling part leads from the heel block to the head block.

b. When both booms have been doubled up, the two traveling blocks are married by shackling in a standard cargo hook assembly. The booms are topped, spotted, and worked as in a regular yard-and-stay operation.

3-18. BLOCK-IN-BIGHT RIGGING ON DOUBLE-RIGGED HATCH. The procedures for the block-in-bight rigging on double-rigged hatch are as follows:

a. Operators can handle heavy lifts at a hatch rigged with two pairs of standard cargo booms by rigging all four booms as shown in Figure 3-33, page 3-38 and performing the following steps:

(1) Lower the cargo hook on the nonworking set of gear and remove the cargo hook assembly.

NOTE: In this chapter, nonworking means not being used in the operation only. Gear in all other senses is operational.

Downloaded from http://www.everyspec.com

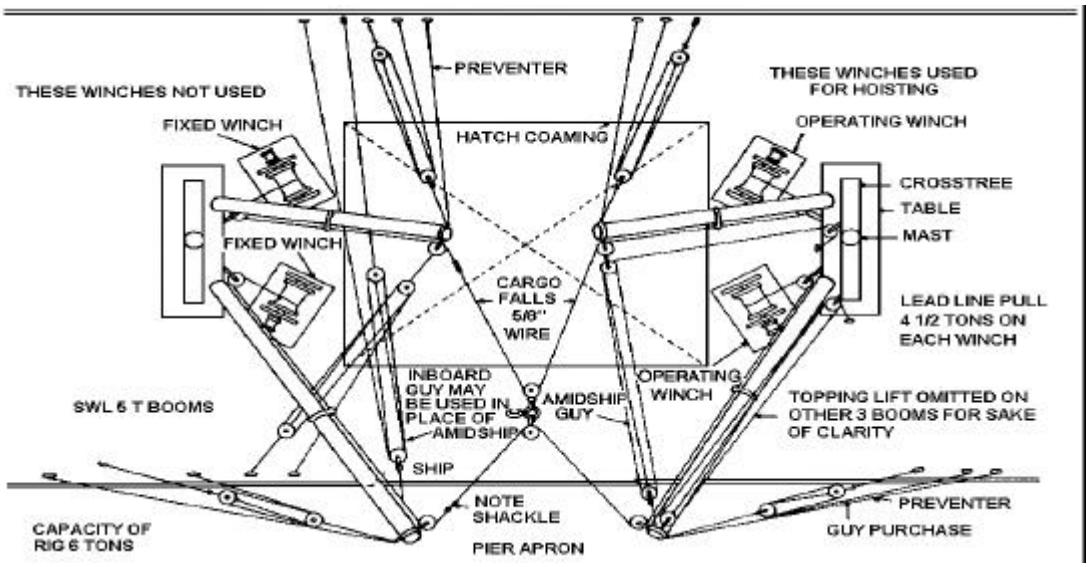

Figure 3-33. Block-in-bight method of rigging four booms

(2) Place two additional 14-inch deep-throat blocks on deck and attach them to the cargo hook assembly.

(3) Lower the cargo hook of the working set of gear and remove the cargo hook assembly.

(4) Reeve the hatch runner of the working set of gear through a 14-inch deep-throat block and shackle the eye to the hatch runner of the nonworking set of gear.

(5) Reeve the outboard runner of the working set of gear through the other 14-inch deep-throat block. Then shackle the eye to the eye of the outboard runner of the nonworking set of gear.

(6) Raise the runner on the nonworking set of gear until the shackles (where the eyes are attached) are 3 to 4 feet from the head of the booms. (This step requires two winch operators.)

(7) Shut down and secure the winches on the nonworking set of gear.

NOTE: While the winch operator of the nonworking set of gear raises the runner, the winch operator of the working set of gear must slack off on his runner.

(8) Be sure that booms are properly spotted and guys and preventers are equalized.

b. Operators may now load and discharge heavy lifts not exceeding the safe working load of two parts of the cargo runner, the guys and preventers or the combined safe working load of two

Downloaded from http://www.everyspec.com

booms using the usual yard-and-stay method. This type of rigging has the advantage of being quickly rigged without the necessity of lowering booms. Only two winches are required, and the gear may be readily singled up for ordinary light drafts.

c. Many modern vessels are equipped with topping-lift winches which are used only for topping or lowering the booms. When the operator spots the boom, he shuts off the winch with the topping-lift wire remaining on the winch. This action permits the booms to be raised or lowered rapidly simply by operating the topping-lift winches. Almost all heavy-lift operations require a dragline operation. If topping-lift winches are available, double-rigged hatches may be rigged with the block-in-bight method as follows:

(1) Lower the booms in the after end of the hatch and remove the runners and headblocks from the booms.

(2) Reeve the cargo runners of the forward booms through 14-inch blocks, and shackle the runners to the link band of the opposing booms.

(3) Marry the two doubling-up blocks for regular yard-and-stay operations and raise the after booms to the desired height.

(4) Spot the booms and make certain that guys and preventers are equalized.

(5) Work heavy lifts as described in paragraph 3-19a using the winches at the forward end of the hatch. The winches at the after end are available for dragline operation only.

d. Operators can rig using the method described in paragraph 3-19a much faster than that described in paragraph 3-19b, but this method is for emergency use only. The time lost in lowering and raising the booms by using the topping-lift winch will be more than made up by having two winches available for dragline operation. Operators can move lifts landed in the hold to their stowage place in the ends or wings of the hold during loading or into the square of the hatch during discharge. Operators can proceed with the dragline operation while the previous load is moving to or from the ship and while the crew are hooking on the next load or unhooking the previous load.

3-19. FOUR BOOMS DOUBLED UP ON DOUBLE-RIGGED HATCH. The procedures for four booms doubled-up on double-rigged hatch are as follows:

a. Winch operators must be highly skilled to rig four booms with a double purchase (Figure 3-34, page 3-40). This method should not be used except in case of emergency.

b. Operators may use the method of rigging on a double-rigged hatch to handle loads up to the combined safe working load of two booms, provided the safe working load of two parts of the cargo runner equals or exceeds the combined safe working load of two booms. To lift a load of 9 long tons on a double-rigged hatch using the block-in-bight method, operators must use 7/8-inch cargo runners. The safe working load of two parts would be approximately 10 tons. It is also possible to handle a 9-ton lift on a double-rigged hatch using small cargo runners by doubling up all four booms. Operators should use the following method:

(1) Place four 14-inch deep-throat blocks, two standard 14-inch blocks, two 1-inch wire rope slings, and four shackles, 1 1/4-inch or larger, on the deck.

Downloaded from http://www.everyspec.com

(2) Insert the 1-inch wire rope slings through the standard 14-inch blocks and shackle eyes to the bottom of 14-inch deep-throat blocks.

(3) Lower the aft booms, lead the cargo runners through 14-inch deep-throat blocks, and attach them to the head of the booms (as described earlier). Then raise the aft booms.

(4) Lower the forward boom and repeat the previous step.

NOTE: Two winch operators are now required.

(5) Spot the boom for operation.

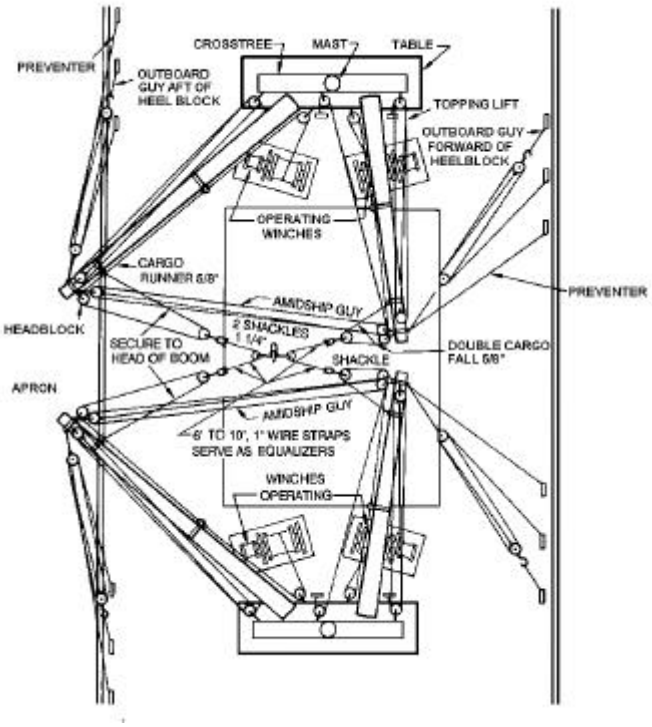

Figure 3-34. Rigging four booms with a double purchase

3-20. HAGGLUNDS CRANE. The electric-hydraulic (el-hydr) Hagglunds twin crane consists of two single cranes placed on a common platform. One of the single cranes in each twin crane set is the master and the other is the slave crane. Each single crane is dimensioned according to its specification and has a slewing platform, jib, pulley block (fastened to the column mast), hoist rope with load hook, driver's cabin with control panel, and pump unit. The pump unit is driven by an electric motor via a distribution gear to which the pumps (of hydraulic variable axial piston type) are directly connected. For each of the movements hoist, slewing, and luffing, there will be a hydraulic pump. Each of the pumps delivers oil to hydraulic motors (of radial piston type) fitted on the hoisting, winch, the luffing winch, and the slewing gear (see Figure 3-35).

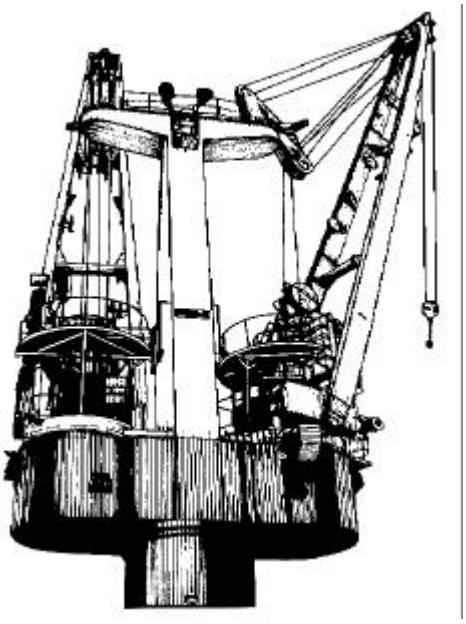

Figure 3-35. Hagglunds crane

Downloaded from http://www.everyspec.com

a. **Theory of Operation.** The theory of operation for the Hagglunds crane is listed below.

(1) The Hagglunds crane can hoist, luff, and slew cargo within its rated load capacities and physical operation parameter in the single or twin mode. The Hagglunds crane has control features allowing single mode operation from one cab (master cab only). Twin cranes are used for teamed operation with heavy lifts. During a single mode operation, each crane is independently operated. The Hagglunds crane is capable of auto spotting during crane operation (see Figure 3-36).

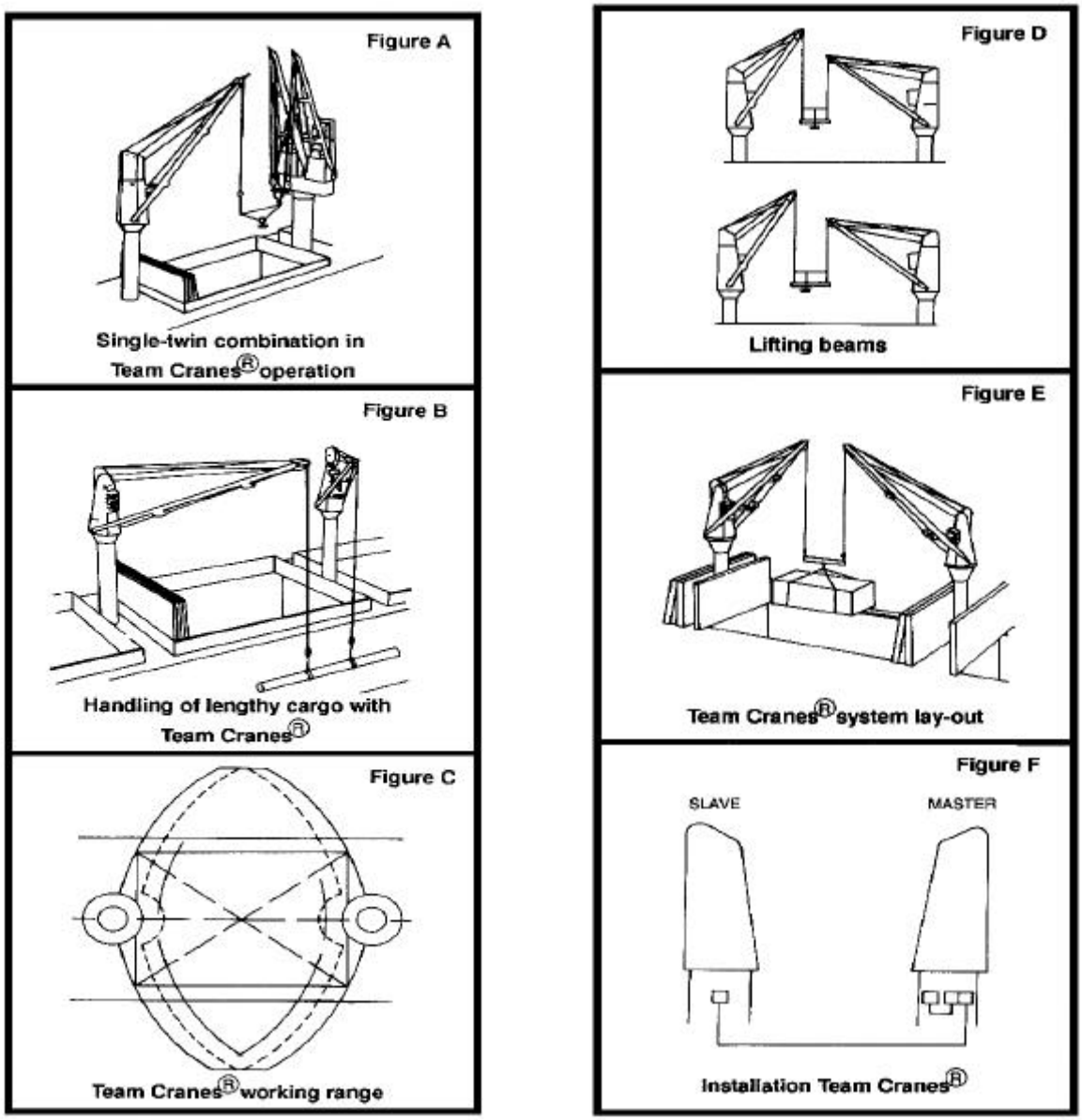

Figure 3-36. Various crane layouts for operations

(2) For twin operation purposes, each twin crane is delivered with a 60-ton (32-ton) traverse. For container operations the cranes are fully quipped with automatic spotting devices and spreader control equipment.

Downloaded from http://www.everyspec.com

b. **Craneman's Cab.** The craneman's cab affords an excellent all-around view of the entire work area and ready access to the two control levers. One lever controls the hoisting winch, the other controls the luffing and slewing movements. The cab also contains control panels with various switches, control buttons, and signal lamps.

c. **Jib/Boom.** The jib is made up of two box girders, jointed by transverse tubular steel struts. The foot of the jib mounts on two trunnion journals at sides of the crane house skirt. On the inside of one of the longitudinal members is a dial with a balanced pointer that continually indicates the actual jib point radius in meters. A mercury lamp floodlight is also mounted on the jib. The jibs are 81 feet in length.

d. **Crane House.** The crane house encloses all mechanical and hydraulic machinery and associated electric equipment. The crane house protects this machinery and equipment against rain, sleet, and waves breaking over the ship. Two large-size doors in the crane house give access to the enclosed machinery for ease of inspection and maintenance.

e. **Emergency Shutdown Switches.** The Hagglunds crane has four emergency shutdown switches. One switch is located at the base of the crane house to shut down both cranes, one is located in the center of the engine room, and one each is located in the master crane engine room and the slave crane engine room.

f. **Single/Twin Platform.** A Hagglunds hydraulic twin crane set consists of two single cranes mounted on a common platform. The cranes may be operated independently or interconnected for twin operation. When operated independently, these cranes function the same as ordinary angle cranes.

g. **Hoisting/Luffing Winch.** The hoisting and luffing winch are mounted on the base of the crosstree. The drum and hydraulic motors are flange-connected and equipped with spring-loaded band brakes (hydraulic lifted, which means if power or pressure failure occurs the drum will stop). The drum is grooved for accepting the wire and dimensioned for having only one layer of wire. A sensing device will stop hoisting when wire tends to form a second layer; also the sensing device for an empty drum will stop when two turns are left on the drum.

h. **Slewing Lock.** The slewing locks (Figure 3-37) are located on the platform of each crane. The purpose of the slewing lock is to lock or unlock the platform so that the crane can operate in the single or twin mode.

i. **Single Mode Operation.** Each crane (master/slave) can be operated in a single configuration by unclamping the slewing locks and making arrangements for single operation. In the single mode, each crane can lift a maximum of 35 long tons at a 105-foot radius and 50 long tons at an 85-foot radius.

Downloaded from http://www.everyspec.com

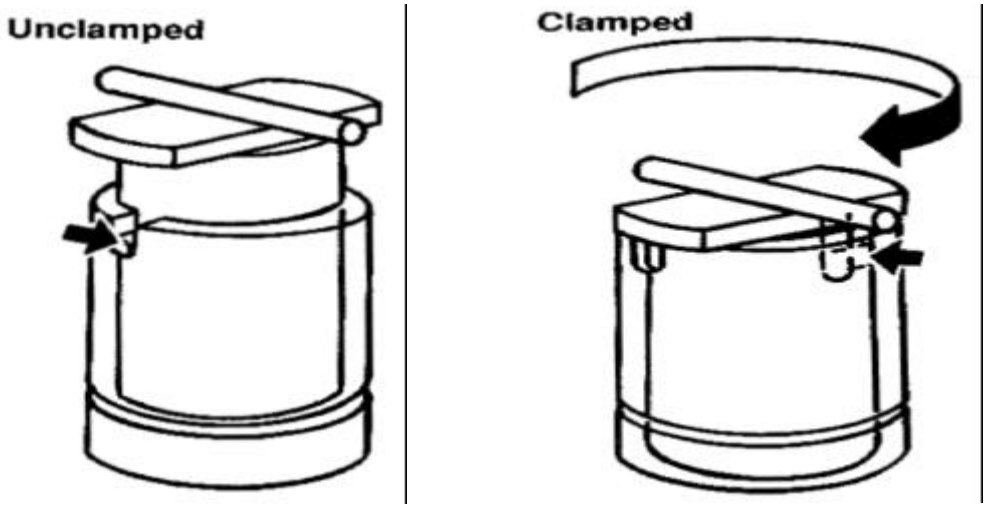

Figure 3-37. Slewing locks

j. **Twin Mode Operation.** The Hagglunds crane can be operated in the twin mode and lift a maximum of 200 long tons at an 85-foot radius and 70 long tons at 105 feet. To operate in the twin mode, the selector switch in the master crane must be placed in twin position and the slewing platforms must be locked. To operate in the twin mode, only one operator is needed.

k. **Rider Block Assembly.** The rider block frame is a fabricated steel structure that contains a wire rope sheave with a lifting capacity of 20 tons. The rider block "rides" on the main hoist wire rope falls and allows positioning of the load and prevents excessive swaying.

1. **Equalizing Bar.** The equalizing bar is a fabricated steel beam containing a single swivel hook. The bar is attached to the rider block assembly of each crane for load equalization in the twin mode. The bar allows positioning of the load and prevents excessive swaying.

m. **Sling and Bridle Rigging.** The crane blocks are fitted with "ram's horn" type double hooks. Two methods of attaching ram's horn (Figure 3-38) are as follows:

- Shackle the ring of eyes of the lifting sling to a short wire bridle that has eyes at each end. Place the two eyes of the bridle over the two horns of the cane hook.
- Use 2 two-legged slings per lift, and place the rings of each sling over separate horns of the hook.

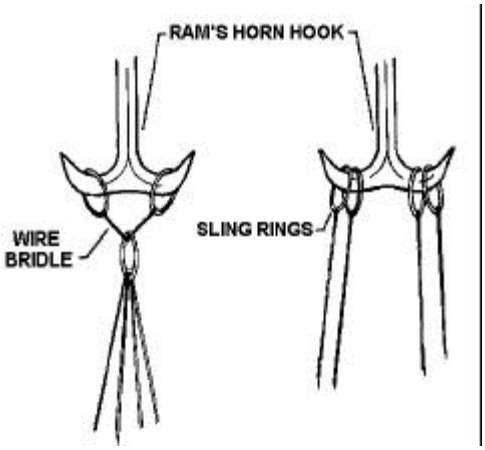

igure 3-38. Two methods of attaching slings to ram's horn

Downloaded from http://www.everyspec.com

n. **Cargo Spotting Device.** The cargo spotting device is used to position the load in a hold or on the quay. The cargo spotting device has a swivel housing with built-in machinery and one lifting eye in the upper part and one clevis in the lower part (Figure 3-39).

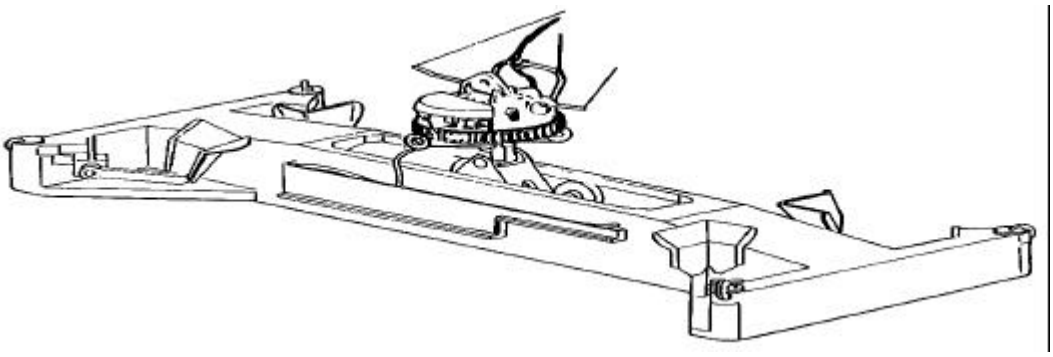

Figure 3-39. Cargo spotting device with container spreader

o. **Container Spreader Device.** The Hagglunds hydraulic spreader is designed to handle 20- and 40-foot containers according to ISO specifications. With this in mind, Hagglunds has designed a compact, low profile device providing mechanical connection of the spreader directly to a cargo spotting unit. The spreader is equipped with an automatic tilt corrector for longitudinal axis of the containers. The tilt corrector ensures that the container will be kept in the horizontal position. The spreader is controlled entirely from the driver's cab and is equipped with guide arms and remote-controlled retractable twist locks. This makes it necessary to station men on the dock or in the ship for location and securing.

(1) The spreader has a built-in, self-leveling device which can compensate for center of gravity displacement. Compensation is automatic but can be overridden by manual control. The spreader is remote-controlled from a panel located in the driver's cab. In case of cranes operated from a portable black box, the spreader controls will be in the same assembly.

(2) In order to avoid puncturing or damaging the container, the underside of the spreader is completely flush as the twist locks are retracted. This means that the spreader can be dropped onto the container top, eliminating counterswing. When the spreader is then lifted slightly, it can easily be positioned so that the retractable guides locate the corners of the container and adjust the relative position correctly.

3-21. HAND SIGNALS FOR HAGGLUNDS CRANE OPERATION. Crane hand signals are needed for a successful loading operation. Due to the size and depth of the ship, it is extremely important that hand signals are given correctly. When giving these signals, the signalman must be in clear view of the crane operator. The Hagglunds crane signals are shown in Figure 3-40.

Downloaded from http://www.everyspec.com

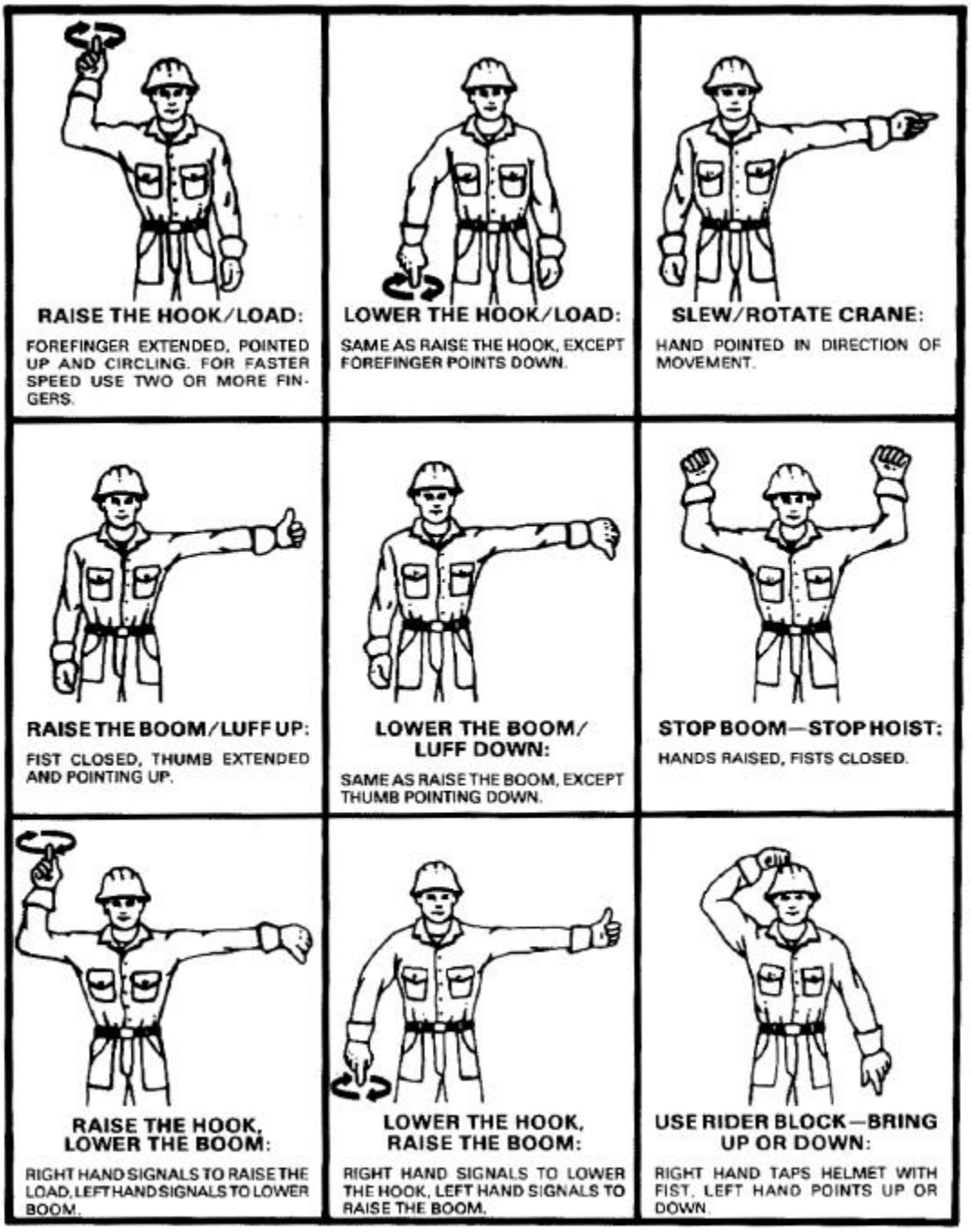

Figure 3-40. Signals for Hagglunds crane operation

Downloaded from http://www.everyspec.com

CHAPTER 4

CARGO-HANDLING GEAR

4-1. INTRODUCTION. Cargo-handling gear is used to secure cargo while it is being raised or lowered by the ship's gear. It also moves cargo to and from its stowage position in the ship. Proper training in the selection and use of cargo-handling gear is necessary for safe and efficient cargo operations. As terminal operations coordinator, you are responsible for training and supervising your personnel in the methods prescribed by this chapter.

4-2. GENERAL-PURPOSE GEAR. General-purpose gear is used with many types of cargo. This type of gear includes—

- Endless slings.
- Single slings.
- Combination slings.
- Chain slings.
- Canvas slings.

The ends of slings are usually made up into eyes, either with or without thimbles (Figure 4-1). The eyes fit on the cargo hook and attach to the drafts or loads of cargo. By these eyes, a sling is joined to another sling, a hook, or a ring, either directly or by using a shackle. Thimbles in the eyes strengthen the sling by protecting it from sharp bends around pins, hooks, shackles, links, rings, and similar objects.

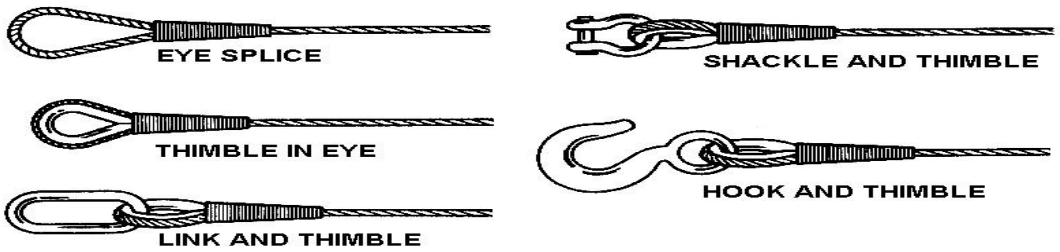

Figure 4-1. Sling eyes

a. **Endless Slings.** Splicing the ends of a piece of wire or fiber rope makes an endless sling. It is simple to handle and can be used in several different ways to lift loads. The endless sling is most commonly used as a choker hitch. When the endless sling is used as a choker, personnel pass it around the draft or cargo forming a loop on top of the draft. The other end is passed through this loop, pulled tight and attached to the cargo hook. To balance the load, personnel spread apart the two parts of the sling on the bottom of the draft.

(1) The endless sling is also used with chime or running hooks. It may be used as a basket sling or a vertical sling (Figure 4-2, page 4-2).

Downloaded from http://www.everyspec.com

(2) Personnel should not use endless slings to lift bagged cargo such as sugar, flour, and cement. These types of items require canvas slings.

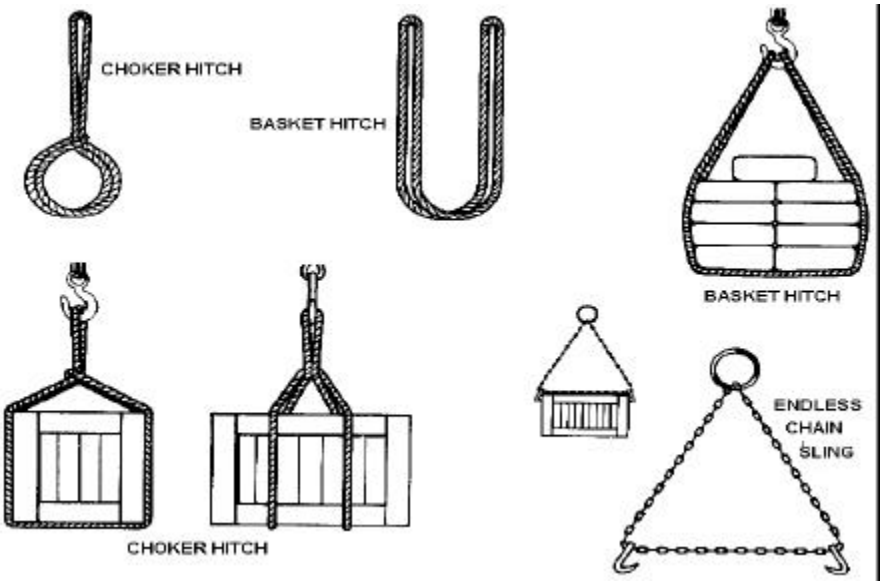

Figure 4-2. Types of endless slings

b. **Single Slings.** A single sling is made of fiber or wire rope. Each end of the single sling is made up with an eye, a hook, a ring, or a thimble, depending on the intended use of the sling. A single sling may be used as a vertical sling, a basket sling, or a choker sling with a choker hitch (Figure 4-3). Single slings made of fiber rope are used for light loads and for cargo that might be damaged by wire slings. Slings made of wire rope have a variety of uses. They are made in lengths ranging from 5 to 150 feet or longer for special cargo. Running hook wire rope slings may be used to hoist drafts of lumber, dunnage, iron pipe, building steel, strong boxes, and large cases (Figure 4-4). Each running hook sling is made with 18-inch eyes at each end. Personnel use the sling by wrapping it around the draft, attaching one eye to the sliding hook, and putting the other eye on the cargo hook.

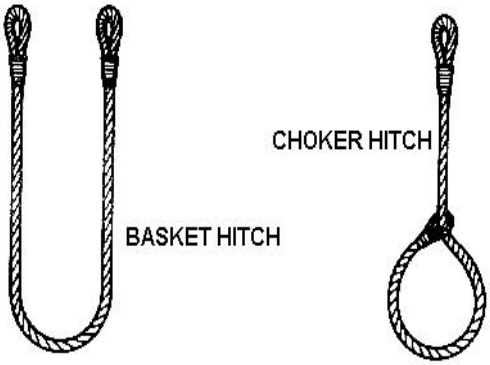

Figure 4-3. Ways of using single slings

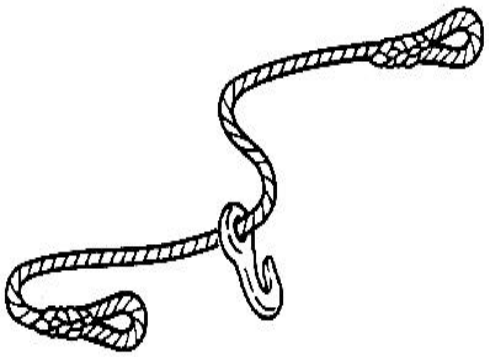

Figure 4-4. Running hook wire rope sling

Downloaded from http://www.everyspec.com

c. **Combination Slings.** Combination slings (Figure 4-5) combine two or four single slings to form a bridle, basket, or choker sling. Combination slings can lift virtually any type of load. When several slings are passed under large crates or boxes to form a basket sling, cargo handlers should use spreader bars to prevent crushing.

Figure 4-5. Combination slings

d. **Chain Slings.** These slings are used mainly for handling steel rails, pipes, beams, and angles. Chain slings are used in bridles or single legs (Figure 4-6). Cargo handlers should use dunnage between the chain and the draft to prevent slipping. If necessary, dunnage also should be used between individual pieces in the draft. When hoisting cargo of this type, cargo handlers should make a round turn (complete) with the chain around the draft. Cargo handlers also use chain choker slings (Figure 4-7). Chain choker slings are used to handle such cargo as steel rails, pipes, and steel beams. Cargo handlers place dunnage in such a way to give the sling a better grip. The sling's links are wrought iron; this iron will stretch before it breaks, thus giving warning. Other types of iron may simply crystallize and snap. Watch for warning signs such as stretching links, fracturing, and stretching hooks.

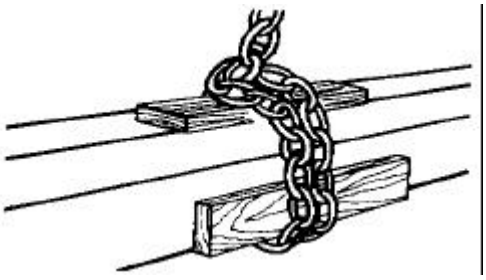

Figure 4-6. Chain sling

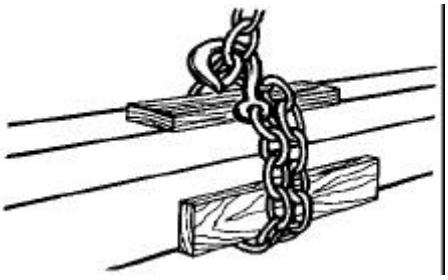

Figure 4-7. Chain choker sling

e. **Canvas Slings.** A canvas sling is a rope sling with a section of canvas sewn between the ropes (Figure 4-8). The main type of canvas sling in use is the dirt sling. In commercial practice, canvas slings similar to dirt slings are used for handling cargo such as nitrate.

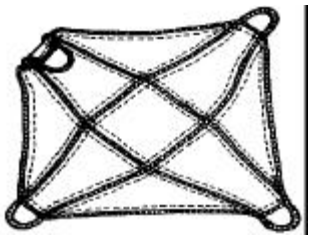

Downloaded from http://www.everyspec.com

Figure 4-8. Canvas sling

4-3. SPECIAL-PURPOSE GEAR. Special-purpose gear is made for use with certain types of cargo. It includes—

- Cargo nets.
- Pie plates.
- Pallets.
- Bridles.
- Plate-handling clamps.

a. **Cargo Nets.** Cargo nets are usually made of manila rope, but nets of wire rope are used for special cargoes. The standard Army cargo net is 14 by 14 feet with a 7 7/8-inch square mesh. The square meshes are made of 2 1/2-inch circumference manila rope. The line around the circumference of the net is made of 3-inch circumference manila rope. Cargo nets are used to handle loose packages that are not all the same size. The package must be strong enough to withstand pressure. When making up a draft in a cargo net, cargo handlers should stack the cargo so that the crushing effect of the net is kept to a minimum.

b. **Pie Plates.** The crushing effect of a cargo net may be reduced by using a round “pie plate" (Figure 4-9). Pie plates are constructed of two dunnage layers. They vary from 54 to 72 inches in diameter. Personnel place the pie plate in the center of the net and tack the cargo so that all the weight is on the pie plate. If pie plates or pallets are not available, cargo handlers use cargo boards to reduce the crushing pressure of the cargo net. Cargo boards are constructed of two layers of dunnage nailed together to make a solid board measuring 4 by 6 feet. The cargo board is placed in the center of the net and is used in the same way as a pie plate.

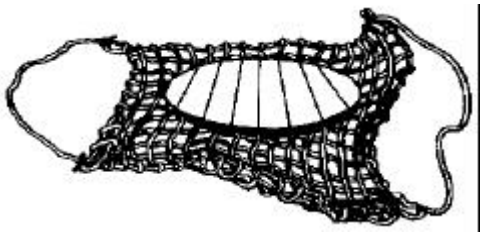

Figure 4-9. Pie plate

c. **Pallets.** The four basic types of pallets used in military cargo handling are the stevedore, general-purpose, sled, and warehouse pallets.

(1) A stevedore pallet, which is reversible, is used to handle loose cargo at water terminals (Figure 4-10). The standard stevedore pallet is 4 feet wide, 6 feet long and 8 inches high. The stringers are made of 3- or 4- by 4-inch lumber. The deck boards are made of lumber 2 inches thick. The outside boards may be random widths. The outside stringers are set in 4 to 6 inches from the ends so that a pallet bridle may be inserted. The inside stringers are arranged to permit easy entrance of forks for movement by forklift trucks.

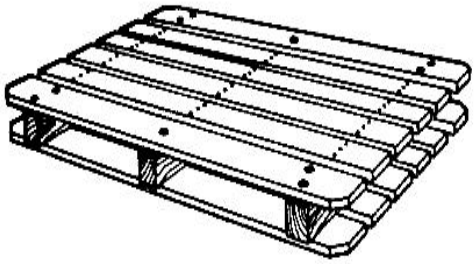

Downloaded from http://www.everyspec.com

Figure 4-10. Stevedore pallet

(2) A general-purpose pallet is a four-way-entry wood pallet, 48 inches long, 40 inches wide, and approximately 5 1/2 inches high (Figure 4-11). This pallet is used mainly for the shipment of palletized cargo and often accompanies the cargo from shipper to consignee.

(3) The sled pallet is a heavy timbered platform with runners (Figure 4-12). Supplies and equipment are normally banded to the pallet.

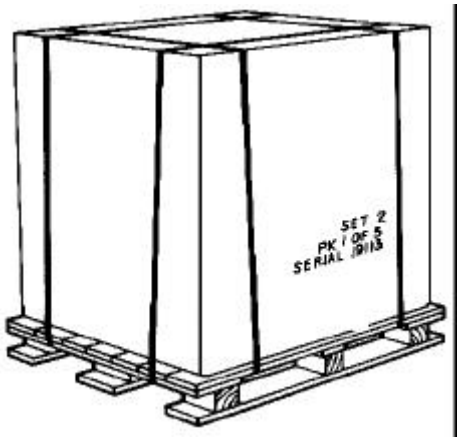

Figure 4-11. General-purpose pallet

Figure 4-12. Sled pallet

(4) A warehouse pallet is used to handle cargo in warehouses. It is much lighter than the stevedore pallet. The most common size of warehouse pallet is 48 by 48 inches, but a 40- by 48-inch size is also made. The warehouse pallet can be the open end type that is moved by a forklift or hoisted by a pallet bridle, or the closed end type that is moved by forklift only.

(5) When items of cargo are palletized, the tiers are laid so that one tier ties together with another to give stability to the unitized load and to keep the cargo from falling off the pallet while it is being moved. Cargo handlers can obtain greater use of the pallet area by building the load in a definite pattern whenever possible.

d. **Spreaders.** A spreader (Figure 4-13) is any device used to keep the side pressure of the sling legs away from the load being hoisted. Some commonly used spreaders include—

- Vehicle spreaders with wheel nets.
- Heavy-lift spreaders.
- Barrel sling spreaders.
- Pallet bridle spreaders.

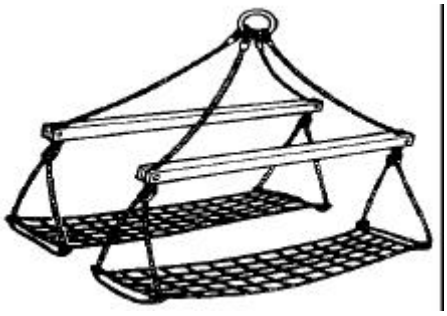

Downloaded from http://www.everyspec.com

Figure 4-13. Vehicle spreader with wheel nets

(1) A vehicle spreader is made of lengths of hardwood, pipe, or steel beams. It permits a straight pull on the sling and wheel nets. This keeps pressure away from the sides of the vehicle to be hoisted.

(a) Wheel nets are used for hoisting sedans and other light vehicles (refer to Figure 4-13). The wheel nets included in the cargo set vehicle are 8 by 3 feet, with 6-inch mesh. Manila rope that is 3 inches in circumference is used in the net with the exception of the frame which uses 3 3/4-inch manila rope.

(b) When using the sling and wheel net, the winch operator lowers the cargo hook until the wheel nets are on the ground. The nets are spread out in this position so there is enough clearance between the top of the cargo net and the bottom of the vehicle spreader to allow the vehicle to enter.

(c) The vehicle is pushed until its wheels are in the net. Cargo handlers may also use other types of slings to load vehicles. For example, a four-legged bridle can be used if the vehicle has been fitted with lifting eyes.

(2) Heavy-lift spreaders are made of steel beams because stronger material is required to keep greater pressure away from the side of the heavy lift (Figure 4-14).

(3) Barrel sling spreaders may be triangular, straight, or square (Figure 4-15). They are usually made of plate steel with holes for the shackles which hold the chime hooks. Cargo handlers may hoist a number of drums at one time with the use of the barrel sling spreader.

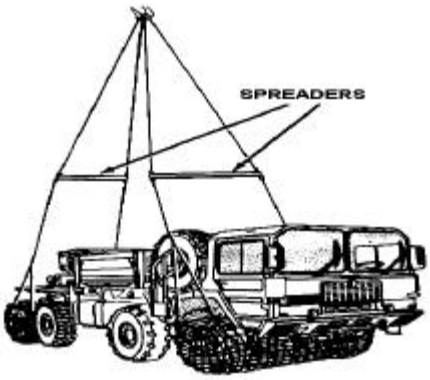

Figure 4-14. Heavy-lift spreader

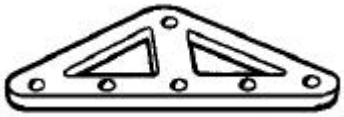

Figure 4-15. Barrel sling spreader

Downloaded from http://www.everyspec.com

(4) Pallet bridle spreaders keep pressure away from the sides of the draft (Figure 4-16). The straight types are made of steel or hardwood.

Figure 4-16. Pallet bridle spreaders

e. **Bridles.** Bridles are lifting devices designed to hoist special types of cargo. They may be used in conjunction with spreaders. A list of the most common types of bridles follows.

(1) Pallet bridles are used for quick, efficient handling of palletized cargo (Figure 4-17). Cargo handlers should insert the lifting bars at the bottom of the nets into the ends of the pallet to use the bridle. Then they should spread the sling nets around the cargo as far as they will reach and slip the eyes over the cargo hook. The bars at the top serve as spreaders.

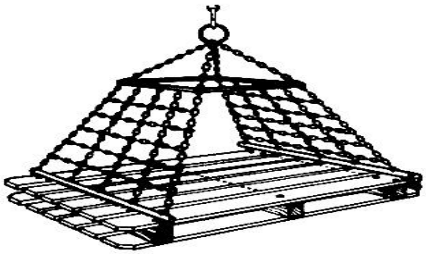

Figure 4-17. Pallet bridle

(2) Beam bridles are used to remove hatch beams from their sockets (Figure 4-18). Cargo handlers should place the hooks on opposite sides of the beam in the lightening holes or rings as provided. The beam will then ride level and straight up and down. Tag lines are attached to the bridles for control and safety.

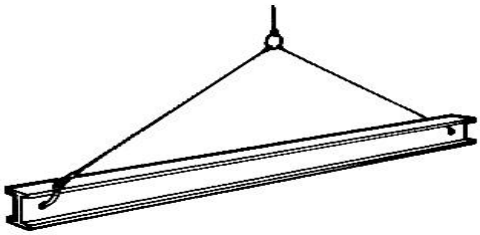

Figure 4-18. Beam bridle

(3) Vehicle bridles are used for efficient handling of various types of vehicles. The size of the bridle depends on the size of the vehicle to be hoisted. Cargo handlers should use vehicle spreaders with wheel nets for passenger vehicles. Heavy-lift spreaders are used for trucks.

(4) Heavy-duty bridles are used to reduce side pressure on heavy lifts. Bridles use a combination of wire rope, shackles, hooks, rings, or chain. Cargo handlers should know the safe working load of this type of gear when using these bridles. Table 4-1, page 4-8 gives the recommended minimum size of shackles, chain, hooks, and rings to be used with various sizes of wire rope.

Downloaded from http://www.everyspec.com

f. **Plate-Handling Clamps.** Plate-handling clamps are designed exclusively for handling steel plates. They are used to lift the plates into position to be properly slung with wire rope slings. They are safe for use only when the steel plate is not lifted to a great height. They are not used to hoist steel plates into or out of a hold. If the plates hit the coaming or the side of the hatch, it will release the tension and the clamps will drop the plates. The two most common types used in military cargo handling have serrated jaws and a 5-ton capacity (Figure 4-19).

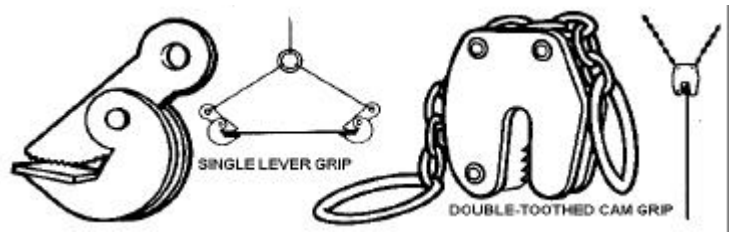

Figure 4-19. Plate-handling clamp grips

Table 4-1. Recommended minimum sizes of gear to be used with various sizes of wire rope

Improved plow-steel 6 x 19 wire rope (hemp center)		New wrought-iron chain (diameter of stock in inches)	Round-pin or screw-pin shackle (diameter of pin in inches)		Drop-forged steel hooks (diameter in inches)		Steel rings and links (diameter of stock in inches)		
Diameter (inches)	Safe load (pounds)		Screw pin	Round pin	Eye	Throat	Circle	Oblong	Triangle
1/2	4,300	1/2	3/4	5/8	1 1/4	1 3/8	1	9/16	3/4
1/16	5,400	9/16	3/4	3/4	1 3/8	1 1/2	1 1/4	5/8	7/8
5/8	6,600	5/8	7/8	3/4	1 1/2	1 3/4	1 1/4	3/4	7/8
3/4	9,400	3/4	1	7/8	1 3/4	2	1 1/2	1	1
7/8	12,800	7/8	1 1/8	1	2 3/8	2 1/2	1 3/4	1 1/8	1 1/4
1	16,000	1	1 1/4	1 1/8	2 3/4	3	2	1 1/4	1 1/2
1 1/8	21,200	1 1/8	1 1/2	1 3/8	3 1/8	3 3/8	2 1/4	1 3/8	1 3/4
1 1/4	26,000	1 1/4	1 5/8	1 1/2	3 1/2	4	2 1/4	1 1/2	1 3/4
1 3/8	31,400	1 3/8	1 3/4	1 5/8	3 1/2	4	2 1/2	1 3/4	
1 1/2	37,000	1 1/2	2	2	4	4 1/2	2 3/4	1 3/4	2 1/4

(1) The single lever grip clamp is used for lifting plates in a horizontal position. It has a tapered jaw opening, a toothed clamping arm, and an oval ring. It picks up the plate resting in a horizontal plane and keeps it horizontal while it is being lifted.

(2) The double-toothed cam grip clamp is chain operated with a sling link for lifting steel plates in a vertical position. It can lift only one plate at a time. It picks up the plate resting in a horizontal plane and turns the plate over until it hangs vertically.

4-4. CARGO-HANDLING AIDS. Cargo-handling aids are used to help handle cargo. These include items such as wedge point bars (pinchbars), rollers, and tag lines.

Downloaded from http://www.everyspec.com

a. **Wedge Point Bars.** Wedge point bars have a wedge-shaped working end for prying. They are used to shift heavy cases into position over short distances with a grease-like substance called skid compound. For longer distances, cargo handlers use the wedge point bar to pry the case up high enough to get rollers under it (Figure 4-20).

Figure 4-20. Use of wedge point bar and rollers

b. **Rollers.** Personnel use rollers to move cargo from the wings and ends of a hatch to the square of the hatch. There are several types of rollers usually available.

(1) Pallet-type truck dollies or pallet dollies consist of a steel frame and eight bar rollers. Cargo handlers may land pallets of cargo on truck dollies in the square of the hatch. The dollies are then pulled into the wings where the cargo is to be stowed. Cargo handlers can place empty pallets on the dollies in the wings. When loaded with cargo, the dollies are pulled into the square of the hatch to be placed in position for hoisting the cargo.

(2) Single rollers are round bars of wood, steel, or steel pipe. The rollers included in the general hatch cargo set are made of hardwood and are 3 3/4 inches in diameter and 4 feet long. Single rollers are used to move heavy cargo in a hold.

(3) Gravity conveyors are normally made in 10-foot sections. They may be either wheel or roller type. Cargo handlers may set up roller conveyors in the hold to move small boxes or other suitable items of cargo from the square of the hatch into or out of the wings.

c. **Tag Lines.** Tag lines are long lengths of light line made fast to long items of cargo and heavy lifts for the purpose of controlling the swing of the draft as it is being hoisted or lowered.

4-5. CARE OF CARGO-HANDLING GEAR. The following simple rules will help prolong the life of cargo-handling gear. Cargo handlers should—

- Apply a light coat of oil to the wire rope slings periodically. A lubricated sling will wear five times longer than a dry sling.
- Clean cargo-handling gear regularly.
- Ensure manila rope slings are dry before storing to prevent mildew.
- Keep gear not in use in the gearbox or locker to prevent damage.
- Know the safe working load of all gear (TM 5-725).
- Not exceed the safe working load of any part of the rigging or of the cargo-handling gear at any time.
- Never overload a sling and never apply loads suddenly.

Downloaded from http://www.everyspec.com

CHAPTER 5

MATERIALS-HANDLING EQUIPMENT

5-1. INTRODUCTION. MHE is large, mechanically powered equipment used to lift, transfer, and stack cargo. Proper use of MHE makes moving cargo through the terminal more efficient. The information in this chapter will give you a background on the different types of MHE.

5-2. FORKLIFT TRUCKS. Forklifts used in military break-bulk cargo operations range in capacity from 4,000 to 15,000 pounds. They have lift heights ranging from 144 to 210 inches. They are gasoline-, diesel-, or electric-powered vehicles. These lifts are operated on paved surfaces or rough terrain, depending on job requirements. Gas and electric forklifts are useful aboard vessels to handle itemized cargo. The three types of forklifts you will most likely encounter are gas-powered commercial forklifts, electric forklifts, and diesel-powered rough-terrain forklifts.

a. **Types.** The different types of forklifts are listed below.

(1) Commercial forklifts handle cargo on the pier, in the warehouse, and in the hold of a ship.

(2) Electric forklifts handle military explosives in the hold of a ship (Figure 5-1).

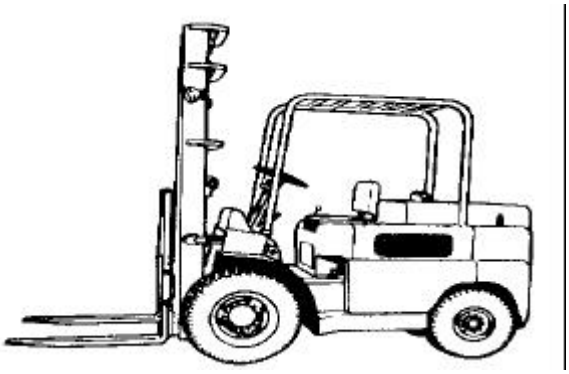

Figure 5-1. Electric forklift

(3) Rough-terrain forklifts (Figures 5-2, 5-3, and 5-4, pages 5-2 and 5-3) move cargo off the road and over unimproved or soft surfaces, such as deep sand, mud, and snow. They have four-wheel power steering with independent controls for front and rear wheels. The steering operates all wheels in the conventional manner. Operators use a lever to select two-wheel steering, four-wheel crab steering, or four-wheel cramp steering. A rough-terrain forklift has a ground clearance of 14 inches and can climb slopes up to 45 degrees. The forks are power-operated. They tilt forward or backward to angles up to 45 degrees and to either side at angles up to 10 degrees from the horizontal. Operators may extend the loaded forks from the upright position a minimum of 21 inches above ground level.

Downloaded from http://www.everyspec.com

(a) The 4,000 pound rough terrain forklift (Figure 5-2) is designed for use in close quarters for storage and shipping operations. In the air terminal area, it is used primarily for loading and unloading pallets and secondary cargo on vehicles. With the tines (forks) removed and addition of a front-mounted pintle hook, the 4,000 pound forklift makes an excellent pusher vehicle. It is capable of lifting and transporting loads up to 4,000 pounds. The tires will raise or lower and tilt forward or aft. Some models can even shift the load right or left. The only disadvantages of the 4,000 pound forklift are the limited weight lifting capability, short tines, and it cannot handle palletized 463L cargo.

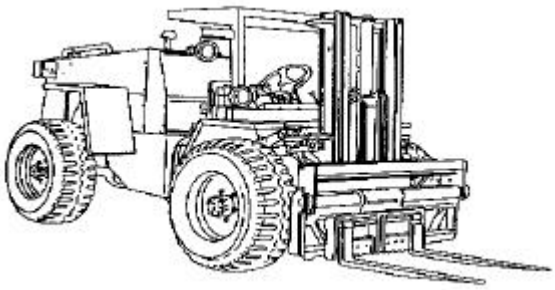

Figure 5-2. Rough-terrain forklift, 4,000-pound

(b) The 6,000-pound rough-terrain forklift (Figure 5-3) is mounted on low-pressure, high-flotation pneumatic tires. All four wheels drive and steer. One hydraulic system powers the steering mechanism and another system raises and lowers the lift. Special lifting arms are arranged so that the load can be raised or lowered in either a level or a pretilted position. For operations in landing craft, the forks are raised or lowered and tilted forward or backward more than those of conventional forklift trucks. When carrying a load, the driver normally has a clear view over the cargo. If he does not, he must move the vehicle in reverse, looking to the rear over his shoulder as he does when he operates a conventional model with a load that obstructs his view.

Figure 5-3. Rough-terrain forklift, 6,000-pound

(c) Rough-terrain forklifts are used in beach operations and operated over nearly all types of terrain. They can also be used on the pier to handle large cases or a CONEX. A rough-terrain forklift is good for transferring cargo from and to landing craft at the shoreline and for moving cargo in open storage areas. It can operate in water to a maximum of 36 inches without using waterproofing kits, and to a maximum of 60 inches with kits installed.

(d) The 10,000-pound rough-terrain forklift (Figure 5-4) is built like the 6,000-pound forklift except that it is a larger vehicle. The primary difference between the two is

Downloaded from http://www.everyspec.com

that the 10,000-pound forklift is designed for operating in unimproved terrain. It has a lifting capacity of 10,000 pounds when the center of gravity of the load is within 24 inches of the mast.

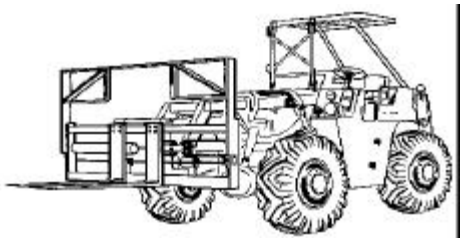

Figure 5-4. Rough-terrain forklift, 10,000-pound

b. **Safety.** Operators should observe the following safety precautions:

- Carry all loads tilted back slightly and just above the running surface.
- If the load blocks your view, drive the forklift in reverse.
- Never travel with a load tilted forward and never raise, lower, or tilt a load while the forklift is in motion.
- Always face the direction that you travel. This means looking over your shoulder if you must drive in reverse.
- Always back down ramps instead of going forward with the load in front of you.
- Never operate a forklift at a speed greater than five miles per hour.
- Always come to a full stop before changing directions. Avoid sudden stops.
- Do not allow passengers to ride on the forklift.
- Always use ground guides.

5-3. TRACTORS, TRAILERS, AND HAND TRUCKS. Tractors, trailers, and hand trucks are sometimes used to move cargo at terminals.

a. **Tractors.** A warehouse tractor is a short, compact vehicle with a short turning radius. It is usually equipped with a sheet-steel bumper for pushing other equipment. Further, it has a towing hitch in the rear for towing a train of warehouse trailers and other equipment (Figure 5-5).

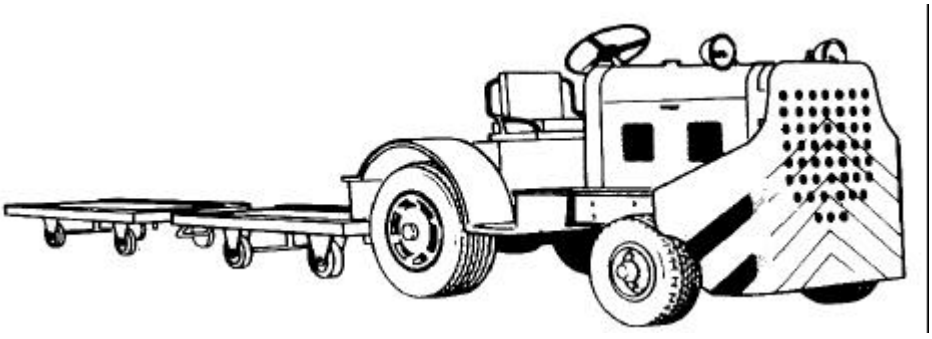

Figure 5-5. Warehouse tractor and trailers

Downloaded from http://www.everyspec.com

b. **Trailers.** A warehouse trailer is a wheeled vehicle for transporting cargo over smooth surfaces. It is generally pulled by a tractor, but can be pushed as a four-wheeled hand truck.

c. **Hand Trucks.** Hand trucks are used for moving packages too heavy to be moved by hand (Figure 5-6). They are also used for increasing the unit load of small packages on occasional short trips.

(1) Some hand trucks have folding wings and curved braces between the legs so they can carry drums and barrels, as well as other types of packages. The wheels have solid or pneumatic rubber tires. The load capacity of the hand truck is 600 pounds and 95 cubic feet.

Figure 5-6. Hand truck

(2) An improvised extension on the blade or nose at the bottom of the truck will increase its cubic carrying capacity. The nose or blade is used to pry drums, barrels, and heavy boxes. These objects must be tipped back to rest against the truck's bed. When the truck is properly loaded, the wheels bear the weight, relieving the operator of strain. Operators will find that good loading is a matter of trial and error with the particular cargo to be moved. You should always assign two men to the task, with the truck normally in an upright position. When it is ready to move, the operator puts one foot on the bottom crosspiece to keep the handle toward him. He may be able to unload by himself, depending on the cargo.

5-4. PALLET JACKS. The pallet jack is a low-level hydraulic lift suitable for the horizontal movement of certain types of pallets (Figure 5-7). One person can operate this jack. Additionally, the jack is low enough to be passed through the opening in the bottom of a pallet. However, when the pallet is raised, the rear wheels must have clearance to reach the floor or deck. The general-purpose, four-way-entry pallet is designed so that it can be moved with a pallet jack. The pallet jack is not suitable for moving stevedore pallets.

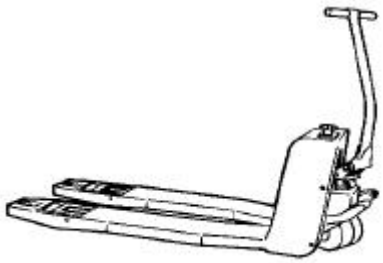

Figure 5-7. Pallet jack

a. Although pallet jacks are not an authorized TOE item, they may sometimes be justified, obtained, and used to move palletized cargo into final stowage position underdeck. Since pallet jacks cannot be used to tier cargo, it is necessary to stow one tier at a time. Personnel should lay dunnage between tiers so that the pallet jack can be maneuvered.

b. Operators pump the jack up by its handles. In pumping, the tines or forks are raised up on hinged rollers. They, with the wheels in front, support the jack as it is moved. There is a valve on top of the jack near the handle. Operators turn the valve to the right when raising the jack and to the left when lowering it. The projections bracketing the front wheels are brake pedals.

Downloaded from http://www.everyspec.com

5-5. CRANES. Cranes use a projecting swinging arm to lift, swing, and lower loads which cannot be reached by other equipment or are too bulky or too heavy to be moved otherwise. Since their chief advantage is their reach, they should never be used to carry a load from one place to another except for short distances. The four types of cranes discussed here are rough-terrain cranes, floating cranes, gantry cranes, and truck-mounted cranes.

a. **Types of Cranes.** There are four types of cranes. Each is listed below.

(1) Rough-terrain cranes are wheel-mounted, diesel-driven cranes designed for operating in rough terrain. One rough-terrain crane, with a 20-ton capacity and a 30-foot boom, is equipped with an earth moving blade for improving beach working area or making its own path in unimproved terrain (Figure 5-8). A RTCC has an all welded steel frame and four-wheel drive. The rear-mounted engine has a six-speed (forward and reverse) transmission. Hydraulic, double box, sliding beam outriggers are integral with the carrier frame (Figure 5-9).

Figure 5-8. Rough-terrain crane, 20-ton

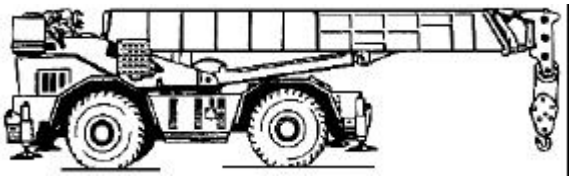

Figure 5-9. Rough-terrain container crane

(2) Floating cranes are mounted on barges. They vary in lifting capacity. Some commercial cranes have capacities up to 240 long tons. The two standard floating cranes found in the military inventory have capacities of 60 and 89 long tons (Figure 5-10). Their auxiliary hoist can lift 15 long tons at a radius of 122 feet, 6inches. The barge has an overall length of 140 feet and a beam of 70 feet. Floating cranes work the offshore side of a vessel. Cargo handlers discharge heavy lifts to the deck of the cranes or to the barge tied alongside. Both cranes may reach cross the ship and discharge the lift, either on the pier or to clearance carrier equipment.

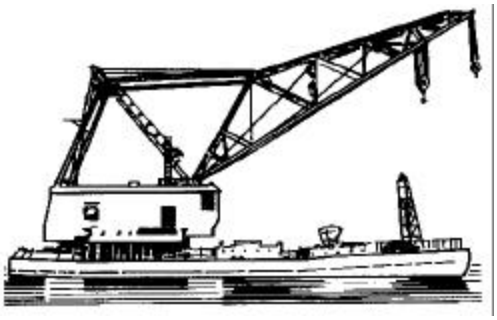

Figure 5-10. Floating crane

Downloaded from http://www.everyspec.com

(3) Gantry cranes range in capacity from 3 to 45 tons. The legs of the cranes are supported on wheels that run on tracks on the pier apron. Operators use gantry cranes for loading and discharging barges, railcars, and trucks; for handling heavy lifts aboard vessels; and for handling general cargo in place of the ship's gear (Figure 5-11).

(4) A truck-mounted crane is a commercially designed vehicle with a hydraulically operated boom assembly mounted on a carrier chassis. It has tandem axles, front and rear, dual rear tires, and a 224-inch wheelbase. Truck-mounted cranes vary in lifting capacity. Some commercial cranes have capacities up to 240 long tons. The two types of truck-mounted cranes found in the military inventory are the 140- and 300-ton cranes.

(a) The truck-mounted crane, 140-ton is designed to lift, handle, and place loads of up to 140 tons. The truck carrier uses 8 x 4 drive. All control and instruments necessary to drive the carrier are inside the cab. A Detroit Diesel 6V92TC series engine powers the carrier. A Detroit Diesel 6-71 series engine powers the upper machinery. All controls and instruments necessary to operate the upper machinery are located in the operator's cab. The upper machinery has a tubular boom and a lower and upper boom assembly section with hook block (Figure 5-12).

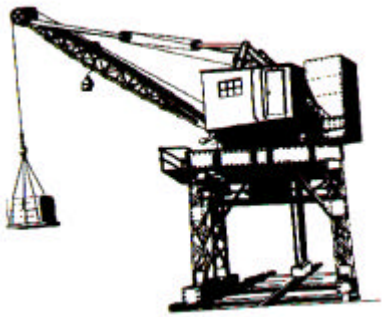

Figure 5-11. Gantry crane

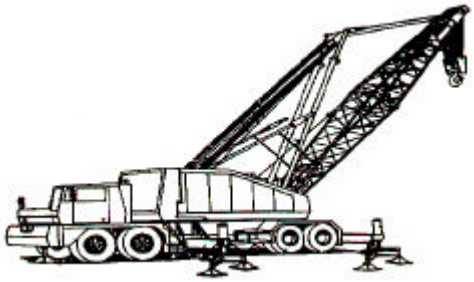

Figure 5-12. Truck-mounted crane, 140-ton

(b) The truck-mounted crane, 300-ton, is designed to lift, handle, and place loads of up to 240 tons. All controls and instruments necessary to drive the carrier are inside the cab. All controls and instruments necessary to operate the upper machinery are inside operator's cab. The upper machinery has a tubular boom and a lower and upper boom assembly section with hook block that extends up to 130 feet (Figure 5-13). The 300-ton crane can work offshore on barges or improved beach areas.

Downloaded from http://www.everyspec.com

Figure 5-13. Truck-mounted crane, 300-ton

b. **Instructions for Safe Crane Operations.** Operators must understand a crane's lifting capacity in order to use one safely and efficiently. While operators cannot increase capacity beyond the limit set by the manufacturer, they must take into account changes in capacity. These changes are caused by changes in the length or angle of the boom and in the resulting boom radius. Boom angles are measured in degrees, starting at zero, with the boom parallel to the ground. Boom radius is the horizontal distance between the center of rotation (the center of the turntable or the center pin) and vertical line through the center of the hook. Signals for crane operations are shown in Chapter 3. Operators should take the following safety precautions when using cranes:

- Always check the crane and all slings, cables, chains, and hooks before starting an operation to avoid possible damage to the machine or injury to personnel.
- Keep the crane level once motion is started.
- Never swing a crane rapidly because centrifugal force can get the mechanism out of control or even upset the crane.
- Use standard signals and ground guides for all operations.
- Keep the boom at least 10 feet away from power lines.
- Do not lift weights greater than the rated capacity of the crane for the boom radius you must use.
- Put all controls in neutral before servicing a crane or making repairs or adjustments, including troubleshooting.

5-6. HELICOPTER POSITIONING DOLLY. The helicopter-positioning dolly moves skid- or wheel-mounted helicopters, (UH-1, AH-1, and UH-60A) laterally or sideways to their designated stowage positions aboard ship. They are especially useful aboard RO/RO ships. These dollies make a tight stow possible when loading helicopters.

a. The helicopter-positioning dolly (Figure 5-14) is made up of two 4-ton capacity hydraulic service jacks (same type used in most garages). They are positioned side by side and spaced 35 inches apart. A 4-inch I-beam, approximately 5 feet long, is welded across the lifting pads of the two jacks. A 4-inch wide strip of steel plate is welded, full length, to both sides of the I-beam to form a box beam with a vertical partition down the middle. The two cavities receive and hold a snug-fitting, tempered steel bar, machined to fit. The bars slide in and out of the beam, one to the left and one to the right. This extends the width or "reach" of the beam to conform to the width (distance between) of the skids or wheels of the helicopter. A triangular piece of steel plate, shaped like a coat hanger, is secured to the ends of the sliding at right angles and secured in place.

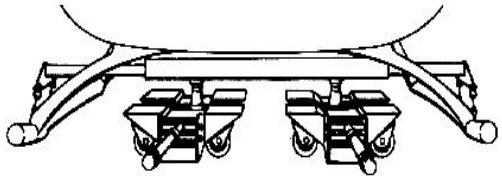

Figure 5-14. Helicopter positioning dolly

Downloaded from http://www.everyspec.com

CAUTION: Take care to prevent or restrain the free rolling movement of helicopters on inclined decks. Failure to do this could result in damage to helicopters.

(1) ***Assembling the helicopter-positioning dolly.*** There are four of these dollies stored aboard each of the FSS vessels. When not in use they are taken apart, boxed, and stored with the rest of the ship's cargo-handling gear. To reassemble and make them operational—

- Remove the entire dolly assembly from the box.
- Cut the metal banding and remove the dust covers (refer to Figure 5-14).
- Insert the sliding bars in the box beam housing (both sides).
- Use a 7/16-inch box-end wrench to remove the hinge pin bolts.
- Pull out right and left hinge pins.
- Rotate and fit the right yoke into the segment and jack frame while holding the release knot. Make sure the cam is on the right side of the release disk.
- Push the hinge pins into the yoke.
- Tighten the hinge pin bolts.
- Secure the opposite handle using the same steps.
- Install the dust covers after both handles are secured.

(2) ***Moving skid-mounted helicopters.*** With the sliding bars fully retracted, the dolly is centered under the tail of the helicopter, then it is rolled forward and maneuvered past any items sticking out from the belly of the helicopter (drain tubes, bayonet antennas, and so forth) and past the new landing gear cross tub. When the shackles in the triangular end plates are a beam of the lifting lugs on the skid mounts, the jacks are raised up and the sliding bars are extended to just above the existing lifting lugs in the top of each skid tube and the shackles are attached (see Figure 5-15). With one person at each jack handle, the helicopter can now be lifted. Lift the helicopter until the skids are 1 to 2 inches off the deck.

NOTE: Although the helicopter can be lifted to more than 12 inches off the deck, it is foolhardy to lift the helicopter any higher than necessary to clear obstacles on the deck, such as seams on tie-down fitting.

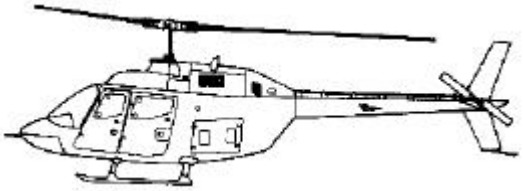

Figure 5-15. Skid-mounted helicopter

(3) ***Moving wheel-mounted helicopters.*** When using the dolly to move a wheel-mounted helicopter such as the UH-60A, the dolly is rolled under the helicopter, then the lift is made by aligning the jack point mating holes in the blocks welded to the triangular and plates on the sliding bars (see Figure 5-

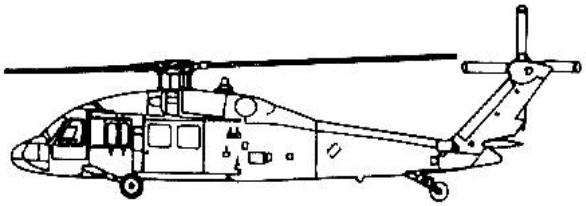

Downloaded from http://www.everyspec.com

16). Then you lift the helicopter up until the wheels clear the deck 1 to 2 inches.

Figure 5-16. Wheel-mounted helicopter (UH-60A)

b. Depending on the weight and size of the helicopter, four to eight cargo handlers may be required to move a helicopter in any given direction by pushing against the dolly on the landing gear or on the strong points of the helicopter. Occasionally, more persons may be required to change the direction of roll or to overcome some obstacle on the deck of the vessel. The tail wheel of the helicopter is turned in the direction of movement with its standard steering tow bar.

5-7. CONTAINER HANDLERS. The RTCH (Figure 5-17) is used for loading, unloading, handling, and stacking containers weighing 50,000 pounds (22,700 kg) or less. It operates over rough terrain including beaches, snow, mud, and cross-country. The RTCH fords up to 60 inches (152 cm) of salt water and makes over the shore landings. The RTCH comes with a 20-, 35-, and 40-foot top handler. It also comes with forks. It may be used to load and unload flatbed trailers and railcars.

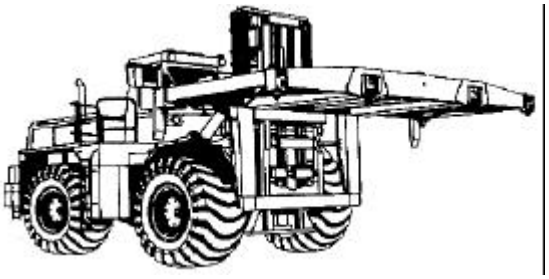

Figure 5-17. Rough-terrain container handler

Downloaded from http://www.everyspec.com

CHAPTER 6

BLOCK AND TACKLE, WIRE ROPE, AND MARLINESPIKE SEAMANSHIP

Section I. Blocks and Tackles

6-1. INTRODUCTION. Section I of this chapter discusses blocks which are among the most important fittings used aboard ship on the deck, in the engine department, and in other operations. Section II covers elements of wire rope rigging which cargo handlers in a terminal service company must know. It details the care and use of wire rope, procedures for computing the safe working load and breaking strength, and inspection and handling. Section III covers marlinespike seamanship, which is a general term for handling and caring for fiber line and wire rope used aboard ship or in other marine operations.

6-2. COMPONENTS OF WOODEN BLOCKS. A wooden block, as shown in Figure 6-1, consists of one or more sheaves (pulleys). Each block has one or more steel straps which strengthen the block and support the sheave pin. Personnel may suspend the block or apply a load by means of a hook or shackle inserted in the top of the strap. The strap may continue through the block and form a projection, called the becket, to attach another line. The becket usually has a thimble to prevent chafing of the line. The front of the block is called its face and the sides of the shell are called cheeks. The opening between the top of the sheave and the block where the line is passed through the block is called the swallow. The breech is the opening between the bottom of the sheave and the block and serves no definite purpose. Line is never passed through the breech of a block except for a small tail line used to keep the block from bouncing on the deck. The entire wooden portion of a block is called the shell; it protects the sheave and line.

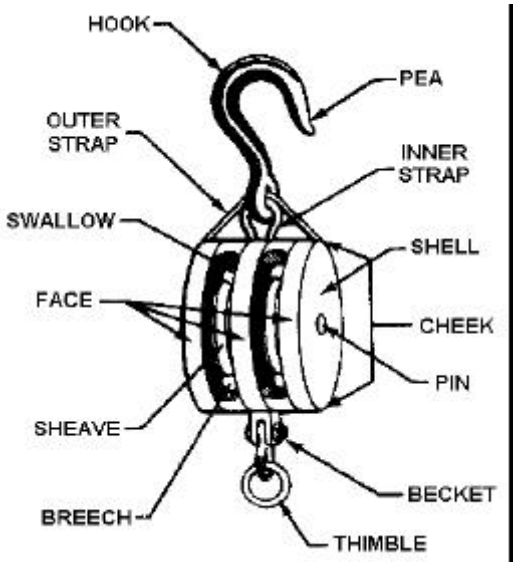

Figure 6-1. Components of wooden blocks

6-3. COMPONENTS OF METAL BLOCKS. Metal blocks have basically the same part as wooden blocks. The metal block has bolts to hold its cheeks together and a metal shell. The parts of a metal block are shown in Figure 6-2, page 6-2. This figure shows the diamond and roller bearing block.

Downloaded from http://www.everyspec.com

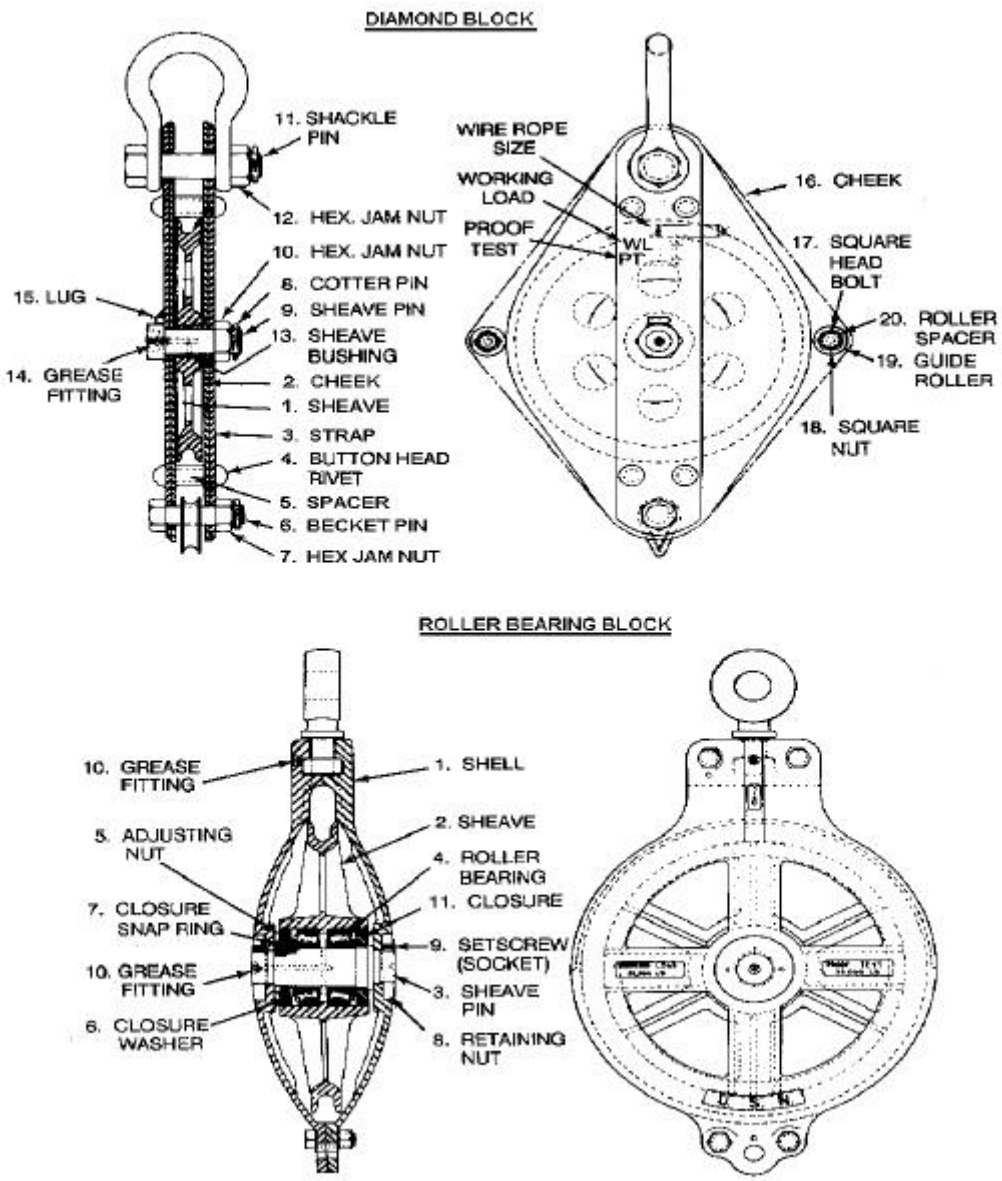

Figure 6-2. Components of metal blocks

6-4. TYPES OF BLOCKS. There are several different types of blocks, each with a particular use. Wooden and metal blocks are of the same design except for the head or heel block which is only metal. These blocks are explained below and illustrated in Figure 6-3.

- The single-sheave block has only one sheave and may or may not have a hook or becket.
- The multiple-sheave block contains two or more sheaves. It also may or may not have a hook or becket.
- A fixed-hook block is a single- or multiple-sheave block with a stationary hook attached to the top of the strap.

Downloaded from http://www.everyspec.com

- A swivel-hook block is a single- or multiple-sheave block with a swivel hook that allows the lock to move in the direction of the load.
- The snatch block has a hinged cheek on one side and differs from all the other blocks. The advantage of a snatch block over the other types is that it can be opened and a bight of line placed over the sheave without passing the end of the line through the swallow. The snatch block also has a swivel hook. The primary function of the snatch block is to change the direction of the load or pull.
- The head or heel block has a cast metal shell, roller bearings, and a grease fitting in the sheave pin. The cargo runner can pass over these blocks at the head and heel of the cargo boom. These high-speed blocks must be lubricated every time they are used. A good winch operator can pass the cargo runner over the sheaves of these blocks at a rate of 500 feet per minute.

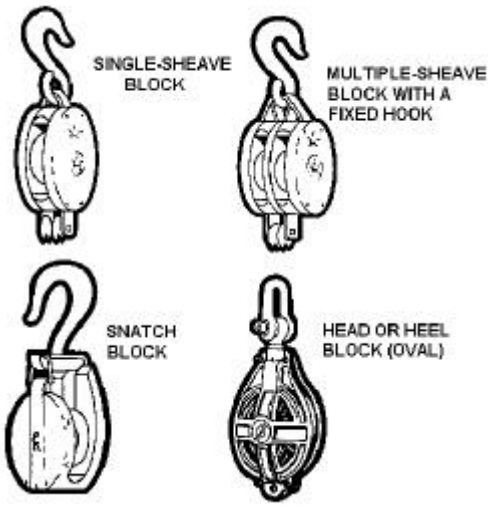

Figure 6-3. Types of blocks

a. Blocks are named according to the purpose for which they are used, the places they occupy, or from a particular shape or type of construction. According to the number of sheaves, blocks are designated as single, double, or triple. A traveling block is attached to the load being lifted and moves as lifting occurs. A standing block is fixed to a stationary object.

b. Every tackle system contains a fixed block attached to some solid support and may have a traveling block attached to the load (see Figure 6-4). The single rope leaving the tackle system is called the fall line. Personnel apply the pulling force to the fall line which may be led through a leading block.

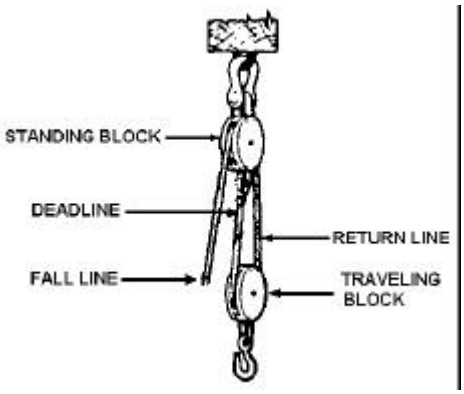

Figure 6-4. Double block and a tackle system

6-5. SIZES OF BLOCKS. Users can determine the size of blocks by measuring the length of the cheek in inches. Blocks are designated for use with a specific line size. Bending line over a sheave that is too small causes distortion and strain, resulting in the line wearing on the shell.

Downloaded from http://www.everyspec.com

Personnel can use line smaller than that designated for a sheave with no damage, but should never use line of a larger size.

a. To determine the size wooden block to use with line of a known size, personnel may follow these formulas:

3 x circumference of line = shell size
2 x circumference of line = sheave size

b. The size metal block to use with wire rope depends on the diameter of the sheave. The sheave is never less than 20 times the diameter of the wire. For example, personnel can determine the size block to use with 3/4-inch wire rope as follows:

$$3/4 \text{ inch} \times \frac{20}{1} = \frac{60}{4} = 15\text{-inch block}$$

6-6. MAINTENANCE OF METAL BLOCKS. Personnel must frequently disassemble metal blocks in cargo-handling rigs and other blocks that are in continuous use and inspect them for wear. Blocks used only occasionally seldom need to be disassembled if they are kept well lubricated.

a. To remove the sheave from a diamond or oval block, personnel take out the cotter pin, remove the hexagonal nut from the sheave pin, and drive out the sheave pin. For a diamond block, personnel must loosen all bolts holding the cheeks together and remove one before the sheave will slide out. With an oval block, it is necessary only to loosen the bolts.

b. To disassemble a roller bearing block, personnel loosen the set screws and remove the retaining nuts. Next, they take out the bolt holding the shell together and remove the shell, closure snap rings, adjusting nut, closure washer, and closure. The sheave pin and the bearings from the sheave are removed last.

6-7. TACKLE USES AND TYPES. A block with a line led over the sheave makes applying power by changing the direction of the pull easier. Used with line and another block, it becomes a tackle and increases the power applied on the hauling part. Tackles are designated according to their uses and the number of sheaves in the blocks that are used to make the tackle. The various types of tackle are rove with different size blocks and all have a limited lifting capacity depending on the number of sheaves, the size blocks and the size line used. The tackles are named for their use or from their makeup. The most commonly used tackles are explained below and illustrated in Figure 6-5.

- A single whip tackle consists of a single fixed block with a line passed over its sheave. This tackle has no mechanical advantage.
- The gun tackle, named for its use on old sailing ships to haul the cannons back to their gun port after firing, consists of one single-sheave fixed block and one single-sheave movable block.
- The luff tackle is made up of one double-sheaved block and one single-sheaved block.
- The twofold purchase is made up of two double-sheaved blocks.
- The double luff tackle is made up of one double-sheaved block and one triple-sheaved block.
- The threefold purchase is made up of two three-sheaved blocks.

Downloaded from http://www.everyspec.com

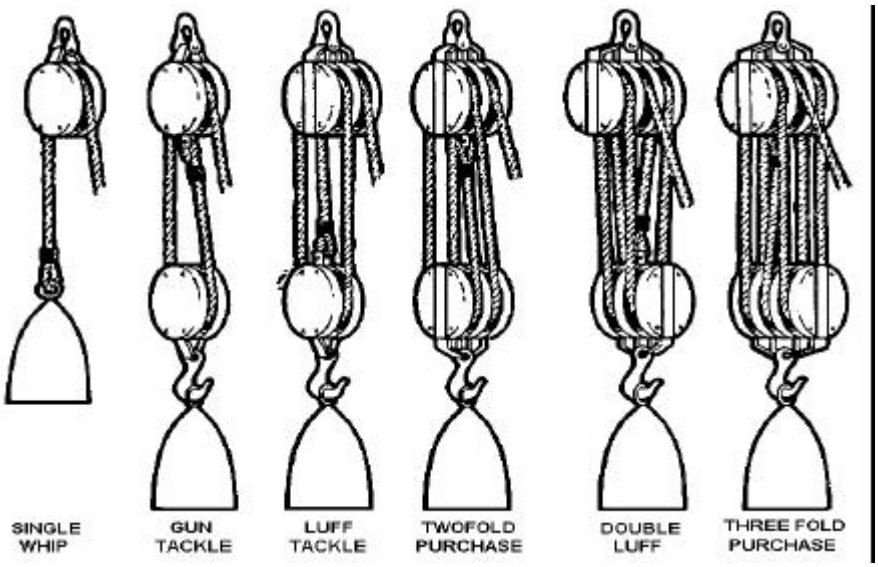

Figure 6-5. Types of tackles

6-8. REEVING TACKLES. Personnel reeving tackles reeve each type differently. If a tackle is rove improperly, too much friction and possible binding of the falls can result when lifting or lowering a load, creating a safety hazard. It is important to use the proper method of reeving each type of tackle up to and including a threefold purchase.

a. In reeving triple blocks (see Figure 6-6), personnel should put hoisting strain at the center of the blocks to prevent them from inclining under the train. If the blocks do incline, the rope will drag across the edges of the sheaves and the shell of the block and cut the fibers.

b. The reeving of each type of tackle is explained in subparagraphs (1) through (5) and illustrated in Figure 6-6, with the exception of single whip and runner tackles. Single whip tackle offers no mechanical advantage and runner tackle has a 2 to 1 mechanical advantage.

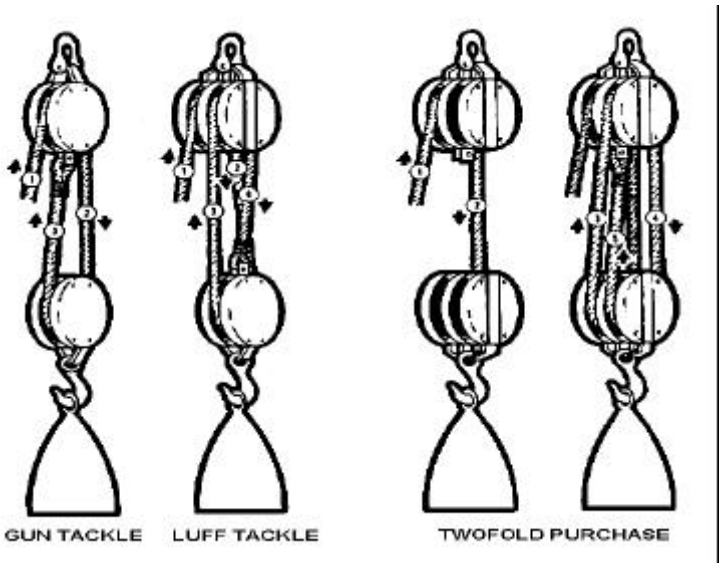

Figure 6-6. Reeving tackles

Downloaded from http://www.everyspec.com

(1) ***Gun tackle.*** Place two single-sheave blocks about 3 feet apart with the hooks or straps facing outboard and both blocks in the same position, either on their face or cheek. Next, they should run the line through the first and second block, then splice it to the becket of the first block. Gun tackle has a 2 to 1 mechanical advantage.

(2) ***Luff tackle.*** Position one single- and one double-sheave block in the same manner as with the gun tackle. Run the line through one of the sheaves of the double-sheave block first and then to the sheave of the single-sheave block. Next, run the line through the other sheave of the double-sheave block and splice the line to the becket of the single-sheave block. This tackle offers a 3 to 1 mechanical advantage.

(3) ***Twofold purchase.*** Position two double-sheave blocks in the same manner as with the luff tackle. Reeve the line through the top or bottom block, stay in sequence, and never cross from one side to the other. After reeving the tackle, splice the standing line to the becket. Twofold tackle has a 4 to 1 mechanical advantage.

(4) ***Double luff tackle.*** Obtain a double- and a triple-sheave block. Place the blocks 3 feet apart with the hooks or straps facing outboard and position the blocks so that one is face down and the other cheek down. When reeving a tackle that has one block with more sheaves than the other, always start with the block with the most sheaves. In this instance, start reeving through the center sheave, keeping the line parallel. Never cross from one side to the other. Double luff tackle has a 5 to 1 mechanical advantage.

(5) ***Threefold purchase.*** Place two triple-sheave blocks 3 feet apart, with the hooks or straps facing outboard, positioning the blocks so one is face down and the other is cheek down. Start reeving in the center sheave of one block and finish in the center sheave on the other. Then splice the standing part to the becket. This tackle offers a 6 to 1 mechanical advantage.

6-9. MECHANICAL ADVANTAGE. The mechanical advantage of a tackle refers to the relationship between the load being lifted and the power required to lift it. In other words, if a load of 10 pounds requires 10 pounds to lift it, the mechanical advantage is one. If a load of 50 pounds requires only 10 pounds of power to lift it, the mechanical advantage is 6 to 1 or 5 units of weight lifted for each unit of power applied.

a. The mechanical advantage of a tackle is determined by counting the number of parts of the falls at the movable block. The gun tackle in Figure 6-6 has a mechanical advantage of two. This tackle is rove to a disadvantage as are most vertical lifts. For a horizontal pull, the block with the cargo hook attached should be connected to the load, making it the movable block. This tackle would then be rove to an advantage which would be increased by one. Since most lifts in this test are vertical, the tackle is rove to a disadvantage unless otherwise stated.

b. To ascertain the amount of power required to lift a given load by means of a tackle, cargo handlers should determine the weight of the load to be lifted and divide this figure by the mechanical advantage. For example, lifting a 600-pound load by a single luff tackle, cargo handlers first determine the mechanical advantage gained with this type of tackle by counting the parts of the falls at the movable block. By dividing the weight to be lifted by the mechanical advantage it is possible to determine the pounds of power required to lift a certain amount of weight.

Downloaded from http://www.everyspec.com

6-10. FRICTION. A certain amount of the force applied to a tackle is lost through friction. Friction occurs in a tackle when lines rub against each other or against the frame or shell of the block, and pass over the sheaves. This loss in efficiency of the block and tackle (roughly 10 percent of the load per sheave) must be added to the weight being lifted to determine the total weight. For example, to determine the total weight of a load when lifting a load of 500 pounds with a twofold purchase, personnel use the following formula and compute:

TW = W x (1 + Friction) or (1 + F)
TW = Wx (1 + F)
TW = 500 x (1 + .4)
TW = 500 x 1.4
TW = 700 pounds

6-11. BREAKING STRESS AND SAFE WORKING LOAD. The following paragraphs explain the procedures used to determine breaking stress and safe working loads for blocks and tackle loads. The symbols used in the formula for computations are as follows:

W = Weight
TW = Total weight
SHP = Strain on hauling part
BS = Breaking stress
SWL = Safe working load
MA = Mechanical advantage
SF = Safety factor

a. The formulas for computing BS and SWL are as follows:

TW = W x (1 +F)
SHP = TW - MA
BS = SHP x SF

EXAMPLE 1: SHP = TW ÷ MA

Step 1. Determine the friction. See paragraph 6-10
Step 2. Determine the total weight. See paragraph 6-10.
Step 3. Determine the SHP.
Step 4. Compare the SHP to Table 6-1, page 6-8. Select an SWL that exceeds the computed SHP for the block and tackle.

EXAMPLE 2: BS = SF x SHP

Step 1. Determine the friction for the block and tackle.
Step 2. Determine the total weight to be lifted.
Step 3. Determine the SHP of the block and tackle.
Step 4. Apply the BS formula to compute the BS of the block and tackle.
Step 5. Compare the BS to the figures shown in Table 6-1. It is desirable that the SWL of the line used be greater than the computed BS for the block and tackle.

Downloaded from http://www.everyspec.com

NOTE: The safety factor for the hauling part is always 5. Tackle that involves the lifting or lowering of humans uses a safety factor of 8.

Table 6-1. Line strength table

LINE STRENTH TABLE (New line safety factor of 5)				
SIZE IN INCHES	MANILA*		SISAL*	
	SWL	BS	SWL	BS
1	200	1,000	160	800
1 1/2	450	2,250	360	1,800
2	800	4,000	640	3,200
2 1/2	1,250	6,250	1,100	5,500
3	1,800	9,000	1,440	7,200
3 1/2	2,450	12,250	1,960	9,800

* This table is computed in pounds for new line. For line that has been used these figures will decrease. Old line may have only 60 percent of the strength shown in pounds for a given size of line.

b. To determine the SWL for a line of known size to be rove into a tackle, personnel should use one of the following formulas as appropriate, where "C" denotes circumference and "D" denotes diameter. The formulas for manila and nylon will give the SWL in pounds. The formulas for wire rope will be in tons.

Manila line:	$SWL = C^2 \times 200$
Three strand nylon line:	$SWL = C^2 \times 500$
2-in-1 braided nylon line:	$SWL = C^2 \times 600$
Extra improved plow steel wire rope:	$SWL = D^2 \times 10$
Improved plow steel wire rope:	$SWL = D^2 \times 8$
Plow steel wire rope:	$SWL = D^2 \times 7$
Mild steel wire rope:	$SWL = D^2 \times 6$

c. If personnel are unsure which type of wire rope they are using, they must always use the formula for mild steel when figuring the SWL. This will ensure ultimate safety since the different strengths of wire rope cannot be identified visually.

Section II. Wire Rope

6-12. CARE AND USE OF WIRE ROPE. Wire rope is made of steel except for its core which is likely to be fiber. The grades of wire rope in descending order of strength are: Extra improved plow, improved plow, plow, and mild plow steel. Of these four grades, the Army uses improved plow steel extensively and plow steel to a lesser extent. The manufacturer stamps the grade on the reel. Because the grade of wire rope is not visually apparent, it should always be considered as plow steel when in doubt.

Downloaded from http://www.everyspec.com

6-13. MAKEUP OF WIRE ROPE. The basic unit of wire rope is the individual wire. Wires are laid together to form strands. The number of wires in a strand varies according to the purpose for which the rope is intended. Strands are laid around a core to form the wire rope itself. With preformed plow steel wire rope, the core may be hemp or polypropylene, a synthetic fiber. The core is a foundation to keep the wire rope round, to act as a shock absorber when the wire rope contracts under strain, and to serve as a reservoir for lubricant. Figure 6-7 shows a cross section of wire rope.

6-14. CLASSIFICATION. Wire rope is classified by the number of strands, number of wires per strand, strand construction, and type of lay.

a. **Strands and Wires.** Standard wire rope has six strands. The present commercial classifications group wire ropes according to weight, flexibility, and strength. The 6 x 19 classification has 6 strands and 19 wires per strand. The 6 x 37 classification has 6 strands and 37 wires in each strand (see Figure 6-7). Rope of numerous small wires is more flexible, but less resistant to external abrasion. Wire rope of a smaller number of larger wires is less flexible but more resistant to abrasion. Two ropes of the same size have the same strength even though, for example, one is 6 x 19 and the other is 6 x 37.

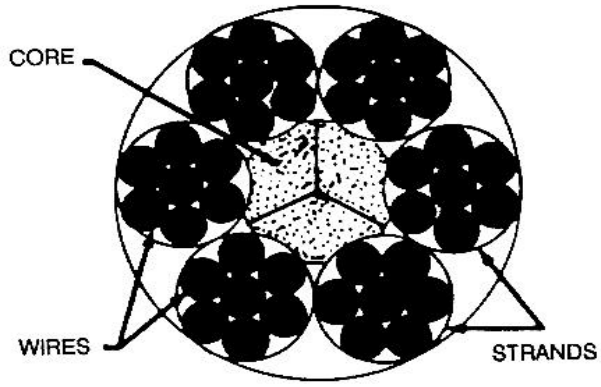

Figure 6-7. Makeup of wire rope

b. **Strand Construction.** In most wire rope used today, the wires and strands are preformed. Preforming means presetting wires in the strands into a permanent corkscrew form which they will have in the completed rope. As a result, preformed wire rope does not have the internal stresses found in nonpreformed wire rope, does not untwist as readily as nonpreformed wire rope, and is more flexible.

c. **Types of Lay.** Lay refers to the direction of winding of the wires in the strands and the strands in the rope. Both may be wound in the same direction or in opposite directions.

(1) In regular lay, the strands and wires are wound in opposite directions. Most common is the right regular lay in which the strands are wound right and the wires wound left. This lay is used in marine operations.

(2) In lang lay, the strands and wires are wound in the same direction. This type of wire rope is used on the blades of bulldozers and scrapers.

Downloaded from http://www.everyspec.com

6-15. MEASUREMENT. Whatever its grade, wire rope is usually measured by its diameter. Figure 6-8 shows the correct method of measuring the diameter of wire rope. To measure wire rope correctly, personnel should place it in the caliper so that the outermost points of the strands will be touching the jaws of the caliper.

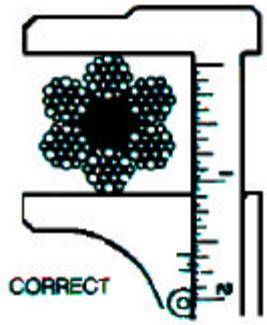

Figure 6-8. Measuring wire rope

6-16. SAFE WORKING LOAD AND BREAKING STRENGTH. The SWL and BS formulas are listed in the paragraphs below.

a. Formulas for determining the SWL of several grades of wire rope have constants that are not to be confused with safety factors. For example, the formula for the SWL in STONs (2,000 pounds) for extra improved plow steel wire rope is diameter squared multiplied by 10, or SWL = D^2 x 10. The formula to find the SWL of 1-inch, 6 x 19, extra improved plow steel wire rope is as follows: SWL = D^2 x 10 = 1 x 1 x 10 = STONs.

b. A figure relatively constant in marine operations, especially for new wire rope, is the SF, which is 5. The SF is used with the SWL to find the BS.

BS = SWL x 5
BS = 10 x 5 = 50 STONs

c. The formulas for improved plow steel, plow steel, and mild plow steel (6 x 19 wire rope) are as follows:

Improved plow steel: SWL = D^2 x 8 = STONs
BS-SWL x SF = STONs

Plow steel: SWL = D^2 x 7 = STONs
BS = SWL x SF = STONs

Mild plow steel: SWL = D^2 x 6 = STONs
BS = SWL x SF = STONs

6-17. INSPECTION OF WIRE ROPES. Wire ropes should be inspected frequently and replaced if frayed, kinked, worn, or corroded. The frequency of inspection depends on how often

Downloaded from http://www.everyspec.com

the rope is used. Wire rope used 1 or 2 hours a week requires less frequent inspection than one used 24 hours a day.

a. Common causes of wire rope failures are as follows:

- Using rope of incorrect size, construction, or grade.
- Allowing rope to drag over obstacles.
- Operating over sheaves and drums of inadequate size.
- Overwinding or crosswinding on drums.
- Operating over sheaves and drums that are out of alignment.
- Permitting rope to jump sheaves.
- Subjecting rope to moisture or acid fumes.
- Permitting rope to untwist.
- Using kinked rope.

b. Carefully inspect weak points and points of greatest stress. Worn or weak spots show up as shiny, flat spots on the wires. If the outer wires have been reduced in diameter by one-half, the wire rope is unsafe.

c. Inspect broken wires, since they show where the greatest stress occurs. If individual wires are broken next to each other, unequal load distribution at this point will make the rope unsafe. Broken wires are called fishhooks. To determine the extent of damage to the wire rope, users can slide a finger along one strand of wire for one complete turn, equal to the length of one wire rope lay. Next, count the number of fishhooks. If six or more fishhooks are discovered, the wire rope is unsafe and should be replaced immediately.

6-18. HANDLING. There are different handling methods for wire rope. These methods are listed below.

a. **Kinking.** When loose wire rope is handled, small loops frequently form in the slack portion of the rope. If personnel apply tension to the rope while these loops are in position, the loops will not straighten out but will form sharp kinks, resulting in unlaying of the rope. Personnel should straighten these loops out of the rope before applying a load. After a kink has formed in wire rope, it is impossible to remove it, and the strength of the rope is seriously damaged at the point where the kink occurs.

b. **Unreeling.** When removing wire rope from a reel or coil, personnel should be sure to rotate the reel or coil. If the reel is mounted, the wire rope may be unwound by holding the end and walking away from the reel. If a wire rope is in a small coil, personnel may stand the coil on end and roll it along the deck, barge, wharf, or ground. Remove any loops that may form, although rotating the reel or coil usually avoids causing loops to form.

c. **Seizing.** Personnel should seize (lash together) all wire rope before cutting it. If the ends of the rope are not properly secured, the original balance of tension is disturbed. Maximum use cannot be made on wire rope when some strands carry a greater load than others.

Downloaded from http://www.everyspec.com

(1) Annealed wire is recommended for the seizing. Figure 6-9 shows how to seize wire rope. Personnel should tighten the turns of the annealed wire rope closely so that they do not have to tighten them when the ends are being twisted together. The ends should be twisted together at one end of the seizing so that the completed twist can be tapped into the groove between two strands where it is less likely to be knocked off.

(2) There are three formulas for determining the number and length of seizings and the space between them. When a calculation results in a fraction, the next larger whole number is used. The following formulas are based on a 3/4-inch diameter wire rope.

(a) The number of seizings required equals about three times the diameter of the rope. For example: 3 x 3/4 = 2 1/4 or 3 seizings. Because the rope will be cut, six seizings are required so that there will be three on each rope end after the cut.

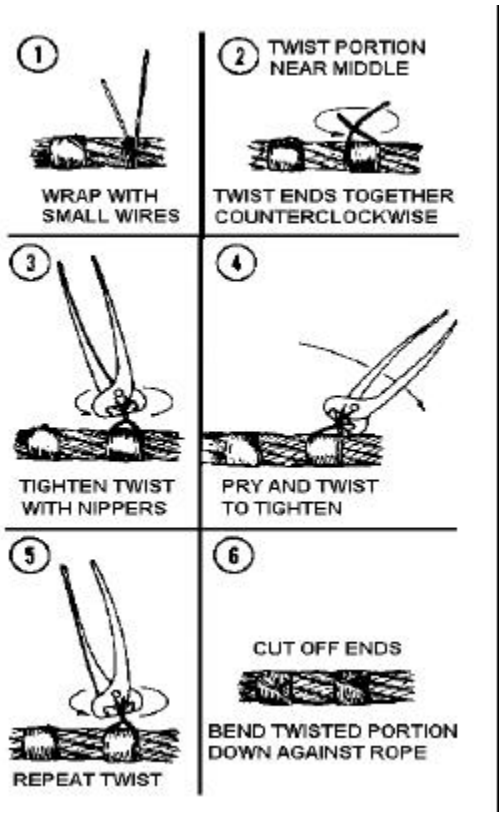

Figure 6-9. Seizing wire rope

(b) The length of a seizing should be equal to the diameter of the rope. For example: 1 x 3/4 = 3/4 or 1 inch.

(c) The seizings should be spaced a distance apart equal to twice the diameter. For example: 2 x 3/4 = 1 1/2 or 2 inches apart.

d. **Cutting.** Wire rope may be cut with a wire rope cutter, a cold chisel, a hacksaw, bolt clippers, or an oxyacetylene cutting torch. When cutting wire rope, personnel should follow the procedures outlined below.

(1) To seize the wire rope, insert it into the cutter with the blade between the two central seizings, close the locking device, then close the valve on the cutter. The handle should be pumped to build up enough pressure to force the blade through the rope.

(2) Use the bolt clippers on wire rope of fairly small diameter. Use the oxyacetylene torch on wire of any diameter. Cutting with the hacksaw and cold chisel is slower than cutting with the other tools and equipment.

e. **Coiling.** Personnel may need to take a length of wire rope from a reel and coil it down before using it. Small loops or twists will form if the wire rope is coiled in a direction opposite to

Downloaded from http://www.everyspec.com

the lay. To avoid loops, users should coil right lay wire rope clockwise and left lay wire rope counterclockwise. When a loop forms in the wire, they should put a back turn in as shown in Figure 6-10.

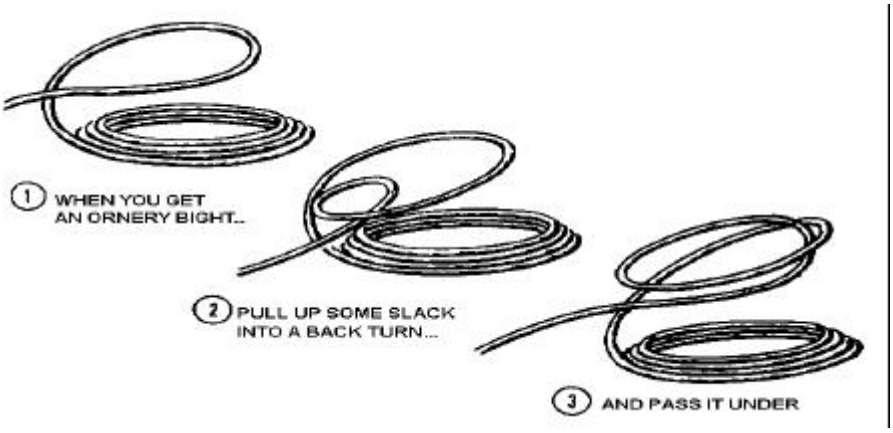

Figure 6-10. Putting a back turn in wire rope

f. **Size of Sheaves and Drums.** When a wire is bent over a sheave or drum, two things happen: Each wire is bent to conform to the curvature, and the wires slide against each other lengthwise because the inside arc of the rope against the sheave or drum is shorter than the outside arc. The smaller the diameter of the sheave or drum, the greater the bending and sliding. Personnel should keep this bending and moving of wires to a minimum to reduce wear. The minimum recommended sheave and drum diameter is 20 times the diameter of the rope. For example, for 5/8-inch rope: 20 x 5/8 = 12 1/2-inch sheave. If a 12 1/2-inch sheave is not on hand, personnel should use the next larger size, never a smaller size.

g. **Lubrication.** Wire rope is lubricated as it is manufactured. The lubricant generally does not last throughout the life of the rope, which makes relubrication necessary. Crater "C" compound is recommended, but personnel may use oil on hand rather than delay lubrication. Crater "C" compound should be heated before it is put on the wire rope. Personnel should use a brush if possible to apply lubricant. If a brush is not available, they may use a sponge or cloth, but they should look out for fishhooks or broken wires.

h. **Reversing Ends.** It is sometimes advisable to reverse or cut back ends to get more service from wire rope. The wear and fatigue on a rope frequently is more severe at certain points than at others. Reversing distributes stronger parts of the rope to the points getting wear and fatigue. To reverse ends, personnel remove the drum end, put it in the attachment, and then fasten the end taken from the attachment to the drum. Cutting back the ends has a similar effect, but not as much change is involved. In reversing ends, personnel should cut off short lengths of both ends to remove the sections with the greatest local fatigue.

i. **Storing.** Wire rope should be coiled on a spool for storage. Its grade, size, and length are noted on a tag attached to the rope or spool. Wire rope should be stored in a dry place to reduce corrosion. Personnel should not store it with chemicals or where chemicals have been

Downloaded from http://www.everyspec.com

stored because chemicals and their fumes can attack the metal. Personnel should always clean and lubricate wire rope before storing it.

j. **Cleaning.** Personnel can remove most of the dirt or grit on a used wire rope by scraping or steaming. Rust should be removed at regular intervals by wire brushing. Personnel must clean the rope carefully before lubricating to remove foreign material and old lubricant from the valleys between the strands and from the spaces between the outer wires. This permits the newly applied lubricant to freely enter the rope.

Section III. Marlinespike Seamanship

6-19. CHARACTERISTICS AND FIBER LINE. To be able to work with fiber line, personnel must know its characteristics and properties. They must be able to handle and care for the line, and tie basic knots, bends, and hitches.

a. **Materials for Fiber Line.** Fiber line is made of either vegetable or synthetic fibers. Vegetable fibers include manila, sisal, hemp, cotton, and flax. Synthetic fibers include nylon, Dacron, polyethylene, and polypropylene. The Army primarily uses nylon synthetic fiber line, so this manual covers only that synthetic fiber.

(1) Manila is a strong fiber that comes from the leaf stems of the abaca plant, a part of the banana family. Varying in length from 4 to 15 feet in their natural state, the fibers have the length and quality which gives manila rope relatively high elasticity, strength, and resistance to wear and deterioration.

(2) Sisal is made from sisalana, a species of the agave plant. Although sisal is not used much in the Army, it is covered here because it is a good substitute for manila. Sisal withstands exposure to seawater very well.

(3) Hemp is a tall plant that has useful fibers for making rope and cloth. It was used extensively before manila was introduced. Now hemp's principal use is in fittings such as ratline and marline. Because hemp is absorbent, the fittings are tarred to make them more water-resistant.

(4) Nylon made from mineral products is waterproof, absorbs shocks, stretches, and resumes its original length. It also resists abrasion, decay, and fungus growth.

b. **Construction of Fiber.** Figure 6-11 shows how fiber line is made by twisting fibers into yarns, yarns into strands, and strands into the finished line. The fibers are twisted from left to right to spin the yarn. The yarn is twisted from right to left to form the strands. The strands are then twisted from left to right to lay or form the line.

c. **Size of Line.** Fiber line is measured by its circumference in inches with the exception of "small stuff" which is fiber line 1 3/4 inches or less in circumference. It has three strands and the number of threads it contains determines its size. Small stuff will range in size from 6 to 21 threads. To determine the number of threads, personnel count the number in one strand and then multiply it by three. Small stuff is used for lashing material and heaving lines. Fiber line between

Downloaded from http://www.everyspec.com

1 3/4 and 5 inches in circumference is referred to as line, and line over 5 inches in circumference is referred to as hawser. Hawsers are used for mooring and towing.

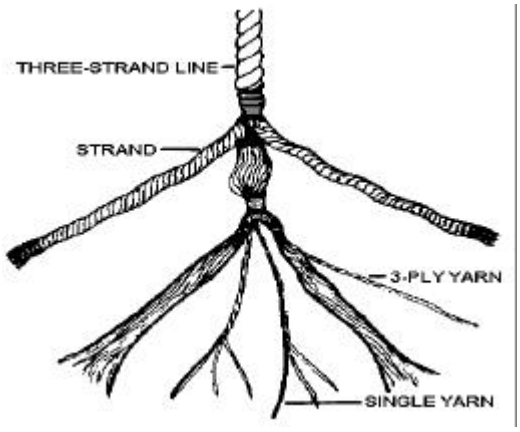

Figure 6-11. Fabrication of fiber line

d. **Strength of Fiber Line.** Manila is the standard line against which all other types of fiber line are measured. The measurement implies that all the other lines have the same circumference as the manila line against which each is measured. The strengths of the lines are as follows:

TYPE LINE	STRENGTH
2-in-1 braided nylon	300 percent
Three-strand nylon	250 percent
Manila	100 percent
Sisal	80 percent

Three-strand nylon line will stretch 30 to 35 percent under an average load or a load that does not exceed the safety factor for that size line. Three-strand nylon line will stretch 40 percent without being damaged and will draw back to its original length.

e. **Useful Formulas.** To find the SWL and BS of the various lines, some useful formulas are listed below.

(1) The manufacturer states the size and BS of its lines and if available, crew members should use the manufacturer's figures for determining the strength of line. If this information is not available, personnel should use the following formula and constant for type line to compute the SWL and the BS: C^2 x constant for type line = SWL (in pounds), where "C" denotes circumference in inches. Constants for type line are as follows:

Downloaded from http://www.everyspec.com

TYPE LINE	CONSTANT
Sisal	160
Manila	200
Three-strand nylon	500
2-in-1 braided nylon	600

For example, to find the SWL of a 3-inch sisal: 3^2 x 160 = 9 x 160 = 1,440 pounds SWL

(2) In marine operations an SF of 5 is generally used for new line or line that is in good condition; old or worn line may have an SF of 3. As line ages and wears through use, the SF drops. If the SF is multiplied by the SW, the result is the BS of the fiber line. The BS is the amount of weight in pounds required to part the line. The BS of a line divided by the SF of 5 results in the SWL.

EXAMPLE 1: Find the BS of 3-inch manila line.

Solution: C^2 x constant = SWL
3^2 x 200 = 9 x 200 = 1,800 pounds
BS = SWL x SF = 1,800 x 5 = 9,000 pounds

EXAMPLE 2: Find the SWL for a 6-inch hawser that has a BS of 36,000 pounds.

Solution: $SWL = \frac{BS}{SF} = \frac{36,000}{5} = 7,200$ pounds

6-20. CORDAGE. In marine usage, cordage is a collective term that includes all cord, twine, line, and string made from twisted vegetable or synthetic fibers. Cord, string, and twine are loosely used to mean small line.

a. Cotton twine is similar to the string found in homes. It is used for temporary whippings and should be run through beeswax before use.

b. Sail twine is made of flax or of a better grade of cotton than that used in cotton twine. It is waxed during manufacture. Measured by the number of plies, sail twine comes in three to seven plies. Like a yarn, a ply has a certain number of fibers in it. Sail twine is used for whippings.

c. Marline is tarred hemp. It is made of two yarns with fibers making up the yarns. Marline is used for whippings on lines 3 inches and larger.

6-21. INSPECTION OF LINES. The outside appearance of the line is not always a good indication of its internal condition. Therefore, it is necessary to inspect line inside as well as outside. Overloading a line may cause it to break with possible damage to materiel and injury to personnel. Before using unfamiliar line, or line that has been stored for a long period of time personnel should perform the following procedures.

a. Inspect line carefully at regular intervals to determine its condition. Untwist the strands slightly to open the line to examine the inside. Mildewed line has a musty odor and inside

Downloaded from http://www.everyspec.com

fibers have a dark, stained appearance. It is easy to identify broken strands of yarn. Dirt and sawdust-like material inside the line means that it has been damaged. If the line has a core, it should not break away in small pieces. If it does, the line has been overstrained. If the line appears to be satisfactory in all respects, pull out two fibers and try to break them. Sound fibers should offer considerable resistance to breakage.

b. When any unsatisfactory conditions are found, destroy the line or cut it in short pieces. Make sure that none of these pieces is long enough to permit its use. This not only prevents the use of line for hoisting, but saves the short pieces for miscellaneous use such as lashings, whippings, and seizings.

6-22. UNCOILING NEW LINE. New Line is coiled, bound, and wrapped in burlap for protection. Since the burlap covering protects the line during storage and prevents tangling, it should not be removed until the line is to be used. To open, personnel strip back the burlap wrapping and look inside the coil for the end of the line. It should be at the bottom of the coil. If it is not, turn the coil over so that the end will be at the bottom. Pull the end of line up through the center. As line comes up through the coil it will unwind in a counterclockwise direction. Nylon is handled differently from natural fiber line. Nylon comes on reels and to uncoil it, personnel should place the reel on stands or jacks.

6-23. WHIPPING LINE. Personnel must never cut a line or leave the end of a line dangling loose without a whipping to prevent it from unlaying. A line without whipping will unlay of its own accord. Whenever a line or hawser has to be cut, whippings should be put on first, on each side of the cut. To prevent fraying, a temporary or plain whipping can be put on with any type cordage, even rope yarn. Figure 6-12 shows one of the several methods that can be used for putting a temporary whipping on a line.

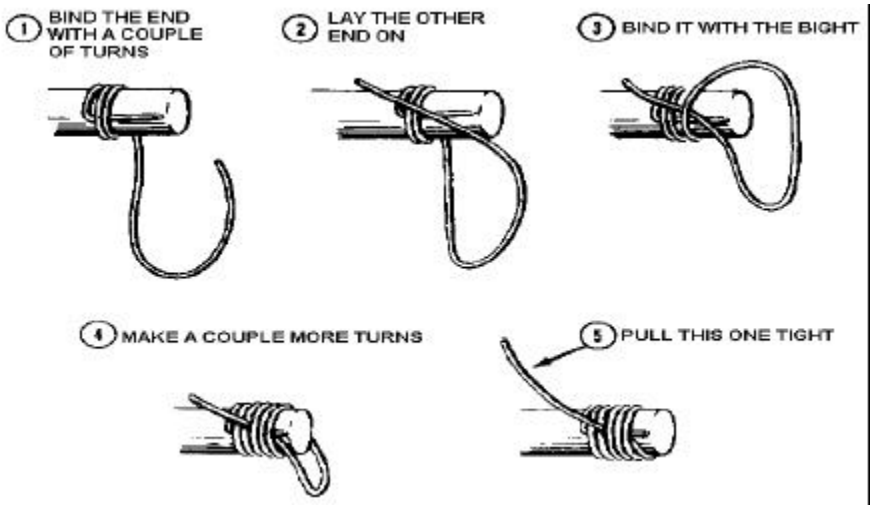

Figure 6-12. Plain or temporary whipping

Downloaded from http://www.everyspec.com

a. To make a temporary whipping, personnel should-

- Lay the end of the whipping along the line and bind it down with three or four round turns.
- Lay the other end the opposite way.
- Bind this end with a bight of the whipping.
- Take a couple more turns.
- Take the bitter of the whipping and pull it tight.

b. A permanent whipping, as its name implies, is put on to stay. One way to fasten a permanent whipping is with a sewing palm and needle. Sewing palms are made for both right- and left-handed people. The width of the permanent whipping should equal the diameter of the line. Two whippings are recommended. The space between the two whippings should be six times the width of the first whipping. The needle is threaded with sail twine, doubled (Figure 6-13 shows a single strand for clearness). When putting on permanent whipping, personnel should—

- Put the needle through the middle of a strand so that it comes out between two strands on the other side.
- Wind the turns toward the bitter end. (The number of turns or the width of the whipping will depend on the diameter of the line.)
- Push the needle through the middle of a strand so that it comes out between two strands again.
- Go up and down between strands to put a cross-seizing between each pair of strands.
- Pull each cross-seizing taut before taking the next one.
- Ensure the thread comes out through the middle of a strand the last time it is pushed through, so that the strand will hold the end of the twine after it is knotted and cut.

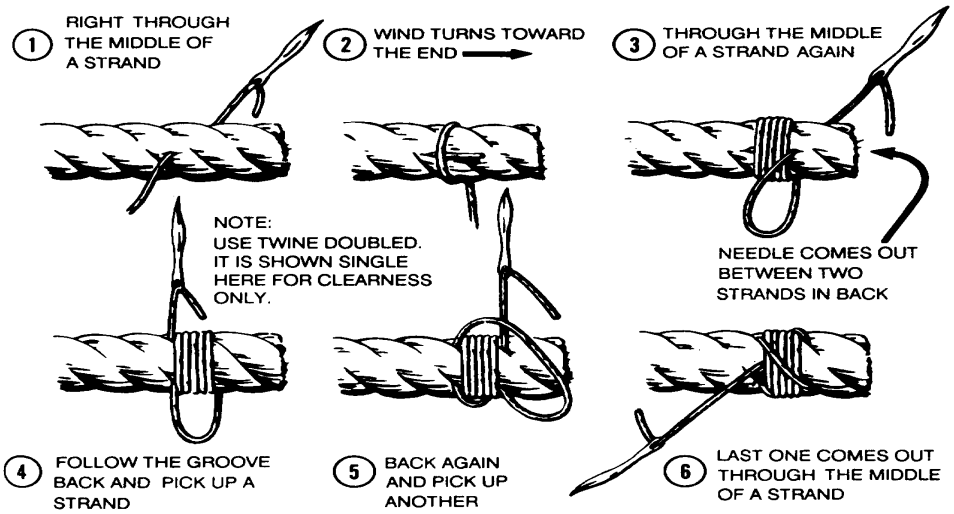

Figure 6-13. Making a permanent whipping

Downloaded from http://www.everyspec.com

6-24. KNOTS, BENDS, AND HITCHES. Each of the three terms—knot, bend, and hitches—has a specific definition. The choice of the best knot, bend, or hitch to use depends largely on the job it has to do. In a knot, a line is usually bent or tied to itself, forming an eye or a knob or securing a cord or line around an object, such as a package. A good knot must be easy to tie, must hold without slipping, and must be easy to untie. In its noun form, a bend ordinarily is used to join the ends of two lines together. In its verb form, bend means the act of joining, bent is the past tense of bend. A hitch differs from a knot and a bend in that it ordinarily is tied to a ring, around a spar or stanchion, or around another line. It is not merely tied back on itself to form an eye or to bend two lines together. This portion of the manual explains why a given type is used and also gives the efficiency or strength of many of the knots, bends, and hitches.

WARNING: Tying a knot, bend, or hitch in a line weakens it because the fibers are bent sharply, causing the line to lose varying degrees of efficiency or strength. Never tie a knot on which you are not willing to stake your life. A general rule to follow, then, is to use a knot, bend, or hitch for temporary work and a splice for permanent work because it retains more of the line's strength.

a. **Overhand Knot.** The overhand knot shown in Figure 6-14 is the basis for all knots. It is the simplest and the most commonly used. Personnel may use this knot to prevent the end of a line from untwisting, to form a knot at the end of a line, or to be part of another knot. When tied to the end of a line, this knot will prevent the line from running through a block, hole, or other knot.

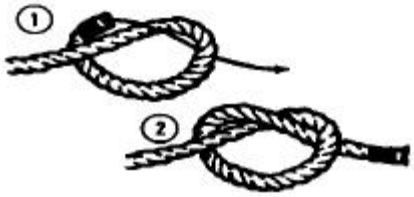

Figure 6-14. Overhand knot

b. **Figure Eight Knot.** This knot shown in Figure 6-15 forms a larger knot at the end of a line than an overhand knot forms. It also prevents the end of the line from running through a block. Personnel can easily tie this knot by forming an overhand loop in the line and passing the running end under the standing part, up the other side, and through the loop. They can tighten the knot by pulling on the running end and the standing part.

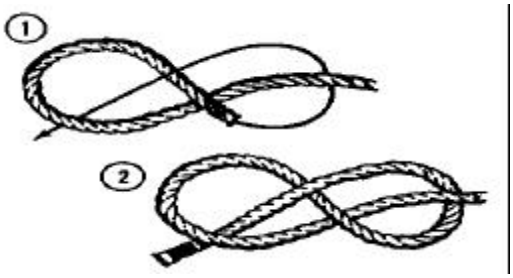

Figure 6-15. Figure eight knot

c. **Square Knot.** Personnel use the square knot to tie two lines of equal size together so that they will not slip. Figure 6-16, page 6-20 shows that in the square knot the end and standing part of one line comes out on the same side of the bight formed by the other line. This knot will not hold if the lines are wet or are of unequal sizes. It tightens under stain but can be untied by grasping the ends of the two bights and pulling the knot apart. Its strength is .45 percent. To avoid a "granny" or a "fool's knot" which will slip, personnel should follow this procedure: Pass the end in your right hand over and under the part in your left hand as illustrated in Figure 6-16.

Downloaded from http://www.everyspec.com

With your right hand, take the end that was in your left hand and pass the end under and over the part in your left hand.

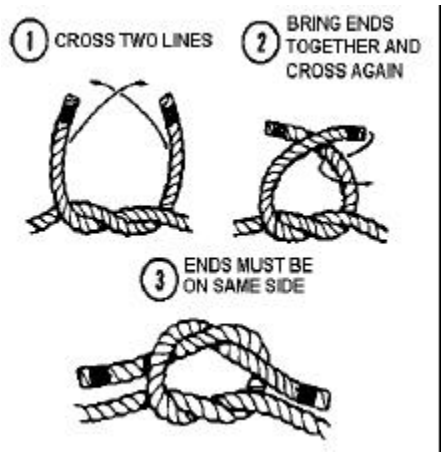

Figure 6-16. Square knot

d. **Bowline.** The bowline is used to make a temporary eye in the end of a line. For permanent use, put an eye splice on the line. A bowline will not slip or jam and unties easily. One use of a bowline is for tying a heaving line or messenger to a hawser and throwing it to a pier where line handlers can pull the hawser to the pier. To tie a bowline (see Figure 6-17), hold the standing part with your left hand and the running end with your right. Flip an overhand loop in the standing part, and hold the standing part and loop with the thumb and fingers of your left hand. Using your right hand, pass the running end up through the loop, around the standing part, and down through the loop. Its strength is 60 percent.

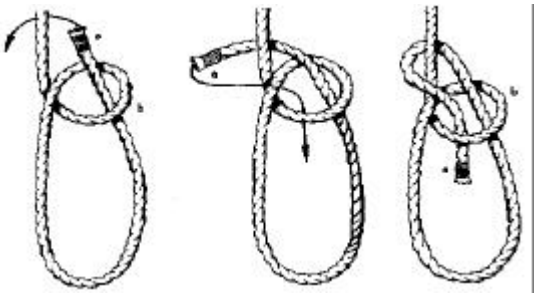

Figure 6-17. Bowline

e. **French Bowline.** A French bowline is used as a sling for lifting an injured person. For this purpose one loop is used as a seat and the other loop is put around the body under the arms, with the knot drawn tight at the chest. Even an unconscious person can be hoisted safely in a properly secured French bowline, because the weight applied will keep the two loops tight so that the individual will not fall out. Personnel must not allow the loop under the person's arms to catch on any projections. The French bowline may also be used if a person is working alone and needs both hands free. The two loops of the knot can be adjusted to the required size. Figure 6-18 shows the step-by-step procedure for tying the French bowline.

Downloaded from http://www.everyspec.com

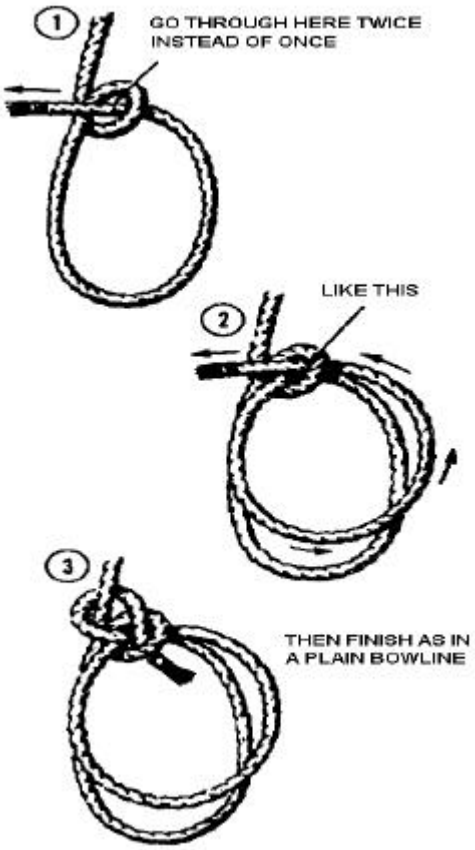

Figure 6-18. Tying a French bowline

f. **Half Hitch.** The half hitch is used to back up other knots, and is tied with the short end of the line. Personnel should not tie two half hitches by themselves; instead, they should take two round turns so that the strain will be on the line, not the hitches. Then they tie the hitches (see Figure 6-19).

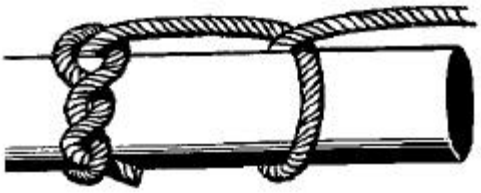

Figure 6-19. Half hitch

g. **Clove Hitch.** The clove hitch is the best knot for tying a line to a ring, a spar, or anything that is cylindrical. It will not jam or pull out and has a strength of 55 to 60 percent (see Figure 6-20).

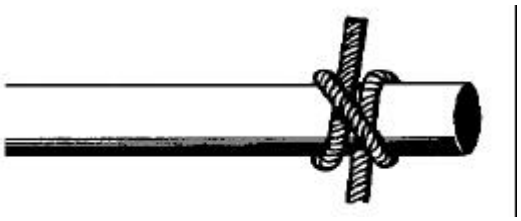

Downloaded from http://www.everyspec.com

Figure 6-20. Clove hitch

h. **Stopper Hitch.** A slight defect of a clove hitch is that it can slide along the cylindrical object to which it is tied. To guard against this, personnel should use a stopper hitch (commonly called a rolling hitch) which is illustrated in Figure 6-21. This figure shows fiber rope; with wire rope, personnel would use a small chain.

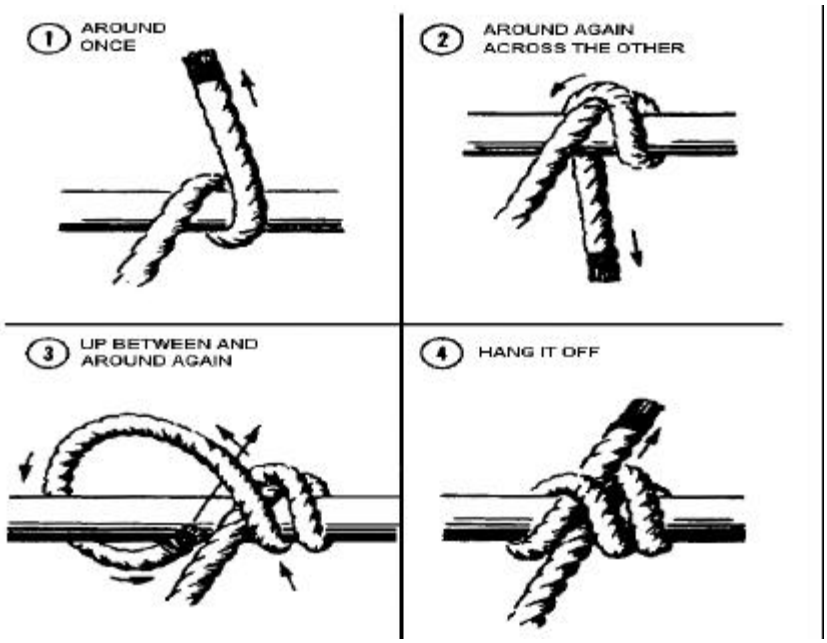

Figure 6-21. Stopper hitch

(1) When tying, personnel should take a turn around the line with the stopper as in the first view, pull tight, and take another turn. This turn must cross the first turn (first view) and then pass between the first turn and the stopper (second view). This completes the stopper hitch itself, but it must be stopped off in one of several ways.

(2) Personnel can take two or more turns with the lay of the line and then seize the stopper to the line with marline. Another method is to tie a half hitch directly above the stopper hitch. A third method is to tie a half hitch above the rolling hitch (third view), and then take a couple of turns against the lay, and seize the stopper to the line.

6-25. SPLICING THREE-STRAND FIBER LINE. Splicing is a method of permanently joining the ends of two lines or of bending a line back on itself to form a permanent loop or an eye. If two lines are to be spliced, strands on an end of each line are unlaid and interwoven with those of the standing part of the line. Small stuff can be spliced without a fid, which is a tapering length of hard wood used in splicing larger lines. A knife is used to cut off the ends of the strands.

a. **Short Splice.** The short splice is as strong as the rope of which it is made. However, the short splice increases the diameter of the rope and can be used only where this increase in diameter will not affect operation. The splice is frequently used to repair damaged ropes or where

Downloaded from http://www.everyspec.com

two ropes of the same size are to be joined together permanently. Damaged parts of the rope are cut out and the sound sections are spliced. Personnel should follow these steps—

(1) Untwist one end of each line five complete turns. Whip or tape each strand. Bring these strands tightly together as in Figure 6-22, view 1, so that each strand of one line alternates with a strand of the other line. Put a temporary whipping on the lines where they join to keep them from suddenly coming apart. Do this procedure with small lines until you are skilled enough to hold them together while you tuck.

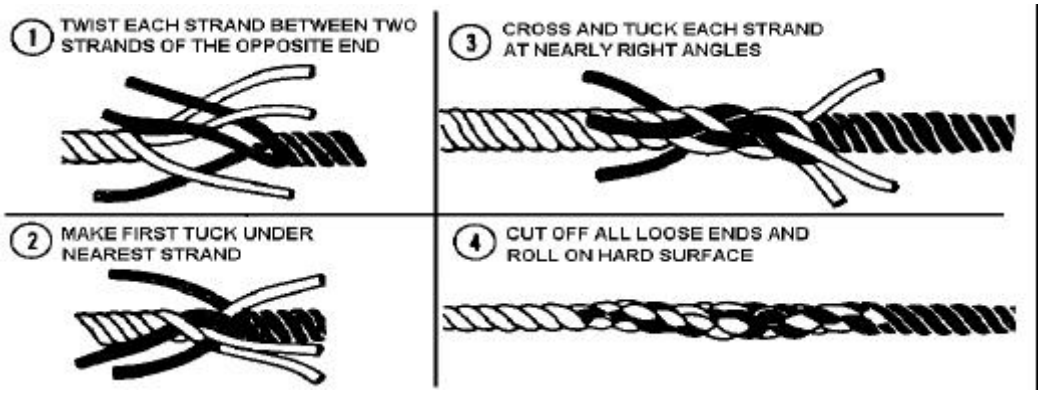

Figure 6-22. Short splice

(2) Starting with either line, tuck a round of strands in the other line. Then, using the strands of the other line, tuck a round in the first line. Make sure to tuck in one direction, the reverse and tuck in the other direction. When making a round of tucks, regardless of the direction, face where the lines are butted so you will always tuck from right to left. Pull each strand as required to tighten the center of the splice.

(3) Tuck two more rounds in each direction. After tucking in one direction and reversing and tucking in the other direction, pull the strands as required to strengthen the center of the splice. When finished with three rounds of tucks in each direction, cut off any excess length on the strands.

NOTE: To have a smoother splice, you may cut off one-third of the circumference of each strand before making the second round of tucks and another third before the third round.

(4) When the splice is completed, cut off the excess strands as before. Lay the splice on the deck and roll it with your foot to smooth out and tighten the splice.

b. **Eye Splice.** When a permanent loop is to be put in the line, personnel should use an eye splice which has a strength of 90 to 95 percent. (Compare this with the strength of a bowline which is 60 percent.) Personnel should follow these steps:

(1) Unlay (untwist) the strands in the end of the line four or five times and splice them into the standing part of the line by tucking the unlaid strands from the ends into the standing part. Whip or tape the ends of the strands. An original round of tucks, plus two more complete

Downloaded from http://www.everyspec.com

rounds, is enough. If the line parts, it will likely part in the eye rather than in the splice, so three rounds are as effective as a greater number.

(2) Always whip or tape the ends of the strands before starting, otherwise, they will unlay and be troublesome. Seize large lines at the point where unlaying stops to avoid trouble working with them. For lines with up to 21 threads, you can open the strands in the standing part with your fingers. Use the fid for larger lines.

(a) Figure 6-23 shows how to make the first two tucks. Separate the strands in the end and hold them up as shown in the first step. Place the three unlaid strands against the standing part where they will be tucked, forming the desired eye. The middle strand facing you always tucks first. Put a reverse twist on the standing part so that you can raise the strand under which you will make the first tuck. Pick up the stand to be tucked, and tuck it under the strand raised. Always tuck from right to left or with the lay of the line.

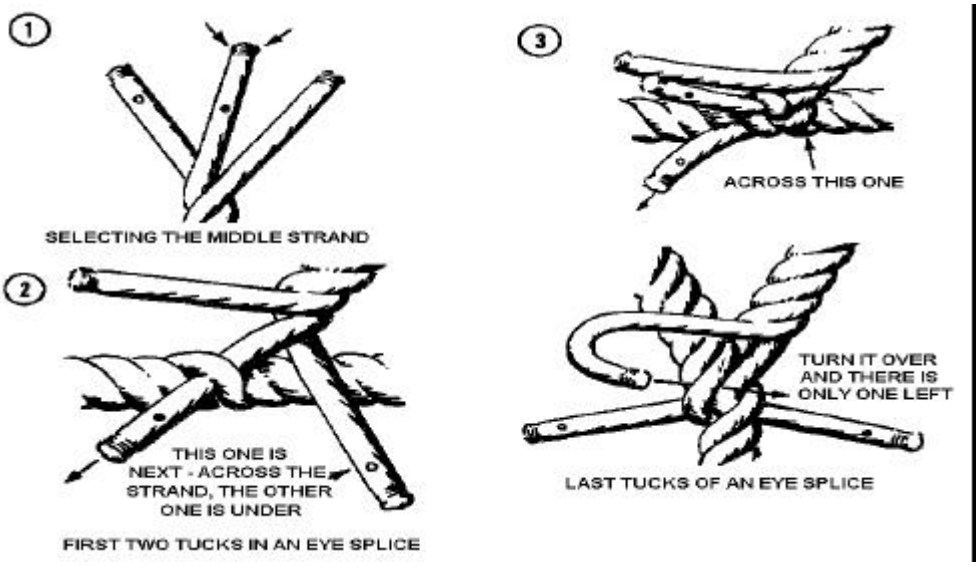

Figure 6-23. Making eye splices

(b) Be sure to keep the next strand, in step two, on the side of the line that is towards you. Tuck that strand next. Put it over the strand under which the first one is tucked, and tuck it under the next one.

(c) Now turn the incomplete eye over as shown. Check the third strand to be sure that it has not unlaid more. If it has, twist it back to where it should be. Take the last strand, put it across the standing part, turn its end back toward you, put it under the strand over which the first tuck was made, and tuck it in a direction toward you. This results in the third tuck going to where the second came out and coming out where the first tuck went in. After this round of tucks, there is a strand in each lay.

(d) Pull each of the three strands tucked backward at about a 45-degree angle to the eye to tighten the splice.

Downloaded from http://www.everyspec.com

(3) The first round of tucks is the key to making a perfect eye splice; the rest is easy. Starting with any strand, simply tuck each one over and under two more times. None of the last two rounds requires an over and back tuck. However, always tuck from right to left. As required, pull the tucked strands away from the eye and twist the splice and line to tighten them.

(4) After finishing the splice, bend the end of each strand back toward the splice and, using a knife, cut it off, up, and away, leaving 1/4-inch tip.

6-26. PUTTING AN EYE IN WIRE ROPE. This paragraph discusses how to put both a temporary eye and a permanent eye in wire rope. A temporary eye can be put in wire rope by using wire rope clips or by using a field expedient known as a "hasty eye" or "Molly Hogan" splice. A liverpool splice is the accepted method for putting a permanent eye in the end of a wire rope. With the proper equipment, and a bit of practice, a liverpool splice can be put in wire rope in less than 15 minutes.

a. **Splicing Tools.** With the exception of the wire cutters, Figure 6-24 shows the tools needed for splicing. The marlinespike is used for opening the strands in the standing part of the wire rope and for working the strands to be spliced into the standing part. The wire cutters are used for cutting the strands after the splice is complete. The hydraulic wire rope cutter is used to cut the length of wire rope that will be spliced. A thimble is used to keep the wires from moving and the rigger's vise from crushing them when a soft eye is made. After the soft eye is spliced, the thimble is removed. When an eye is to have a thimble as a permanent part, the thimble is the size of the eye desired.

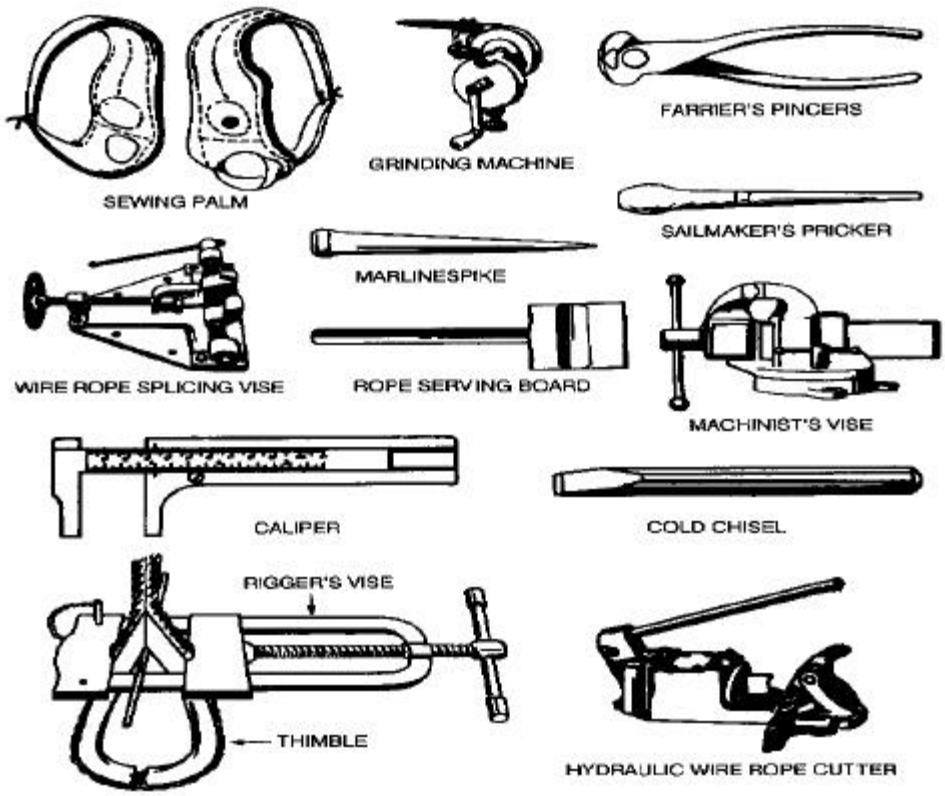

Downloaded from http://www.everyspec.com

Figure 6-24. Selected components of rigger's cargo set

b. **Temporary Eye.** A temporary eye may be put in wire by using wire rope clips. Figure 6-25 shows the correct way of using these clips. As the illustration shows, a wire rope clip consists of two parts: the U-bolt and the roddle, the part into which the U-bolt is inserted. Personnel should always put the U-bolt over the bitter end and the roddle on the standing part. This procedure protects the live or stress-bearing end of the rope against crushing. The roddle protects the rope and, therefore, should always be placed against the live end.

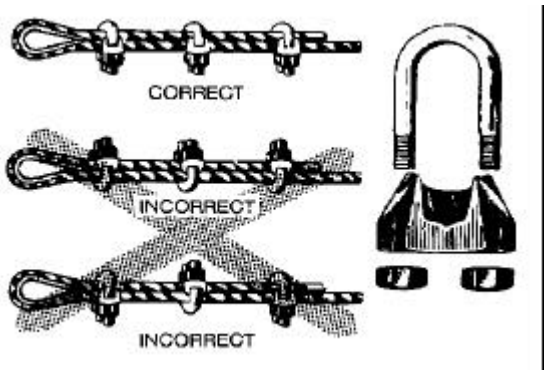

Figure 6-25. Correct use of wire clips

(1) To obtain maximum strength from the temporary eye splice, use the correct size and number of wire clips, and the correct spacing between them. Size is stamped on the roddle between the two holes. Personnel may use the following formula to determine the number of clips: 3 x diameter of wire rope + 1 = number of clips. For example, the number of clips needed for l-inch wire rope is: 3 x 1 + 1 = 4. To determine the correct space between clips, multiply the diameter of the rope by six. For example, the space between clips to be put on 1-inch rope is: 6 x 1 = 6 inches. Measure the space from the center of one clip to the center of the next one. If the calculation for either the number or the space results in a fraction, round off to the next higher whole number.

(2) The improved type of wire rope clips shown in Figure 6-26 has a few advantages over the older type. Both halves are identical and provide a bearing surface for both parts of the rope. Thus, it cannot be put on wrong and does not distort the wire. It also allows a full swing with a wrench.

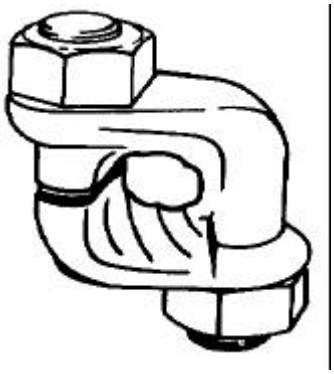

Figure 6-26. Improved type of wire rope clip

c. **Hasty Eye (Molly Hogan) Splice.** Occasionally it becomes necessary to construct a field expedient, called the hasty eye or Molly Hogan splice. This splice can be quickly made, but it is limited to about 70 percent of the strength of the wire rope. It should not be used to lift heavy

Downloaded from http://www.everyspec.com

loads. This splice can be used only when working with preformed wire rope. To make a hasty eye splice, personnel should follow these steps:

(1) Using a marlinespike, screwdriver, or, if necessary, a nail, separate the wire rope into two three-strand sections. These sections should be unlaid four times the diameter of the desired eye. If you want a l-foot diameter eye, unlay the sections back 4 feet.

(2) Use the two sections to form a loop of the desired diameter for the eye.

(3) Lay the strands back around each other to form the eye.

(4) After the strands have been laid back around each other and the eye has been formed, seize the wire to complete the splice.

d. **Liverpool Splice.** The liverpool splice is the easiest and most common of the wire splices to make. It is the primary splice used when a permanent eye is required. Personnel should follow these instructions:

(1) ***Forming the eye.*** To find the distance, the strands should be unlaid for an eye splice; then, multiply the diameter of the wire by 36 inches. (For example, to determine the distance of a 5/8-inch wire rope: multiply 5/8 x 36/1 = 180/8 = 22 1/2 or 23 inches.) Measure off that distance on the wire rope and put a seizing at that point. Cut the end seizing and carefully unlay the strands. Whip the ends of each strand with either sail twine or friction tape. Form the desired size eye and put the eye in the rigger's vise with the unlaid strands to your right as you face the vise. Stretch out the standing part of the wire, clamp and lash it and you are ready to start.

NOTE: When splicing wire, always insert the marlinespike against the lay of the wire, and make sure not to shove it through the core. The core must be on the left-hand side of the spike.

(2) ***Making the first tuck of strands one, two, and three.*** In the liverpool splice, the first strand goes under three strands, the second strand goes in the same opening but only under two strands, and the third strand goes in the same opening but only under one strand. All of the strands go in at the same point, but come out at different places (Figure 6-27, page 6-28). At this time, run the spike behind the three strands under which the first three are tucked, but above the first three tucked strands. Holding the marlinespike at a 90-degree angle to the standing part, turn the spike counterclockwise about one fourth of a turn and insert the core through the standing part. This is called "dipping the core." Make sure that the core is inserted under the marlinespike. Pull the core down and run it down into the splice.

(3) ***Tucking strands four, five, and six.*** Remember that the core was last between strands three and four and that the strands are numbered clockwise. To tuck strand four, put the marlinespike under the strand to the left of where one, two, and three were tucked through the standing part. Turn the marlinespike counterclockwise around the standing part and tuck the strand. Pull it tight and run it down with the spike. Tuck strand four around the same strand four times. Lock each tuck in place by holding the strand down and running the spike up. Push the marlinespike under the next higher strand on the standing part and tuck strand five around it four times, using the same procedure as with strand four. Then tuck strand six four times. This completes strands four, five, and six.

Downloaded from http://www.everyspec.com

(4) ***Running the core up.*** Burying the core in the center of the splice in the standing part is called "running the core up." Part of the core is run up and the excess is cut off. This is done before each of the first strands is tucked three more times. Run the spike under the same three strands under which number one strand was passed. With the spike in your left hand and the core in your right hand, move the spike to the left and down, and pull up the core with your right hand to tighten it. Then move the spike back to the right. Next run up the core into the center of the splice and cut off the excess.

(5) ***Tucking strands one, two, and three.*** To finish the splice, tuck number three, two, and one. Each is tucked three times in a row, ending up with an overall total of four tucks for each. To avoid kinking the strands on the last tucks, insert the spike and run it up the wire. Follow the spike up with the strand, shove it under the spike, and pull taut. Keeping a strain on the strand, work the spike and strand back around and down together. Hold the strand there and work the spike back up the wire. Follow up with the strand and take the last tuck. Work the strand back down and hold it there. Before pulling out the spike, run it back up until the strands of the standing wire bind the working strand in place. Make the second and third tucks with the remaining strands in the same way.

(6) ***Completing a splice.*** Remove the wire from the vise, use a hammer to pound the splice into shape, and cut off the ends of the tucking strands close to the splice.

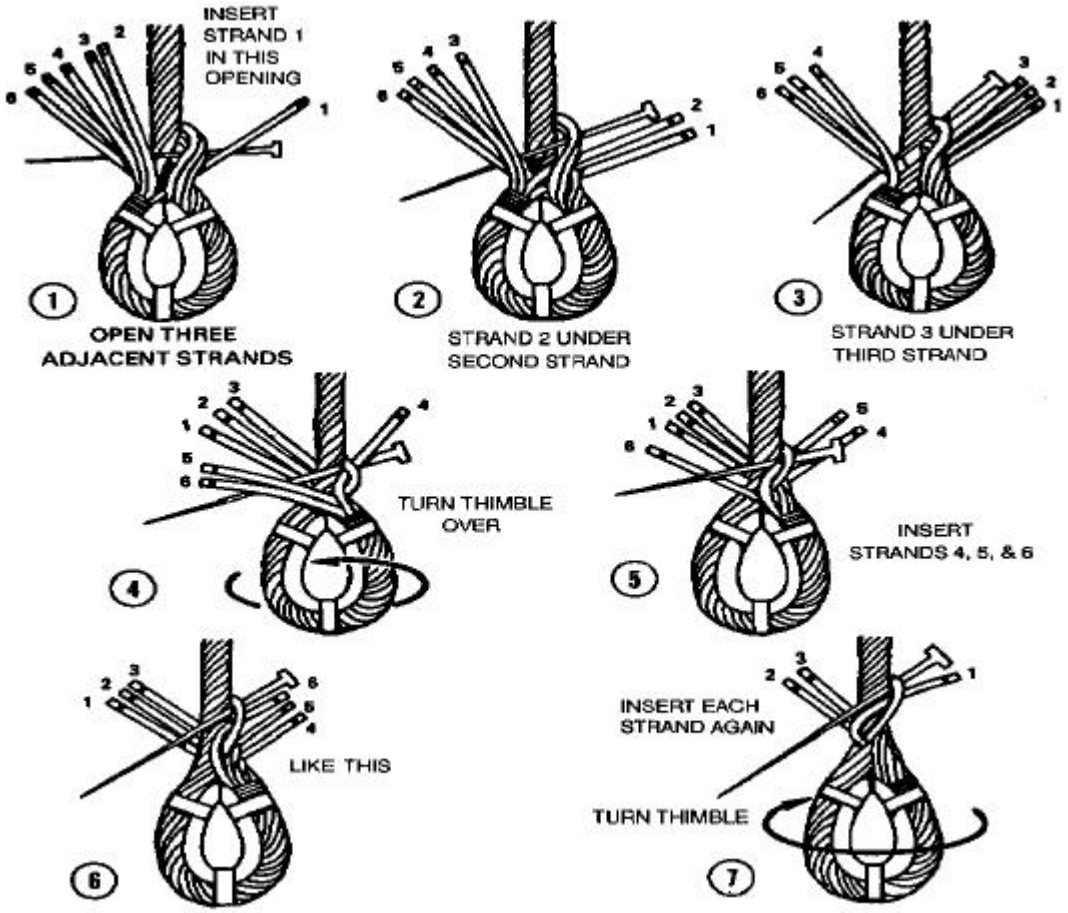

Downloaded from http://www.everyspec.com

Figure 6-27. Tucking strands of a liverpool splice

Downloaded from http://www.everyspec.com

PART THREE

OCEAN TERMINAL OPERATIONS

CHAPTER 7

PRESTOWAGE PLANNING

Section I. Terms and Factors

7-1. INTRODUCTION: This chapter introduces special terms and other factors which cargo handlers need to know for prestowage planning. It discusses steps for formulating plans for loading, stowing, and discharging cargo aboard cargo vessels as well as the new T-AKR 295/296 Class ships. Appendix A includes measurement conversion tables to aid in any necessary mathematical computations.

7-2. VESSEL TONNAGE TERMS. Every cargo vessel has two inherent physical limitations which planners must consider in planning cargo loading: the volume and the weight of cargo it can carry. The cargo planner must understand volume and weight terms related to the vessel and its cargo.

a. **Volume or Space Tons.** Volume or space tons express measurement of volume used in ocean shipping.

(1) A measurement ton is a measure of the space occupied by cargo, expressed in units of 40 cubic feet. To determine the number of measurement tons of cargo, cargo planners multiply height by length by width and divide the results by 40.

(2) A displacement ton is a unit of measure equal to the volume of one long ton of seawater (35 cubic feet). It is used in determining the displacement of vessels.

b. **Weight Tons.** Weight tons express measurements of weight.

(1) LTON-2,240 pounds.

(2) STON-2,000 pounds.

(3) MTON-2,204.6 pounds.

(4) Measurement ton-40 cubic feet.

c. **Tonnages.** Weight and volume tons when applied to vessels are expressed as volume or space tonnage, displacement tonnage, dead weight tonnage, and cargo dead weight tonnage.

(1) Volume or space tonnage consists of gross and net tonnage.

(a) Gross tonnage is the internal cubic capacity of the vessel expressed in gross tons. It is also called gross registered tonnage. One hundred cubic feet equals one gross ton.

Downloaded from http://www.everyspec.com

(b) Net tonnage is the tonnage remaining after deducting from the gross tonnage all nonrevenue-producing space taken by the boilers, engines, shaft alleys, steering apparatus, chain lockers, charthouse, crew quarters, and so forth.

(2) Displacement tonnage is measured in two ways.

(a) Displacement loaded is the weight in LTONs of the entire ship--the vessel itself, fuel, water, stores, dunnage, crew, and cargo.

(b) Displacement light is the weight in LTONs of the vessel less cargo, passengers, fuel, water, stores, dunnage, ballast (fixed and temporary), crew, and cargo.

(3) Dead weight tonnage is the total weight-carrying capacity of a vessel, or the difference between displacement light and displacement loaded, expressed in LTONs. It includes the weight of fuel, water, stores, dunnage, ballast, crew, and cargo.

(4) Cargo dead weight tonnage is the actual payload of the vessel. It is obtained by deducting the weight of fuel, water, stores, subsistence, dunnage, ballast, and crew from the dead weight tonnage.

d. **Bale Cubic Capacity.** Bale cubic capacity is the space available for loading cargo measured in cubic feet extending to the inside of the cargo battens on the frames and to the underside of the beams. This measurement is used to compute the space available for general cargo.

e. **Grain Cubic Capacity.** Grain cubic capacity is the maximum space available for cargo. It is measured in cubic feet from the inside of the shell plating to the underside of the deck plating. This measurement is used for computing cubic space available for loading bulk commodities.

7-3. STOWAGE PLANNING FACTORS. The amount of cargo that can be placed in a vessel will vary according to the skill and compactness with which it is stowed. The following factors help to determine the space available in the vessel for cargo, the amount of cargo that can be stowed, and the most economical use of space.

a. **Broken Stowage.** Broken stowage is lost cargo space in the holds of a vessel due to the contour of the hull and/or the shape of the cargo and prestowage methods. Dunnage, ladders, and stanchions are examples of broken stowage. Broken stowage is shown as a percentage figure which is an estimation of the space that will be lost. The percentage factor will be applied to the cargo or the ship's space.

b. **Stowage Factors.** The stowage factor is the relation of cube (cargo or space) to weight (cargo). Three stowage factors used in vessel cargo planning are as follows:

(1) Cargo stowage factor denotes the number of cubic feet of space required to stow 1 LTON of a specific commodity. For lots of 1 LTON or more, planners obtain this factor by dividing the cubic measurement in feet by the weight in LTONs. For example, given 49,610 cubic feet of C rations weighing 800 LTONs, a stowage factor of 62.01 or 62 is obtained by

Downloaded from http://www.everyspec.com

dividing 49,610 by 800. For lots weighing less than 1 LTON, the cubic measurement in feet is divided by the weight of the cargo in pounds and multiplied by 2,240. Thus, if 1,120 pounds of a specific cargo occupies 31 cubic feet, the stowage factor is 62 as shown in the example:

$$\frac{31}{1{,}120} \times 2{,}240 = 61.8 \text{ or } 62 \text{ (cargo stowage factor)}$$

(2) VSF is a number that represents the relationship between cargo dead weight tonnage and space available for stowing that cargo below deck. Planners determine the VSF by dividing the space available below deck for loading cargo (expressed in cubic feet) by the weight of the cargo to be loaded below deck (expressed in LTONs). The VSF is then used to allocate tonnage to be loaded in each compartment.

(3) CSF is a number that expresses the relationship between the LTONs of cargo allocated to a compartment and the cubic space within that compartment, less an allowance for broken stowage. The CSF is obtained by subtracting broken stowage from the cubic capacity of the compartment, and then dividing the LTONs allocated to the compartment into the remaining space. Although the VSF is used to determine basic tonnages going to each compartment, the CSF helps determine the commodities that can be used to fill those tonnage allocations. For example, compartments with a low CSF (high broken stowage) will tend to be filled with high density items.

c. **Free Space.** Free space is the space in the hold that is available for additional cargo after loading has been completed.

d. **Full and Down.** A vessel is said to be full and down when all the available cubic capacity has been used (full) and sufficient weight is aboard to submerge the vessel to its legal loadline (down). All the weightlifting and cubic capacities of the vessel will then have been used.

e. **Draft.** Draft is the vertical distance measured from the keel (lowest part of the hull) to the waterline.

f. **Draft Marks.** Draft marks (Figure 7-1, page 7-4) are numbers placed on the bow and stern to indicate the amount of water a vessel draws. These numbers are 6 inches high and 6 inches apart. They are center-punched and painted as closely to the bow and stern as possible, using white against a dark hull or black against a white or gray hull.

(1) The figure shows that the foot mark is at the bottom of the numeral. Thus, when the waterline strikes the bottom of the numeral 3, the reading is 3 feet even; when it strikes the center of the 3, the reading is 3 feet 3 inches (written as 3'-03"); and when it strikes the top of the 3, the reading is 3 feet 6 inches (written as 3'-06").

(2) Draft readings must be taken immediately upon arrival in port. Personnel will insert sailing and arrival drafts in the log. Draft readings must also be taken before and after receiving fuel, after the loading or discharging of cargo, or after any other great change in weight.

(3) A ship's officer must take the vessel's draft at 0700 and 1700 when the ship is alongside the wharf. This reading indicates the effect of cargo being taken aboard on the ship's trim and shows the amount of fuel and water consumed.

Downloaded from http://www.everyspec.com

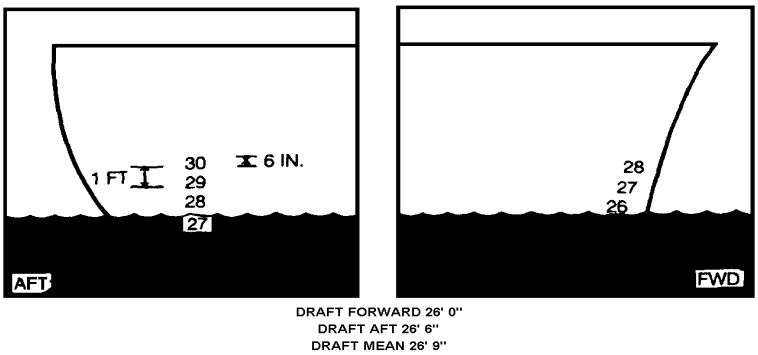

Figure 7-1. Draft marks

g. **Mean Draft.** Mean draft is the average of the drafts measured at bow and stern. For example, if the draft forward is 26 feet and the draft aft is 27 feet 6 inches, the sum of the two readings is 53 feet 6 inches. Dividing the sum by 2 gives a mean draft of 26 feet and 9 inches.

h. **Freeboard.** Freeboard is the measured distance from the upper edge of the main deck line amidships to the water.

i. **Trim.** Trim describes the position of a ship in relation to the still water level when viewed from broadside. The technical meaning of the term is the difference between the drafts of water at the forward and aft perpendiculars. Trim is a matter of great concern to the master of the vessel.

(1) After the fuel, water, and stores are taken aboard, the distribution of the cargo governs the trim of the vessel. In instances of late arrival of cargo, it may be difficult to keep the vessel in proper trim. In such cases it may be necessary to load water ballast in the fore or aft peak, whichever is required to provide the necessary trim. It is essential to periodically check the vessel's draft during loading operations so personnel can alter the distribution of weight before the ship gets completely out of trim. The draft should be checked after the fuel oil, cargo, and water are taken aboard.

(2) The usual trim requested by masters of cargo vessels is from 2 to 6 feet by the stern. The vessel's draft will be 2 to 6 feet greater aft than forward.

j. **Down by the Head.** This is a situation in which a vessel's draft forward is deeper than its draft aft.

k. **Down by the Stern.** This is a situation in which a vessel's draft aft is deeper than its draft forward.

l. **Sagging.** Sagging describes the condition of a ship that is loaded heavier amidships than it is forward and aft. This is true especially when the bow and stern are supported by seas while its amidships are in a trough. The tendency of the vessel to arch down or sag result in a

Downloaded from http://www.everyspec.com

bending movement which stresses the top members of the vessel in compression and the bottom members in tension.

m. **Hogging.** The reverse of sagging, hogging is the tendency of a ship to arch up amidships as the result of too much weight at the ends and not enough amidships.

n. **List.** A vessel has a list when one side of the vessel is higher than the other with respect to the longitudinal centerline. The amount of list is expressed in degrees measured vertically by an instrument called a clinometer. The list of a vessel is described as being to port or to starboard, according to which side is the lower side. The ship's officers and those in charge of cargo activities should know the reasons for a vessel listing while it is being loaded or discharged so they can ensure that immediate corrective steps are taken. In many instances, the list is caused by unequal distribution of fuel oil or water during the loading. The most serious cause of a list is uneven distribution of cargo. Personnel must ensure that the distribution of cargo in the vessel is not causing a list.

o. **Stability.** Stability is the tendency of a ship to return to its original position after it has been displaced. A ship has both longitudinal and transverse stability. Longitudinal stability may be obtained by evenly distributing weight through the length of the ship. Fairly good transverse stability may be obtained on some types of ships by placing two-thirds of the cargo (by weight) in the lower holds and one-third in the between decks. The planner who understands the fundamental principle of stability can load a ship with nearly perfect stability.

p. **Special Markings.** There are three special markings for vessels. These three markings are listed below.

(1) ***Plimsoll mark.*** The Plimsoll mark is the safe-load mark for the vessel, according to season and geographical location. The marking is a disk 12 inches in diameter, intersected by a horizontal line 18 inches long and 1 inch wide, the upper edge of which passes through the center of the disk (Figure 7-2, page 7-6). The disk is located amidship on each side below the deck line and, in addition to being painted, is center-punched in the hull.

(2) ***Loadline.*** The loadline and Plimsoll marks are placed amidships on both sides of the hull of a vessel to denote the maximum mean draft to which a vessel may be lawfully submerged for a particular voyage, depending on the area to be traveled and the season of the year. Figure 7-2 illustrates the loadlines found on American oceangoing cargo vessels. Loadline markings are used with the Plimsoll mark to indicate the maximum permissible draft of the ship in different circumstances and seasons. They are horizontal, 9 inches long and 1 inch wide, and extend from, and at right angles to, a vertical line etched 21 inches forward of the loadline disk (Figure 7-2).

(a) The summer loadline is indicated by the upper edge of line marked S.

(b) The winter loadline is indicated by the upper edge of line marked W.

(c) The winter North Atlantic loadline is indicated by the upper edge of a line marked WNA

Downloaded from http://www.everyspec.com

(d) The tropical loadline is indicated by the upper edge of a line marked T.

(e) The freshwater loadline in summer is marked by the upper edge of a line marked F. The difference between the freshwater loadline in summer and the summer loadline is the allowance made for loading in freshwater at the other loadlines. The tropical freshwater loadline is indicated by the upper edge of a line marked TF. This provision for deeper loading in freshwater is not applicable to the Great Lakes.

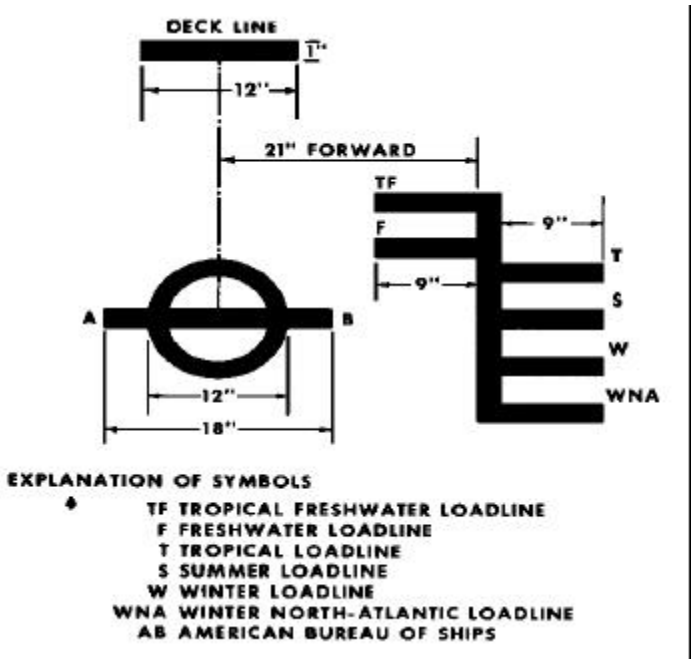

Figure 7-2. Loadline marks.

(3) ***Main deckline.*** The main deckline mark is a line 12 inches long and 1 inch wide located on each side of the hull amidships directly opposite the main deck plating and directly over the loadline.

7-4. STABILITY. Stability is a critical factor on vessels. For proper stability, personnel should load a vessel to produce easy rolling, neither too fast nor too slow. Personnel must ensure that the vessel does not carry excessive deckloads that could make it top-heavy.

7-5. STOWAGE AND CAPACITY BOOKLET. Stowage and capacity booklets are published by the US Maritime Administration for various vessel designs and contain information on the following:

- Hatch size.
- Headroom under deck.
- Weight limitations per square foot.
- Cargo boom capacity.
- Obstructions (ladders, escape hatches, bulkheads, and overhead beams).

Downloaded from http://www.everyspec.com

- Vessel capacities (bale cubic, grain cubic, fuel, water, and stores).
- Vessel dead weight scale.
- Trim table.
- Loadlines.
- Deck plans.

If a stowage and capacity booklet is not available for the ship being loaded, the information listed previously may be obtained from the local representative of the MSC or from the vessel itself if the situation warrants.

7-6. VESSEL DEAD WEIGHT SCALE. The cargo planner should know the dead weight tonnage of the vessel before planning the loading. Dead weight tonnage is determined by using the vessel dead weight scale. A particular vessel's dead weight scale gives the dead weight and displacement tonnages and the effects these tonnages have on the mean draft. The dead weight scale is made up of four columns (Figure 7-3, page 7-8).

- Column A (dead weight ton-saltwater) gives the lift capacity of the vessel. It shows the number of tons that may be carried in the vessel, including fuel, stores, ballast, water, dunnage, cargo, and so forth. This figure does not include machinery or equipment necessary for the operation of the vessel.
- Column B (draft [feet] to bottom of keel) shows the mean draft in feet and inches. This scale is graduated from the minimum draft of 8 feet to a maximum of 29 feet. The maximum legal draft to which this particular vessel may be loaded is 28 feet 6 3/4 inches. This figure is based on the legal loadline in summer saltwater.
- Column C (displacement tons, saltwater) gives the displacement tonnage of the ship plus any material placed in the vessel.
- Column D (tons per inch immersion) denotes the number of LTONs required to change the mean draft of the vessel 1 inch at various drafts.

a. Cargo planners use the dead weight scale to determine what the draft of the vessel will be after a given number of tons have been loaded. Using the dead weight scale shown in Figure 7-3, and using the Victory ship as an example, it can be determined that the vessel loaded with 9,000 LTONs including fuel, water, store, and cargo has a mean draft of 25 feet 4 1/2 inches at the beginning of the voyage. Figuring 50 LTONs of fuel, water, and stores used per day at sea, the vessel used 500 tons in a period of 10 days, thus reducing the mean draft to 24 feet 6 inches. From the dead weight scale, the cargo planner can estimate the draft of the vessel at the completion of the trip, and know whether the draft is acceptable for the harbor where the vessel will be discharged.

b. To determine the CDWT of a vessel, the dead weight tonnage must be known. This is given in the dead weight scale (Figure 7-3) as 10,805 LTONs, the total lift capacity of the vessel. In the dead weight column, the number 0 is listed directly opposite the displacement tonnage for the light ship. Cargo dead weight tonnage is determined by deducting the weight of operating supplies (fuel, water, stores, subsistence, dunnage, ballast, and the crew) from the dead weight tonnage. The numbers above 0 indicate tonnages added to the vessel in the form of operating supplies and cargo. Additional weight increases the ship’s mean draft. If 10,805 LTONs are added to the light ship, the vessel will be forced down in the water to a mean draft of 28 feet 6 3/4 inches. When the vessel has this mean draft, it has reached its displacement loaded. More than 10,805 LTONs

Downloaded from http://www.everyspec.com

would bring the mean draft above the legal loadline, and it could not legally sail. For example, assume that the vessel to be loaded will have the following on board:

	Long Tons
Stores	340
Fuel Oil	1,700
Fresh Water	240
Dunnage	100
Total operating supplies	2,380

The maximum dead weight tonnage (10,805 LTONs) minus operating supplies (2,380) equals 8,425 CDWT, the LTONs that may be loaded aboard the vessel.

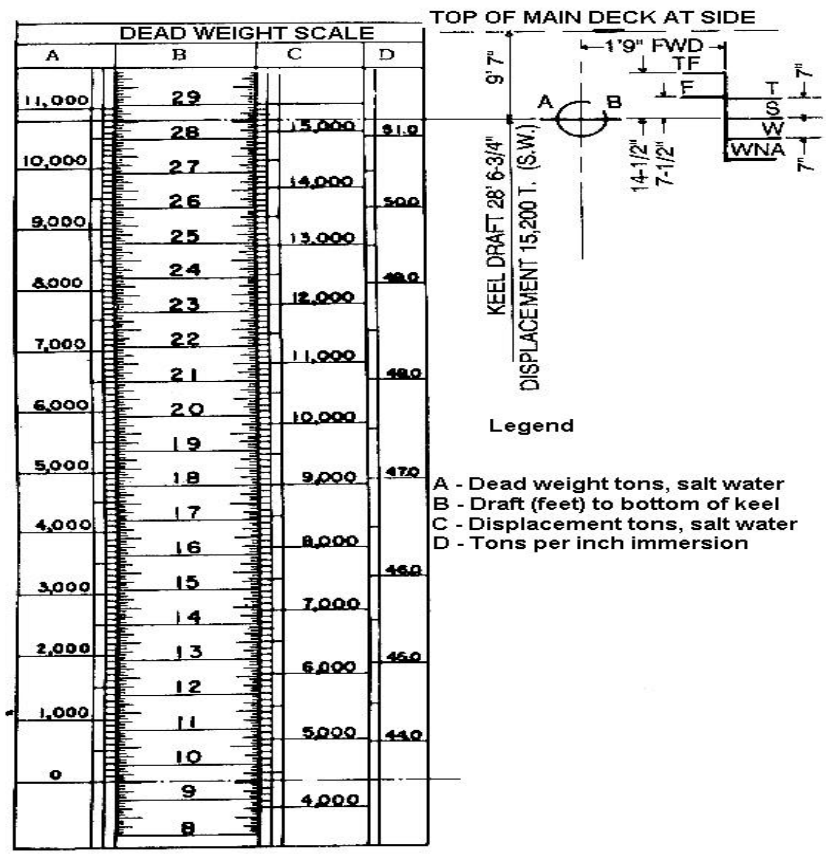

Figure 7-3. Vessel dead weight scale

7-7. WEIGHT DISTRIBUTION. Cargo planners prorate the weight of the cargo to be loaded throughout the cargo compartments. Tonnage will be distributed so that no undue strain is placed on any one part of the vessel.

a. **Vessel Stowage Factor.** An efficient method used to determine distribution is the VSF. The VSF, an important measurement in cargo stowage, is usually stated as the number of cubic

Downloaded from http://www.everyspec.com

feet that one LTON (2,240 pounds) of particular lot of cargo will occupy when properly stowed and dunnaged in the ship's hold.

NOTE: Cargo with a stowage factor of more than 40 is called measurement freight; cargo with a stowage factor of or below 40 is called dead weight freight.

To find the VSF, the bale cubic capacity noted in the stowage plan is divided by the CDWT. For example, assume that all cargo will be stowed below deck in a vessel having a bale cubic capacity of 456,525 cubic feet and a cargo carrying capacity of 8,425 LTONs. This results in a vessel stowage factor of 54.2. If only 7,430 LTONs are allocated, the bale cubic capacity of the vessel (456,525 cubic feet) divided by the weight of the cargo available for loading (7,430 LTONs) results in a VSF of 61.4. The cubic capacity of each compartment is then divided by the VSF to determine the number of tons to be planned for each compartment.

b. **Compartment Stowage Factor:** To find the compartment stowage factor, the bale cube taken from the stowage plan is noted and 10 percent of this figure is deducted as broken stowage. This results in a remaining space figure. The remaining space figure is divided by proposed tonnage. This result is rounded off to the nearest whole number and is the CSF.

7-8. TRIM TABLE. The trim of a vessel is the difference of the forward and aft draft. Trim is largely dependent upon the stowage of cargo. Most shipmasters prefer the stern to be from 2 to 6 feet deeper in the water than the bow. The term drag refers to this condition.

a. If a drag or a trim other than that obtained by using the VSF is desired, users should use the ship's trim table. Figure 7-4, pages 7-10 through 7-11 shows the profile of a victory ship, and directly below the profile is the ship's trim table. The purpose of this diagram is to give an approximate indication of the plus or minus changes in draft (in inches) that will occur as the result of adding a 100-ton load at any selected location on the ship.

NOTE: In this chapter, the Victory ship is used as a model for formulas and tables. Although the Victory ship is seldom used, the Reserve Fleet contains many of these vessels. If there is ever a war, these ships may be called into active duty and personnel will need to know how to load and discharge them. The steps and procedures are the same for all break-bulk vessels.

b. The trim table directly below the ship's profile in Figure 7-4 shows two scales, the upper one marked "28-foot draft" and the lower one marked "20-foot draft." The 20-foot scale is used for mean drafts up to 24 feet; the 28-foot scale is used for drafts over 24 feet. The scale closest to the vessel's mean draft should be used.

(1) Assume that 200 LTONs are to be loaded in hold number 2 and that the weight will be distributed evenly throughout the hold. The draft before loading is 18 feet 6 inches forward and 23 feet 4 inches aft. Since the mean draft is less than 24 feet, the correction figure directly under the center of the hold on the 20-foot scale is used. The forward draft will increase +7.2 inches, and the aft draft will decrease –3.2 inches for each 100 tons loaded in this location. When the corrections are multiplied by 2 (since 200 tons are to be loaded), it indicates that the bow will sink +14.4 inches and the stern will rise -6.4 inches. This will cause the draft to change to 19 feet 8.4 inches forward and 22 feet 9.6 inches aft.

Downloaded from http://www.everyspec.com

TRIM TABLE NOTES

THE FOLLOWING EXAMPLE WILL SHOW THE PROCEDURE TO BE FOLLOWED WHEN USING TRIM TABLE. ANY NUMBER OF ADDITIONS OR SUBTRACTIONS MAY BE MADE.

PROBLEM: DRAFTS AS READ BEFORE ADDING CARGO: -FWD 8'-6", AFT 23'-4". FIND THE DRAFTS AFTER LOADING 300 TONS IN THE FWD. PART OF No. 3 HOLD, 200 TONS EVENLY DISTRIBUTED IN No. 2 HOLD, AND 500 TONS IN THE AFTER PART OF No. 4 HOLD, THEN FIND THE DRAFTS AFTER EMPTYING D. B. No. 2 P&S.

1. LOCATE EACH WEIGHT ON PROFILE, FIND CORRECTIONS DIRECTLY BELOW THE WEIGHTS IN THE TABLE NEAREST TO THE DRAFTS AS READ. ADD UP CORRECTIONS.

CARGO	CORR. FWD.	CORR. AFT.
NO 3 HOLD—300 TONS	CORR. FWD = 3 x +5.6 = + 17 1/2"	CORR. AFT. = 3 x -1.7 = -5"
NO 2 HOLD—200 TONS	CORR. FWD = 2 x + 7.2 = +14 1/2"	CORR. AFT. = 2 x -3.2 = 6 1/2"
NO 3 HOLD—500 TONS	CORR. FWD. = 5 x -3.9 = 17 1/2"	CORR. AFT. = 5 x + 7.9 = + 39 1/2"
	TOTAL CORR. FWD. — = + 14 1/2"	TOTAL CORR. AFT. — 28"

2. ADD TOTAL CORRECTIONS TO DRAFTS READ BEFORE LOADING CARGO

DRAFTS READ BEFORE LOADING CARGO ..... FWD. 8'- 6" AFT. 23'- 4"
TOTAL CORRECTIONS ..... FWD. 11'- 2 1/2" AFT. 2'- 4"
DRAFTS AFTER LOADING ..... FWD. 9'- 8 1/2" AFT. 25'- 8"

3. CORRECTION FOR EMPTYING D. B. NO 2 128 TONS (CHANGE + & - SIGNS)

CORR. FWD. 1.28 x -7.2 = 9" CORR. AFT. 1.28 x + 3.2 = + 4" FWD. - 9" AFT. + 4"
DRAFTS AFTER EMPTYING D. B. NO 2 ..... FWD. 8'- 11 1/2" AFT. 26'- 0"
DRAFTS USING CONVOYS OF FORM ..... FWD. 9'- 01/2" AFT. 26'- 10 1/2"

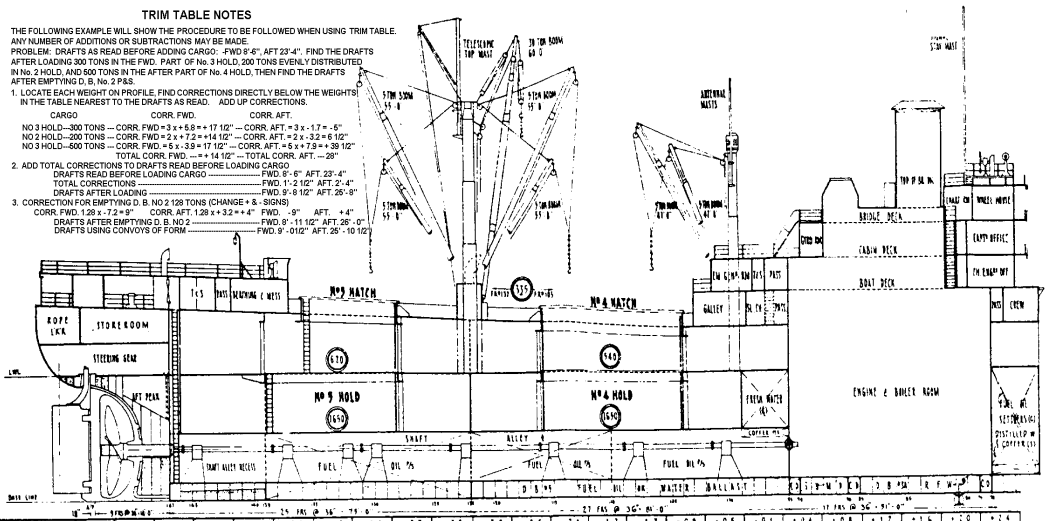

TRIM TABLE																																		
ZERO DRAFT	FWD	-7.4	-7.0	-6.6	-6.2	-5.8	-5.4	-5.0	-4.5	-4.1	-3.7	-3.3	-2.9	-2.5	-2.1	-1.7	-1.3	-0.5	-0.5	-0.1	+0.4	+0.8	+1.2	+1.6	+2.0	+2.4
	AFT	+11.2	+10.8	+10.4	+10.0	+9.6	+9.2	+8.8	+8.4	+8.0	+7.6	+7.2	+6.8	+6.4	+6.0	+5.6	+5.2	+4.7	+4.3	+3.9	+3.5	+3.1	+2.7	+2.3	+1.9	+1.5
20 FT DRAFT	FWD	-5.3	-4.8	-4.3	-7.8	-7.3	-6.9	-6.4	-5.9	-5.4	-4.9	-4.4	-3.9	-3.5	-3.2	-2.9	-2.8	-1.9	-1.6	-0.5	-0.1	+0.4	+0.9	+1.4	+1.9	+2.4
	AFT	+13.9	+13.4	+12.9	+12.4	+11.9	+11.4	+10.9	+10.4	+9.9	+9.4	+8.9	+8.4	+7.9	+7.4	+6.9	+6.4	+5.9	+5.4	+4.8	+4.3	+3.8	+3.3	+2.8	+2.3	+1.8

SHIPS STORES

SPACE	DECK	FRS	SIDE	BALE CU FT.
PAINT LOCKER	FOCSLE DECK	36-38	PORT	154
LAMP LOCKER	" "	36-38	STBD	141
BOSN STORES	MAIN DECK	8-14	⊕	2501
BOSN STORES IN WAY OF MAST	" "	51-53	P & S	325
" " " "	" "	121-123	P & S	325
" "	SECOND DECK	A-11	⊕	2050
PAY STORES	" "	82-89	PORT	2372
STWDS STORES	" "	91-93	PORT	1314
ROPE LOCKER	AFT FLAT 35'6"	158-163	STBD	870
ENG'RS STORES	MACHY. FLAT	90-93	PORT	1080
STORE ROOM	AFT FLAT 35'-0"	147-152	STBD	1080
STOREROOM	" "	147-152	PORT	1080
TOTAL SHIPS STORES				13772
REFRIGERATED SHIPS STORES				
VEGETABLE BOX	SECOND DECK	78-84	STBD	2004
MARPLING ROOM	" "	84-85	"	604
FISH BOX	" "	84-86	"	269
PAINT BOX	" "	86-89	"	371
MEAT BOX	" "	89-93	"	1347
TOTAL SHIPS REFRIGERATED STORES				4595

DRY CARGO

SPACE	FRS	C OF G FROM ⊠	C OF G ABV BL	CUBIC FEET GRAIN	CUBIC FEET BALE
No 1 FOCSLE TWEEN DECK	14-37	-161.2	44.8	25910	22045
UPPER TWEEN DECK	14-37	-159.8	35.8	28100	23785
HOLD	14-37	-158.0	18.9	32650	27910
TOTAL HOLD No 1				86300	73740
No 2 UPPER TWEEN DECK	37-52	+112.6	33.5	38310	33010
LOWER " "	37-52	+111.5	22.6	25965	21805
HOLD	37-52	+110.7	10.3	33095	27945
TOTAL HOLD No 2				85370	76760
No 3 UPPER TWEEN DECK	52-78	+51.2	33.1	50305	45555
LOWER " "	52-78	+53.5	22.5	44755	37755
HOLD	52-78	+51.9	10.7	61340	52840
TOTAL HOLD No 3				158000	136150
No 4 UPPER TWEEN DECK	99-122	-80.5	33.3	54405	45200
HOLD	99-122	-80.5	21.1	58675	51100
TOTAL HOLD No 4				113080	100300
No 5 UPPER TWEEN DECK	122-147	-156.0	34.8	45130	43630
HOLD	122-147	-145.0	21.4	37385	25305
TOTAL HOLD No 5				81575	69535
GRAND TOTAL DRY CARGO				528,325	456,925

LUBRICATING & DIESEL OIL

No	TANK		FRS	C OF G FROM ⊠	C OF G ABV. BL.	OIL 98% FULL GALLONS	BARRELS	TONS
	LUB OIL STORAGE	S	94-99	-36.52	31.28	1777	42	6.4
	" " SETTLING	P	94-99	36.52	31.28	1772	42	6.4
	DIESEL OIL	P	90-95	-51.50	2.00	815	19.5	2.6
	" "	S	90-95	-51.50	2.00	815	19.5	2.6
	DO FOR DIES'L GENERATOR		101	-57.10	51.86	90	2.0	0.3
	FO FOR GALLEY RANGE		101-102	-57.60	48.46	27	0.5	0.1

FRESH WATER

No	TANK		FRS	C OF G FROM ⊠	C OF G ABV. BL.	F.W. 100% FULL GALLONS	BARRELS	TONS
	DISTILLED WATER	S	74-78	+18.02	17.29	5710		2.7.2
4A	RESERVE FEED PBL BOT	P	75-89	-5.65	2.01	14850		5.5
4A	" " " "	C	75-89	-6.00	2.00	17704		6.5.7
4A	" " " "	S	75-89	-5.99	2.02	15407		5.7.2
	POTABLE WATER	C	95-99	-45.00	21.52	25783		9.5.7
	TOTAL FRESH WATER					79454		294.9

Figure 7-4. Maximum permissible unit deck loads in cargo spaces

(2) If the 200 tons were placed in the forward end of the hold, the correction figures directly under that location should be used. The change in draft can be determined in the same manner as in (1) above.

NOTE: Personnel take trim factors directly under the center of the hold or compartment in which cargo is stowed.

c. To maintain the proper trim during loading, personnel should check the forward and aft drafts periodically.

Downloaded from http://www.everyspec.com

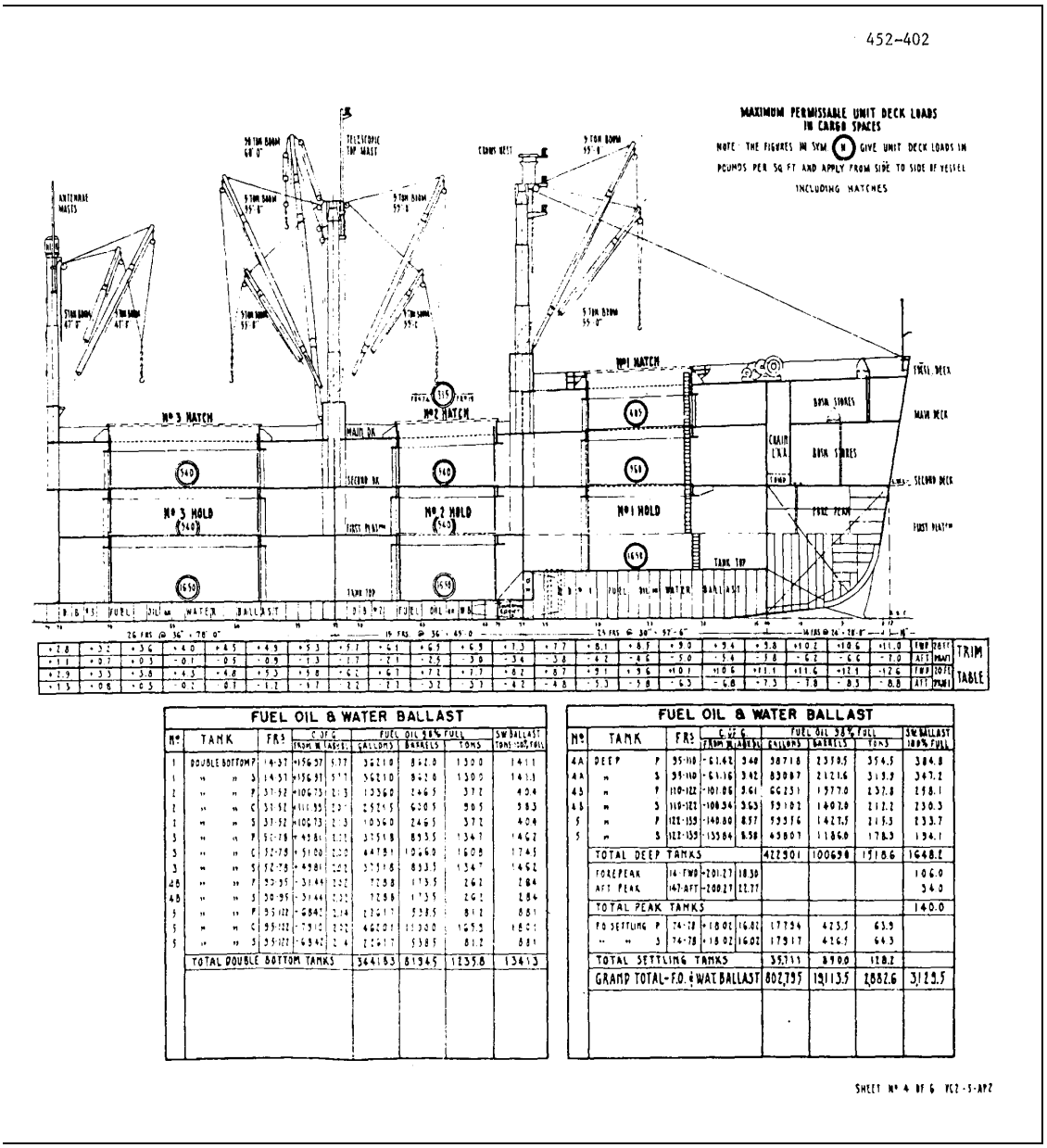

Figure 7-4. Maximum permissible unit deck loads in cargo spaces (continued)

Section II. Steps in Prestow Planning

Downloaded from http://www.everyspec.com

7-9. OVERALL CARGO LOAD PLANNING. Once the cargo planner is notified that a vessel is to be loaded, he begins to formulate a plan for loading the vessel. A prestowage plan is never firm, and it is frequently necessary to change it. However, having a prestowage plan helps expedite cargo loading and helps ensure maximum use of the vessel's dead weight carrying capacity. Planning for the vessel loading is listed below.

a. **Obtaining Vessel Characteristics.** Apply the procedures below to obtain vessel characteristics.

(1) When preparing the cargo loading plan the cargo planner first obtains the following information pertinent to the particular cargo vessel to be loaded:

(a) Type of vessel: Victory Ship, design VC2-S-AP2.

(b) Number of hatches: five.

(c) Capacity and location of cargo booms: 5-ton—all hatches, 30-ton—number 4 hatch, 50-ton—number 3 hatch.

(d) Bale cubic capacity: 456,525 cubic feet.

(e) Dead weight tonnage: 10,805 LTONs.

NOTE: Cargo planners must be familiar with the discharge capabilities of all the ports of discharge at which cargo must be loaded and unloaded.

(f) Weight of fuel, water, stores, dunnage, and so forth: 2,380 LTONs.

(g) Cargo dead weight tonnage (vessel dead weight less fuel, stores, and so forth): 8,425 LTONs (see paragraph 7-6 for detailed computation).

(h) Estimated deck cargo space: 8,000 square feet (approximate).

(i) Seasonal load draft: summer saltwater-28 feet 6 3/4 inches.

(2) The foregoing information can be obtained from three sources:

(a) Stowage and Capacity Booklets, published by the US Maritime Commission for the particular designs involved (see paragraph 7-5).

(b) The local MSC representative.

(c) The vessel itself.

b. **Using Cargo Data.** Table 7-1, page 7-14 shows a typical cargo list for a Victory vessel which provides data to be compared with vessel capacity data. The following is a comparison of the below-deck vessel capacities listed in (d) through (i) above with the total cargo being stowed below deck, as presented in Table 7-1.

Downloaded from http://www.everyspec.com

	Long tons	Cubic feet
Vessel capacity	8,425	456,525
Allowance for broken stowage	____	-45,652
Below-deck capacity	8,425	410,873
Cargo allocated for loading below deck	-7,074	-410,022
Below-deck capacity not used	1,351	851

c. **Determining VSF.** The VSF is determined by dividing the bale cubic capacity of the vessel (456,525 cubic feet) by the weight of the cargo to be loaded below deck (7,074 LTONs), which in this case gives a VSF of 64.5. The VSF used to distribute weight below deck would be VSF 65 (paragraph 7-7a).

d. **Making Initial Cargo Allocation.** Cargo in LTONs is initially allocated to compartments below deck by dividing the cubic capacity of each compartment by the VSF as shown in Table 7-2, page 7-15. The example of a weight distribution plan in Figure 7-5, page 7-16 shows where cargo tonnages are allocated. In this example, the plan is to place nine 3/4-ton trucks (24 loaded trim (L/T)) in hatch number 2, nine 3/4-ton trucks (24 L/T) in hatch number 5, eight 2 1/2-ton trucks (49 L/T) in hatch number 3, and eight 2 1/2-ton trucks (49 L/T) in hatch number 4.

e. **Determining the Vessel's Trim.** To ensure that the distribution of weight as indicated in Figure 7-5 will give the proper drag, planners use a trim table to estimate the loaded trim. Table 7-3, page 7-16 shows an example of a portion of a trim table. The method used here for estimating trim assumes that all fuel, water, and stores necessary for this voyage are on board when the vessel arrives. The arrival draft is 9 feet forward and 18 feet 8 inches aft. If additional fuel, water, and stores are required before sailing, their weight and location should be included when estimating the loaded trim. (See paragraph 7-8.)

f. **Preparing a Prestowage Plan.** Cargo handlers must prepare a plan showing where the cargo will be loaded. Figure 7-6, page 7-17 shows an example of a completed prestowage plan. This prestowage plan (also called the loading plan) is tentative and will be changed several times before or during actual loading. The prestowage plan must be prepared before any cargo is loaded. It should show cargo distributed throughout the cargo compartments in a manner which prevents undue strain on any portion of the vessel. Cargo handlers should stow cargo so that the vessel will be stable and correctly trimmed. The prestowage plan provides a basis for scheduling the arrival of cargo shipside according to priority and for estimating requirements for cargo-handling equipment.

Downloaded from http://www.everyspec.com

Table 7-1. Cargo list

Amount	Supply class	Commodity	Weight (long tons)	Cubic feet	Cargo stowage factor	Measurement tons
Below deck Cargo						
28, 846 cases	CL I	C rations	666	40,961	62	1,024
6,996 cases	CL I	Powdered eggs	147	12,594	86	314.9
950 bags	CL I	Flour	64	3,006	47	75.1
3,816 drums	CL III	Diesel fuel	922	45,472	49	1,136.8
1,300 pallets	CL I	Palletized subsistence	1,508	90,980	60	2,274.5
11,628 cases	CL II	Clothing	223	29,070	130	726.8
3,212 pieces	CL IV	Steel plate	1,050	10,480	10	262
8 each	CL VII	Trk, cargo, 2 1/2-ton, M35A2 WWN	49	9,878	201	246.9
8 each	CL VII	Tk, M60A1	349	26,954	77	673.7
1,500 boxes	CL IX	Repair parts	417	22,285	53	557.1
5,000 boxes	CL II	Publications and forms	307	17,806	58	445.2
5,000 boxes	CL VIII	Miscellaneous supplies	320	26,880	84	672
300 boxes	CL IX	Marine repair parts	270	26,250	97	656.3
1,800 boxes	CL II	Miscellaneous supplies	180	7,500	42	187.5
110 crates	AF	Aircraft parts	87	10,700	123	267.5
20,376 cases	CL VI	Beer	373	20,376	55	509.4
525 boxes	NAVY	General cargo	145	8,830	61	220.8
Total cargo below deck			7,074	410,022	58	10,250.5
Deck cargo						
16 each	CL VII	Trk, cargo, 2 1/2-ton, 6X6, M34	98	19,756	201	493.9
18 each	CL VII	Trk, cargo, 3/4-ton, M37B1 WWN	40	9,628	200	240.7
Total deck cargo			138	29,384		734.6
Total cargo			7,212	439,406		10,985.1

(1) ***Analysis of cargo.*** Of the commodities listed in Table 7-1, the types requiring special attention are listed below.

(a) *Heavy lifts.* This cargo consists of 8 M60A1 tanks (43.5 LTONs each), and 24 M3582 2 1/2-ton, 6x6 cargo trucks (6.1 LTONs each). A 50-ton jumbo boom located forward at batch number 3 can handle the tanks. Since the two sets of 5-ton booms located forward and aft at hatches 3 and 4 can be double rigged, the trucks can be handled at these hatches without the jumbo booms.

(b) *Weight cargo or bottom cargo.* This cargo is suitable for bottom stowage in the lower holds or between decks. As a rule, the stowage factor of weight cargo is

Downloaded from http://www.everyspec.com

lower than the VSF. The items and respective dimensions listed below are examples of weight cargo.

	Long tons	Cubic feet	Cargo stowage factor
Steel plates	1,050	10,480	10
Diesel fuel	922	45,472	49
Miscellaneous supplies	180	7,500	42
Repair parts	417	22,285	53
Palletized subsistence	1,508	90,980	60

(c) *Filler cargo*. Filler cargo is normally used to prevent or help reduce broken stowage during transport. It consists of small durable packages or pieces of cargo that may be stowed in the spaces between larger pieces. Filler is also the term applied to small cargo used to reduce the space above larger packages where headroom is restricted or where space is irregular and limited. Small packages used to fill the space between larger pieces must not be subjected to undue pressure, dragging, or possible damage. Dunnage and blocking material should be used to prevent this type of damage. Examples of filler cargo could include rubber tires, roofing paper, baled clothing, and items of this nature.

Table 7-2. Weight distribution

Hold	Cargo compartments	Capacities (cubic feet)[1]	Vessel stowage factor	Tons allocated
No. 1	Forecastle deck	22,045	64.5	339
	Tween deck	23,785	64.5	369
	Lower deck	27,910	64.5	431
No. 2	Upper tween deck	27,010	64.5	417
	Tween deck	21,805	64.5	337
	Lower hold	27,945	64.5	431
No. 3	Upper tween deck	45,555	64.5	700
	Tween deck	37,795	64.5	589
	Lower hold	52,840	64.5	844
No. 4	Tween deck	49,200	64.5	699
	Lower hold	51,100	64.5	838
No. 5	Tween deck	43,630	64.5	674
	Lower hold	25,905	64.5	406
Total		456,525		7,074

[1] The capacities of the various compartments are found in the capacity tables for the particular vessel being loaded.

Downloaded from http://www.everyspec.com

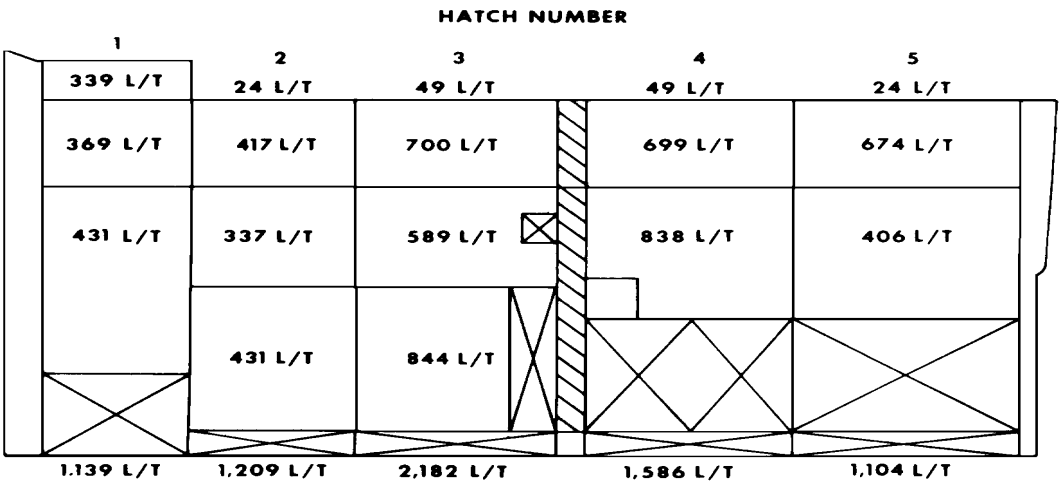

Figure 7-5. Weight distribution plan

Table 7-3. Estimating trim (20-foot table)

	Tonnage(long tons)	Immersion per 100long tons (scale from fig 2-21):	Forward action (inches) (+) (-)	Aft reaction (inches) (+) (-)
Hold 1	1,144 x	forward (inches) +9.6 109.8 aft inches) -5.8		66.3
Hold 2	1,214 x	+7.2 87.4 -3.2		38.8
Hold 3	2,160 x	+4.3 92.8 -0.2		4.3
Hold 4	1,604 x	-2.5 +6.9	40.1 110.6	
Hold 5	1,101 x	-5.9 +6.9	64.9 114.5	
			Total + 290.0 – 105.0 + 225.1 – 109.4	
290.0 in – 105.0 = 185.0 in (15 ft 5 in) forward immersion 225.1 in – 109.4 in = 115.7 in (9 ft 8 in) aft immersion				

	Draft
Arrival	9 ft forward, 18 ft 8 in aft, 13 ft 10 in mean (from fig 2-23)
Immersion	15 ft 5 in forward, 9 ft 8 in aft
Sailing	24 ft 5 in forward, 28 ft 4 in aft, 26 ft 5 in mean
Drag on sailing	3 ft 11 in

Downloaded from http://www.everyspec.com

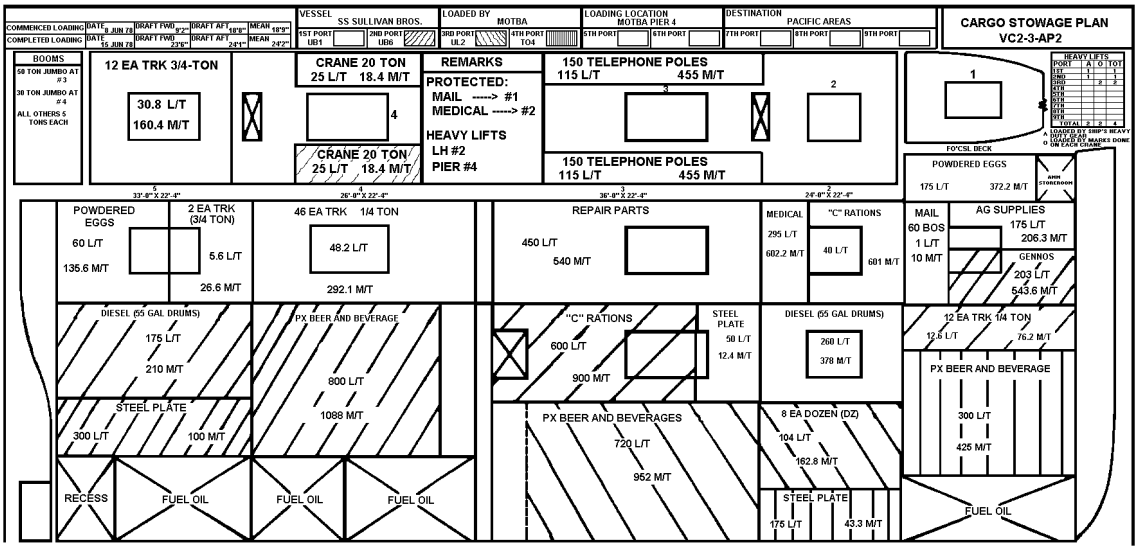

5	L/T	M/T
1ST PORT	96.4	322.6
2ND PORT	475	310
3RD PORT		
4TH PORT		
5TH PORT		
TOTAL	571.4	632.6

4	L/T	M/T
1ST PORT	73.2	310.5
2ND PORT	825	1106.4
3RD PORT		
4TH PORT		
5TH PORT		
TOTAL	898.2	1416.9

3	L/T	M/T
1ST PORT	730	1462.4
2ND PORT	600	900
3RD PORT	720	952
4TH PORT		
5TH PORT		
TOTAL	2050	3314.4

2	L/T	M/T
1ST PORT	595	1040.3
2ND PORT		
3RD PORT	104	162.8
4TH PORT	175	43.3
5TH PORT		
TOTAL	874	1246.4

1	L/T	M/T
1ST PORT	351	588.5
2ND PORT	215.6	619.8
3RD PORT		
4TH PORT	300	425
5TH PORT		
TOTAL	866.6	1633.3

GRAND TOTAL	L/T	M/T
1ST PORT	1845.6	3724.3
2ND PORT	2115.6	2936.2
3RD PORT	824	1114.8
4TH PORT	475	468.3
5TH PORT		
TOTAL	5260.2	8243.6

GRAND TOTALS

Figure 7-6. Cargo prestowage plan

(2) ***Specific allocation of cargo.*** Using the data found in a weight distribution plan and the cubic capacities of the compartments, personnel can allocate cargo to specific compartments according the guidelines listed below.

(a) Deduct allowance for broken stowage from each compartment. In the example in Figure 7-5, 10 percent is used.

(b) Allocate cargo by weight and cubic capacity to ensure that maximum space is used.

(c) When possible, stow like items together to reduce delay in discharging and error in checking.

(d) Place heavy lifts within reach of the heavy lift or jumbo booms, except when the discharging port will furnish equipment for discharging heavy lifts.

(e) Keep items of other services (Navy, Air Force) together if possible.

(f) Stow items requiring special handling such as mail, post exchange, or security cargo, in a safe place.

(g) Personnel must not exceed the weight limitations per square foot.

Downloaded from http://www.everyspec.com

(3) ***Compartment stowage factor.*** In Table 7- 1, cargo was allocated to each compartment using the VSF (65). This factor does not make an allowance for broken stowage; the CSF is used for this purpose. To find the CSF, the allowance for broken stowage (10 percent in this example) is subtracted from the cubic volume of each compartment and the difference divided by the weight allocated to it (Table 7-2). Another method is to deduct 10 percent from the VSF, which in this case produces a compartment stowage factor of 58.

(a) In loading general cargo, the cargo stowage factors will differ widely, and personnel will need to load more than one commodity in a compartment to obtain the proper ratio between weight and space. Heavy lift cargo should be placed in a location where the jumbo boom can be used. The weight, or bottom cargo, should then be distributed in the hold of the vessel.

(b) The cargo stowage factor is used to allocate general cargo to compartments. To determine the space required to load several commodities in one compartment, cargo handlers should multiply the weight in tons of each commodity by its stowage factor.

(c) If there is still space in the compartment for additional cargo, cargo planners may use the "topping-off formula" to fill the unused space. This formula is used with two commodities. One commodity has a larger and one commodity has a smaller stowage factor than that of the space to be filled. The number of long tons of the less dense commodity to be stowed (the commodity having the higher stowage factor) is determined from the formula below.

$$X = \frac{V - AT}{B \quad A}$$

where:

X = long tons of the less dense commodity to be stowed
V = net cubic capacity of the space to be filled (considering broken stowage)
A = stowage factor of the denser commodity
T = tonnage allocated to the space to be filled
B = stowage factor of the less dense commodity

For example, if:

V = 22,030 cubic feet
A = 30
T = 475 LTONs
B = 55

then:

$$\frac{22{,}030 - 30(475) = 22{,}030 - 14{,}250 = 7{,}780}{55 - 30 \qquad 25 \qquad 25}$$

= 311 LTONs of the less dense commodity

The remaining space will be filled with 164 LTONs of the denser commodity.

Downloaded from http://www.everyspec.com

(4) ***Adjusted trim.*** The weights shown in Figure 7-6 do not coincide with the weights shown in Figure 7-5 because of the physical characteristics of the cargo. Using the trim table (Figure 7-4) and the estimated trim table (Table 7-3), the drag is adjusted to reflect the new distribution of weight. In this case, the drag is decreased by 1 inch; it is now 3 feet 10 inches.

(5) ***Cubic capacity maximization.*** When allocating cargo to ensure maximum use of the cubic capacity of the compartment, cargo handlers must consider the size of the cargo, the size of the hatches, and the overhead clearance. This is illustrated by an analysis of number 4 hold in Figure 7-6. The cargo planner allocated enough steel plates and C rations to build a level floor of cargo 3 feet 6 inches high. The planner allowed 4 additional inches for dunnage and stowed the eight cargo trucks on top of this floor, putting four trucks in the aft end of the hatch and two in each wing. The trucks were secured, and baled clothing was stowed in the trucks. Bulkheads were then built on the inboard sides of the trucks in the wings and forward of the trucks in the aft end. General supplies were stowed in the remaining space on top of the dunnage and topped off with the remainder of the baled clothing. Number 4 hold has 10 feet 10 inches clearance, 3 feet 6 inches of cargo, and 4 inches of dunnage, pus 6 feet 10 inches of cargo; uses 10 feet 8 inches of this clearance; and makes maximum use of the cubic capacity of the compartment.

NOTE: Data and capacities cited and assumptions made in this paragraph are for a standard five-hatch Victory ship.

7-10. DELIVERING CARGO TO SHIPSIDE. Efficient pier operation requires the continuous movement of cargo. Bottlenecks created by wharves filled to capacity or badly congested with loaded vehicles seriously retard the loading of vessels and reduce port efficiency. In most instances, poor prior planning is the reason for this problem.

a. Cargo is normally delivered to the port by railroad cars, lighters, and trucks. Heavy-lift cargo is scheduled for delivery at a specified time and place to effectively coordinate the use of heavy lift gear.

b. After the date and hour have been determined for the vessel to start loading, the bottom cargo is called forward before the vessel is ready to start loading. Filler cargo is also assembled on the pier to be used as needed.

7-11. FACILITY REQUIREMENTS (T-AKR 295/296 CLASS SHIPS). Determining pier requirements such as the required staging area, vehicle traffic patterns, and pier capacities (length, water depth, etc.) in relation to the ship's external ramp and crane configurations is of utmost importance. The size and capabilities of the T-AKR 295/296 Class ships require that when selecting a SPOE or SPOD, it is necessary to consider whether: 1) the ship can negotiate the appropriate channels or basins, 2) the pier side depth can accommodate a fully loaded ship considering the tidal variations, 3) the pier is long and strong enough for maximum simultaneous cargo operations, and 4) vehicle staging areas are available. Also consideration as to the availability of pier side services such as cranes should be investigated. Generally, the use of pier cranes is faster and more efficient than the ship's crane.

7-12. LOADING TIME. Port speed in handling break-bulk cargo varies as much as 25 to 30 percent. Within ports themselves one section may perform as much as 20 percent more efficiently

Downloaded from http://www.everyspec.com

than another. Personnel must be familiar with the labor productivity in a locality to estimate loading time accurately.

a. If cargo were equally distributed in each hold, and tons handled per hour for all commodities were constant, estimating the working time would be relatively easy and accurate. However, these ideal conditions do not exist.

(1) The standard five-hatch Victory vessel in this example has the following weight distribution in LTONs:

Hatch Number l	1,139
Hatch Number 2	1,209
Hatch Number 3	2,182
Hatch Number 4	1,586
Hatch Number 5	1,104

(2) Since the rate of loading varies with each commodity, cargo handlers must know rates at a particular port before they can accurately predict loading time. To determine the time required to load the vessel in this example, the loading rates in Table 7-4 are used. These rates are used only to illustrate one method of estimating loading time. Loading rates can be used to estimate loading time for each commodity as listed below.

$$\frac{\text{LTONs of cargo to be loaded in a hatch}}{\text{hourly loading rate}}$$

= hours required for loading x 60 minutes

= total minutes required for loading

Example (information from Table 7-4, and Table 7-5, pages 7-22 through 7-24, number 1 hatch):

$$\frac{\text{373 LTONs of beer}}{\text{LTONs per hour}} = 18.65 \text{ hours x 60 minutes}$$

= 1,119 minutes required for loading (18 hrs 39 min)

b. Cargo handlers should consider the factors below:

- Time required for rigging and rerigging.
- Time required for handling dunnage.
- Time required for blocking and lashing.
- Time required for opening and closing hatches.
- Time required for shifting the vessel or lighters (if necessary).

c. Using the loading rates in Table 7-4, cargo handlers can calculate the loading time as shown in Table 7-5, and Table 7-6, page 7-24.

Downloaded from http://www.everyspec.com

Table 7-4. Loading rates

Commodity	Long tons per hatch season hour
Tanks, M60A1	90
Trucks, 3/4-ton	25
Trucks, 2 1/2-ton	25
General cargo	15
C rations	20
Beer	20
Palletized subsistence	25
Steel plate	10
Powdered eggs	10
Baled clothing	9
Drummed fuel oil	20
Flour	20

d. Cargo handlers can make certain conclusions based on the results of the calculations. Hold number 2 will be the long hatch because it required more hours to complete than the others. Hold number 4 will be the short hatch. Labor gangs can be scheduled so that all hatches will be completed at about the same time. Supervisors should make constant checks during loading to prevent delays and to ensure that the planned tonnages are actually being loaded.

e. The times given in Tables 7-5 and 7-6 apply to the time required to load the vessel. Delays caused by equipment breakdown, foul weather conditions, and failure of cargo to arrive as scheduled should be added to the predicted loading time. If the hatches must be closed and opened again between shifts, the estimated time must be increased accordingly.

7-13. CARGO LOADING ORDER (T-AKR 295/296 CLASS SHIPS). Load sequence is determined by the cargo flowpath, deck configuration, cargo makeup, and which external ramp is assigned to the cargo hold. The prestow plan will dictate the cargo load priority. Efficient loading is based on careful planning of the loadout operation. All RO/RO stowage areas of the T-AKR 295/296 Class ships can be reached from either of the two sideport ramps or from the stern ramp. Maximum cargo flow is achieved by using both the stern ramp and one sideport ramp to access the two established, non-intersecting, cargo flowpaths throughout the ship. This includes dividing RO/RO cargo into separate cargo staging areas based on the external loading ramp used to enter the ship. The T-AKR 295/296 Class ships are designed to allow simultaneous loading of the upper and lower decks without interference along the cargo flowpaths.

LO/LO cargo should be staged in its own area, separate from RO/RO cargo, and should be separated by which crane resource will load it. Likewise, cargo within each staging area should be grouped according to its final stow location (deck and hold). This should be possible due to the specific assignment of cargo holds to a particular external loading ramp and crane resource.

Downloaded from http://www.everyspec.com

Table 7-5. Estimating loading time—initial calculations

Cargo or operation	Minutes
No. 1 hatch (one hatch section)	
Rigging and opening (forecastle deck, tween deck, and lower hold)	100
Handling dunnage	30
Loading 373 long tons of beer	1,119
Loading 58 long tons of powdered eggs	348
Closing lower hold, preparing tween deck	45
Loading 98 long tons of general cargo	392
Loading 133 long tons of palletized subsistence	319
Loading 89 long tons of powdered eggs	534
Loading 49 long tons of flour	147
Closing tween deck, preparing forecastle deck	45
Loading 339 long tons of general cargo	1,356
Handling dunnage throughout loading	60
Closing forecastle deck, swinging in gear, and placing tarpaulin on hatch	30
Total	4,525
or	
$\frac{4,525}{60}$ = 75 hours 25 minutes	
No. 2 hatch (one hatch section)	
Rigging and opening (upper tween deck, tween deck, and lower hold)	100
Handling dunnage	30
Loading 140 long tons of steel plate	840
Loading 94 long tons of diesel fuel	282
Loading 197 long tons of general cargo	788
Closing lower hold, preparing tween deck	45
Loading 250 long tons of diesel fuel	750
Loading 87 long tons of general cargo	348
Closing tween deck, preparing upper tween deck	45
Loading 175 long tons of general cargo	700
Loading 199 long tons of palletized subsistence	478
Loading 43 long tons of C rations	129
Handling dunnage throughout loading	60
Closing upper tween deck, preparing deck for deck cargo	45
Loading 24 long tons of 3/4-ton trucks	58
Blocking, lashing, and swinging in gear	90
Total	4,788
or	
$\frac{4,778}{60}$ = 79 hours 48 minutes	

Downloaded from http://www.everyspec.com

Table 7-5. Estimating loading time— initial calculations (continued)

Cargo or operation	Minutes
No. 3 hatch (two hatch section)	
Rigging and opening (upper tween deck, tween deck, and lower hold)	85
Handling dunnage	30
Loading 325 long tons of steel plate	975
Rigging jumbo boom	40
Loading 349 long tons of tanks	233
Securing jumbo boom, rigging ordinary booms, and securing tanks	260
Loading 70 long tons of general cargo	140
Loading 100 long tons of baled clothing	333
Closing lower hold, preparing tween deck	45
Loading 25 long tons of steel plate	75
Loading 325 long tons of palletized subsistence	390
Loading 15 long tons of flour and 224 long tons of C rations	359
Closing tween deck, preparing upper tween deck	45
Loading 210 long tons of general cargo	420
Loading 440 long tons of palletized subsistence	528
Loading 50 long tons of C rations	80
Closing upper tween deck, preparing deck for deck cargo, rigging booms (block in bight)	60
Handling dunnage throughout loading	30
Loading 49 long tons of 2 1/2-ton trucks	118
Blocking, lashing, and swinging in gear	120
Total	4,366
or $\frac{4,366}{60}$ = 72 hours 46 minutes	
No. 4 hatch (two hatch section)	
Rigging and opening (tween deck and lower hold)	80
Handling dunnage	30
Loading 385 long tons of steel plate	1,155
Loading 275 long tons of C rations	413
Loading 32 long tons of general cargo	64
Rigging booms (block in bight)	30
Loading 49 long tons of 2 1/2-ton trucks	118
Rerigging, blocking and lashing trucks, constructing and placing bulkheads	200
Loading 97 long tons of baled clothing	323
Closing lower hold, preparing tween deck	45
Loading 136 long tons of general cargo	272
Loading 411 long tons of palletized subsistence	493
Loading 55 long tons of general cargo	110
Loading 26 long tons of baled clothing	87
Loading 71 long tons of C rations	107
Closing upper tween deck, preparing deck for deck cargo, rigging booms (block in bight)	60
Handling dunnage throughout loading	30
Loading 49 long tons of 2 1/2-ton trucks	118
Blocking, lashing, and swinging in booms	129
Total	3,855
or $\frac{3,855}{60}$ =64 hours 15 minutes	

Downloaded from http://www.everyspec.com

Table 7-5. Estimating loading time—initial calculations (continued)

Cargo or operation	Minutes
No. 5 hatch (one hatch section)	
Rigging and opening (tween deck and lower hold)	80
Handling dunnage	30
Loading 175 long tons of steel plate	1,050
Loading 84 long tons of diesel fuel	252
Loading 147 long tons of general cargo	588
Closing lower hold, preparing tween deck	45
Loading 494 long tons of diesel fuel	1,482
Loading 180 long tons of general cargo	720
Closing tween deck, preparing deck for deck cargo	45
Handling dunnage throughout loading	60
Loading 24 long tons of 3/4-ton trucks	58
Blocking, lashing, and swinging in gear	90
Total	4,500
or	
$\frac{4{,}500}{60} = 75$ hours	

Table 7-6. Estimating loading time—final calculations

Hatch	Total hours required	Gang hours required	Average long tons per hatch hour	Average long tons per gang hour
1	75 hr 25 min	75	15	15
2	79 hr 48 min	80	15.1	15.1
3	72 hr 46 min	146	29.6	14.8
4	64 hr 15 min	128	24.7	12.35
5	75 hr	75	14.7	14.7
Total	367 hr 14 min	504	19.8	14.4

7-14. FINAL STOWAGE PLAN. After the vessel has been loaded, a final stowage plan is prepared showing the actual location of the cargo on the ship. Theoretically, the final stowage plan should agree with the prestowage plan, but this is seldom the case.

Section III. Cargo Stowage Plan

7-15. CONVENTIONAL CARGO VESSELS. Conventional cargo vessels are constructed with several hatch openings on the weather deck into the holds below. In the deck arrangement of a conventional cargo ship, cargo is lowered through the main deck hatch opening into one of the

Downloaded from http://www.everyspec.com

between deck levels in the hold. It is landed in the hatch square and moved forward, aft, or into the wings by machine or by hand, where it is stowed. The hatches are numbered in order from bow to stern and the various deck levels are normally designated as upper tween deck, lower tween deck, and hold.

7-16. BREAK-BULK VESSEL STOWAGE PLANS. The break-bulk vessel cargo stowage plan is a complete diagram of a vessel's cargo space showing the location (both on and below deck) of all cargo aboard ship.

a. **General.** The stowage plan looks like a vessel when viewed from the side. It contains information about cargo stowed in the vessel's hold, tween decks, and forecastle deck. The cargo shown in the tween decks is shown from the birds-eye view. The square of the hatch is drawn in so that you can see down in the square of the hatch and can get down to the lower tween deck in hold number 3. Only the lower hold is shown from the side or profile view. The cargo stowage plan is prepared by the loading terminal after the ship has been loaded and is used to facilitate the subsequent loading and discharge of cargo at all ports along the voyage. The cargo stowage plan contains—

- A summary of cargo to be discharged at each port.
- A summary and location of heavy lifts.
- Information on the capacity and location of heavy lifts.
- Information on the capacity and location of the ship's boom.
- General information such as the location of special items of cargo (protected, controlled, sensitive, mail, high-value, and so forth).

Ships vary in their size and hatch configuration. Some ships have anywhere from five to seven hatches. Some hatches are two levels and some are four levels deep. Not all ships are built the same way; some have the superstructure closest to the bow, some have it in the center, and some have it at the stern. However, the stowage plan for any given ship can be interpreted in the same basic manner. Before discharge operations begin, personnel must be familiar with the cargo aboard ship. To read a cargo stowage plan, personnel must know where to locate information on the plan relating to the loading and discharge of the cargo (ship's data), boom and hatch configuration (deck data) and stowage location (hold data). Figure 7-7, page 7-27 shows a cargo stowage plan and the next few paragraphs explain the information included in the plan.

b. **Ship's Data.** The ship's data section of the stowage plan generally runs across the top of the form and contains information on the loading and discharge of cargo. It includes the following information:

(1) ***Loading dates.*** This section of the cargo stowage plan contains the date that loading started (commenced loading) and the date the vessel was finally loaded (completed loading). The dates of loading give an idea of the time that it took to load the vessel, and this information can be used for planning purposes in the event the vessel has to be backloaded (see callout of Figure 7-7).

(2) ***Draft measurements.*** Draft measurements are given at forward and aft points as well as the mean (average) draft of the vessel. (Drafts are expressed in feet and inches.) The cargo stowage plan provides space for recording the vessel's draft before and after loading.

Downloaded from http://www.everyspec.com

Mean draft measurements are important when selecting a berth for loading or discharging operations (see callout of Figure 7-7).

(3) ***Vessel.*** This block on the cargo stowage plan contains the name of the ship (see Figure 7-7).

(4) ***Loaded by.*** This space contains the name of the loading port. On the stowage plan in Figure 7-7, the abbreviation MOTBA stands for Military Ocean Terminal, Bay Area. It is always important to know who loaded the cargo because shortages, damaged cargo, and missing cargo items must be reconciled with the loading port in your cargo outturn report.

(5) ***Loading location.*** The port of pier within the loading port is entered in this block.

(6) ***Destination.*** This space shows the final cargo discharge port of the voyage. The vessel may make several stops on its way to this destination. In this example the final destination is Osaka, Japan.

(7) ***Port of discharge codes.*** On the second line of stowage plan, beneath the vessel block, is the port of discharge codes. These codes identify water ports used in the worldwide transportation of DOD material. The port of discharge code is a three digit code that identifies the port. In Figure 7-7 the 1st port's code is UB1 which means that all the cargo with that destination will discharge at Pusan, Korea. The 3d and last port of discharge is UL2 which, as in the destination block, stands for Osaka, Japan. (Port of discharge code information can be obtained from DOD Reg 4500.32R Vol l). The remaining spaces for ports of discharge are blank in our example because the 3d port code spaces (4th, 5th, 6th, and so on) could also be used to identify special cargo loaded at one of the three original ports of discharge. Each port of discharge code has a distinct marking. The markings show in a glance where the cargo is placed throughout the vessel. The first port's cargo is usually unmarked. In the sample stowage plan in Figure 7-7 some of the cargo are marked with horizontal lines, some with diagonal lines, and some are not marked at all.

c. **Deck Data.** The next part of the vessel stowage plan looks like the top of a vessel when viewed from above; it is called a birds-eye view. It contains information about cargo stowed on the vessel's main deck, specifies the type of standard and heavy-lift gear of the vessel, and identifies any special cargo that may be towed in the vessel's security locker.

(1) ***On-deck cargo stowage.*** The rectangles on either side of the hatch square show cargo on the main (weather) deck of the vessel. In Figure 7-7, hatch 5 has four 3/4-ton trucks stowed on the port side and four 3/4-ton trucks stowed on the starboard side. Large pieces of cargo such as trucks and cranes can be stowed on deck so long as they are properly secured. Cargo is on deck, not on the square of the hatch. Personnel could open the hatch and discharge all cargo without having to move the trucks or cranes. Notice also that four of the 3/4-ton trucks come off at the 1st port and four cranes come off at the 3d port.

NOTE: The tonnage indicated in the rectangles is the total tonnage. The four 3/4-ton vehicles, for example, weigh 10.1 long tons total. So one 3/4 weighs about 2.5 long tons.

Downloaded from http://www.everyspec.com

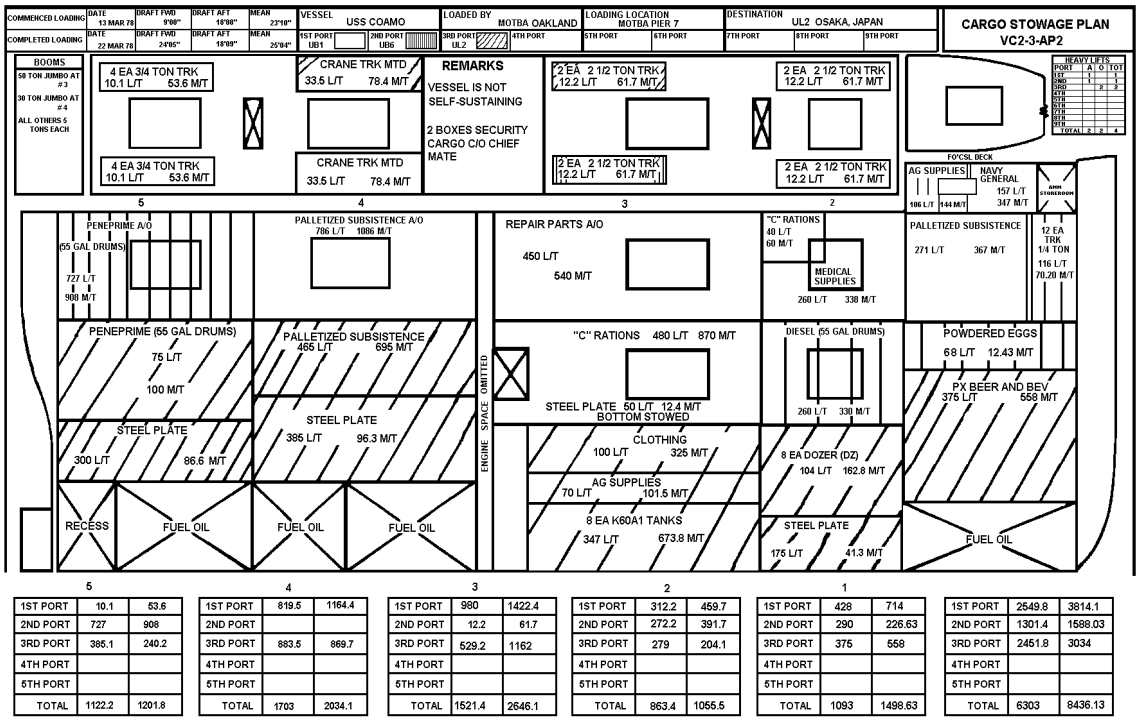

Figure 7-7. Cargo stowage plan

(2) ***Booms.*** This block shows the lifting capacity of the jumbo booms and their location. It also states the capacity of the standard cargo booms. A 50-ton jumbo boom is located at hatch 3 and a 30-ton jumbo boom at hatch 4, and the remaining booms throughout the vessel are 5-ton booms. This information will be useful in locating the heavy lifts and in determining whether the vessel is self-sustaining or not. (Self-sustaining means that the vessel can discharge all cargo using its own booms.)

NOTE: The cargo stowage plan shows that the vessel has a 35-ton crane aboard, but the booms block on the stowage plan shows that the vessel only has a 30-ton jumbo boom. The vessel could not discharge the crane. A BD or other heavy-lift derrick would have to be available at the port when such a vessel is discharged at your port.

(3) ***Remarks.*** The remarks section includes information on any security cargo aboard, whether the ship is self-sustaining, and anything that would be of assistance in preplanning a discharge operation. In the example in Figure 7-7, the vessel is not self-sustaining; therefore, it will require special equipment to handle the heavy lifts.

(4) ***Heavy-lifts summary.*** The heavy-lifts summary identifies the number of heavy lifts to be discharged at each port. Figure 7-7 shows that 1st port will have 3, 2d port 4, and 3d port 19. A heavy lift is any single piece of cargo that exceeds the safe working capacity of the boom that is available to lift it. The heavy-lift summary helps you to plan the discharge of heavy lifts.

Downloaded from http://www.everyspec.com

d. **Hatch Data.** The stowage plan gives descriptions and weight of cargo by hatch, level, and commodity. The weight of cargo is always expressed in LTONs, and the cube is expressed in MTONs. Hatch 5 in Figure 7-7 has only two levels—a lower hold and a between deck. There are 300 LTONs (86.6 MTONs) of steel plate stowed in the lower hold. These are going to 3d port. A "false floor" has been laid on top of the plate and 75 LTONs of Peneprime in 55-gallon drums was stowed on top of the floor (a false floor is simply a layer of boards placed over cargo). Notice that the Peneprime is also going to 3d port. In the between deck there is 727 LTONs of Peneprime but this cargo will come off at 2d port.

e. **Hatch Tonnage Summary.** The total weight and cube of cargo within a hatch including cargo stowed on deck is shown in the hatch tonnage summary blocks. There is one block for each hatch and, to the far right, a block which shows the ship totals. Each block shows the amount of cargo in that hatch to be discharged at each port.

f. **Reading the Cargo Stowage Plan.** Prior to the arrival of a vessel, cargo handlers will be given a cargo stowage plan to locate information pertaining to the discharge of cargo from the vessel. Reading the cargo stowage plan properly will help to conduct a smooth and efficient discharge operation.

(1) To locate cargo for the port of Osaka, Japan (UL2), which is 3d port in the example Figure 7-7, personnel should—

- Locate the code for that port at the top of the cargo stowage plan.
- Find the cargo with that code designation.
- Determine hatches to be unloaded. In Figure 7-7, cargo for Osaka is in hatches 1, 2, 5, and on deck at numbers 2 and 3.

(2) To identify heavy lifts, personnel should—

- Verify the number of heavy lifts to be discharged at Osaka (in the upper right-hand corner of the plan); there should be 19 lifts.
- Locate the hatches containing heavy lifts. On the plan, there is one heavy lift on deck hatch 4, two more on deck at hatch 3, eight more in the lower hold of hatch 3 and the remaining eight in the lower hold of hatch 2 (a crane, two 2 1/2-ton trucks, eight tanks and eight bulldozers).

(3) To identify cargo handling gear and its capabilities personnel should—

- Check for information pertaining to the port of discharge operation in the remarks section.
- Identify boom lifting capacity.
- Identify hatch cargo requirements.
- Identify hatches requiring special cargo-handling equipment.
- Order special cargo-handling equipment as necessary to assist in the discharge operation. Normally a crane would have to be ordered to handle the dozers in hatch 2 and two trucks on deck at hatch 3. Since hatch 3 has the lifting capability (60-ton jumbo), personnel can discharge the trucks with the ship's gear. The remarks block, however, says that the vessel is not self-sustaining. This could mean that the jumbo is inoperative. The eight tanks have a total weight

Downloaded from http://www.everyspec.com

of 347 LTONs, which means that each tank weighs about 43.3 LTONs. The jumbo is rated at 50 tons, but personnel must ensure its SWL before trying to discharge the tanks. (The SWL is stenciled on the side of the boom.)

g. **Maintaining the Cargo Stowage Plan.** During loading or discharging operations, personnel will receive instructions from higher headquarters in reference to the sequence of cargoes as well as other matters pertaining to the cargo operations. The ship's officer-in-charge will advise personnel of actions to take that will affect the stabilization of the ship as well as safety precautions to prevent accidents and/or damage to the gear. During loading and discharging operations, personnel will maintain an hourly tonnage report and keep the stowage plan current by indicating the amount of cargo handled (hourly) and the amount remaining to be loaded or discharged.

7-17. CONTAINER VESSEL STOWAGE PLAN. The primary use of containers in the modern Army is to enhance DOD strategic sealift capability to support the rapid deployment force. Modern container vessels can rapidly move supplies and equipment of combat units to the greater Middle East, NATO, and other commands worldwide. Reading and understanding a container vessel stowage plan is vital to a successful combat service support mission.

a. The stowage plan for a container vessel is different from one used for break-bulk cargo since only the container, not the cargo, is identified. On containerships, all loose cargo is packaged into containers and the container itself is loaded aboard a vessel. The stowage plan indicates where to find a particular container. To find cargo within a container, personnel must refer to the shipping documents (TCMDs). The cargo stowage plan tells where in the vessel the container is stowed.

b. The ship's configuration is basically the same for most containerships. They are constructed to handle containers of standard size. Although containers vary in size (20-, 35-, and 40-foot), today's container vessels can handle these containers with little alteration in the container-handling gear. Compartments designed to stow containers differ considerably from the compartment designed to stow general cargo. Container compartments do not have tween decks. Usually they do have two or three transverse (crosswise) hatches which serve one hold. The transverse row of container cells is referred to as a bay. A hatch on a container vessel is just the same as the hatch on a general cargo ship. It is the opening through which cargo may be loaded or unloaded. In most cases, there are two bays of containers per hold: the forward bay and the aft bay.

c. Three terms are important when discussing containers aboard ship. Containers are stacked vertically in cells; the transverse row of cells are referred to as bays; and each layer of containers is referred to as a tier (see Figure 7-8, page 7-30). A thorough knowledge of these terms will enable personnel to locate specific containers aboard a containership.

(1) Containers are vertically constructed with vertical guides (similar to an elevator shaft) within which the containers are stacked one above the other (see Figure 7-9, page 7-31). The number of containers in a single cell depends on the ship's depth. The bottom container takes the weight and force from those containers resting above it. The entire weight of the load is transmitted through corner posts on the containers to reinforced doubling plate on the tank top at the bottom of the hold. If stacking the containers more than the limit of six high in a cell, the loading terminal must provide movable supports off the vertical structure for the upper containers.

Downloaded from http://www.everyspec.com

Also, the terminal must always arrange container cells so that the long dimensions of the containers are fore and aft. The length of the cells varies from 20 feet to 40 feet, depending on the ship's design.

(2) A bay is a single transverse (crosswise) row of cells. For smaller holds, there may be only one bay. In larger holds, there may be two bays—the forward bay and the aft bay.

(3) Each horizontal layer of containers is a tier. The loading terminal numbers the tiers from the bottom of the hold upward including the containers on deck.

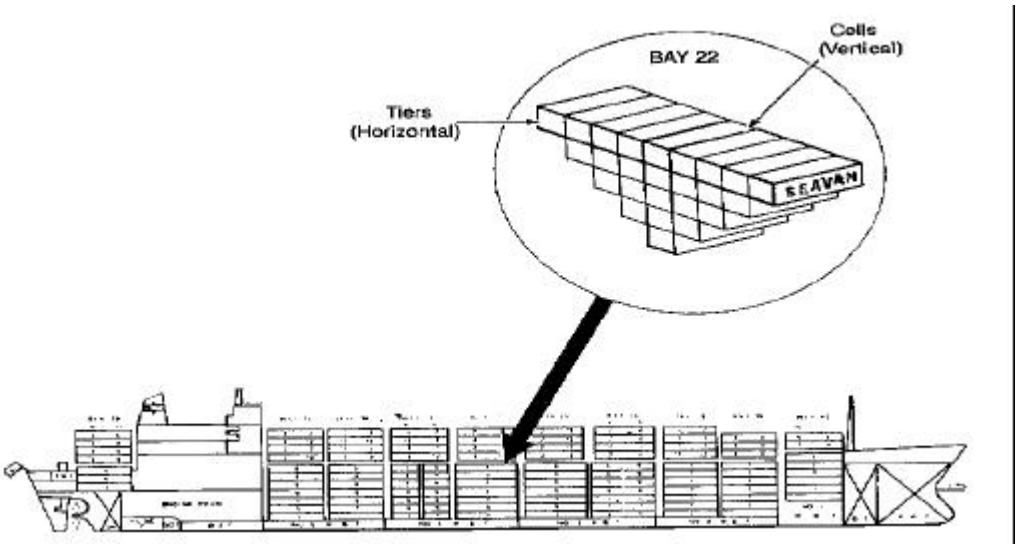

Figure 7-8. Example of cells, bays, and tiers

d. The designation of stowage locations used on container vessels is different from that for general cargo ships. The terms hold and tween deck, used for the general cargo ships, do not apply to containerships. The loading terminal can place two or more container lengths in a single hold of a containership permitting stowage of two 20-foot containers or one 40-foot container in a given opening. In containerships it is necessary to provide a precise stowage location for each container. The designation system for a containership is numerical.

(1) Each container is stowed in a given bay, in a given cell, in a certain tier. In containerships that carry only one size containers, bay numbers can run consecutively from bow to stern in numerical order. Ships that carry both 20-foot and 40-foot containers distinguish between the two sizes by the way the bays are numbered. The numbering system used by the various steamship lines varies considerably; therefore, the cargo planner must be familiar with the system used on each vessel. One numbering system adopted by some of the larger steamship lines provides not only a number for each stowage location, but also the size container being stowed.

Downloaded from http://www.everyspec.com

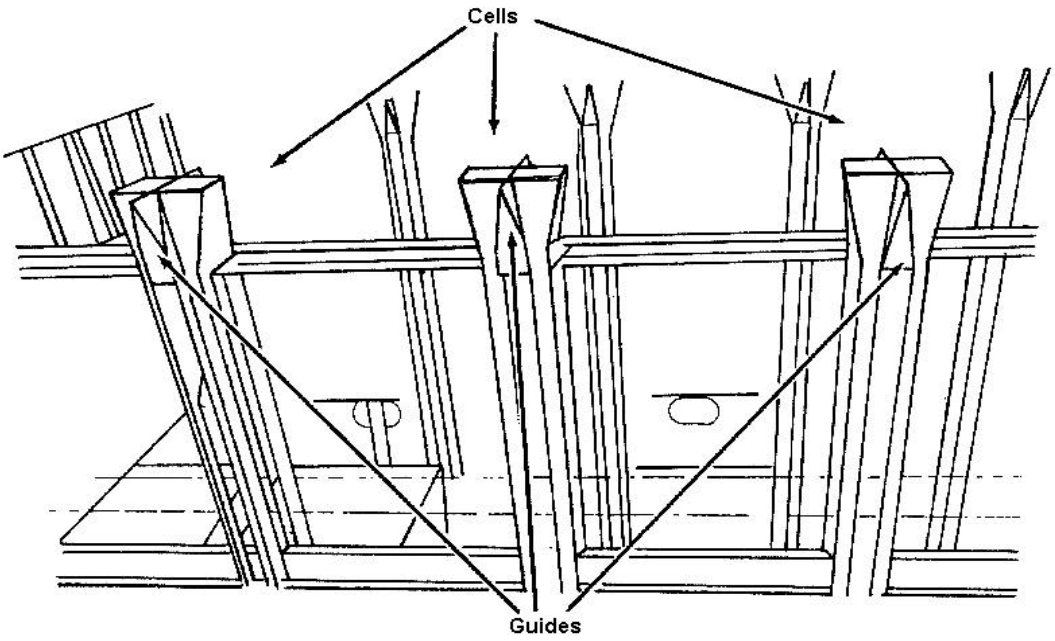

Figure 7-9. Location of vertical guides

(a) Bay numbers run forward to aft; and odd number is used for a 20-foot bay and an even number for a 40-foot bay. Thus, if the first two bays are 20-foot containers, they would be numbers l and 3. If the next bay is for 40-foot containers, it would be bay 4. However, if a bay can accommodate either two 20-foot containers or one 40-foot container, that bay would have three possible numbers: bay 5 and bay 7 if used for 20-foot containers; or bay 6 if used for a 40-foot container.

(b) Tiers are numbered from the tank top level at the bottom of the hold upward in numerical order. In this particular system, the loading terminal gives each level an even number. It is customary to use two digits at all times to prevent confusion. Thus, the levels would be numbered 02, 04, 06, 08, and so on for containers stacked below deck. This method allows for half-height containers. Many companies use half-height, open-top containers for heavy commodities such as pipe, steel, or ingots. In this case, the loading terminal would use a level number of 01 for a half-height container stowed on the bottom and 02 for the next container, regardless of height. For the levels on deck, the numbers jump to 82, 84, 86, and 88, to make a clear distinction between stowage locations below deck and on deck.

(c) The numbering of cells across the ship is also a matter of choice by the steamship companies. Some steamship lines simply number cells in numerical order across the ship from left to right, or from right to left. Others use odd numbers on the starboard side and even numbers on the port side. Thus, if containers were stowed 10-wide on a ship, the cell numbers would start from the centerline and go outboard. The starboard size cells would be numbered 01, 03, 05, 07, and 09, while those on the port size would be 02, 04, 06, 08, and 10. If an odd number of container cells exists, the centerline cell would number 00.

Downloaded from http://www.everyspec.com

e. The container vessel stowage plan is a diagram of the structure of the container spaces and the cargo on board. The stowage plan is divided into a series of numbered bay plans that show the container spaces for one bay at a time. Each bay plan shows the cell and tier numbers for each container space and provides space for container codes and weight information (see Figure 7-10). The container codes help to identify the container in that space. The weight information helps the planner distribute the weight of the containers. Once familiar with the container codes used in the bay plan, personnel will be able to read the bay plans to locate and identify the containers in them. Container codes consist of a port code, a container serial number, loading sequence code, and the container weight (see Figure 7-11).

f. Two codes are at the top of each square representing a container. The codes stand for ports of embarkation and debarkation. The callout of Figure 7-11 shows that the port of embarkation is YOK (Yokahama, Japan), and port of debarkation is OAK (Oakland, California).

NOTE: The port codes YOK/OAK happen to represent the names of civilian terminals. They are next port designator codes such as those contained in MILSTAMP, Volume I, Appendix B. If this vessel is carrying DOD cargo exclusives, the carrier may elect to print MILSTAMP port designator codes on the bay plan rather than the abbreviation for the city.

g. The serial number on any container is the only means of positive identification. The loading terminal stencils this number on various parts of the container in different size letters, depending on the owner's own marking system.

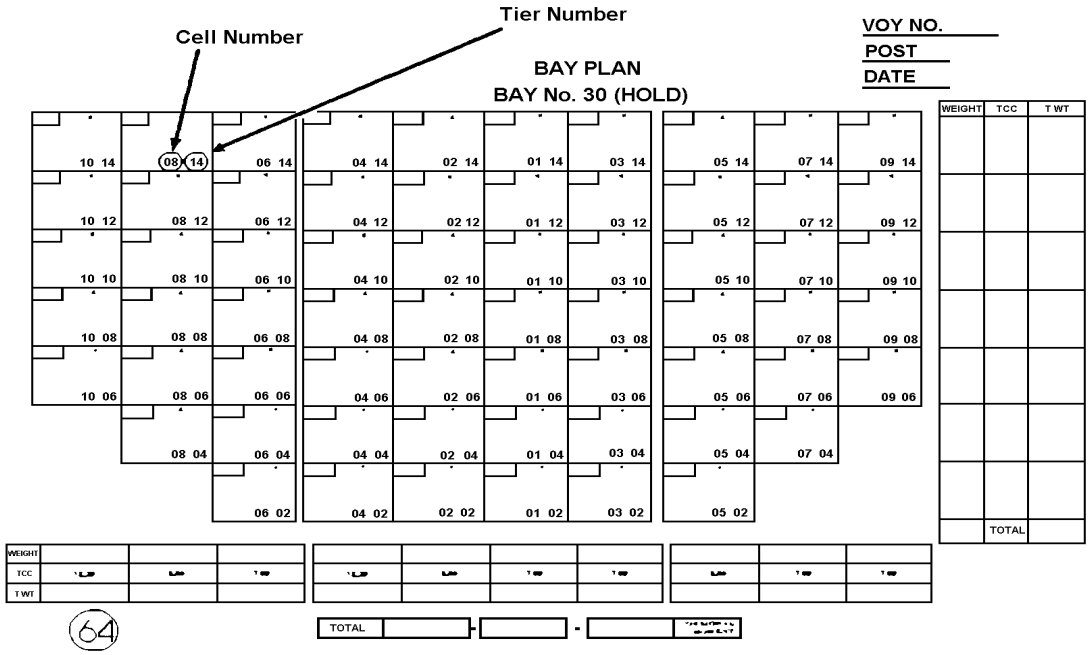

Figure 7-10. Bay plan

h. The loading sequence code identifies the sequence in which the containers were loaded. A most important principle for personnel to remember is first on—last off.

Downloaded from http://www.everyspec.com

i. The weight of the container is shown in two locations. In Figure 7-11, it is shown individually for each container. In Figure 7-12, page 7-34, it is shown as the combined weight of the entire tier and printed to the right of the diagram. These weights vary, depending on the contents of each individual container.

j. When reading a container or bay stowage plan (see Figure 7-12), personnel must do the following:

(1) Locate the port of discharge code by visually matching up the code against the containers shown in the stowage plan.

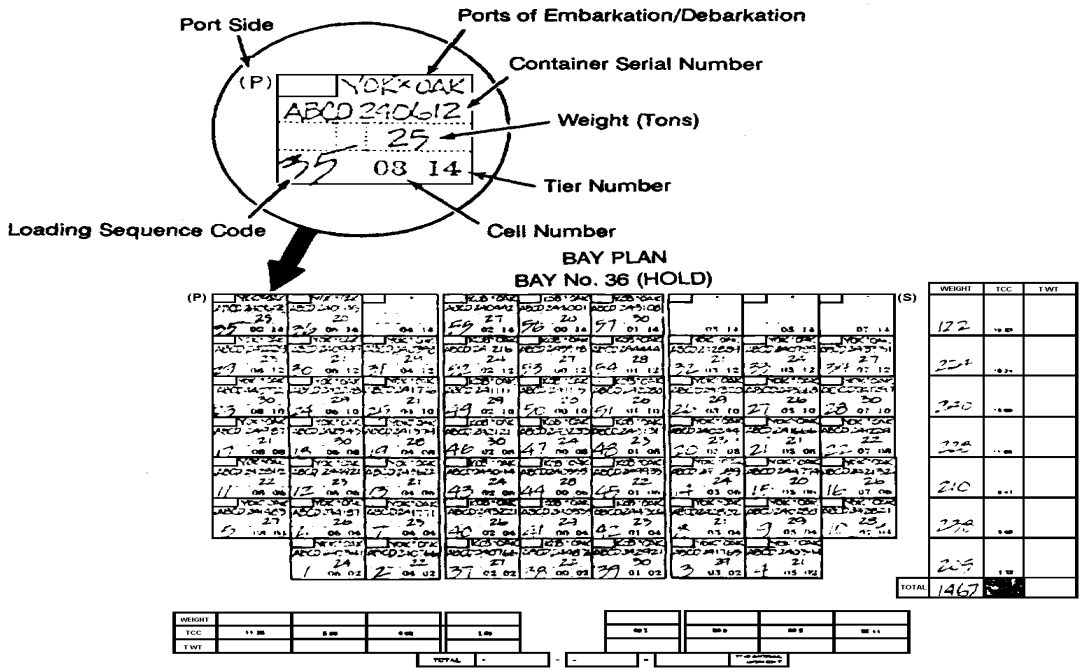

Figure 7-11. Identification of container codes

(2) Locate and identify containers. Using the port of discharge code, you visually identify and account for all containers to be discharged. This helps you to plan for a specific number of containers to be discharged.

(3) Follow the discharge sequence; containers with the smallest number (loaded first) must be discharged last. Always remember, first on—last off; last on—first off.

(4) Check off each container space as the container is removed.

Downloaded from http://www.everyspec.com

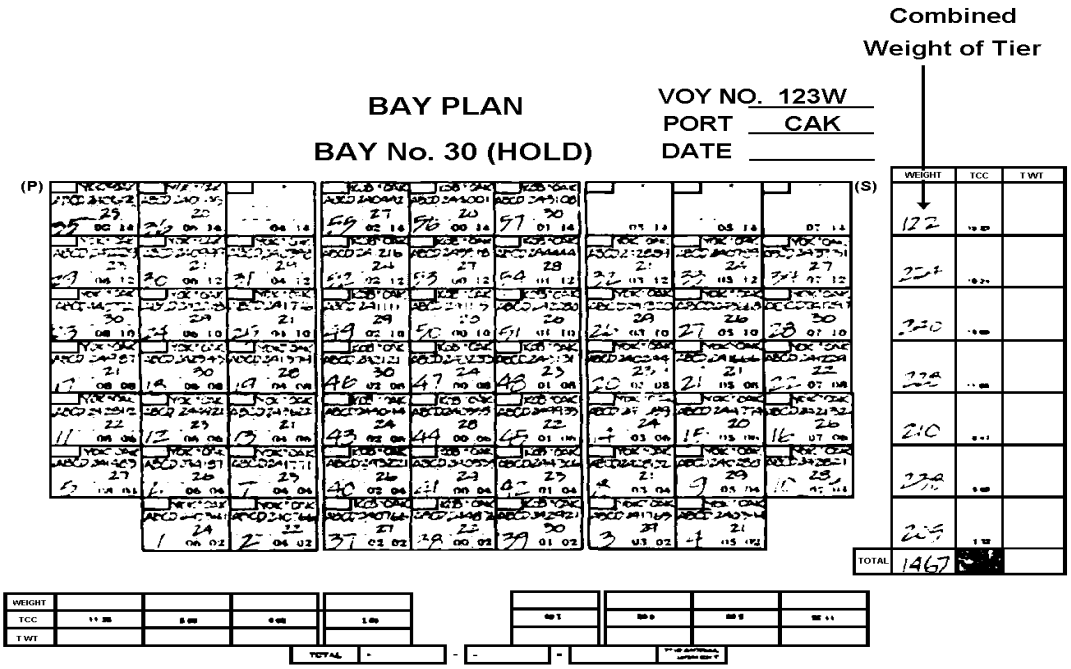

Figure 7-12. Reading the bay plan

Section IV. Discharge

7-18. DISCHARGE PLANNING. During discharge, cargo handlers must unload cargo from the vessel, segregate it, and place it aboard the mode of transportation that will move it to its destination. Cargo handlers should make maximum use of berthing space. They should plan for the discharge and movement of cargo on receipt of the ship's papers (stowage plan and ocean manifest) and cargo disposition instructions. Planning includes determining the following:

- Point of discharge—wharf or anchorage.
- Operating unit or units to be used—terminal service company, amphibian company, boat company, and so forth.
- Special equipment required for special or heavy lifts.
- Priority of discharge, if any.
- Arrangements for terminal clearance, including transportation required, depot capability to receive, and need for further segregation.
- Cargo documentation and personnel required to accomplish it.

7-19. DISCHARGE OVER WHARVES. When wharf discharge is being planned, cargo handlers should consider unloading the cargo onto the wharf or into lighters or a combination of both. Plans include using Army personnel and ship's gear, but may also include using other equipment and local civilian labor when available. Cargo handlers should consider possible delays caused by weather, enemy action, and so forth.

Downloaded from http://www.everyspec.com

a. **Wharf Requirements for Alongside Discharge.** For planning purposes, cargo handlers should ensure that 100 feet of wharf length is available for each ship's hatch. The water depth alongside the wharf should be sufficient to ensure a minimum of 2 feet of water between the ship's keel and the bottom at low tide. The water depth requirement will vary from 30 feet to 50 feet depending on the size and draft of the vessel to be berthed.

b. **Lighter Discharge.** Ship-to-lighter discharge may be required for one or more of the following reasons:

- To permit simultaneous discharge on both sides of vessels.
- To prevent rehandling of cargo that is to be cleared from the terminal by inland waterway.
- To lighten heavily laden vessels in deep water anchorages so that they may be accommodated at shallow depths alongside berths for further discharge.
- To fully discharge vessels in the anchorage area when wharf facilities are inadequate.
- To receive heavy lifts discharged by floating cranes.

Practically any wharf may be used for lighter discharge. Wharves from which the water recedes at low tide may be used by berthing the lighters during high tide and discharging them during low tide. For discharging on one side only, a minimum wharf width of 35 feet is recommended; for discharging on both sides, 45 feet is recommended.

7-20. BERTH ASSIGNMENT. Cargo handlers should consider the factors listed below in berth assignment.

- Destination of cargo.
- Type of cargo.
- Capability of discharge points to handle cargo.
- Capability of wharf facilities for clearing cargo from discharge point to destination, including segregation if required.
- Capability of wharf to accommodate vessel according to the draft, beam, and length of vessel, and the working space on the wharf.
- Types of discharge operations: ship to wharf or ship-to-lighter to wharf.
- Modes of inland transportation available.
- Projected shipping schedule and estimated times of arrival for the next several days.

7-21. EQUIPMENT REQUIREMENTS. Cargo handlers should study the cargo stowage plan and other ship's papers to determine requirements for special equipment. Deck cargo should be discharged as soon as the vessel arrives. Special bloating or shore-based cranes may be required to discharge deck cargo; barges or lighterage equipment may be needed to move it from shipside. Careful study of the ship's papers before the ship arrives will enable the operations personnel to schedule this equipment so that it will be available at the time and place required. Requirements for cargo-handling equipment, such as slings, bridles, snatch blocks, conveyors, and box hooks should be determined by supervisory personnel in time to have these items on hand when needed.

7-22. CARGO CLEARANCE TRANSPORTATION REQUIREMENTS. Operations personnel will be able to plan transportation requirements for cargo clearance using information found in the ship's papers and the cargo disposition instructions. The terminal commander is

Downloaded from http://www.everyspec.com

responsible for the segregation of cargo and its clearance from the water terminal. The importance of prompt clearance cannot be overemphasized.

a. The most efficient method of clearance is to discharge cargo directly from the ship to the terminal clearance carrier's equipment. Direct discharge from cargo hook to clearance mode, is the most desirable method. Operators may use materials-handling equipment to move cargo from the end of the ship's tackle to the clearance carrier whenever this method can speed up the operation.

b. Operating conditions do not always permit direct clearance. Cargo may be so mixed that to segregate it during discharging would seriously delay operations. Operators may encounter special situations that require timely segregation of cargo by items, commodity digit numbers, or lot. Suitable clearance conveyances may not be available; receiving installations may be unable to accept cargo promptly, or there may be delays or changes in cargo disposition instructions. When such conditions exist, cargo may be moved to temporary storage areas for segregation and subsequent shipment.

Downloaded from http://www.everyspec.com

CHAPTER 8

LOADING AND DISCHARGING CARGO VESSELS

Section I. Loading General Cargo

8-1. INTRODUCTION. The first two sections of this chapter cover the loading and discharging of general cargo vessels. Special attention is given to the different methods of securing cargo, as well as careful handling procedures to prevent damage. Sections three and four describe the loading and discharging methods for RO/RO vessels. The last section in this chapter discusses performing LO/LO and RO/RO operations on the T-AKR 295 and 296 Class Strategic Sealift Ship.

8-2. ADMINISTRATIVE LOADING. The majority of vessels are administratively loaded. Administrative loading is used in a noncombat situation. It makes maximum use of a ship's cargo carrying capability. In administrative loading, equipment and supplies are discharged and sorted before they can be used. Cargo loaded administratively can be discharged at a single port or multiple ports.

a. In loading for a single port of discharge, cargo planners stow supplies to make maximum use of the carrying capacity of a ship.

b. In loading vessels for multiple-port discharge, cargo planners stow supplies for more than one destination so that items can be discharged in the order of arrival at the ship's scheduled ports of discharge. Personnel must take care at the original and intermediate loading ports to prevent stowing cargo on top of other cargo that will be discharged sooner.

8-3. CARGO-HANDLING OPERATIONS. Containerization is a general term that describes the transportation of goods in specially designed containers so that loose products, small packages, high value items, and high density cargoes are unitized for easier handling. Containers can be moved aboard most cargo ships; however, movement aboard full containerships offers the greatest system efficiency.

a. Containerization has changed every aspect of cargo movement. Cargo-handling operations are no exception. The basic function of the cargo handler is to handle cargo between the terminal and the vessel. This function has not changed, but the manner in which it is accomplished and the equipment used have undergone a dramatic change. Full containerships are specially designed to carry containers. The first ships used to carry containers were conventional vessels converted to partial or full containerships, usually self-sustaining. The latest containerships are not self-sustaining. Conventional ships can carry limited numbers of containers but only as conventional cargo, which means containers are heavy lifts for most conventional vessels. Partial containerships are equipped to handle containers and break-bulk cargo. Only ships with a capacity of at least fifty 20-foot containers are considered partial containerships.

b. General cargo is still handled in the conventional manner and, in some trade routes, this remains the predominant method. Some cargoes will always remain as general cargo commodities. As containerization increases in a port, "cargo mix" in the general cargo operation undergoes change. Package cargo gradually disappears into containers and the larger, harder to handle (or

Downloaded from http://www.everyspec.com

low-revenue) cargo remains. With this specialization in specific commodities, it becomes economically necessary to improve the handling method previously employed.

c. Newer general cargo ships have replaced the conventional 5-ton capacity cargo gear with cranes of 20-ton capacity or more. Paper pulp and newsprint are handled with a special multiple-sling arrangement which handles several rolls in single hoist. Steel products and pipe are similarly handled. For the package cargo, unitization has eliminated almost all hand stowage in the vessel. Special "squeeze lifts" handle cotton and other solid-bale commodities. Special slings permit the unitization of bagged cargoes. Two different types of cages are used for handling palletized or unitized loads.

8-4. STOWAGE OF DIFFERENT TYPES OF CARGO. Many types of cargo are stowed aboard the vessel. This paragraph discusses how to stow palletized cargo, heavy lifts, nonunitized cargo, and refrigerated cargo.

a. **Palletized Loads.** Palletized unit loads are formed on general-purpose four-way entry pallets. A palletized unit load may not be more than 52 inches long, 43 inches wide, and 54 inches high (including the pallet). The gross weight may not exceed 3,000 pounds.

(1) The cargo may overhang the pallet no more than 2 inches on each end and 1 l/2 inches on each side and the palletized unit load will occupy approximately 70 cubic feet of shipping space. The cargo and pallet are securely bound together with adhesives and/or various types of banding. A common method is to use five steel straps around both cargo and pallet. Two are spaced equally and placed longitudinally, and three are spaced equally and placed transversely.

(2) When a small number of palletized loads are stowed, the best location is the square of the batch. However, if the volume of palletized cargo is great, it must be stowed in the ends and wings. Unlike heavy lifts, pallets are not designed for dragging. Although pallets can be dragged into the wings and ends, dragging is time-consuming and dangerous and causes excessive damage to the cargo. The following methods are recommended for placing palletized cargo in underdeck stowage:

(a) If there is sufficient headroom for forklifts to maneuver, they may be used as follows to stow palletized cargo:

- Place the required dunnage in the hatch. Usually little dunnage will be necessary since the pallet itself serves as dunnage, but some dunnage may be needed for leveling off, padding obstructions, and so forth.
- Hoist a forklift into the hatch. Short-mast, pneumatic-tired forklifts should be used.
- Place the pallets in the hatch so that the access slots face in a direction requiring a minimum of forklift maneuvering. Using the forklift, engage the load and proceed to the place of final stowage.
- If pallets cannot be tiered under the deck because of insufficient headroom clearance, it is often possible to load one pallet on top of another in the square of the hatch and move both pallets into the final stowage position with the forklift.

Downloaded from http://www.everyspec.com

- Use filler cargo or chocking to take out the sheer at the bottom of the hatch and to fill in any voids created by the shape of cargo, stanchions, or other fittings. Filler cargo must be of a type that will not be easily damaged.
- If it is necessary to operate a forklift on top of unitized cargo, dunnage off the entire hatch with two layers of dunnage, one fore and aft and one athwartship, making floors solid.

(b) Pallet jacks may be used to move palletized cargo into final stowage position under deck. Since pallet jacks cannot tier cargo, it will be necessary to stow one tier at a time. Dunnage must be laid between views so that the pallet jacks can be maneuvered.

(c) Palletized cargo may be moved into final stowage position by roller conveyors. T he roller conveyors are laid from the square of the hatch to the stowage position. The draft is landed on the conveyors and rolled into position. Conveyor sections must be lifted after each draft. One section of roller conveyor can be inverted so that the rollers are next to the deck or dunnage. The conveyor is spotted so that it is pointing in the direction of stowage. The draft is landed on the inverted conveyor and rolled into stowage position. The draft must be lifted so that the conveyor can be removed. The truck dolly or pallet dolly may also be used in the same manner as the inverted roller conveyor.

(d) Palletized cargo may be moved into final stowage position by means of wooden or metal single-type rollers.

b. **Heavy Lifts.** The stowage of heavy lifts, such as tracked vehicles, takes place every day in terminal operations. A heavy lift is any single package, pallet, unitized or containerized item that weighs 10,000 pounds or more.

(1) Before heavy lifts are loaded, cargo handlers should prepare the holds to receive the cargo. Dunnage material should be assembled for securing the lifts, blocks, shackles, draglines, bars, and other necessary equipment beforehand. This material should be loaded into the hold before the first lift is hoisted aboard.

(2) Cargo handlers should check all gear before picking up a heavy lift.

(3) Cargo handlers must use taglines on all heavy lifts. All personnel must stand clear of a heavy lift coming into the hatch until it is lowered to within a few inches of the deck. Personnel can then assist in steadying the lift for landing.

(4) Operators can move tracked vehicles, such as tanks, crawlers, cranes, and bulldozers from the square of the hatch to their stowage position by draglines. The tracks are barked or released to control the movement and direction of the vehicle. Only experienced operators of heavy equipment are permitted to steer tracked vehicles. When stowing tracked vehicles in the hold, cargo handlers will—

- Stow tracked vehicles in a fore-and-aft position, whenever possible.
- Leave multifuel vehicles in neutral gear with the brake engaged.
- Leave gasoline-driven vehicles in gear with the brake engaged.
- Lock turrets on tanks, and cabs on cranes, or lash them in position.

Downloaded from http://www.everyspec.com

(5) A double solid floor of planking not less than 2 inches thick must be constructed and nailed down before tanks, bulldozers, or cranes are loaded. When tanks are stowed in the between deck, similar flooring is laid. Operators should secure tracked vehicles weighing less than 18 tons with at least 4- by 6-inch lumber. Those vehicles weighing more than 18 tons should be secured with at least 6- by 8-inch lumber. Cargo handlers should lash all tracked vehicles, whether stowed on deck or below deck, with wire rope or chain.

(6) Use vehicle bridles and slings to hoist wheeled vehicles aboard ship. These vehicles are landed in the hold to head in the direction of stowage. After they are landed, one person releases the brake and steers the vehicle while it is pushed into stowage position. If the vehicle cannot be pushed into position by hand, a dragline is set up. If it is necessary to move one end of the vehicle sideways to stow it in the desired spot, use one of the following methods:

(a) Place dunnage smeared with skid compound or grease under the wheels on the end of the vehicle to be moved. Dunnage is laid in the direction of the move. Operators set up a dragline and the ends of the vehicle are dragged to the desired spot.

(b) Use heavy-duty rolling jacks to move the end over, if available.

(7) Operators will stow vehicles fore and aft whenever possible. As in the case of tracked vehicles, stowing them fore and aft lessens the chance that they will break loose when the ship rolls in heavy seas. When it is necessary to stow them athwartship, you should obtain permission from the vessel's master or representative. When securing vehicles stowed athwartship, cargo handlers must—

- Set the brakes on the vehicle.
- Block the vehicle at both sides and at both ends so that it cannot move in any direction. The size and type of vehicle will dictate the size of timber to use. (See Figure 8-1.)
- Brace individual vehicles to bulkheads, stanchions, or other vehicle blocking.
- Use lashing in addition to blocking and bracing. Vehicles must be lashed with wire rope. Put blocks under bumpers or chassis to keep tension off the springs

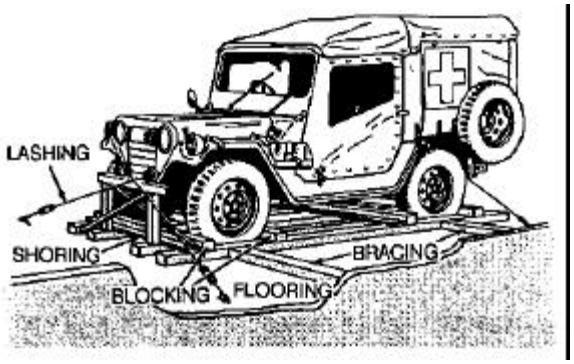

Figure 8-1. Vehicle secured on deck

(8) Large pieces of cargo such as walk-in refrigerators or decontamination units are often shipped in large cases. The main problem in stowing large heavy cases is moving them from the square of the hatch to the place of stowage. This can be accomplished by the following methods:

Downloaded from http://www.everyspec.com

- Land the case onto rollers when possible. Make sure it is landed to head in the direction of stowage. Remove the sling on the side next to the coaming. By topping, lowering, or winging the booms, move the head of the boom in the direction of the stowage. At the same time, put a strain on the sling still attached to the case. The case will then move in the desired direction until the sling or cargo block is topped by the coaming. Personnel should normally remove rollers before placing the case in the final stowage location. If further movement is necessary, use a dragline.
- Land well-constructed cases of cargo weighing up to 7 or 8 tons on rollers and move into position with crowbars and wedge point bars.
- Position the cases on dunnage runways smeared with skid compound, soap, or grease when rollers are not available. Then, move the cases into position with the dragline.

(9) Draglines are set up in the holds and between decks to drag heavy lifts from the square of the hatch to the place of stowage or from the place of stowage to the square of the hatch. Draglines are long lengths of wire rope (approximately 60 feet) with an eye in each end. To rig a dragline, personnel must—

- Attach a snatch block to the side of the cargo compartment or to the bulkhead at each end of the desired stowage location and in line with the cargo.
- Attach a second snatch block to a stanchion or other fitting to provide a fairlead to square of the hatch.
- Attach one end of the dragline to the item to be stowed.
- Pass the line through the snatch block that is made fast in the direction of stowage.
- Pass the line through the fairlead snatch block at the square of the hatch, attaching to the other end of the cargo fall (Figure 8-2).
- Drag the lift to its stowage position by taking up on the cargo runner with the winch. It is often necessary to drag one end of a lift to the place of stowage; then shift the snatch block to another position to drag the other end. Therefore, an additional snatch block is hung in the second position before starting the dragline precautions.

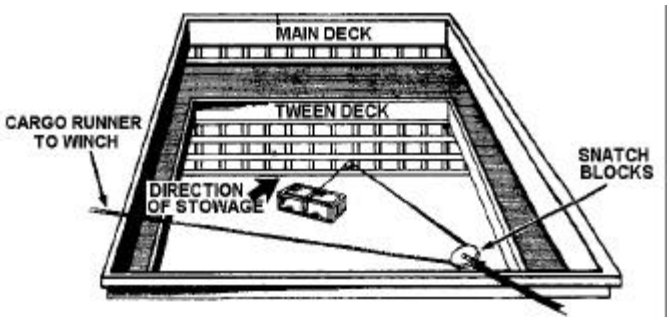

Figure 8-2. Dragline rigging

(10) Many vessels have special runners that are used for dragline operations, and it is often necessary to use them, and to take them off the boom. When cargo runners are used, personnel must—

- Always strip the cargo runner from the boom and lead it from the winch to the heelblock and then to the hold.
- Always use a fairlead snatch block at the top of the hatch inside the coaming.

Downloaded from http://www.everyspec.com

- Never run the cargo runner under the coaming. The runner will fray when pulled over the metal edges.

(11) When dragline operations are in progress, personnel must—

- Use additional snatch blocks as fairleads to prevent chafing.
- Lead runners to power at an adjacent hatch, warping winch, or anchor windlass when using jumbo booms for heavy lifts.
- Never drag with the cargo hook unless there is no other means to apply power to the dragline.
- Use a tackle (Figure 8-3) if the lift is too heavy for the winch to pull. If necessary, improvise a tackle using additional snatch blocks.
- Fasten beam clamps to the stiffeners or frames for securing snatch blocks when no pad eyes are available (Figure 8-3).
- Never pull on the side of a pad eye. This will cause the pad eye to bend over on its side.

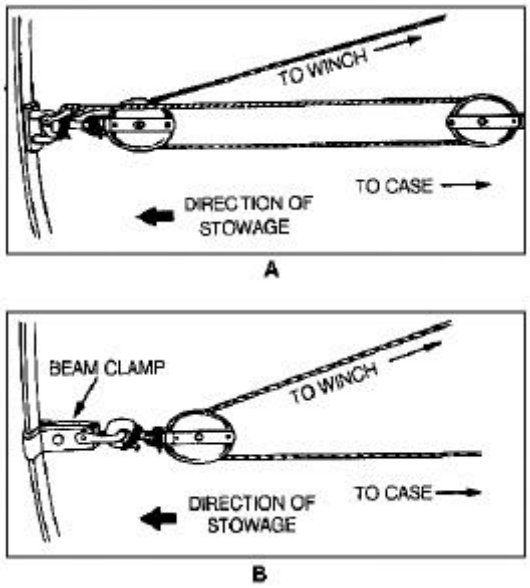

Figure 8-3. Use of tackle and beam clamps

(12) To prevent injuring personnel and damaging cargo, the following rules are to be observed:

- Keep crew out of the bight of the lines at all times.
- Keep out of the area between the lift being dragged and the place of stowage.
- When slings are placed around heavy cases for dragging, place dunnage between the case and the bearing part of the sling to prevent damage to the case.
- Observe the case while it is being dragged into position to ensure that it does not become jammed against dunnage, deck fittings, or other cargo. Any attempt to drag the lift while it is jammed will place an additional strain on the gear, and it may carry away the sling or pull it through the side of the case.

c. **Nonunitized Cargo.** In today's shipping society, cargo is shipped either in containers or unitized on pallets for quick loading and unloading of the vessel. However, circumstance may dictate that cargo be unloaded aboard a vessel in a nonunitized configuration. Nonunitized cargo may consist of the following items:

(1) ***Bagged cargo.*** The procedures for protecting, loading, and stowing bagged cargo are listed below.

Downloaded from http://www.everyspec.com

(a) To prevent water damage, bagged commodities, such as cement, should be stowed away from moist cargo or cargo that sweats. Bags also must be protected from any direct contact with metal. Use mats, paper, or other protective material to protect the cargo from moisture running down the ladders, frames, stanchions, and so forth. When bagged cargo is loaded aboard a vessel on which no dunnage is used between the bags and wooden cargo battens, the bags should be stowed on their ends in the wings of the ship. This will prevent them from protruding over the battens and coming in contact with the moist metal of the hull plating.

(b) Do not allow the bags to overlap the stringer plates of beams or similar obstructions in the hold. If the bags are allowed to overlap, vessel motion could cut them. Vertical dunnage placed against ladders and hatch battens will normally protect the bags from falling or chafing. Cargo handlers should never use handbooks to handle paper-bagged cargo.

(c) Bagged cargo is stowed in tiers across the hold (Figure 8-4). Cargo handlers may use any of the following three general methods for stowing bagged cargo:

- The full bag method provides good ventilation but provides an unstable stow. Unless required for some reason, this is the least desirable method of stowing bagged cargo.
- The half-bag method is used where floor ventilation is not important and bags are soft.
- The cross-tier method is used at corners and outer rows to prevent collapsing or shifting of the stacks of bagged cargo.

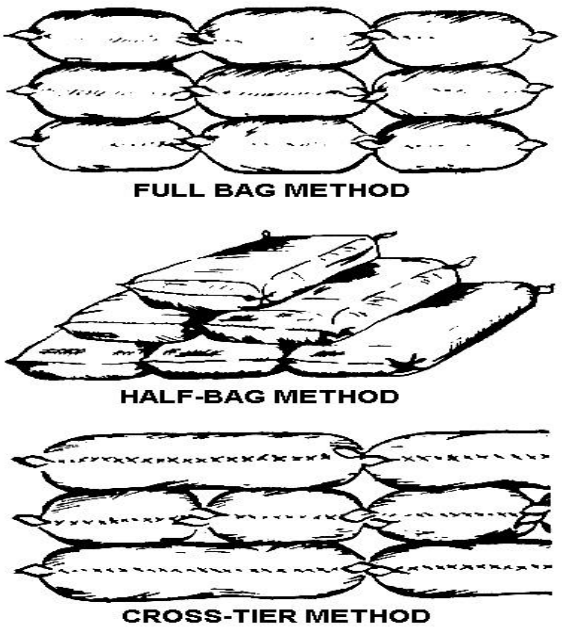

Figure 8-4. Methods for stowing bagged cargo

(d) Figure 8-5 shows a typical stowage of bagged cargo. Dunnage around the ladder protects the bags. The bulkhead prevents shifting, and the cross-tier method of stowing prevents collapsing.

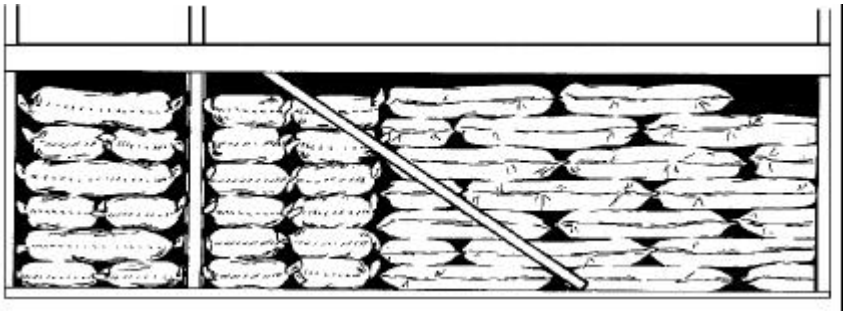

Downloaded from http://www.everyspec.com

Figure 8-5. Typical stowage of bagged cargo

(2) ***Baled cargo.*** The procedure for handling baled cargo is listed below.

(a) Baled cargo is easily damaged by chafing. To prevent chafing, use flatboard dunnage underneath bales since dunnage with sharp edges would cut through the bale wrappings.

(b) Dunnage all metal parts in the hold to prevent damage from moisture.

(c) Bales stowed in the wings of the hold are frequently placed on end so that only the outside layers of cargo will be damaged if moisture condenses on the sides of the ship or should chafing damage the bales.

(3) ***Cased goods.*** The procedures for stowing cased goods are listed below.

(a) Strong wooden cases of uniform size may be stowed brick fashion, in the same way as cardboard cartons. No dunnage floors are placed between the tiers in the lower hold.

(b) When stowing cased goods, cargo handlers must—

- Stow heavier cases in the lower tiers.
- Never stow a case so that it rests directly on top of and inside the four corners of the case beneath it unless dunnage is laid across the top of the lower case to take the weight.
- Stow cases containing cargo that might leak separately or at the bottom of the hold.
- Make every possible effort to keep ties level. This can often be achieved by filling up the spaces between large cases with smaller cases.
- Place dunnage over lightly constructed cases before the next tier is started.

(4) ***Crates.*** Crates are lightly constructed containers built as a framework with open sides and tops. They are used for ocean shipping and are stiffened by the use of diagonal pieces of lumber. The bottoms are solid with well-built foundations that support their internal weight. When crates are stowed, tiers should be kept level by laying dunnage between them. The dunnage may be spaced about 4 inches apart. Crates should be stowed in the tween decks or in the top tiers of the lower holds. If it is necessary to stow cargo over crates, only lightweight cargo should be used.

(5) ***Drums.*** Drums are made of steel. They are stowed athwartship and upright with the bungs up.

Downloaded from http://www.everyspec.com

(a) To prepare the hold for stowing drums, cargo handlers—

- Lay dunnage athwartship approximately 6 inches apart on the deck and place drums on the dunnage.
- Build a shelf over the turn of the bilge (see Figure 8-6).
- Place dunnage between the first row of drums and the bulkhead.
-

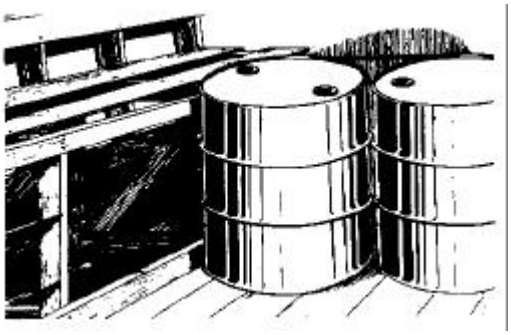

Figure 8-6. A shelf over the turn of the bilge

(b) To stow the first tier—

- Work from the wings to the center of the hold.
- Rest chimes squarely on the dunnage.
- If the first row does not fit securely across the bulkhead, save space by spreading out the drums, keeping equal space between them. Stagger the next row of drums (keeping the same spacing as in the first row). The second row should fit into the recessed areas created by the slight spacing between the drums in the first row.

(c) To stow the second tier, cargo handlers should—

- Lay dunnage over the first tier.
- Place drums on dunnage, as shown in Figure 8-7.

(d) Cargo handlers will stow succeeding tiers in the same way.

Figure 8-7. Use of dunnage in stowing drums

NOTE: Do not stow drums more than three tiers high.

(6) ***Cylinders.*** Strong steel cylinders are used for the shipment of compressed gases. These containers are under pressure of up to 2,000 pounds or more per square inch. Cargo handlers must handle these containers carefully and stow them securely to prevent damage to the cylinder. If damaged, the cylinders could cause damage to other cargo, as well as to the ship.

(a) Equipment used for loading or unloading compressed gases must be adequate to prevent cylinders from falling during handling operations. Use a tray with sideboards

Downloaded from http://www.everyspec.com

of sufficient height to prevent cylinders from falling off, a tray with small mesh net, a pallet with cylinders secured in place, a bridle, or a bridle sling with a round twin at each end of the load.

(b) Stowed instructions for each specific type of compressed gas are contained in paragraph 146.24-100 of the CFR.

(c) When CFR paragraph 146.24-100 permits on-deck stowage, the vessel master must approve the method. Cargo handlers should ensure stowage is consistent with the following conditions:

- The vessel must have open spaces on deck suitable for this stowage.
- Sufficient structural protection must be provided by the vessel's freeboards or bulwarks.
- Cylinders must be stowed on their sides unless boxes, cribs, or racks are provided for vertical stowage.
- When stowed on deck, the cylinders must be protected from the direct rays of the sun by awnings or other protective structures. Tarpaulins covering and in contact with cylinders are not considered adequate protection. Use of wood dunnage is permitted for protection.

(d) Cylinders stowed under deck must be placed in cool compartments or holds that can be ventilated or are of gastight construction. These compartments should be protected from open flame and any source of artificial heat. They must contain no living spaces for crew and passengers, and be readily accessible from hatches or cargo holds.

(e) Cylinders of compressed gas stowed either on deck or under deck will be kept from direct contact with the vessel's sides or bulwarks by dunnage, shoring, or other effective means.

(f) Cylinders of compressed gas stowed on their sides must be dunnaged under the first tier so that they will not rest directly on a steel or iron deck. Cargo handlers should stow each additional tier in the cantlines of the lower tier. Never stow cylinders bilge-to-bilge or directly on top of one another. The tiers may be stepped back and the ends of the cylinders alternated in order to clear the flange. Suitable lashing must be provided to prevent movement in any direction.

(g) When cylinders are stowed in a vertical position, they must be stowed in a block and cribbed or boxed in with suitable sound lumber. Cargo handlers will dunnage the box or crib at least 4 inches off the steel or iron deck. The cylinders in the box or crib should be braced to prevent any movement. The box or crib should be securely chocked and lashed to prevent movement in any direction.

(h) Lashing must be secured to pad eyes or other structural parts of the vessel. Pipe rails should not be used to secure lashings.

(i) The cylinder valves are protected by screw caps recessed into the cylinder. When personnel handle cylinders, they must ensure these screw caps are on and the valves are protected as much as possible. Rough handling may cause a valve to break and result in

Downloaded from http://www.everyspec.com

a serious accident. The uncontrolled escape of compressed gas will cause the cylinder to take flight, sometimes with enough force to blow it through the side of a ship.

(j) Open flame lights and-smoking are prohibited near flammable compressed gases. Responsible personnel will ensure that "No Smoking" signs are posted in the vicinity of such gases. Flammable gases may not be stowed below deck or on a vessel with Class A or Class B explosives, unless separated from the explosives by the engine or boiler rooms.

(k) A leaking cylinder must not be accepted for transportation.

(7) ***Lumber.*** Lumber is shipped in loose board lots and packaged lots. Cargo handlers should plan carefully to reduce lost space in handling packaged lumber. Large voids can be filled in with loose boards as necessary.

(a) Lumber may be stowed on deck or below deck. Deck loads of lumber must be securely lashed. The use of 3/4-inch chain made fast to pad eyes on deck and secured with turnbuckles, pear links, and slip hooks on top of the cargo is a suitable method of lashing. Chain lashing should be spaced no more than 10 feet apart.

(b) When finished lumber is being loaded, cargo handlers should use manila rope slings for hoisting. Hooks should never be used on finished lumber. If it is necessary to use wedge point bars to stow lumber, dunnage should be placed between the bars and lumber. When hoisting lumber, two slings should be used. If only one sling is used, the boards on the inside of the load may slip out, damaging cargo and injuring personnel. Lumber may be unitized for easier handling by making up drafts of uniform size and banding the cargo so that each draft is handled as a single quantity.

(8) ***Steel plate.*** The handling of steel plate is a difficult and dangerous operation. Cargo handlers should observe the following safety precautions when handling steel plate:

- Stow steel plate on the bottom of the lower holds or the between decks.
- Stow steel plate level on dunnage so that the weight of cargo loaded on top of it will be evenly distributed over the entire plate.
- Stow steel plate in a fore-and-aft direction if possible.
- Sling steel plate on the quarters at a point about one-quarter of the length of the plates from each end.
- Use a round turn on each sling and use taglines to control the draft if long lengths of plate have a tendency to bend when slung.
- Use crowbars or wedge point bars for moving the plates into final stowed position.

CAUTION: Never use plate-handling clamps for hoisting steel plate into or out of a hold. Use plate-handling clamps to lift steel plates only high enough to land the plates on dunnage where they can be properly slung with wire rope slings.

(9) ***Piles.*** Piles are long concrete or wood logs. They are usually stowed on deck, but may sometimes be stowed below deck. Piles stowed below deck are usually stowed in the larger hatches.

Downloaded from http://www.everyspec.com

(a) The following precautions must be taken when handling piles:

- Always use two slings when hoisting piles. Each sling should have a safe working capacity capable of supporting the load by itself.
- Always use taglines when handling piles.

CAUTION: Creosote will burn skin and eyes. After handling creosote-treated wooden piles, personnel should not touch their faces or eyes until they have thoroughly washed their hands, gloves, and anything else that has touched the creosote.

(b) Piles over 60 feet long are stowed on deck. It may sometimes be necessary to change the position of the slings in order to place the piles in the stowed position. Use a dragline for pulling the piles into position. If necessary, use the gear at the next hatch to stow extremely long pilings.

d. **Refrigerated Cargo**. Topics discussed in this paragraph include:

- Stowage.
- Types of refrigerated cargo.
- Containers.
- Receiving refrigerated cargo.
- Frozen products.
- Chill products.

(1) ***Stowage.*** Stowing refrigerated cargo does not differ greatly from that of general cargo, except that refrigerated cargo requires more care with temperature and ventilation and normally is not palletized. Foods having a strong odor should not be mixed with those having a tendency to absorb odors. All cargo compartments must be at the prescribed temperature before loading to prevent refrigerated cargo from thawing or spoiling. Perishable cargo is divided into three general classes: frozen, chilled, and air-cooled cargo.

NOTE: Representatives of the port veterinarian must be present at all times during loading to inspect the condition of the cargo and the correctness of the stowage and to monitor temperatures.

(2) ***Types of refrigerated cargo.*** Food products comprise the majority of refrigerated cargo, although other commodities such as medicines, drugs, and certain temperature-sensitive chemicals are often transported in this manner. Items shipped under refrigeration cannot withstand long periods of exposure to normal outside air temperature or other conditions that might result in deterioration and ultimate loss of a commodity. This applies whether the cargo is loaded in containers or is transported by conventional break-bulk stowage in the ship's refrigerated cargo spaces.

(3) ***Containers.*** Containerization is a very effective method of transporting refrigerated cargo. Continuous refrigeration between point of origin and destination and the elimination of multiple handling required in conventional break-bulk shipments have drastically reduced in-transit damage and loss of these products. The advantages of one handling at point of

Downloaded from http://www.everyspec.com

loading and point of discharge are especially apparent when compared to the conventional cargo system with its multiple handlings—

- from warehouse to rail,
- to truck,
- through the terminal and aboard ship,
- discharge at port as destination, and
- reloading again to truck or rail for final delivery.

Each handling is labor intensive, increases the potential for damage and loss, and interrupts the refrigeration process.

(4) ***Receiving refrigerated cargo.*** The receiving process in the terminal is critical and must be performed under systematic control. Many shipping contractors employ experienced cargo surveyors, who are present during the receiving process—

- to ensure that the cargo is received in the proper condition for shipment,
- to ensure that the cargo is properly stored on containers or aboard ship, and
- to ensure that the cargo does not remain in open storage in the terminal without refrigeration for an extended period of time.

(5) ***Frozen products.*** The handling procedures for frozen products are listed below.

(a) When a shipper-loaded container of frozen cargo is received at the gatehouse, the temperature shown on the record chart is first checked by the receiving clerk and matched against the temperature specified on the shipper's documents and recorded on the Equipment Interchange Report and the CLP. If they are not the same, the shipping contractor should be contacted to obtain the correct setting. If no verification is available, the temperature specified on the delivery documents should be used.

(b) Once the container is plugged in and running, the temperature must be checked periodically to make certain it is being maintained. Often, recently loaded containers will arrive with the temperature considerably higher than is required. In this instance, there is a good possibility that the contents may not have been thoroughly frozen at the time they were loaded into the container. Although the reefer units in these containers are designed to hold cargo at a specific temperature, they are not powerful enough to freeze effectively any cargo that was not initially frozen. A frequent defrost cycle record is another indication that the cargo may not have been properly frozen. Reefer units, like home refrigerators, have automatic defrosters which activate when the coils become heavily frosted. If this happens at short intervals, it is an indication that the unit may be overworking. It is important, therefore, to make periodic checks to verify that the temperature is gradually dropping to the required degree. If it does not drop, or drops very slowly, the shipping contractor should be notified. When notified, the shipping contractor may direct that the doors of the container be opened and an inspection be made to determine whether the container was properly stowed and whether sufficient ventilation space was left over the top of the cargo and in the door area. A record of such opening should be made on the CLP, along with the findings and any corrective steps taken. A new seal must then be affixed and the number recorded on the CLP.

Downloaded from http://www.everyspec.com

(c) Frozen cargo that is received by the terminal for containerizing or for loading aboard a break-bulk ship must be closely checked. The schedule for the receiving of frozen cargo must be closely coordinated with the loading operation. Ideally, the cargo should be received in lots that can be handled effectively without extended exposure to normal air temperatures. If cargo is received in larger quantities than can be immediately handled, it is customary for the delivering truck to wait, with its reefer unit in operation, so that the cargo will be kept at the proper temperature. When receiving the cargo it is also good practice for the receiving clerk to record the temperature of the reefer unit on the delivery truck, as well as take the temperature of the product. The instantaneous response of a probe or spike thermometer can be used to indicate temperature differences over time and within locations of contents in the container. If an initial high reading is obtained, the clerk inserts the spike into another area to confirm or correct the reading. Frozen meat should not be accepted if the temperature is above -10°C. If such a condition exists, the shipping contractor should be immediately contacted for a decision regarding the deposition of the cargo. Sometimes the cargo must be taken to a local reefer warehouse, where it will be "flash-frozen" to the required level.

(d) Not all frozen cargo is carried at the same temperature. Most meats and quick-frozen food products require a temperature at or below -18°C. A temperature of -22°C is recommended for frozen fish. Ice cream can be carried at -18°C to -25°C, depending upon the type. In addition, outside ventilation is not required for frozen cargo; air vents should be closed and the CLP should be marked "Vents Closed."

(6) ***Chill products.*** The handling procedures for chill products are listed below.

(a) The stowage of fruits and vegetables under refrigeration is much more complex than that of frozen products. Studies have been made over many years to establish the best condition for the preservation of fruits and vegetables, and these conditions must be specified by the shipper for the produce being transported. Each category of fruit and vegetable, for example, has characteristics which may dictate a difference in the carrying temperature, ventilation requirements, and stowage.

(b) If the documents for shipper-loaded containers delivered to the terminal do not specify temperature and ventilation requirements for the contents, the shipping contractor must be asked to apply this information. The setting on the reefer unit should then be checked against the information supplied to ensure a match. The date and time of arrival in the terminal should be marked on the record chart. The container is then plugged in. The temperature should be monitored carefully, and periodic readings noted on the chart during the time the container is in the custody of the terminal. It is very important that the temperature in storage be held fairly constant, since the condition and nature of the produce being shipped, as well as the manner in which it is stowed in the container, are beyond the control of the terminal or the shipping contractor. A claim for any in-transit deterioration or loss of the produce, therefore, can seldom be assigned to the terminal as long as the proper temperature measurement has been maintained. Variations of 2 to 3 degrees above or below the desired temperature are, in most cases, not acceptable. For many fruits, such as apples and pears, a maximum variation of 1 degree from the desired temperature is recommended. The setting of the vents is also important and the shipper's instructions in this respect must be followed.

Downloaded from http://www.everyspec.com

(c) Produce received for loading into containers at the container freight station or for conventional break-bulk stowage in the vessel's reefer compartments must be closely checked at the time of receipt. Produce should be properly pre-cooled prior to receipt at the terminal. Pre-cooling is performed commercially at special facilities beyond control of the terminals. Most produce is delivered to terminals from reefer warehouses where it has been maintained at the proper temperatures for the specific type of commodity. If, however, produce is delivered directly from the field, it may not be at the proper temperature for storage and shipment. Upon receipt, the temperature shown on the reefer unit of the delivering carrier should be recorded and the produce checked for condition and excessive bruising. Any signs of deterioration or mold should be noted. The shipping contractor should be notified of such conditions and their decision obtained on whether the produce is to be received and shipped, or rejected.

(d) Most reefer containers have an adjustable ventilation window adjacent to the reefer unit. This window can be set for 0 to 100 percent ventilation, according to shipper's instructions. Thus, outside air can be introduced through the cooling system in a specified amount and the gases generated by the produce expelled from the container. To provide the necessary space for air circulation, it is usually the practice to use wood stripping or lathes between every other tier in stow. "Smokestack stowage," which involves stowing tiers of packages in a square pattern so that there is an empty "chimney" space in the center of the square, is sometimes used to increase vertical ventilation. This method, however, can result in loss of space in the container. Container construction may also affect storage space. Many containers, for example, have a line painted near the ceiling to indicate the maximum height to which cargo can be stowed. Other containers have an air duct running along the center of the ceiling, which must not be blocked by cargo. Container sides are usually ribbed to provide an air space between the skin and the cargo. The floor is constructed with small "I" beams, which are perforated to supply a clear airflow along the floor beneath the cargo.

(e) At times it may be necessary to stow different commodities together. This may or may not be safe. Fresh fruits can generally be stowed together if they have the same temperature requirements. With some products, however, there is a cross-transfer of odors, and some products emit volatile gases, such as ethylene, that may be harmful to other products. Some general rules of storage follow:

- Do not store apples or pears with celery, cabbage, carrots, potatoes, or onions.
- Do not store celery with onions or carrots.
- Do not store citrus fruits with any strongly scented vegetables.
- Odors from apples and citrus fruits are readily absorbed by meats, eggs, and dairy products.
- Pears and apples acquire an unpleasant earthy taste and odor when stored with potatoes.
- It is recommended that onions, nuts, citrus fruits, and potatoes each be stored separately.
- Apples, pears, bananas, avocados, peaches, plums, cantaloupes, ripe honeydew melons, and tomatoes are among the fruits and vegetables that give off ethylene gas, which can be harmful to other items such as lettuce and carrots.

Downloaded from http://www.everyspec.com

8-5. GENERAL RULES FOR STOWING CARGO. One objective of proper stowage is to ensure that cargo arrives at its destination undamaged. The other objective is to put as much as you can in the available space.

a. Personnel should take the following actions to reduce cargo damage:

- Ensure the cargo hold area is clean before stowing cargo. If the hatch is not cleared, pieces of wood from broken crates may get under the pallets when they are put into the storage position. A lopsided pallet may cause the whole shipment of cargo to shift when the ship is at sea. Cargo handlers should stow cargo so that the strongest structures of an item will bear the greatest pressure and weight of that item.
- Use dunnage only in required quantities.
- Stop cargo damage by following instructions on labels such as USE NO HOOKS, THIS SIDE UP, DO NOT DROP, and so forth.
- If it is necessary to walk on top of or land drafts on cargo such as cardboard cartons, lightly-constructed cases, bags, and crates, place a layer of dunnage over the cargo to protect it from damage.

b. To obtain maximum use of the hold's carrying capacity cargo handlers should minimize broken stowage by—

- Careful prestowage planning so that cargo will fill the hold without leaving large empty spaces.
- Proper supervision during loading to ensure correct stowage and fit of irregularly shaped packages.
- Maximum use of filler cargo where empty space occurs.
- Nesting of cargo to use space that would otherwise be wasted.
- Avoiding excess dunnage.
- Using dunnage for false decks to permit additional stowage.

8-6. SECURING OF CARGO. The shifting of cargo during a voyage results in considerable damage to the cargo and the ship. To prevent this damage, cargo handlers must use good stowage practices including the proper use of lashing and dunnage. Other means of securing cargo include shoring, tomming down, blocking, and bracing.

a. All deck cargo must be lashed, in addition to being shored, blocked, and braced. Cargo stored below deck can usually be secured by shoring, blocking, and bracing with timbers firmly wedged and nailed or lashed.

b. Cargo handlers should ensure that cargo is secured when a vessel is sailing in convoy and the master is not permitted to alter course or speed to avoid rough seas or foul weather. Since convoy sailing also exposes deck cargo to greater hazards, personnel should give attention to the type, strength, and number of the lashings.

8-7. LASHING AS A MEANS OF SECURING. Lashing is the means of securing vehicles and other cargo by using wire ropes, chains, steel bars, and turnbuckles.

Downloaded from http://www.everyspec.com

a. **Lashing Material.** Responsible personnel should select lashing materials based on their availability and the type of cargo to be secured.

(1) Wire rope, 5/8 inch in diameter, is used most frequently for heavy cargo and large items.

(2) Chain is often used for securing lumber and extremely heavy objects on deck. The most common size chain is 3/4 inch in diameter. Wire rope may also be used for this type of cargo.

(3) Steel or wrought iron bars are exceptionally good for securing boxed or rectangular cargo.

(4) Steel strapping is also used for lashing.

(5) Turnbuckles or other tightening devices are used with all types of lashing to permit tightening en route.

b. **Storage.** Cargo handlers store lashing materials in the port dunnage yard along with dunnage. Inventory control procedures are set up for these materials so they are always on hand when a vessel is ready for loading.

c. **Basic Lashing Procedures for General Cargo.** The methods used to lash cargo will vary because of the different types, sizes, and shapes of the cargo that must be shipped. Cargo handlers may use any of the following procedures to secure cargo:

(1) Pass one or more lashings over the top of the item. This method is the least desirable because it is most ineffective for opposing centrifugal force. The cargo simply slides back and forth under the lashing.

(2) Pass two or more lashings completely around the item. This type of lashing provides greater resistance to the forces exerted athwartship. It prevents the cargo from moving without exerting strain on the lashing. This is the more effective of the two methods.

(3) Combine one of the above methods with dunnage or saddles at each corner. This prevents the lashing from cutting into the cargo.

(4) Do not use lashing unless the following facts are taken into consideration:

- All component parts of the lashing material are of approximately equal strength. Since the tension that the lashing bears is governed by the weaker part, it is a waste of material to use a turnbuckle half the strength of the wire rope.
- A lashing may cut into the cargo it secures if nothing is used to separate the two.
- Use dunnage for protection if saddles are not available.
- Because a lashing exerts compression on the cargo it secures, extra bracing is necessary to prevent crushing.

Downloaded from http://www.everyspec.com

- Winding a continuous length of wire rope around an item several times is a poor method because a break at any point will make the entire lashing useless. Use two or more lashings instead.

(5) For all types of lashing, items such as wooden capping, angel iron, or similar materials should be used to prevent wire ropes or chains from cutting through the edge of a case.

8-8. SECURING DECK CARGO. The weather deck is used to stow cargo that is too large to go through the hatches, or when there is no room below deck for storage. Whatever the reason, deck cargo is loaded last and discharged first. This prevents cargo from being lifted high to pass it over the deck cargo, and to give the handling personnel a clear view of the operations area.

a. **Cargo Protection.** Cargo handlers should protect cargo loaded on deck as much as possible from damage by seawater. Strips of dunnage are laid on deck to receive cargo, to allow removal of slings, and to protect cargo from water on deck.

b. **Prevention of Equipment Blockage.** When a large quantity of cargo is to be stowed on deck, personnel must avoid blocking off equipment. It is good practice to outline the equipment in chalk, to draw attention to it. This equipment includes—

(1) Bitts and chocks.

(2) Sounding pipes to the bilges and the ballast tanks.

(3) Handles of valves controlling the operation of watertight bulkheads or piping systems.

(4) Any other equipment essential to the safe operation of the vessel.

c. **Catwalks.** For the safety of the crew, catwalks are constructed over deck cargo (Figure 8-8). They are to be less than 3 feet wide and should have strong handrails and suitable approaches. Avoid straight ladders to the well deck. Ladders should be at an angle. Ramps are built so that the crew will have ready access to lifeboats, gun stations, and frequented work areas.

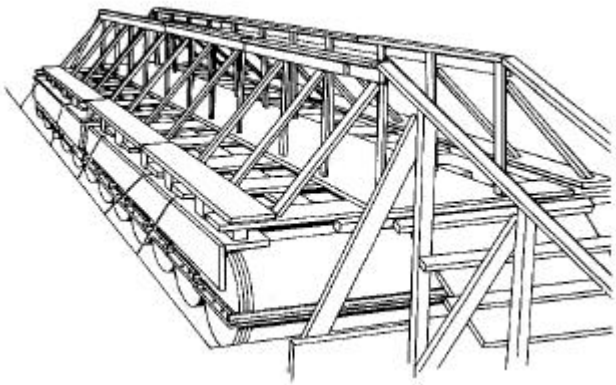

Figure 8-8. Catwalk over deck cargo

d. **Cases.** Stow cases on deck so that they can be lashed in three separate blocks: one on the square of the hatch and one on each side of the hatch (Figure 8-9). Personnel should observe the following precautions when stowing cases on deck:

Downloaded from http://www.everyspec.com

- Use wire rope and chain lashings.
- Use angle irons on corners or edges under lashings to prevent cutting into the case.
- Sheath exposed forward parts of the cases for protection against seawater.
- When necessary, stow cases on the square of the hatch in such a manner that the cargo extends beyond the hatch coaming.
- Build tables to support the overhanging cases beyond the square of the hatch.
- Use bracing rather than shoring when cases are secured on deck, since shoring has a lifting effect on cargo.
- Use lag screws or bolts to tie timbers together for blocking and bracing. Use nails and spikes only on small timbers or where it is impossible to use screws and bolts.

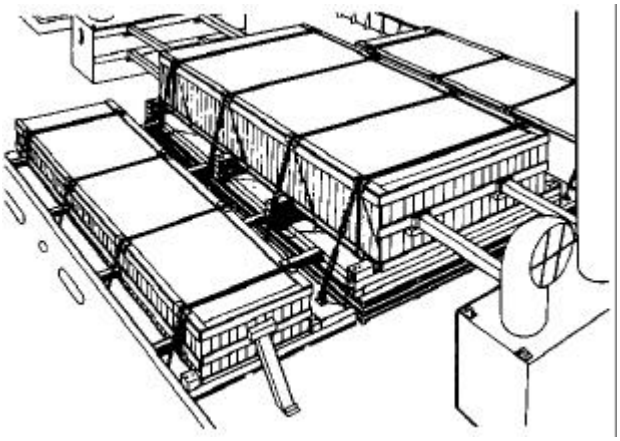

Figure 8-9. Deck-stowed cases

e. **Wheeled Vehicles.** Storing wheeled vehicles on deck requires special precautions.

(1) Normally, vehicle engines should be facing forward. Cargo handlers should place a double layer of l-inch thick dunnage on deck under the wheels. Vehicles should be blocked on both sides and at both ends so that they cannot move in either direction. Responsible personnel must take care to brace all wheel chocks. A minimum of two lashings are required on both the front and rear of vehicles such as trucks and ambulances. However, additional lashings may be required by the vessel master. Lashing may be either crossed with the cable forming an "X" or led outboard from the vehicles.

(2) Vehicle operators should block up the chassis to take pressure (caused by the tension of the lashing) off the springs.

(3) Figure 8-10 shows the deck loading of vehicles when mechanical quick-release devices are available as part of ship's gear. When these devices are used, no special blocking and bracing or dunnage is necessary.

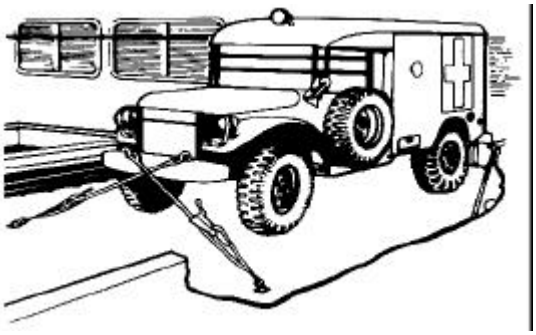

Figure 8-10. Deck-loading vehicles with mechanical quick-release devices

Downloaded from http://www.everyspec.com

f. **Tracked Vehicles.** These vehicles require special storing procedures with which cargo handlers should be familiar.

(1) Tanks and other tracked vehicles to be stored on deck (Figure 8-11) are secured by having operators—

- Land the vehicle treads on two 4- by 12-inch timbers.
- Secure an 8- by 12-inch timber against the tread on each side by three angle irons. Each angle iron should have holes for two 7/8-inch lag screws to be used to secure the 8-by 12-inch timbers to the deck.
- Chock each end of the vehicle with a timber placed against the treads and secured to the fore-and-aft timbers.
- Lash vehicles to the satisfaction of the vessel master. Use tie rods, chain, or wire rope and turnbuckles.

(2) The timber sizes given above are merely guides. The proper materials are not always available in overseas areas.

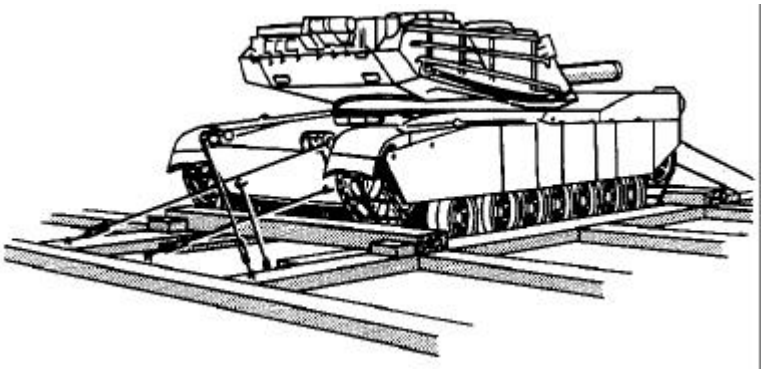

Figure 8-11. Stowing a tracked vehicle on deck

g. **Small boats.** Watercraft present a special transportation problem because of their size, weight, and comparative fragility. Most watercraft are so large that they must be stowed on deck. Cradles especially made for the particular type of watercraft may be constructed by the manufacturer. However, in most cases, the loading activity has to make them from available materials. Since the craft sit high in the air, they are exposed to wind and sea more than most cargo. Therefore, lashing must be applied with special care.

8-9. DUNNAGE. Although the term dunnage ordinarily refers to planks and pieces of wood, it may be any material used to protect a vessel and its cargo. Good stowage is impossible without carefully applied dunnage.

a. **Use of Dunnage.** The following guidelines cover the uses of dunnage, dunnage materials, rules of good dunnaging, how to measure dunnage, and removing and storing dunnage material. Dunnage is used to—

- Prevent cargo from shifting and chafing.
- Chock off and secure containers.
- Block off broken stowage and fill void space that cannot be filled with cargo.
- Protect cargo from contact with water or other liquids that may get into the holds.
- Provide air passages for effective ventilation.

Downloaded from http://www.everyspec.com

- Provide spaces for air circulation in refrigerated holds.
- Distribute weight.
- Separate cargoes.

b. **Dunnage Materials.** The materials and the basic principles used for donnage are listed below.

(1) Almost any materia1 can be used as dunnage. The materials most frequently used follow:

- Rough lumber of the same thickness but of different widths and lengths is the most common type of dunnage. Rough lumber may consist of pieces of pine, hemlock, spruce, or similar woods.
- Paper is often used to protect cargo from dirt, dust, and moisture and to separate shipments.
- Burlap is often made up in rolls or squares and used in the same way as paper.

(2) Hard and fast rules for selecting and using dunnage are not possible because of the wide variety of cargo carried, differences in atmospheric conditions, and the availability of dunnage material, among other factors. However, the following basic principles always apply. Cargo handlers should—

- Never use green or contaminated wood that may harm the cargo.
- Carefully select the quantity and type of dunnage to correspond to the type of cargo carried.
- Place the bottom layers of dunnage so that any water in the hold can flow to the drains. This is accomplished by laying the first layer of dunnage so that it points toward the drains and the next layer faces the opposite direction. Cargo is then stowed on the upper layer of dunnage.

c. **Measuring Dunnage.** Personnel must measure the lumber used aboard the vessel for the storage of cargo. The formula used is listed below.

(1) The measurements obtained in inches and feet must be converted to board feet. This is the unit of measurement for lumber in the United States. Users should enter this information on the manifest for dunnage accountability. To convert inches and feet to board feet, the following formula is used:

1 board foot = 144 cubic inches.

Board feet = Length (inches) x height (inches) x width (inches), divided by 144.

This would be written as follows:

$$\text{Board feet} = \frac{L(in) \times H(in) \times W(in)}{144}$$

Downloaded from http://www.everyspec.com

(2) The following represents the correct solution for a problem requiring lumber to be converted from inches and feet to board feet. It should be computed for a stack of 2- x 4-inch lumber. The lumber is 4 feet 8 inches long with 48 pieces in the stack.

Length = 4 feet 8 inches (4 x 12 + 8 = 56 inches)

Height = 4 inches

Width = 2 inches

$$56 \text{ inches x } 4 \text{ inches s } 2 \text{ inches} = \frac{224 \text{ x } 2}{144} = \frac{448}{144} = 3.11$$

3.11 board feet x 48 pieces = 149.28 or 149 board feet in the stacks.

d. **Removing and Storing Dunnage.** Cargo handlers normally remove dunnage from the ship during discharge. While the cargo is being worked, dunnage is made up in drafts as it becomes available. When a draft is complete, cargo handlers should remove it. This procedure will ensure that dunnage is handled a minimum number of times aboard the ship.

(1) Cargo handlers remove the drafts of cargo or dunnage from ships in cribs constructed and used in the holds or in slings. A crib is 3 feet wide, 8 feet long, and approximately 4 feet high. The dunnage crib holds 80 to 100 board feet of dunnage. When responsible personnel discharge a crib or sling load of dunnage to the pier, the crib and/or dunnage are then removed by truck or forklift to the port dunnage yard. Lastly, personnel return the crib (if any) to the ship for further use after the ship is unloaded.

(2) Once received at the port dunnage yard, cargo handlers immediately sort and bundle dunnage according to size. The nails are taken out and the dunnage is sorted and accounted for at this time.

(3) Personnel maintain stock levels on inventory control cards in a highly visible index file.

(4) Personnel stack dunnage with one end even to ensure compactness and ease of handling and to allow room to work in the aisles.

8-10. OTHER MEANS OF SECURING CARGO. The use of dunnage alone will not meet safety requirements and completely protect the cargo from damage. Special constructions may be required to properly stow and secure cargo. These special constructions are known as blocking and bracing. Blocking is placing timbers or blocks next to the sides and ends of cargo to prevent horizontal movement. Bracing does what its name implies: it braces, supports, or reinforces the blocking and strengthens the pressure applied against the cargo. Blocking must be braced to be effective. Blocking and bracing are normally done by placing timbers between a unit of cargo and a bulkhead, or between two units of cargo.

a. Shoring is supporting objects by bracing them from below (Figures 8-12 and 8-13). Shoring in the between deck and lower holds can increase the deck load capacity of the average

Downloaded from http://www.everyspec.com

ship about four times. This increase makes it possible for the main deck to carry loads such as locomotives weighing up to 12,000 pounds per square foot.

b. Tomming is bracing an item by holding it down from above (Figure 8-12). This method may be used when stowage space has not been completely filled. Also, tomming may be used when there is danger that the motion of the vessel might cause the cargo to shift.

NOTE: The maximum effective length of timbers used for bracing, shoring, and tomming is equal to 80 times their minimum dimension. For example, if a piece of timber is 4 inches thick and 6 inches wide, its maximum effective length is 10 feet (4 x 30 = 120 inches or 10 feet).

c. Bulkheading refers to the use of vertical partitions made of dunnage to keep cargo from shifting or to keep it away from hot bulkheads.

d. Cribbing is the use of dunnage for blocking in the cargo compartment to eliminate void space. Cribbing is used to fill vacant space as a precaution against shifting and to maintain a level tier so that other cargo may be stowed on top.

e. Magazines are special containers required by federal and Coast Guard regulations for stowing certain classes of explosives. These containers, known as Class A magazines, ensure adequate segregation and protection of the explosives. Magazines may be constructed of either steel or wood, depending upon the quantity and compatibility of explosives. For construction of these magazines refer to TM 55-607.

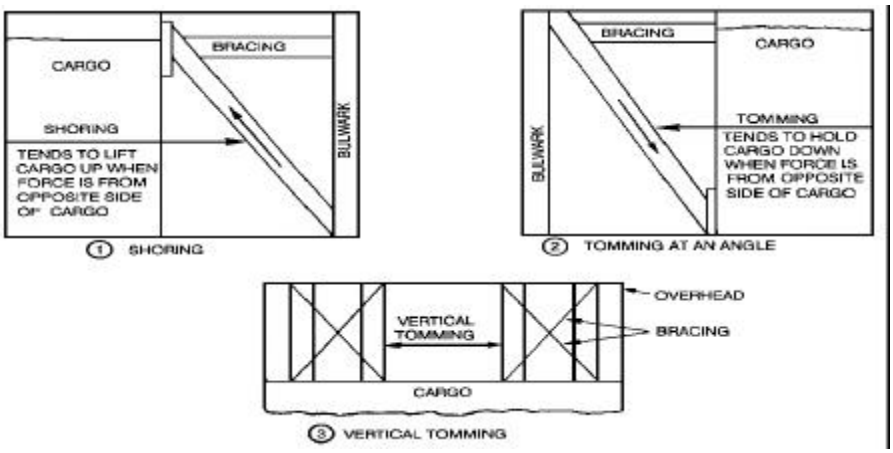

Figure 8-12. Shoring and tomming methods

Downloaded from http://www.everyspec.com

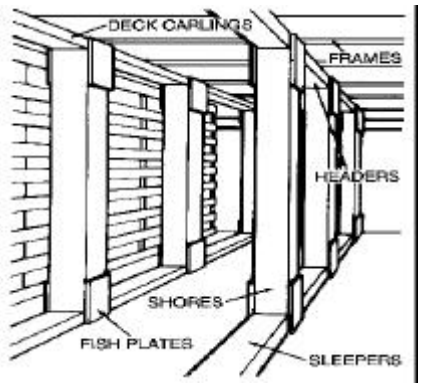

Figure 8-13. Applying shoring materials to a ship's hold

Section II. Discharging Break-Bulk Cargo

8-11. DECK CARGO. Cargo handlers unload deck cargo first. Even deck cargo that will not interfere with the discharge of the hatch is removed first to provide more room to work on deck. Of course, cargo that is destined for another port of call is not discharged. All lashing material is removed from the ship unless other instructions are given. So that the lashing material may be found easily later, cargo handlers will—

- Coil and tie off wire rope. Tag it to show the size of the rope. If the wire is to be stored for a long time, it may be lubricated and boxed. Place wire of the same diameter and approximately the same length on reels if the amount of lashing received warrants such action.
- Open turnbuckles, sort by size, lubricate, and place them in bins or boxes marked with the size of the turnbuckles.
- Remove shackles and replace pins. Sort the shackles by size and place them in boxes or bins marked with the size of the shackles.
- Remove blocking material from the ships. Clean and sort it so that it will be available when needed.
- Discharge dunnage material.

8-12. CARGO IN HOLDS. Keep the cargo in the hold as level as possible during discharge. Breaking out cargo stacked higher than reach or tunneling under other cargo is very dangerous. General cargo, drummed cargo, and barreled cargo are loaded in the wings and ends of the hatch. Vehicles and heavy lifts are loaded in the square. When discharging cargo loaded in this manner, cargo handlers should build tables or platform up in the square of the hatch near the coaming so that the cargo can be handled without damaging it or injuring personnel. These tables should be constructed of lumber or pallet boards. When pallet boards are used, dunnage is laid on top of the pallets to make a solid floor for personnel working on the table. For light cargo, tables are necessary only until enough cargo has been removed to enable personnel to stand on the cargo and pass it down. For handling heavy cargo, such as asphalt in barrels or POL in drums, personnel should use tables until the cargo can be handled from the deck without having to reach for it. As cargo is discharged from the vessel, it is normally moved away from the pier.

Downloaded from http://www.everyspec.com

8-13. TERMINAL CLEARANCE. Cargo handlers are responsible for terminal clearance. To perform this task successfully, follow these guidelines:

- Cargo should not be allowed to accumulate on the pier. This hinders discharge and can eventually bring the operation to a standstill. Accumulated cargo is also subject to damage and pilferage.
- Clear cargo from the terminal as quickly as possible. Load the cargo directly onto trucks and trailers or railway equipment for delivery. This method is a fast and efficient way to clear the terminal and pier because the cargo is handled only once.
- If quantities of cargo belonging to several services are unloaded, clearance carriers are lined up on the pier according to service. Operators then transport drafts of cargo to the carriers from the hold using forklifts.

8-14. CARGO TALLYING METHODS. Checking cargo involves two general functions:

- Inspecting cargo for quantity, condition, and identifying marks.
- Making observations a matter of record.

The second function is referred to as tallying. Any method of tallying cargo may be used that quickly provides an accurate and legible cargo count. The cargo count is recorded on a tally sheet. A tally sheet may be a TCMD, a computer printout, or a locally produced form. The best method for tallying one type of cargo, such as boxes of rations, may not be the most accurate method for another type of cargo, such as serially numbered vehicles or individually numbered packages. To satisfy various requirements, four tallying methods are in general use in the Army: package, unit, block, and straight.

a. **Package Method.** The different packaging methods are listed below.

(1) When the TCMD indicates more than one piece of cargo was shipped under the same TCN and each piece of cargo has its own label the tallying cargo is used. When using this method, the cargo checker lists each piece number on his tally sheet. As each numbered piece is discharged, he crosses out the corresponding number on his tally sheet. For example, pieces 1, 3, and 5 of a five-piece shipment have been loaded. They are marked off as follows:

~~1~~ 2 ~~3~~ 4 5

(2) The piece number and total number of pieces are shown at the bottom of the address label. If a piece is damaged or missing, the checker draws a circle around the appropriate piece number and identifies it as short or damaged. For example, if pieces 1, 3, and 5 of a five-piece shipment are loaded intact, piece number 2 is damaged, and piece 4 is missing, the tallying sheet would look like this:

DAMAGED SHORT
~~1~~ (2) ~~3~~ (4) 5

Downloaded from http://www.everyspec.com

(3) As a result of marking or a shipping error, two pieces may bear the same number, making one of the pieces excess. In this case, the number of the extra piece will also be recorded on the tally, circled and annotated "over." For example, if the shipment had two pieces labeled with the number 3, the second number would be tallied as follows:

OVER

~~1~~ ~~2~~ ~~3~~ ~~4~~ ~~5~~ (3)

NOTE: When a discrepancy of the type described is detected, the checker should circle blocks 22, 23, and 24 of DD Form 1384, if it is being used as a tally sheet. Boldly drawn circles around these three blocks alert documentation personnel to the fact that a discrepancy exists. The cargo checker, using information on the shipping label, computes the height and cube of cargo on hand and places this information in blocks 44a, b, and c. See Figure 8-14, page 8-26 for examples.

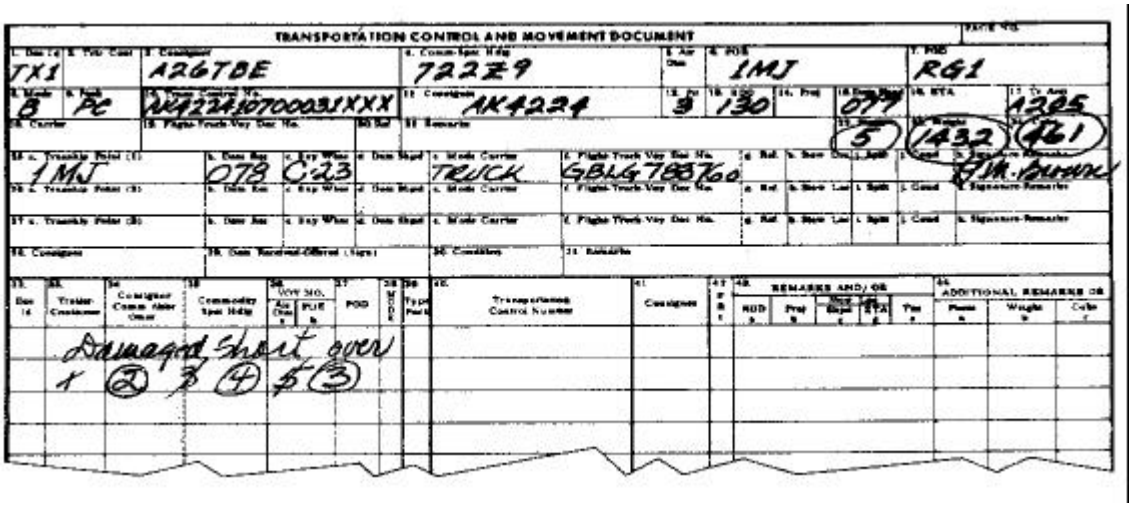

Figure 8-14. Sample portion of DD Form 1384; blocks 22-25 and columns 32-38

b. **Unit Method.** Equipment such as trucks, tanks, MILVANs, SEAVANs, and other large serial-numbered items that are handled separately are usually tallied by the unit methods. The lower portion of the TCMD (columns 32 though 44) contains trailer data to describe the vehicle and include its serial number. Figure 8-15 provides further information.

Downloaded from http://www.everyspec.com

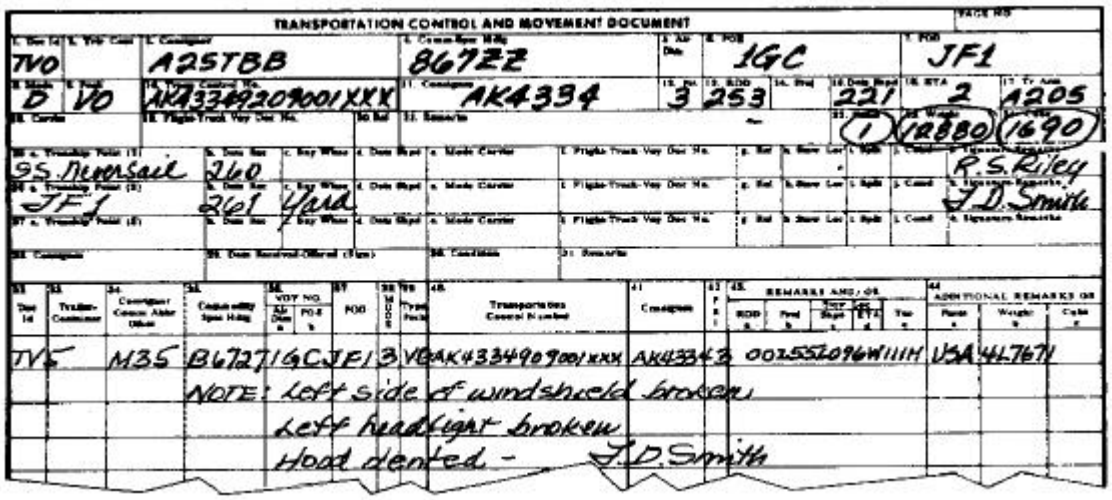

Figure 8-15. Sample portion of DD Form 1384; blocks 22-26 and columns 32-44

(1) The cargo checker compares the serial number stenciled on the vehicle with the serial number recorded in the trailer data line entry. If they correspond, a check mark is placed on the tally to indicate the vehicle has been received.

(2) Under certain circumstances, the description of the item may not be included as a trailer data line entry. In this case, the checker enters such identifying information on the tally.

(3) The checker tallies information (in Figure 8-15, the tally includes "truck cargo, 2 1/2-ton, 6 x 6, USA 4L7671"). This entry constitutes the tally.

NOTE: Enter the same type of information as shown on the bottom of the TCMD (see Figure 8-15).

c. **Block Method.** The block method provides a rapid means of tallying when items of the same commodity are being loaded or unloaded in uniform drafts consisting of an equal number of pieces.

(1) This method requires the cargo checker to determine the number of pieces in each draft, which he records in parentheses in the left margin of the tally sheet. As each draft is transferred, the checker enters a tally mark adjacent to the number. Recording these four vertical marks and one diagonal mark (Figure 8-16) may make a quick determination of the total number of drafts handled.

(2) In Figure 8-16, seven drafts of 48 cases have been tallied, as indicated by six vertical marks and one diagonal tally mark. The number of pieces contained in a partial draft must be counted and added to the tally marks. In this case, the tally totals 382 cases.

Downloaded from http://www.everyspec.com

d. **Straight Method.** When general cargo with different amounts in each draft is involved, the checker cannot use the other three methods, but must use the straight tally method. The straight method requires the checker to make an individual count of each piece in each draft. He enters this count on the tally sheet as each draft is transferred. Refer to Figure 8-17, page 8-28.

Figure 8-16. Sample portion of DD Form 1384; block 25 and columns 32-36

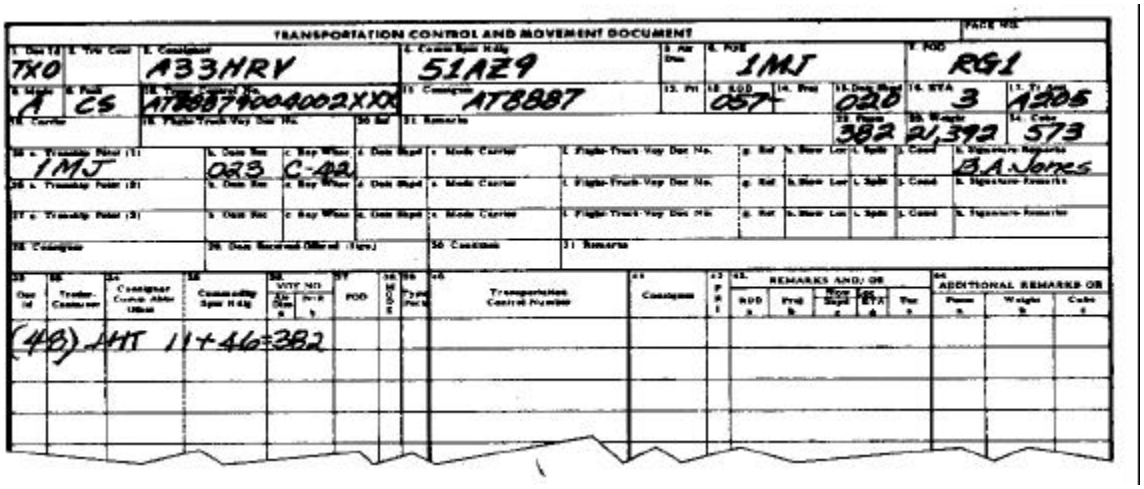

8-15. TALLYING BREAK-BULK CARGO. There are a number of different types of transshipping functions which require the checking and tallying of cargo, including rail, truck, air, and inland barge transfer operations. The unloading of cargo vessels in overseas POD is the function of terminal service companies. Discharge operations at the POD are the largest type of all transshipping functions. To illustrate the use of the DD Form 1384 as a cargo tally sheet, a description of the steps involved in moving break-bulk cargo through an overseas port is provided.

a. **Step 1—Advance Manifest.** Upon completion of vessel loading, the POE transmits the ocean cargo manifest data to the designated POD. The port of discharge uses the advance manifest information to make the TCMD before vessel arrival.

Downloaded from http://www.everyspec.com

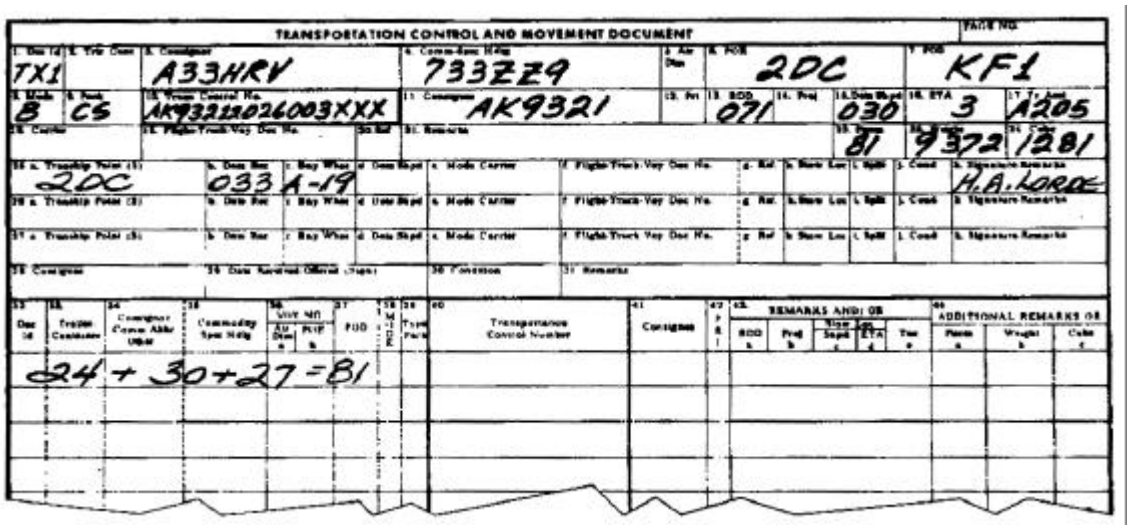

Figure 8-17. Sample portion of DD Form 1384; block 25 and columns 33-37

b. **Step 2—Chief Cargo Checker.** The chief checker distributes the tally sheets (TCMD) to the appropriate hatch checkers aboard vessels just prior to commencement of vessel discharge.

c. **Step 3—Cargo Identification.** As the cargo is discharged from the vessel, the cargo checker identifies the cargo by comparing the TCN which appears on the top line of the address marking with the TCN appearing in block 10 of the TCMD.

d. **Step 4—Tallying Cargo.** Using one of the tallying methods previously discussed, the checker enters his cargo count, discrepancies, and comments in the lower portion of the TCMD, and fills out line 25, blocks a through k.

(1) ***Transship Point.*** When the cargo is being checked into or off a ship, the vessel name or identification number is listed in this block. When cargo is being received into or relocated within the terminal, the appropriate three-position air or ocean terminal designator is entered in block a. If the activity has not been assigned a code, the name of the locality will be spelled out, not coded.

(2) ***Date Received.*** The Julian date that an incoming shipment is received in the terminal and checked off the transport mode is entered into this block.

(3) ***Bay Warehouse.*** The warehouse in which the cargo is stored and the particular bay within that warehouse is inserted in this block. If the cargo is left on the pier, then the word "pier" and pier number will be entered.

(4) ***Date Shipped.*** The Julian date that a shipment is checked out of the terminal is entered into this block.

(5) ***Mode Carrier.*** The entry recorded in this block provides a record of the means by which the shipment departed the terminal. The entry is spelled out in the clear, such as—

Downloaded from http://www.everyspec.com

- Rail.
- Truck.
- Aircraft.
- Barge.

(6) ***Flight-Truck-Voyage Document Number.*** Detailed identification of the carrier is established by the entry recorded in this block. Enter the aircraft flight number, vessel voyage number or unit, and bumper number of military vehicles. When commercial vehicles are used, enter in this block the GBL number which authorized the carrier to transport the shipment.

(7) ***Reference.*** This block is left blank.

(8) ***Stowage Location.*** An entry is required in this block only when cargo is being loaded aboard a ship. The entry will consist of a four-position vessel stowage location code described in DOD 4500.32-R, Appendix B. Until a checker thoroughly learns the 71 elements of this code, it is recommended that they be reproduced and attached to his clipboard along with the tally sheets. An inaccurate entry in this block will be printed on the cargo manifest and other ship's papers and will create difficulties for the discharging terminal.

(9) ***Split.*** This block is left blank.

(10) ***Condition.*** This block is left blank. For cargo checking purpose, a "condition" entry is made in the lower part of the tally sheet.

(11) ***Signature Remarks.*** The cargo checker's signature is entered in this block.

e. **Step 5—TCMD Distribution.** The procedures for TCMD distribution are listed below.

(1) ***Ship side.*** The hatch checker aboard ship records his tally and attaches six carbon copies of the DD Form 1384 to the shipment unit. The seventh copy is retained and turned in to the chief cargo checker.

(2) ***Marshalling yard.*** The shipment checking process is listed below.

(a) As the shipment is placed in a warehouse or other storage area, the in-transit storage checker will use six copies of DD Form 1384 to conduct his check of the cargo, enter his tally and record the appropriate entries in blocks a, b, and c, and then place his signature in block k of line 26. When the in-transit storage checker has completed his tally, he will detach one copy of the tally sheet and secure the remaining five copies to the cargo. The detached copy is turned in to the documentation section, where it is used to update the terminal's cargo inventory record. If a shipment is transferred directly from ship to truck, rail car, or barge, the appropriate information would be recorded in blocks a, d, e, and f. Blocks b and c would be left blank.

(b) When the cargo is loaded aboard the carrier for shipment to the consignee at the last minute, the cargo checker records his tally on the five copies of DD Form 1384 attached to the cargo and enters the appropriate information on line 27. At this point, the

Downloaded from http://www.everyspec.com

terminal policy may require preparation of a new document to be issued to the carrier as a freight waybill. The cargo checker may instead obtain the signature of the carrier, detach one copy of DD Form 1384 to be retained in terminal records, and turn the other copies over to the carrier.

(3) ***Consignee.*** Upon receipt of the shipment by the consignee, it is again checked for quantity and condition and the appropriate information is entered in blocks 28 through 31 of DD Form 1384 by the consignee, with one copy returned to the carrier to be retained as a receipt of delivery.

8-16. TEMPORARY HOLDING AREAS. Temporary holding areas may be needed at certain ports depending on manpower and equipment availability. A temporary holding area is a warehouse or secured area used to store cargo on a temporary basis.

a. A temporary holding area is required when the rate of discharge exceeds the capability of clearance transportation. A covered area is used whenever possible or available. This is especially important if the cargo is subject to weather damage or is expected to remain in the terminal area for extended periods of time.

b. After considering the consignees of goods and the facilities available, the commander of the discharging terminal generally establishes holding areas so goods are segregated by destination and commodity. Segregation by destination is usually the most appropriate method, although incompatible items such as ammunition and fuel are still segregated on a commodity basis for safety reasons.

8-17. CARGO DAMAGE AND LOSS. Cargo handlers must know how to prevent cargo damage and what measures to take if they encounter cargo already damaged. Damage may occur in transit, in handling, or from chafing, crushing, contamination, moisture, or shifting.

a. **Damage in Transit.** Frequently, cargo is damaged in transit before it arrives at the piers. Cargo handlers should inspect the cargo carefully as it arrives. If personnel have any doubt about a package being damaged internally, they should annotate documents accordingly, place the package to one side if possible, and advise their supervisor.

(1) If during loading operations cargo handlers find packages with insufficient packing, or packages that show signs of wear and tear or attempted pilferage, they should return them to the warehouse for disposition. The condition of such cargo almost always worsens during the voyage. It not only arrives at the destination damaged, but it may have damaged adjacent cargo.

(2) Cargo handlers should never repackage security cargo until the security officer has made an investigation and has given permission.

b. **Damage in Handling.** Damage in handling is caused chiefly by exposure to inclement weather conditions, carelessness, and the use of improper gear.

(1) To protect cargo from weather, personnel should cover hatch openings with hatch tents. The tents will also provide protection for the crew working in the hatch. Tarpaulins used to cover the remaining cargo in the square of the hatch do much to reduce damage. However,

Downloaded from http://www.everyspec.com

it is useless for personnel to protect the hatch and the cargo if they allow cargo to remain in the open on the pier after being discharged from the vessel.

(2) Unsuitable or badly adjusted slings may dislocate or break packages and damage their contents. Cargo handlers should take the following precautions when using slings:

- Avoid crushing light or fragile articles in net slings and avoid banging drafts of cargo against the hatch coaming. Few commodities can be handled in net slings without being crushed.
- Avoid building drafts too high. Even though the fragile boxes are placed on top, they may fall when the sling is removed on the pier or in the hold.
- Ensure that slings are securely fastened around the load. Slings placed haphazardly may slip and part, allowing the entire draft to fall to the deck, to the pier, or into the water.
- Avoid careless winch operations, especially when handling fragile cargo. Careless handling of a load may damage the cargo in the sling, the sling itself, or the cargo already stowed.

- Exercise care when using hooks, crowbars, and similar tools. The shipper's marks on boxes, such as THIS SIDE UP and FRAGILE, must be observed.

c. **Damage from Chafing.** Chafing is the wear of cargo caused by friction from rubbing against other objects. Chafing usually results from improper chocking, blocking, and bracing of cargo. On a vessel, cargo damage results if the motion of the vessel causes the pieces of cargo to rub against each other or against projections in the hold. Chafing damage is also caused by dragging cargo over rough spots or over other cargo. Chafing is dangerous if flammable cargo is carried in metal containers, particularly if heat is produced through friction.

d. **Damage from Crushing.** Crushed cases and containers usually are the result of carelessness in slinging, improper dunnaging, or pressure brought about by stowing heavy cargo on top of fragile cargo.

(1) Proper stowage, shoring, and chocking help reduce damage to cargo from crushing.

(2) Studies of packaging have resulted in the reinforcement and general improvement of packages. Most damage is attributed to handling and stowing rather than to the construction of the containers.

e. **Damage from Contamination.** In planning the loading of a ship, personnel should give careful consideration to segregating cargo to avoid contamination damage. Many foodstuffs are contaminated by being put too close to substances such as paint or rubber. Since odors left in the hold of a vessel can contaminate future cargo, the hold must be clean and free from odors before loading.

f. **Damage by Moisture.** Damage caused by moisture is called sweat damage. Condensed moisture may corrode metal and mildew textiles, for example. This type of damage ruins more cargo than any other type. Cargo handlers can reduce or eliminate sweat damage by—

Downloaded from http://www.everyspec.com

- Properly preparing cargo for shipment.
- Properly using dunnage to provide drainage and air circulation.
- Using mechanical ventilation or dehumidifying systems.

A frequent cause of wet cargo is an improperly closed hatch that allows seawater to enter to hold. At times it may be necessary to discharge wet cargo. In this case, responsible personnel should make special provisions for drainage and drying.

g. **Damage from Shifting.** There is always danger that cargo may shift if empty spaces are not shored off adequately. Violent rolling or pitching can cause a few pieces of cargo to break out of stowage and move about freely in the hold. These pieces, in turn, bang against and dislocate other cargo. Serious damage to the cargo and the ship can result. Cargo handlers should take the following precautions to avoid damage from shifting:

- When stowing cargo, avoid leaving empty paces.
- Thoroughly secure and shore all cargo so that it cannot move.
- If cargo is likely to settle, make provisions to secure it after it has settled.

8-18. CARGO SECURITY. The process for cargo security is listed below.

a. **Cargo Security Program.** To minimize pilferage, each military terminal and transfer facility must have a comprehensively developed and continuously improving cargo security program. To be effective, this program should include the following:

(1) A complete study of all aspects of the cargo transfer and in-transit storage operation in order to identify security weaknesses.

(2) Complete instructions in cargo security for all personnel.

(3) Implementation of physical security policies.

(4) Assignment or employment of cargo security.

(5) Use of theft prevention and detection equipment.

b. **Preventive Measures.** It is unlikely that cargo pilferage will ever be completely eliminated. However, private industry, US Army MTMC operated terminals, and other government agencies concerned with cargo security have developed techniques that are effective in reducing pilferage. Some of the preventive measures that may be used in overseas military terminals follow.

(1) ***Security personnel.*** Individuals responsible for implementing preventive measures involving security personnel may—

- Request security assistance from military police.
- Appoint a terminal security officer.

Downloaded from http://www.everyspec.com

- Establish port pilferage prevention and detection teams to monitor the receipt, documentation, handling, storage, and disposition of cargo passing through the terminal.
- Assign guards to all terminal exits.
- Give security personnel advance notice of cargo entering the terminal that will require surveillance and protection.
- Post a security guard or cargo checker at open warehouses and the ship's hatches during lunch and break periods.
- Restrict privately owned vehicles from entering cargo-handling or in-transit storage areas.

(2) ***Fences and gates.*** Personnel implementing preventive measures may—

- Fence the perimeter of the entire terminal with a chain link fence topped by three strands of barbed wire.
- Inspect the fence daily to ensure that there are no openings in it or under it that would permit objects or persons to pass through.
- Maintain separate gates for personnel and vehicle traffic.
- Provide manned gatehouses at all vehicle entrances and exits.
- Clear the area around the gatehouse of any objects that restrict the guard's field of vision.

(3) ***High-value and security cargo.*** Personnel responsible for the protection of high-value and security cargo may—

- Provide a secure cage, crib, or vault in the shipping and receiving area for control of sensitive or high-risk cargo.
- Assign responsibility for receiving, accounting for, and releasing sensitive or high-value cargo to a specific individual.
- Maintain a record of each shipment entering or leaving the security area. The record should include date, time, description of cargo, seal number, identification number of the truck or other equipment making pickup, and name, rank, and organization of the equipment operator.

(4) ***Vehicles.*** Personnel developing preventive measures involving vehicles may—

- Establish a truck control system using gate passes.
- Record the date and hour of release on DD Form 1384 (TCMD), a gate pass, or other control documents so that gate security personnel can detect abnormal time lags in travel from the loading area to the gate.
- Designate a responsible person to inspect the interior or each truck after unloading.
- Spot trucks at warehouses only after cargo-handling personnel are available.
- Compare the TCMD or other document with loaded cargo while spot-checking trucks.
- Establish designated parking areas for privately owned vehicles.

Downloaded from http://www.everyspec.com

(5) ***Locks and keys.*** As pertains to locks and keys, personnel involved with security measures may—

- Establish and maintain strict control and accountability procedures for all keys to containers, security areas, and other locked cargo areas.
- Issue master keys only on a need-to-have basis.
- Number all keys and obtain signatures of the recipients when issued.
- Recover issued keys from person being transferred or terminated.
- Periodically change padlocks on security lockers; change lock immediately if a key is reported missing.

(6) ***Miscellaneous.*** Personnel implementing preventive measures should follow these general rules:

- Always have a cargo checker during cargo transfer operations.
- Close and lock warehouse doors during lunch and break periods.
- In addition to signing each TCMD, SF 1103(US GBL), or other cargo document, cargo checkers must print their names or use self-inking identification stamps on these document to eliminate the problem of illegible signatures.
- Keep doors of rail cars containing cargo closed, except when loading or unloading.
- When possible, secure MILVANs and commercial containers by butting their doors against each other.

8-19. SAFETY. Safety is the responsibility of every individual involved in military cargo handling. Observance of simple safety rules will prevent many accidents.

a. **Boarding and Leaving a Ship.** The safest way to board or leave a ship is by a properly secured gangway or ladder. Use a rope ladder, commonly called a Jacob's ladder, when going over the side of a ship to a barge or a lighter. The Jacob's ladder must be in good condition, sufficiently long, and properly made. Grasp the ladder by the sides, not by the rungs or steps; this decreases the likelihood of falling if a step gives way. The crew should attempt to board the ladder at the peak of the swell. Be careful not to overload the gangway or ladder. Do not take shortcuts over the side to the pier or lighter using skids or riding a draft or hook, except in emergencies.

b. **Decks and Hatches.** To maintain decks and hatches, the below information is provided.

(1) Decks must be kept reasonably clean and clear of gear and equipment that might cause persons to trip and fall. In order to accomplish this, crew members should—

- Stack hatch covers at least 3 feet from the coaming and secure them so that they cannot fall into the hatch. In the between decks, the covers should be stacked as far from the hatch opening as possible.
- Stow wire, topping lifts, spare falls, beam bridles, hatch tarpaulins, and other gear where personnel will not trip over them.
- Coil hauling parts of guy tackles or other rope where they will not be damaged by cargo, gear, or hot steam pipes.

Downloaded from http://www.everyspec.com

- Not stow excessive amounts of dunnage on deck. When a small quantity must be on hand, personnel should stow it in slings so that it cannot be knocked over and will not inhibit crew passage around the deck
- Place beams outboard against the rail or bulwarks. Hatch beams should lie on their sides or hard against the bulwarks so that they cannot fall or be knocked over.

(2) Beam bridle slings must have taglines of sufficient length so that crew members may walk around the hatch to guide the beam while swinging.

(3) When two compartments are being worked in the same hatch at the same time, workers should rig a lifeline to prevent crew members from stepping or backing off into the lower deck.

(4) Crew members should not be allowed to walk on improperly fitted or damaged hatch covers. Report the damage or improper fit to a ship's officer so that the unsafe conditions can be corrected as soon as possible.

(5) Adequate lighting should be provided in the hold and on deck at all times. Entering the ship's hold or other dark compartments without sufficient natural or electric light is prohibited; using matches or open lights is strictly forbidden.

c. **Handling Lines on Ships, Lighters, and Small Craft.** The ways to handle lines are listed below.

(1) Clear mooring cleats of dunnage, cargo, and any material that might interfere with the proper handling of lines.

(2) Stand well away from a line under strain and face in the direction of the strain.

Section III. Loading Phase of RO/RO Operations

8-20. RO/RO SYSTEM. RO/RO describes the system in which fully loaded vehicles are driven onto a specially designed ship, parked in the hold for sea voyage, and then driven ashore at the overseas destination. If necessary, RO/RO ships can be used to carry general cargo. They can load and discharge cargo with their own cargo-handling gear.

a. The FSS is the major class of RO/RO ship used in both fixed-port and LOTS operation, so it will be used in the rest of this chapter in the description of RO/RO operation.

b. The key to a rapid loadout of the FSS is developing a plan that maximizes the ship's capabilities to conduct simultaneous operations. The plan must focus on the loading of the aft end. This is the most time-consuming section of the ship to load and operations in this section determine the length of time the ship will remain in port. Planners must make certain that the ship is loaded in a way which ensures a rapid discharge. Do not take shortcuts during the loading operation that would increase the time it takes for discharging the ship. Conversely, any action that might decrease the time for discharging the ship should be taken at the SPOE.

Downloaded from http://www.everyspec.com

8-21. RO/RO VEHICLE OPERATIONS PROCEDURES. When moving vehicles on or off the ship, follow these rules:

- After starting the vehicle, immediately perform a brake check by driving forward several feet and then applying the brakes.
- Only qualified and screened drivers are permitted to operate vehicles.
- All personnel working in vehicle operating areas MUST wear hearing protection.
- Do not operate (move) vehicles about the ship without a vehicle director present. Vehicle director assistants shall be stationed at locations where potential traffic hazards exist, such as intersections, ramp approaches, or departure points.
- Do not back vehicles without supervision from ground guides stationed to one side and to the rear of the vehicle being backed.
- Use traffic guides at ramps and watertight doors to clear the area of unnecessary personnel, and to warn personnel of oncoming vehicles, when moving vehicles through the various levels and holds of the ship.
- Operate vehicles with lights on.
- Only one vehicle may transit a ramp at any time.
- Secure cargo loaded within vehicles to prevent movement and shifting.
- Start vehicles only when directed by vehicle director or other competent authority.
- Do not leave vehicle engines running unattended. Vehicles will not exceed 5 miles per hour while moving about the ship.
- Operate vehicles in low range only and, when possible, in maximum wheel drive mode.
- Remain clear of engine exhaust.
- Take care to avoid the presence of loose paper within the RO/RO areas. These papers can be sucked into the ventilation system, blocking airflow and allowing the buildup of noxious gases.

WARNING: It is possible that safe ventilation levels will be exceeded during RO/RO operations of gas turbine powered M-l tanks. To prevent this from occurring, never have more than two M-1 tanks idling, one M-1 tank maneuvering, and one M-1 tank climbing a ramp on any two adjacent decks in two adjacent holds.

- Stand clear of vehicle ramps while vehicles are traversing them.
- Stay clear of space between moving vehicles and other vehicles, fixed objects, and bulkheads.
- Do not remove vehicle lashing assemblies until ensuring that brakes are set and personnel are clear of vehicle path.
- Make certain that the watertight door sill protectors are put in place.

8-22. LIFT-ON OPERATIONS. The methods for lifting cargo aboard ship are discussed below.

a. **Location.** Cargo can be lifted aboard the FSS at three separate locations: the forward section (requires shore- or barge-based cranes), the midsection, and the aft section. For the ship to be loaded most efficiently, conduct operations at all three locations at the same time.

b. **Cargo Flow.** Cargo to be lifted aboard flows from the pickup point on the pier (or lighter) to the stow location aboard ship. If the stow location is not within the operating radius of

Downloaded from http://www.everyspec.com

the crane, move the cargo to that location by alternate means. Tow aircraft into position with the ship's organic forklifts, or have aircraft crews use helicopter handling equipment. Drive, tow, or push vehicles into position. Position nonwheeled equipment, palletized cargo, bulk cargo, and so forth, by forklift or pallet jacks. Position containers with the ship's container lift truck.

c. **Crane Rerigging.** Planners and operators must minimize the number of times the cranes are rigged for tandem operations, since it takes about 60 minutes for each mode change. Also, when the cranes are married, their overall productivity is cut in half. Avoid rerigging, when possible, by—

- Grouping heavy lifts together.
- Lifting light vehicles in the tandem mode.
- This is better than delaying loading by switching to the single mode and then back to tandem.

8-23. AFT SECTION LIFT-ON OPERATIONS. The aft section (see Figure 8-18) carries flatracks, sea sheds, and containers, and is the most time-consuming to load. Operations in this section receive the highest priority and begin as soon as possible after the ship arrives in port, even before emplacement of the PVR.

NOTE: For clarity in load planning, holds 5, 6 and 7F will be referred to as the forward side of the aft end, and holds 7A, 8F, and 8A will be referred to as the aft side.

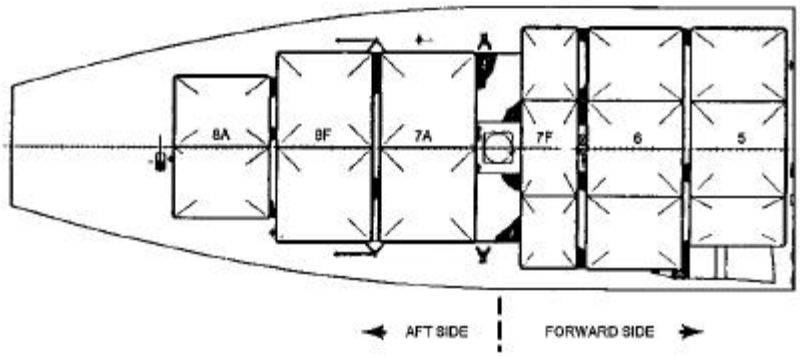

Figure 8-18. Aft section (overhead view)

a. **Determination of Long Side.** The first step in planning break-bulk loading operations is determining which hold takes the longest to load. For an FSS, one crane is used to service three holds; therefore, instead of determining the long hold, the planner must determine the long side. In most cases, where one or two pieces of cargo are placed in each flatrack and sea shed, the forward side takes the longest time. However, if more than one flatrack is required to stow one piece of cargo (for example, two M-60s are stowed in three flatracks) or if all flatracks and sea sheds are not used, this may not be the case. Once the long side has been determined, start loading the flatracks and sea sheds within this side as soon as possible. If additional lift assets are available to augment the ship's crane, employ them on the long side to reduce the ship's overall loading time.

b. **General Guidance for Aft Section.** When working a hold in the aft section, it is most effective to remove all the hatch covers from the hold at the same time. By doing this and working across the hold, a tier at a time, less time will be spent changing slings. Hatch covers can be

Downloaded from http://www.everyspec.com

stacked on top of each other. Up to two hatch covers may be stacked upon a cover already in place. If the vessel is instream, the removed hatch covers should be secured in place with 70,000-pound capacity lashings.

(1) When the ship arrives in the port for loading, the sea shed floors will normally be in the open position. If not, it is important that members of the ship's crew are standing by to begin the time-consuming process of opening the sea shed floors before working holds 5 or 8A. It takes between 10 and 15 minutes to open the floors on each sea shed. (Opening of the sea shed floors is done by the ship's personnel.)

(2) Flatrack placement and handling provides one of the greatest challenges. Almost all cargo operations on the aft end involve the removal of empty flatracks from the upper tiers so cargo can be placed into the bottom tier of flatracks. Then the empty flatracks are replaced a tier at a time so they can also be loaded with cargo.

(a) If possible, place empty flatracks on the (MDA) instead of the pier to save time. When removing the flatracks from their cells and placing them on the ship's deck or the pier, use dunnage to prevent damaging their corner guides. One method of stacking the flatracks (Figure 8-19) is to place three of them side by side on top of railroad ties or other suitable dunnage. Then, place these additional flatracks perpendicular to and on top of the first three flatracks. This method uses the pier or deck space most efficiently.

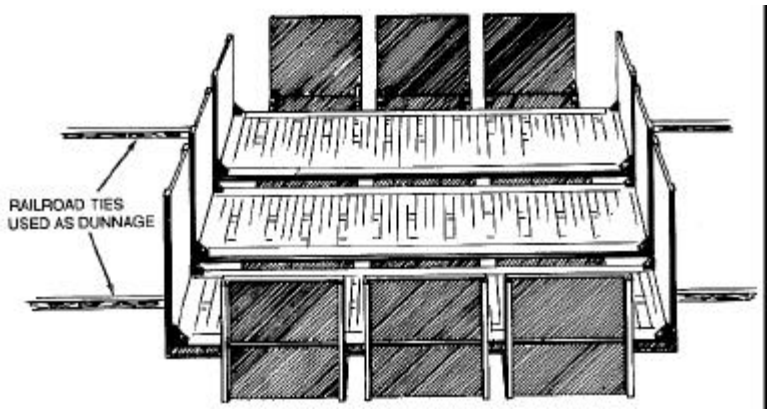

Figure 8-19. Flatrack stacking method

(b) Another method of handling flatracks is to place several on the pier at a time and use shore-based MHE to load cargo into them. This method is not very efficient because the flatrack can handle only one-fourth the amount of cargo when it is to be lifted, compared with when it is already within the cell. Also, loaded flatracks must be lifted with the 35-foot spreader, which is very difficult to connect and also requires rerigging. Empty flatracks can be moved with a four-legged sling set.

(3) MSC policy requires **all** vehicles to be oriented fore and aft.

c. **Recommended Sequence for Loading Aft Holds.** The order in which each aft hold is loaded is discussed below.

(1) If the forward side is determined to be the long side, the hold loading sequence should be 7F, 6, and 5. This sequence is recommended because when the aft side is loaded, only hold 5 on the forward side still requires loading. Vehicles can be driven through the vehicular

Downloaded from http://www.everyspec.com

passageway onto the MDA and over to the aft side, for lashing onto the hatch covers, without interfering with the lift-on of cargo into hold 5 (Figure 8-20, page 8-40). The loading sequence on the aft side should be 8A, 8F, and 7A. This sequence eliminates the possibility of working two adjacent holds at the same time, which in turn reduces congestion on the pier at the pickup points. If additional lift assets are available, use them to load hold 5 while the ship's cranes load hold 7F.

(2) If the aft side is determined to be the long side, the hold loading sequence should be 7A, 8F, and 8A. This sequence allows vehicles to be driven onto and lashed down as far aft as 7A (as soon as operations cease on the forward side) without interfering with lift-on operations into hold 8A (Figure 8-21, page 8-40). The sequence on the forward side should be holds 5, 6, and 7F. If additional lift assets are available, use them to load hold 8A while the ship's crane loads hold 7A. Table 8-1 gives the recommended hold loading sequence for forward and aft long sides.

Table 8-1. Recommended hold loading sequence

Hold	Forward Side "Long"	Aft Side "Long"
5	3	1
6	2	2
7F	1	3
7A	3	1
8F	2	2
8A	1	3

d. **Aft Hold Loading Strategy.** Methods for loading each hold are discussed in detail in the following paragraphs.

(1) ***Hold 5.*** Remove both hatch covers and place them on top of hold 7F. Remove the three flatracks from the top tier and place them on the top of hold 6. Load cargo into the sea sheds on the bottom tier. As soon as they have been loaded, the ship's crew will start closing the floors. Lashing crews can continue the lashing process after the floors have been closed. Lashing crews enter or depart the individual sea shed using the sea shed's vertical access ladders. While the floors are being closed, the crane can begin loading cargo into the flatracks on the bottom tier. Once completed, reload the empty flatracks into the top tier of the hold. Next, load cargo into these flatracks. By this time, the sea shed doors should be closed and ready to accept cargo. Complete loading these sea sheds and replace the hatches.

Downloaded from http://www.everyspec.com

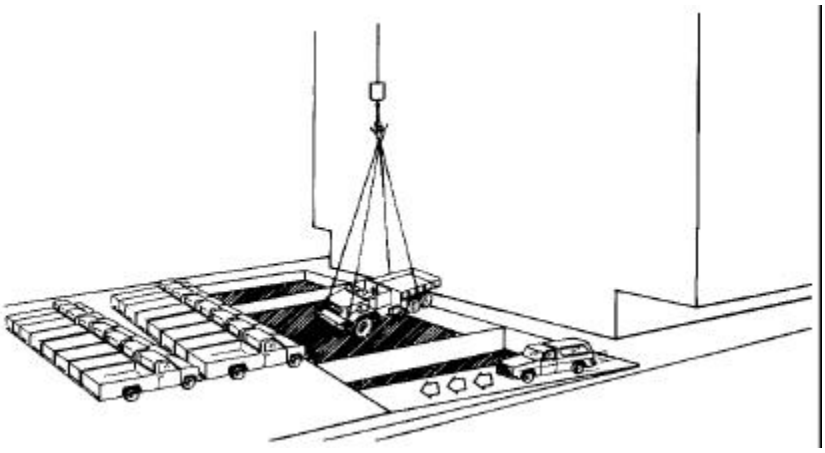

Figure 8-20. Simultaneous operations, lift-on into hold 5 and roll-on onto MDA

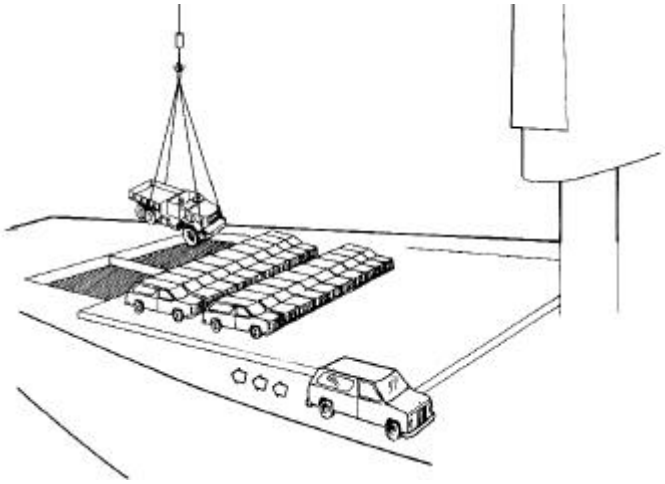

Figure 8-21. Simultaneous operations, lift-on into hold 8A and roll-on onto MDA

(2) ***Hold 6.*** There are three separate methods of loading hold 6.

(a) *Hatch square method.* This method of loading hold 6 is the most desirable because it takes the least amount of time. It consists of lowering vehicles through the hatch square (created by removing the four center flatracks) and then moving them to the wings by jockeying them fore and aft (Figure 8-22). This method can only be employed with certain cargo mixes. The vehicles that must be moved to the wings cannot be too long to maneuver fore and aft within the confines of a 35-foot flatrack. The longest vehicles capable of doing this are 2 1/2-ton cargo trucks (without winches). The flatracks in the hatch square and on the top tier can be loaded with any vehicle since the vehicle can lift straight out of the flatrack. The required cargo mix is shown in Figure 8-23. The steps for loading hold 6 by the hatch square method follow:

Downloaded from http://www.everyspec.com

STEP 1. Remove the hatch covers and the four flatracks from the top two tiers of the two center cells. Place the hatch covers and the empty flatracks on top of holds 6 and 7F. Lift vehicles into the bottom tier of the hatch square. Once the lifting slings have been removed, drive the vehicles out to the wings of the hold and maneuver into a fore-and-aft position for stowage. Continue this until both wings have been loaded. Lower cargo directly into the flatracks within the hatch square.

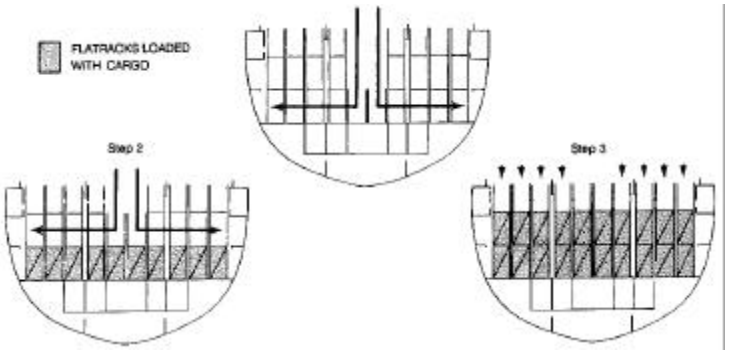

Figure 8-22. Hold 6 – hatch square loading method

STEP 2. Once the entire lower tier has been loaded, lower two empty flatracks into the center cells of the middle tier and continue operations in the same manner as on the lower tier.

STEP 3. Lower vehicles to be stowed on the top tier directly into the appropriate flatrack. Then replace hatch covers.

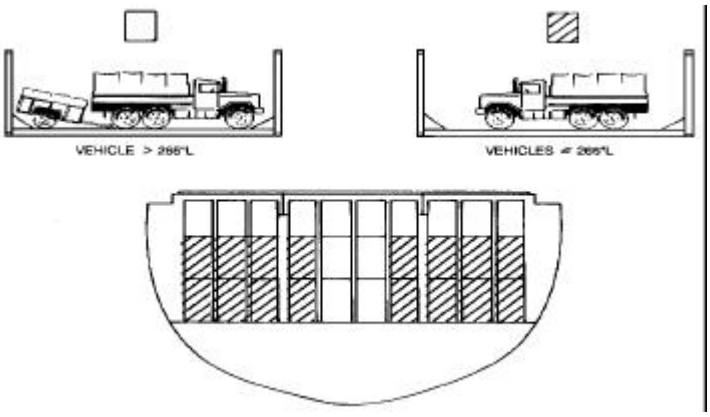

Figure 8-23. Required cargo mix for hold 6 – hatch square method

(b) *Alternating cells method.* This method (also known as Rubik's Cube) can be used if a vehicle and trailer or long pieces of cargo are to be stowed in every flatrack (Figure 8-24, page 8-42). Using this method reduces the number of empty flatrack lifts and reduces the amount of space required to temporarily store empty flatracks. However, the disadvantages of this method are—

- The number of required sling changes increases and offsets most of the time saved by reducing empty flatrack moves. The number of sling changes required depends on whether one set of slings can be used for all cargo stowed on the same tier.
- At the end of the loading process the top two tiers of flatracks are shifted around, with the shorter flatracks in the middle tier instead of on the top tier. This means that the ship's longitudinal beams will obstruct the athwartship movement of vehicles on the top tier.

Downloaded from http://www.everyspec.com

However, as long as the ship is discharged in the same manner as it is loaded the inability of vehicles to move athwartship on the top tier will not adversely affect the discharge operation. Also, after the hold has been discharged with this method, the flatracks will be in the original position. Loading instructions for the alternating cells method follow:

STEP 1. Remove all three hatch covers and place them on top of hold 5 (two are placed on top of the port hatch and one is placed on top of the center hatch). Lift out the top two tiers of the empty flatracks under the port section of hold 6 and place them on top of 7F.

STEP 2. Load the bottom tier with cargo. Lift three empty flatracks out of the center section and place them into port section.

STEP 3. Load these three flatracks with cargo. Transfer three more empty flatracks from the center section and place them in the port section.

STEP 4. Load cargo into the flatracks on the bottom tier of the center section and the top tier of the port section. Transfer three empty flatracks from the top tier to the center section.

STEP 5. Load these three flatracks with cargo. Transfer three empty flatracks from the middle tier to the top tier of the center section.

STEP 6. Load these three flatracks along with those on the bottom tier with cargo. Transfer the last empty flatrack on the top tier to the middle tier, and transfer the last empty 15-foot high flatrack on the middle tier to the top of hold 7F. Transfer two 12-foot high flatracks from hold 7F to the middle tier of the starboard section.

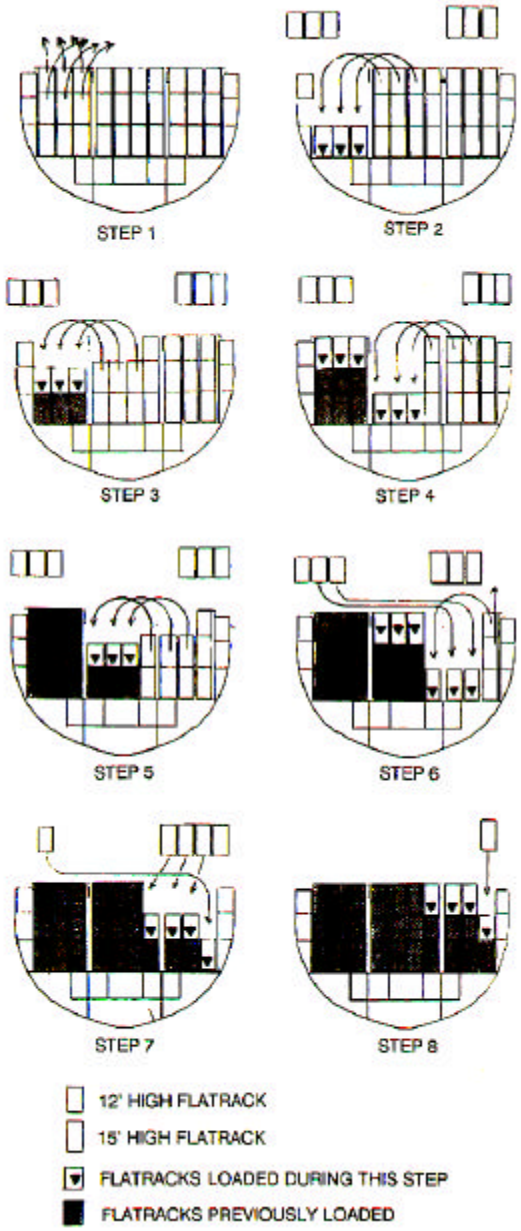

Figure 8-24. Hold 6 – alternating cells loading methods

STEP 7. Load the last empty flatrack on the bottom tier and the three empty flatracks now on the middle tier with cargo. Load the last 12-foot high flatracks from the top of hold 7F in the middle tier and transfer three of the 15-foot high flatracks to the top tier.

Downloaded from http://www.everyspec.com

STEP 8. Load these empty flatracks with cargo. Transfer the remaining 15-foot high flatrack from the top of hold 7F into the top tier and load with cargo. Replace all hatch covers.

(c) *Conventional method*. This method is the least desirable because it requires the most time and deck and pier space. The recommended loading procedures for this method are as follows:

STEP 1. Remove all three hatch covers and place on hold 5 in the same manner as above.

STEP 2. Remove the two tiers of empty flatracks. Place as many flatracks as possible on top of hold 7F and the remainder on the pier.

STEP 3. Load the bottom tier of flatracks with cargo and then reload empty flatracks into the second tier.

STEP 4. Load these flatracks with cargo and reload empty flatracks into the top tier.

STEP 5. Load cargo into these flatracks and replace the hatches.

(3) ***Hold 7F.*** This hold can contain 20-foot commercial flatracks or 20-foot containers. No special strategy exists for its loading, other than to remove all of the hatch covers before starting lift-on operations.

(4) ***Holds 7A and 8F.*** These holds are laid out similarly and can be loaded using the conventional and hatch square methods. The hatch square method of loading these holds is shown in Figure 8-25 (the required stow mix for the hatch loading method is shown in Figure 8-26, page 8-44).

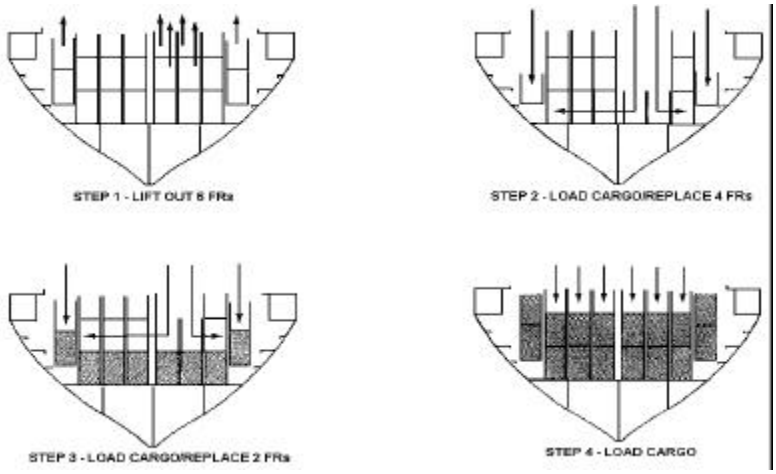

Figure 8-25. Holds 7A and 8F – hatch square loading method

(5) ***Hold 8A.*** When loading hold 8A, remove both hatches and load the bottom tier of sea sheds. Close the sea shed floors and then load the top tier. Replace the hatches.

Downloaded from http://www.everyspec.com

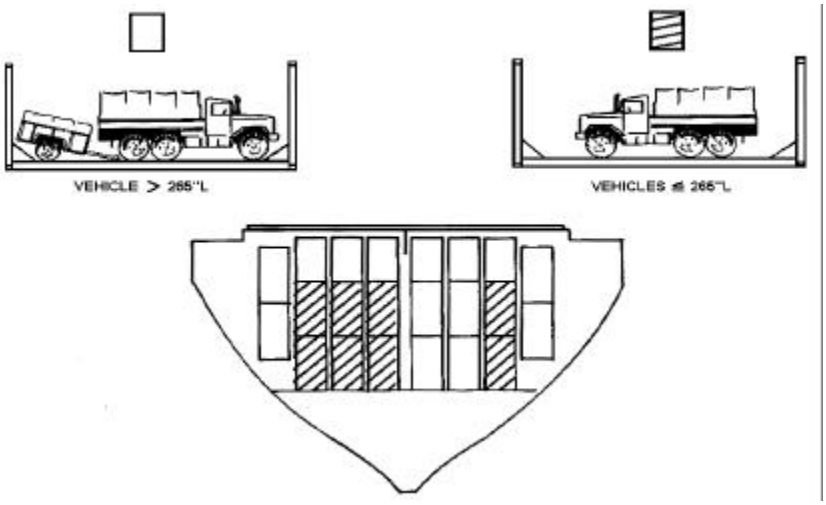

Figure 8-26. Required cargo mix for holds 7A and 8F – hatch square method

8-24. MIDSECTION LIFT-ON OPERATIONS. Lift-on operations in the midsection of the ship include loading cargo into holds 2 and 3, as well as into the other deck. This section identifies the recommended strategy for using the midship cranes. For illustration purposes, assume that helicopters will be stowed on "A" deck in hold 2, and CONEXs will be stowed on the weather deck, aft of the cranes. References to the forward and aft cranes concern the two cranes on the forward crane pedestal.

a. The first priority of the forward crane after the ship has docked is the emplacement of the PVR. This operation takes between 15 and 45 minutes (depending on the experience of the crew); do not use the aft crane to load cargo until this operation has been completed. After the forward crane has completed emplacing the PVR, its next priority will be to open the hatch cover over hold 2 and the hatch covers on as many decks below as necessary. Use the aft crane to open the hatch cover over hold 3 and the hatch covers below if necessary. All of these functions must be conducted by the ship's crew. After they are accomplished, commercial or military cargo handlers can begin operating the cranes.

b. The next operation for the forward crane is loading helicopters into hold 2. On past exercises, aircraft crews have supervised the overall operation and performed tagline handling and final shipboard positioning procedures. Lower helicopters into the center of the hatch square and remove the slings. Then, wheel the aircraft into the forward portion of "A" deck and shift it into final stow position with the ship's helicopter handling equipment. Place the last aircraft loaded in the square of the hold and do not shift it. This precludes vehicles from being stowed in the hatch square and blocking helicopter discharge operations.

c. The aft crane can simultaneously lift cargo into hold 3 and onto the weather deck. Procure special slings which allow the lifting of two to three CONEXs at a time. Lower the CONEXs onto the weather deck and use a forklift to place them on dunnage in their final stow

Downloaded from http://www.everyspec.com

location. However, avoid placing them on top of the hydraulic ramp and leave space around them so that vehicles stowed on the weather deck can be rolled on and off.

d. Lift heavy vehicles, exceeding 200 pounds psf, into hold 3 and place them on "A" deck.

NOTE: This is recommended only when helicopters have been stowed in hold 2. If this is not the case, then stow heavy disabled vehicles in hold 2.

e. Other disabled vehicles (incapable of being towed on), with a psf loading less than or equal to 200, can be lifted on and placed anywhere on the weather deck as long as they do not obstruct the RO/RO flow. These are the most desirable locations for disabled vehicles because their discharge will not have an adverse impact on the time it takes to discharge the rest of the ship. This is because the cranes in the midsection are used less than those on the aft end.

8-25. FORWARD SECTION LIFT-ON OPERATIONS. Lift-on operations in the forward section are limited to cargo being placed on the 37-foot flat and on the hatch cover at the main deck level. Cargo on the second deck can be driven on. Lift-on operations in this section can be started almost anytime during the vessel loading because they will not interfere with the cargo loading in other sections. Two methods exist for loading cargo into the 37-foot flat.

- The first method uses a nonorganic crane (shore-based or barge-mounted) to lift cargo into the hold through the hatch covers. From there the cargo is placed in its stow position by forklifts. This is the only method for loading cargo that is to be stowed on the main deck hatch cover.
- The second method involves using a forklift or cargo vehicle (ideally a tractor and flatbed trailer combination) to transport palletized cargo to the second deck. The pallets are then lifted by ship's forklifts and transferred to the 37-foot flat by the high-reach forklift permanently stowed on the deck (Figure 8-27).

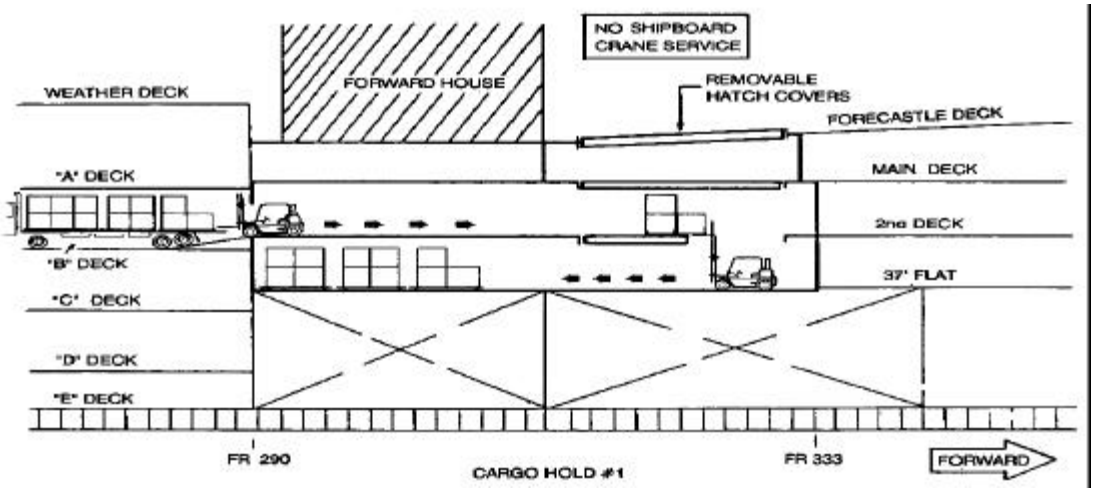

Figure 8-27. Alternate loading method for 37-foot flat

NOTE: Cargo stowed on either the hatch covers or the 37-foot flat may have to be blocked and braced into position due to the possible lack of tie-down fittings in these areas.

Downloaded from http://www.everyspec.com

8-26. ROLL-ON OPERATIONS. The roll-on loading pattern must be considered during roll-on operations. Roll-on access to the ship is gained through the port and starboard side ports in hold 3 on "B" deck. Vehicles travel from the pier, up the PVR, and through the side port door.

a. Vehicles to be stowed on lower decks proceed from the side port, through the watertight door in bulkhead 198 (starboard), to the ramp down in hold 4 port side. Vehicles must make a U-turn at the aft end of hold 4 to enter the ramp and at the foot of the ramp on each successive deck.

b. Vehicles to be stowed on the upper decks proceed from the side port, through the watertight door in bulkhead 198 (port), and up the internal ramp to "A" deck. At this point, vehicles to be stowed on the MDA proceed to the starboard aft end of "A" deck, through the watertight door in frame 146, and through the vehicular passageway out onto the MDA. (This route, from the side port door to the MDA, is also known as the critical path because it must be left open until the MDA has been filled with vehicles (Figure 8-28). Vehicles to be stowed on the weather deck will make a U-turn and proceed up the hydraulic ramp to the weather deck.

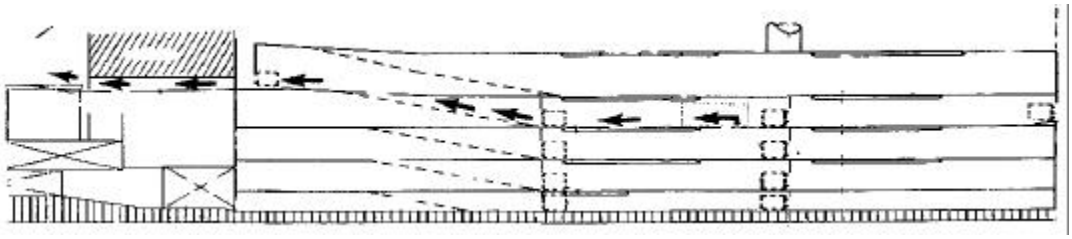

Figure 8-28. Critical path

8-27. ROLL-ON LOADING SEQUENCE. The recommended order of roll-on loading, by deck, is as follows:

STEP	DECKS
1	"E" Deck and Weather Deck
2	"D" Deck and "A" Deck
3	"C" Deck
4	"B" Deck
5	Main Deck Aft

NOTE: The critical path, shown in Figure 8-28, should be left clear until the hatch covers on the aft end have been closed and vehicles have been rolled onto the MDA. Then the path can be filled with vehicles starting from the vehicular passageway and working forward and below.

a. **"E" Deck.** The recommended order of loading is discussed below. Figure 8-29 shows the indicated routes.

(1) ***Route 1.*** The vehicle leaving the ramp at "E" Deck travels through the watertight door on the port side at frame 198. The vehicle follows a circular course around the deck and through the watertight door at frame 198 on the starboard side. This permits the loading of vehicles in the cargo area between frames 142 and 198 (the aft third of the deck). Stow the first

Downloaded from http://www.everyspec.com

vehicle under the ramp, and subsequent vehicles outward from there. Then close and secure the watertight door at frame 198 on the starboard side.

(2) ***Route 2.*** At the same time, alternate vehicles leaving the ramp travel through the watertight door at frames 198 and 242 on the port side. These vehicles then travel to the cargo area between frames 242 and 290 (the forward third of the deck). Stow the first vehicle in the aft starboard position of the cargo area and load the starboard side first. Then close and secure the watertight door at frame 242. This sequence permits two lashing crews to work simultaneously, one forward and the other aft.

(3) ***Route 3.*** Once the forward and aft sections of the deck have been loaded and secured, the middle section is loaded. Vehicles leaving the ramp travel through the watertight door on the port side at frame 198. The vehicles follow a circular path around the centerline box columns to the starboard aft side of the cargo area. Stow the first vehicle at the starboard aft side of the area, and subsequent vehicles outward from there.

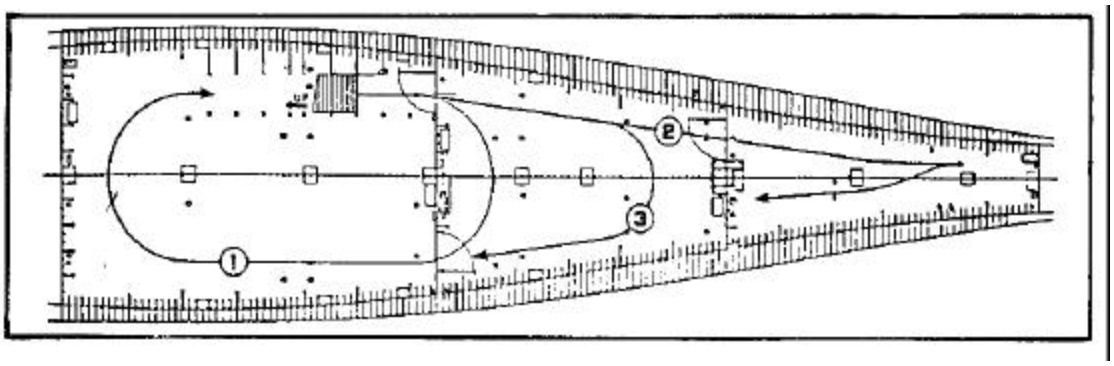

Figure 8-29. RO/RO Flow – "E" Deck

b. **Weather Deck.** The recommended order of loading is discussed below. Figure 8-30 shows the indicated routes.

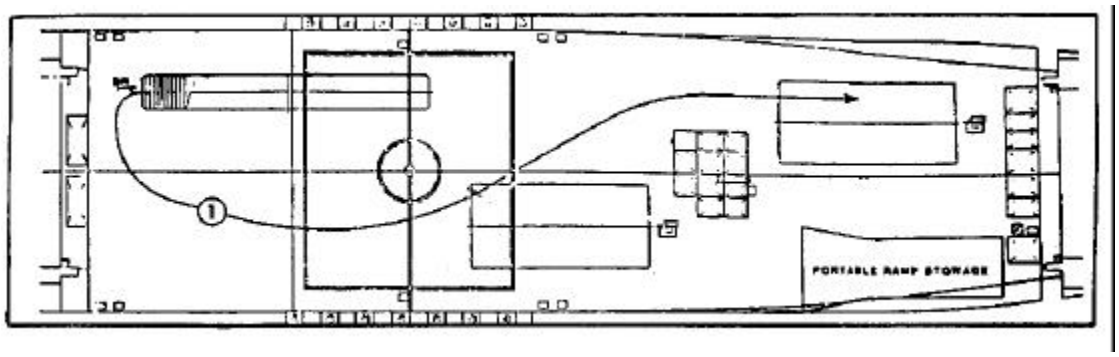

Figure 8-30. RO/RO Flow – Weather Deck

(1) Once vehicles arrive at the top of the hydraulic ramp, they should follow a circular course and continue forward. Stow the first vehicle as far forward as possible on the port side, and the remaining vehicles outward from there.

Downloaded from http://www.everyspec.com

(2) Since this deck is usually loaded first, do not stow vehicles on top of the hatch covers if lifting cargo into the lower holds. Stow the first vehicles driven onto this deck as close as possible to the hatch openings (leaving enough space open for handling taglines, and opening and closing the hatch covers). Leave space clear for cargo to be lifted aboard and stowed on the weather deck (such as CONEXs and palletized cargo).

(3) Leave space on this deck for deadlined vehicles. It is better to leave too much space for these purposes than not enough, because excess space can be filled toward the end of the load by lift-on of vehicles.

c. **"D" Deck.** The recommended order of loading is discussed below. Figure 8-31 shows the indicated routes.

(1) ***Route 1.*** The vehicle leaving the ramp at "D" deck travels through the watertight door at frames 198 and 242 on the port side. The vehicle follows a circular course around the deck. The vehicle then travels through the watertight door at frame 198 on the starboard side. This permits the loading of vehicles in the cargo area between frames 142 and 198 (the aft third of the deck). Stow the first vehicles on the down portion of the ramp.

(2) ***Route 2.*** At the same time alternate vehicles leaving the ramp travel through the watertight door at frames 198 and 242 on the port side. The vehicles then travel to the cargo area between frames 242 and 290 (the forward third of the deck). Place the first vehicle at the aft starboard position in the cargo area and load the starboard side first. Then close and secure the watertight door at frame 242. This sequence permits two lashing crews to work simultaneously, one forward and the other aft.

(3) ***Route 3.*** Once the forward and aft sections of the deck have been loaded and secured, the middle section is loaded. Vehicles leaving the ramp travel through the watertight door on the port side at frame 198. These vehicles then follow a circular path around the centerline box columns to the starboard aft side of the cargo area. Stow the first vehicle at the starboard aft side of the area, and subsequent vehicles outward from there.

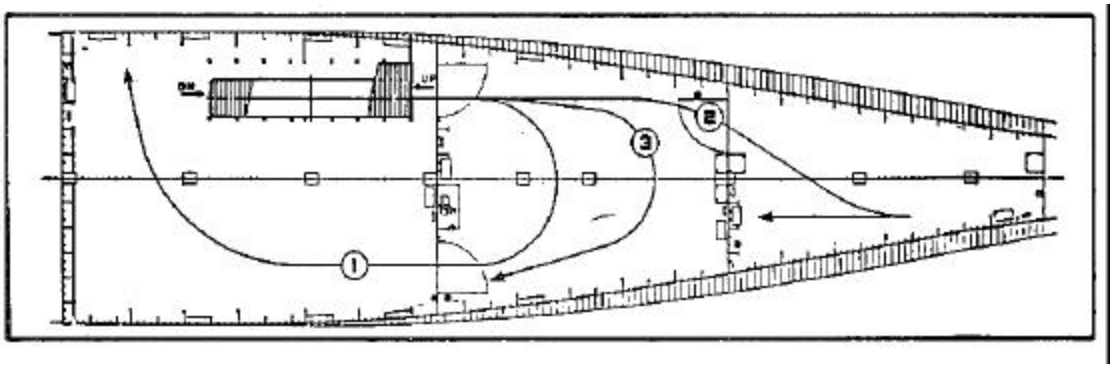

Figure 8-31. RO/RO Flow – "D" Deck

d. **"A" Deck and Main Deck Aft.** The recommended order of loading is discussed below. Figure 8-32 and Figure 8-35, page 8-51 shows the indicated routes.

Downloaded from http://www.everyspec.com

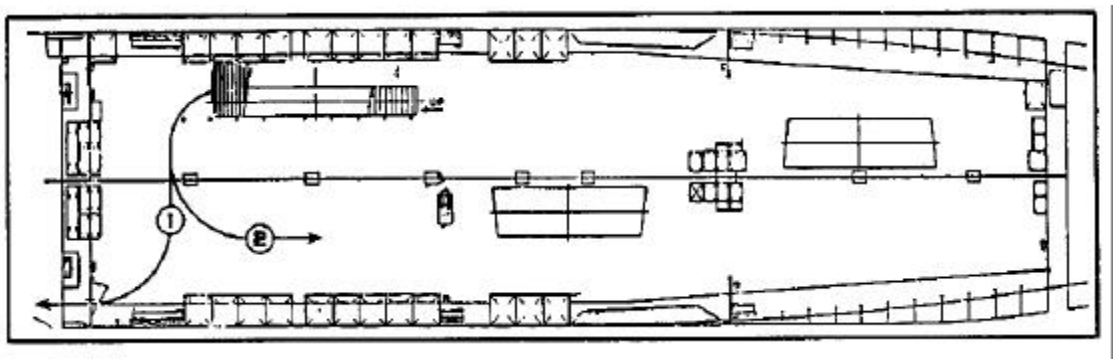

Figure 8-32. RO/RO Flow – "A" Deck

(1) ***Route 1.*** Vehicles entering "A" deck should follow a circular course and continue forward. Stow the first vehicle as far forward as possible, and the remaining ones outward from that point. If driving vehicles onto the MDA, leave route 2 open until that operation is complete.

(2) ***Route 2 (also known as the critical path).*** Vehicles to be stowed on the MDA should turn left after arriving on "A" deck. Vehicles then turn right through the starboard aft watertight door and continue through the vehicular passageway onto the MDA.

(a) To reduce the ship's overall loading time, drive some vehicles out onto the MDA and lash them down while lift-on operations are being performed. Carefully coordinate lift-on operations. Do not drive vehicles under suspended loads. The roll-on operations should never interfere with lift-on operations.

(b) If lift-on operations on the aft side have ceased but continue in hold 5, drive the first vehicle onto the port aft corner of the hatch cover on hold 8A. Stow subsequent vehicles forward from there to hold 6. At that point, cease roll-on operations until the hatch cover to hold 5 has been replaced. Then stow the next vehicle on the port forward corner of hold 5, and subsequent vehicles aft from there.

(c) If lift-on operations have ceased on the forward side but continue in hold 8A, stow the first vehicle on the port forward corner of hold 5 and subsequent vehicles aft from there to hold 8F. At that point, cease roll-on operations until the hatch cover to hold 8A has been replaced. Then stow the next vehicle at the point where roll-on operations ceased. However, leave a clear path about two vehicles wide along the starboard side of the hatches. Keep this path clear until the hatch on hold 8A is loaded with vehicles, then fill the path, working from the aft side forward.

(d) In both of the above cases, use cranes to lift on vehicles to fill spaces where vehicles cannot be driven. These methods use more lifts than would be necessary if vehicles were not driven on until all lift-on operations into the aft holds were completed. However, they result in significant overall timesavings.

Downloaded from http://www.everyspec.com

(e) If these methods cannot be implemented and drive-on operations cannot be started until all the aft holds have been loaded, the first vehicles driven on should be stowed in the port aft corner of the deck. Stow subsequent vehicles outward from that point.

e. **"C" Deck.** The recommended order of loading is discussed below. Figure 8-33 shows the indicated routes.

(1) ***Route 1.*** The vehicle leaving the ramp at "C" deck travels through the watertight door on the port side at frame 198. The vehicle follows a circular course around the deck. The vehicle then travels through the watertight door at frame 198 on the starboard side. This permits the loading of vehicles in the cargo area between frames 142 and 198 (the aft third of the deck). Stow the first vehicle on the down portion of the ramp.

(2) ***Route 2.*** At the same time, alternate vehicles leaving the ramp travel through the watertight door at frames 198 and 242 on the port side. These vehicles then travel to the cargo area between frames 242 and 290 (the forward third of the deck). Place the first vehicle at the aft starboard position in the cargo area and load the starboard side first. Then close and secure the port watertight door at frame 242. This sequence permits two lashing crews to work simultaneously, one forward and the other aft.

(3) ***Route 3.*** Once the forward and aft sections of the deck have been loaded and secured, the middle section is loaded. Vehicles leaving the ramp travel through the watertight door on the port side at frame 198. These vehicles then follow a circular path around the centerline box columns to the starboard aft side of the cargo area. Stow the first vehicle at the starboard aft side of the area, and subsequent vehicles outward from there.

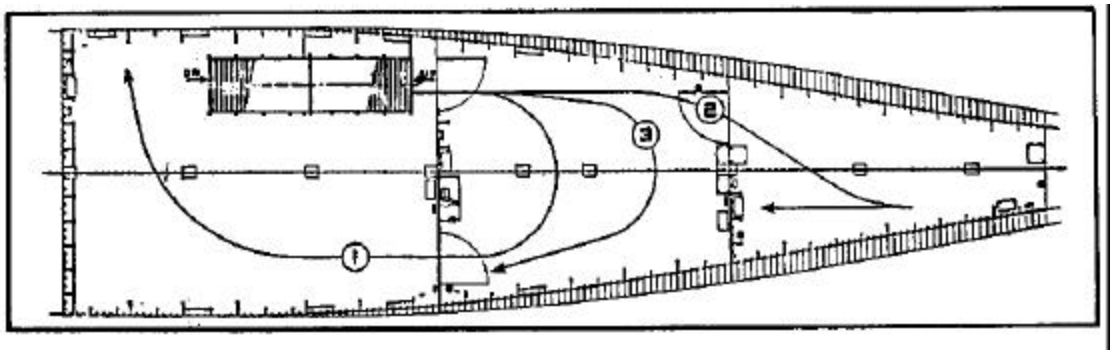

Figure 8-33. RO/RO Flow – "C" Deck

f. **"B" Deck.** The recommended order of loading is discussed below. Figure 8-34 shows the indicated routes.

(1) ***Route 1.*** Vehicles entering "B" deck through the side port doors may enter on either the port side or starboard side. These vehicles then proceed through the watertight doors at frame 198 to the aft third of the deck. Stow the first vehicle on the downward portion of the ramp and subsequent vehicles outward from there. Once the aft third of the deck has been loaded, close and secure the watertight door at frame 198 on the starboard side.

Downloaded from http://www.everyspec.com

(2) ***Route 2.*** As alternate vehicles enter the side port, other vehicles proceed through the watertight doors at frame 242 on the port side and starboard side to the forward third of the deck. Stow the first vehicle in the second deck area of hold 1. Then stow the remainder of "B" deck between frames 290 and 242. Close and secure the watertight doors at frame 242 on the port side and starboard side.

(3) ***Route 3.*** Once the forward and aft sections of the deck have been loaded and secured, the middle section is loaded. Vehicles enter through the side port doors on the port side and starboard side. Stow the first vehicle in the aft starboard corner of the area and subsequent vehicles outward from there. Then close and secure the watertight door at frame 198 on the port side, and remove and stow the portable platform. Also close and secure the side port door and hinged platform.

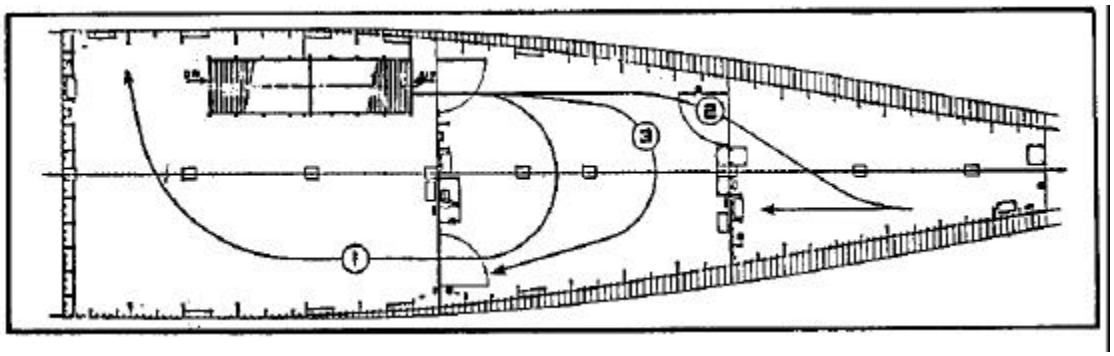

Figure 8-34. RO/RO Flow – "B" Deck

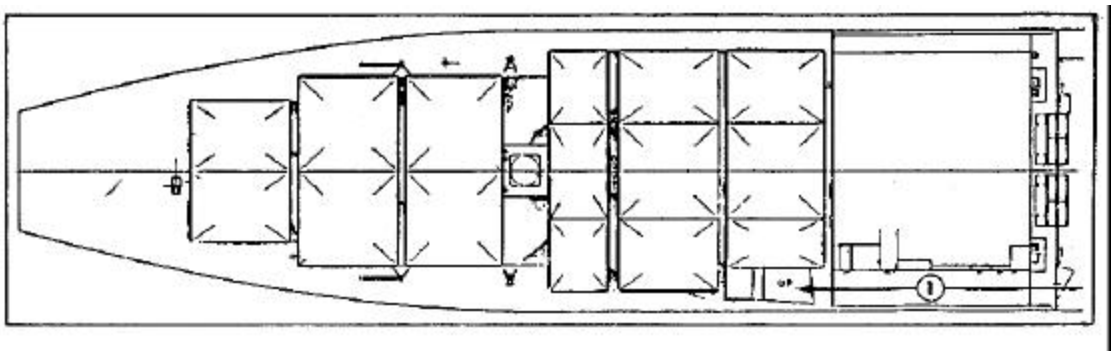

Figure 8-35. RO/RO Flow – Main Deck Aft

8-28. TRAFFIC CONTROL. For maximum load efficiency, roll-on operations must occur concurrently on several decks. Develop a coordinated traffic control plan before beginning operations and execute it forcefully throughout the operation. For a safe and efficient operation, establish the following traffic control points:

- Call forward areas-to direct drivers to the ship and ensure the continuous flow of the required vehicles (according to the stow plan) to the ship.

Downloaded from http://www.everyspec.com

- Bottom of PVR—to tell drivers to report to a specific deck and to ensure a continuous flow of vehicles onto the ship. This person also ensures that the top of the PVR is clear before allowing another vehicle to start up the ramp. Keep vehicles on the PVR in motion at all times, in order to avoid excessive loading.
- Top of PVR to direct drivers to the proper ramp and to ensure that pedestrians do not walk through a vehicle's intended path.
- Exit point of each internal ramp—to direct drivers to the staging line or to another ramp, as appropriate, and to look out for pedestrians.
- Stowage area guides—to guide vehicles into final stow position.

NOTE: Select experienced personnel to man traffic control points. These personnel must ensure the expeditious movement of vehicular traffic in the loading and off-loading process.

8-29. STOWAGE OF VEHICLES WITHIN FIRE LANES. Fire lanes have been designated for the ship's fire and damage control parties. These parties must be able to access any area of the ship during an emergency. They must extinguish fires or repair damages to prevent the loss of life, cargo, and vessel. Vehicles may not block these fire lanes; however, they can be placed alongside them. Lashings may extend across them as long as they are below knee level.

8-30. RAMP PROBLEMS DUE TO TIDES. In areas where wide tidal fluctuations are known to occur, load planners must determine if the tides will cause the PVR to be unusable for any period. The planner should consult the local tide tables along with the approximate apron height above MLW (refer to MTMC report SE 88-3d-29) to obtain the estimated pier height above waterline during high and low tides. After determining that use of the ramp will be lost, take steps to minimize the adverse effect upon the overall operation. Consider prestaging as many vehicles as possible aboard ship during the time directly before the ramp is lost. After ramp is lost, move the vehicles to their final stow location.

NOTE: Each class of design of RO/RO ship has its own flow plan. These should be obtained prior to loading. Once a flow plan has been accepted, it must be adhered to.

Section IV. Discharge Phase of RO/RO Operations

8-31. ROLL-OFF OPERATIONS. Using the proper sequence to drive vehicles off a vessel can significantly reduce overall discharge time by allowing the time-consuming process of removing vehicles from the sea sheds and flatracks to begin sooner. The roll-off sequence must also take into account the effect on the vessel's stability caused by the rapid discharge of vehicles, each weighing up to 60 tons. Also, an effective roll-off discharge plan allows vehicles to clear the port faster and reduces the labor cost of discharging the ship.

a. **Sequence of Discharge.** The order of unloading vehicles is discussed below.

(1) Direct initial efforts at clearing the critical path from the side port door to the port side watertight door at frame 198 in hold 3 on "B" deck, up the internal ramp to "A" deck, across the starboard watertight door, through the vehicular passageway, and out on the MDA. Then, drive all vehicles capable of transiting passageway down this path.

Downloaded from http://www.everyspec.com

(2) These efforts will be aided greatly if unlashing gangs are boarded before the PVR is emplaced, and they begin to unlash vehicles stowed within the critical path.

(3). The next step, which can be conducted concurrently if it does not interfere with the first step, is to clear hold 3 on "B" deck. Clearing this hold allows the starboard aft watertight door to open, which in turn allows access to the lower decks. It also allows more maneuvering room so vehicles can easily transit down the internal ramp from "A" deck and exit out the side port door.

(4) Although greater flexibility exists with the remaining sequence, usually one gang each continues to drive vehicles off the upper and lower levels until the ship's RO/RO section is completely discharged.

b. **Exception.** The three FSSes converted by the Avondale Shipyard have a hydraulic ramp connecting "A" and "B" decks. This ramp must be in the raised position while the ship is enroute and remain so until the vehicles stowed there have been driven off. Therefore, the first priority for the unlashing crews is to remove the VLAs from vehicles located aft of the vehicle passageway on the MDA, within the passageway, and round the hydraulic ramp. These vehicles have to be driven to the MDA where they are lifted off to clear space inside hold 4 on "A" deck so the vehicles stowed on the hydraulic ramp can be moved off and the ramp can be lowered. The critical path should be cleared concurrently with this operation. Once the ramp is lowered, the vehicles stowed on the MDA can be driven down the critical path and off the ship. Then the aft hatch covers can be opened and the lift-off operation can begin.

NOTE: This operation diverts the cranes clearing the MDA to lifting off vehicles that otherwise could be rolled off. This, in turn, delays the entire discharge of the ship. If the stow planner does not require every available foot of stowage space, the area on the hydraulic ramp should be left open.

c. **Stowage of Vehicle Lashing Assemblies.** Ensure that VLAs are placed on holding racks as soon as they are disconnected from vehicles to prevent vehicles from driving over VLAs and damaging them. The VLAs on the deck also present a serious tripping hazard.

8-32. LIFT-OFF OPERATIONS. The remainder of this section is divided into three main topics: aft, mid-, and forward sections of the ship. For an efficient discharge of vessel, these operations must be conducted simultaneously. Each topic is discussed in order of importance.

a. **Aft Section.** The discharge plan focuses on the rapid lift-off of cargo from the sea sheds and flatracks on the aft end. The aft end comprises less than 15 percent of the total square footage available for stowage, but takes almost twice as long to discharge as the rest of the ship. Experience shows that discharge of the aft end determines how long the ship must remain in port. Therefore, lift-off operations on the lift end must begin as soon as the ship arrives at its berth—before the PVR is emplaced. For further clarity, the aft end is treated as two separate sections—the forward side, consisting of holds 5, 6, and 7F; and the aft side, consisting of holds 7A, 8F, and 8A (Figure 8-18). Also, a sequence for discharging the holds and a strategy for each particular hold are recommended.

(1) ***Discharge sequence.*** The fist step in preparing to discharge the aft end is to determine which side will take the longest to off-load. Knowing this, the discharge planner can

Downloaded from http://www.everyspec.com

better decide where to place emphasis. A method for determining the long side is discussed in paragraph 8-23a. Once the long side has been identified, every effort should be made to start lifting cargo from the flatracks and sea sheds on that side as soon as possible. Table 8-2 lists the recommended discharge sequence for each side.

Table 8-2. Recommended hold discharge sequence

HOLD	FORWARD CRANE SEQUENCE
5	1
6	3
7F	2
HOLD	AFT CRANE SEQUENCE
7A	3
8F	2
8A	1

(a) *Recommended sequence for the forward side.* For illustration purposes, the forward side of the aft end is assumed to be the long side. In this case, vehicles should be cleared off the hatch covers of hold 5 as soon as possible so they can be removed and cargo in the flatracks and sea sheds can be lifted out. Hold 5 was chosen because vehicles can be lifted out of it without interfering with the concurrent roll-off of vehicles from the MDA (Figure 8-36). Instructions for discharging the forward side follow:

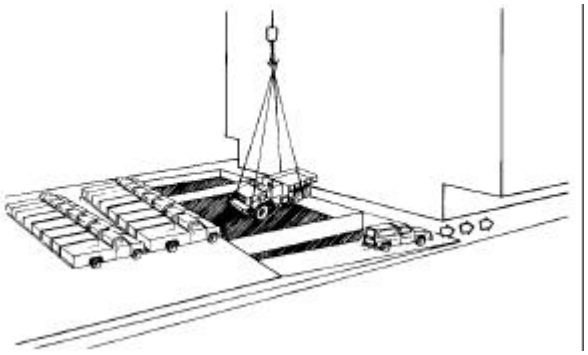

Figure 8-36. Simultaneous lift-off operations for hold 5 and roll-off operations for MDA

- To clear the top of hatch 5, use the crane to lift off vehicles that are too large to transit through the vehicular passageway. Once these vehicles have been removed, the remaining vehicles on top of hold 5 should be lifted off. (It is assumed that the vehicular passageway has not been cleared at this point.) If pier space is available, the hatch covers should be lifted onto the pier. If pier space is not available, the crane would be used to clear enough space on top of hold 6 to stow hatch covers.

- The ships converted by the Avondale Shipyard require a different approach since the internal ramp leading from "A" deck to "B" deck is hinged instead of fixed. The ship will arrive in port with its ramp in the raised position. Cargo stowed on the ramp must be removed before the ramp can be lowered, thereby providing access to the side port door. The

Downloaded from http://www.everyspec.com

forward crane on the aft end must be used to remove vehicles from the vehicular passageway until enough space has been cleared in "A" deck to move the cargo off the hinged ramp. Once this has been done, the crane can be used to clear hold 5.

- As soon as the vehicular passageway is cleared, drive all remaining vehicles that can be driven through the passageway off the MDA. If the ship is being discharged over the starboard side, use extreme caution to prevent vehicles from being driven beneath suspended cargo.
- Drive or tow the remaining vehicles that cannot fit through the vehicular passageway or that are disabled to the "short side" (which in this example is the aft side) where they can be lifted off by the aft crane. These vehicles can be lifted off while the crane is awaiting the opening of the sea shed floors in hold 8A. This procedure enables the crane on the long side to concentrate on discharging cargo from the flatracks and sea sheds. After hold 5 has been discharged, it is recommended that holds 7F and 6 be discharged.

(b) *Recommended sequence for the aft side.* While the above procedure is taking place on the forward side of the aft end, the aft crane should be clearing vehicles from hold 8A using the same set of priorities (vehicles unable to fit through the vehicular passageway first, then all others). Clear space on hold 8F for the hatch covers. Hold 8A was chosen as the first hold on the aft side because it can be opened and discharged without interfering with the roll-off of vehicles on the MDA. The recommended sequence for the remainder of the aft side is hold 8F and hold 7A. If the aft side is the longest, use the same discharge sequence but direct initial efforts at removing vehicles from the top of hold 8A.

(2) ***Hold discharge strategy.*** The general guidance discussed the loading phase still applies to discharge operations on the aft end. Before deciding how to discharge holds 6, 7A, and 8F, determine how the hold was originally loaded. The discharge planner can reverse the methods and realize the same advantages and disadvantages.

(a) *Hold 5.* Discharge cargo from the sea sheds first. This allows time for the sea shed floors to be opened while the crane is discharging cargo from the top tier of flatracks. Then, the empty flatracks can be removed and cargo can be lifted out of the lower tier of flatracks. By the time the empty flatracks have been reloaded into their cells, the sea shed floors will have been opened. This process fully uses the crane and eliminates dead time when the crane might be waiting for the sea shed floors to be opened.

(b) *Hold 6.* Three methods developed for discharging hold 6 are as follows:

- Hatch square method. Remove hatch covers and place them on top of hold 5. Discharge cargo from the top tier of flatracks. Next, remove the two center flatracks from the center section and place them on top of hold 7F. Then, discharge cargo from the two center flatracks on the second tier and jockey vehicles back and forth until they are out of the wings and into the hatch square. When all the cargo has been discharged from the second tier, remove the two empty flatracks in the center of the hold. Discharge the third tier in the same manner as the second tier, then replace flatracks and hatch covers.

NOTE: This method can only be used when the ideal cargo mix has been stowed in this hold.

Downloaded from http://www.everyspec.com

- Alternating cells method. Refer to Figure 8-37, page 8-56. This figure shows the procedures for implementing this method.
- Conventional method. Remove all three hatch covers and place them on hold 5 in the same manner as specified in the step 6 in Figure 8-37. Discharge cargo from the top tier of flatracks and place as many empty flatracks as possible on top of hold 5. Place the remaining empty flatracks on the pier. Discharge cargo from the middle tier of flatracks and place as many of the empty flatracks as possible on top of hold 7F. Place the remaining empty flatracks on the pier. Discharge cargo from the bottom tier of flatracks and replace both tiers of empty flatracks.

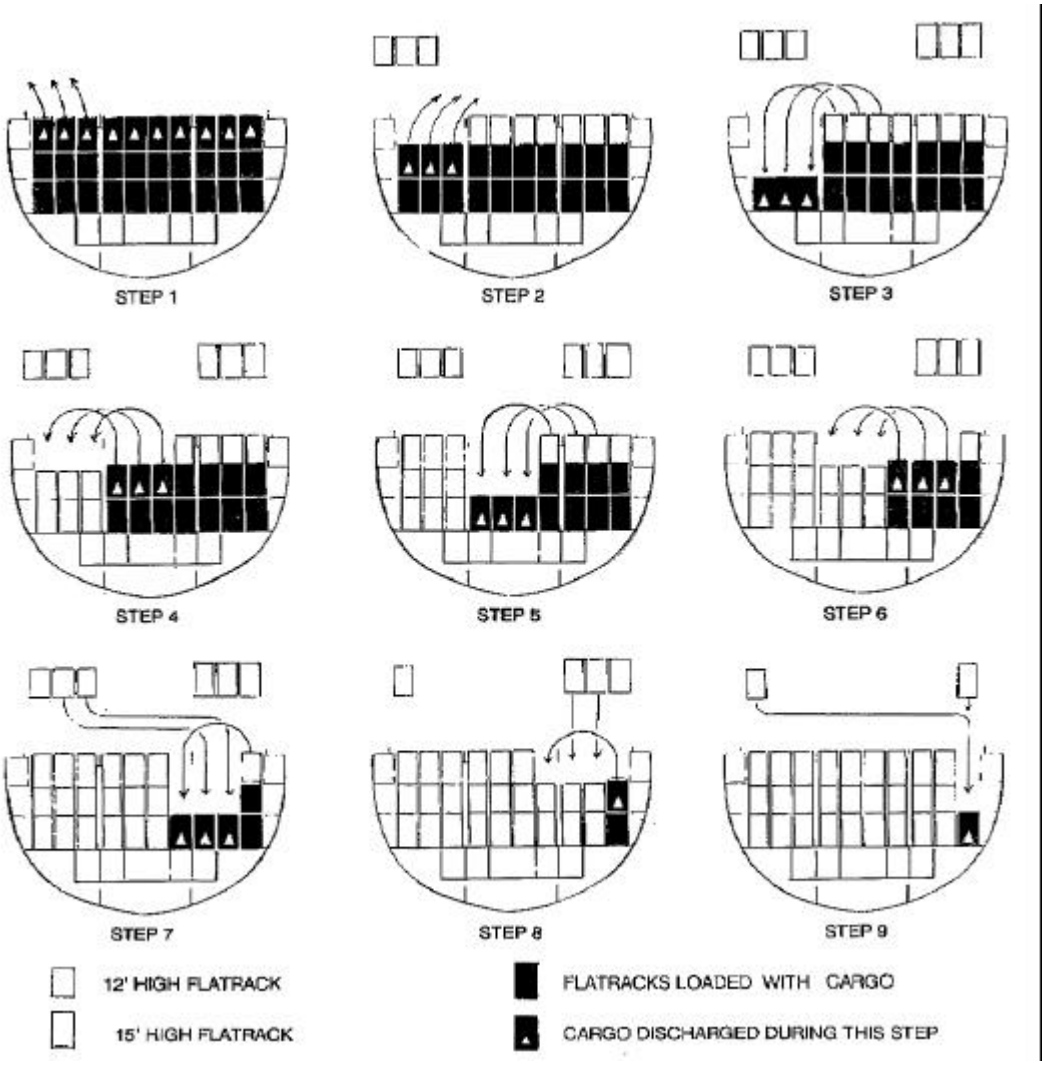

Figure 8-37. Hold 6 – alternating cells discharge method

STEP 1. Remove all three hatch covers and place them on top of hold 5 (two on top of the port hatch and one on top of the center hatch). Discharge cargo from the top tier of flatracks. Then lift out the three flatracks from the top tier of the port section and place them on top of hold 7F.

Downloaded from http://www.everyspec.com

STEP 2. Discharge cargo from the second tier of flatracks. Lift out the three empty flatracks and place them on top of hold 7F.

STEP 3. Discharge cargo from the bottom tier of flatracks. Lift out the three empty flatracks from the center sections and place them into the port section.

STEP 4. Discharge cargo from the flatracks on the second tier of the center section, and transfer the empty flatracks to the top tier of the port section.

STEP 5. Discharge cargo from the flatracks on the bottom tier of the center section. Transfer the three empty flatracks from the top tier of the center and starboard sections to the center section.

STEP 6. Discharge cargo from the exposed flatracks. Then, shift the empty flatracks to the top tier of the center section.

STEP 7. Discharge cargo from the exposed flatracks on the bottom tier. Shift the remaining flatrack on the top tier of the starboard section and two of the 12-foot high flatracks on the top of hold 7F to the middle tier of the starboard section.

STEP 8. Discharge cargo from the flatrack closest to starboard on the second tier. Shift that empty flatrack along with two of the 15-foot high flatracks on the top of hold 7F to the top tier of the starboard section.

STEP 9. Discharge cargo from the exposed flatrack on the bottom tier. Shift the remaining 12-foot high flatrack to the second tier and place the remaining 15-foot high flatrack in the top tier. Replace hatch covers.

(c) *Hold 7F.* This hold can contain 20-foot commercial flatracks or 20-foot containers. No special strategy exists for its discharge, other than to remove all of the hatch covers before starting to discharge cargo.

(d) *Holds 7A and 8F.* These holds are laid out similarly, and the same methods discussed for hold 6 can be used for both.

(e) *Hold 8A.* Remove both hatches and discharge cargo in the top tier of sea sheds. It is important to have the ship's crew standing by so that the sea shed floors can be opened promptly.

b. **Midsection.** Lift-off operations for this section of the ship are discussed below.

(1) Lift-off operations from the midsection of the ship include discharge of cargo from the weather deck and from holds 2 and 3. This discussion identifies the recommended strategy for use of the midship cranes. For illustration purposes, helicopters are assumed to be stowed on "A" deck in hold 2, and containers on the weather deck, aft of the cranes.

(2) The first priority of the forward crane, after the ship has docked, is emplacing the PVR. This operation takes between 15 and 45 minutes (depending on the experience of the crew). The next priority for the forward crane is removing cargo from the port side hatch cover, then removing the hatch, and discharging the helicopters from hold 2.

Downloaded from http://www.everyspec.com

(3) The first priority of the aft crane should be removing vehicles from the hydraulic ramp so that the ramp may be lowered and the remaining vehicles on the weather deck driven off. With early lowering of the hydraulic ramp, fewer vehicles will have to be lifted off, which reduces cargo handling costs. Also, rapid removal of all the vehicles on the weather deck prevents the ship from becoming top heavy, improves stability, and lessens the likelihood of list. This is of particular concern in a LOTS discharge. After clearing the hydraulic ramp, use the aft crane to lift off the containers and other cargo that cannot be driven off.

c. **Forward Section.** Lift-off operations for this section of the ship are discussed below.

(1) Lift-off operations from the forward section are limited to cargo placed on the 37-foot flat and on the hatch cover at the main deck level. Cargo on the second deck can be driven off. Lift-off from this section can begin at almost any point during the vessel discharge since cargo stowed here does not interfere with the discharge of cargo in other sections.

(2) Two methods are used to discharge cargo from the 37-foot flat. The first method uses a nonorganic crane (shore-based or barge-mounted) to lift cargo through the hatch. The second method involves using the forklift stowed in the 37-foot flat to transfer cargo to the second deck. At the second deck, another forklift either drives the cargo off the ship or transfers it to waiting vehicles (stake and platform trailers (yard tractors) are well suited for this purpose). Cargo stowed on the hatch covers on the main deck must be lifted out by cranes.

Section V. Cargo Operations for T-AKR 295 and 296 Class Ships

8-33. CARGO OPERATIONS (T-AKR 295 AND 296 CLASS SHIPS). T-AKR 295 and 296 Class vessels have been designed to accomplish the on-load and off-load evolutions in a combined time of 96 hours or less. The vessels have been designed for last on, first off operations. The on-load activities provide the greatest amount of detail regarding cargo flow. Hence, redundant cargo flowpath information has not been repeated in the off-load section.

8-34. RO/RO OPERATIONS (T-AKR 295 CLASS). The RO/RO cargo stowage may be grouped into four major areas. These are as follows:

- Upper forward—01, 01-A and A Decks (forward of the deck house spaces).
- Lower forward—B, C, D and E Decks (forward of the machinery spaces).
- Upper aft—02, 01, A Deck and AB Flat (aft of the deck house spaces).
- Lower aft—B and C Decks (aft of the machinery spaces).

a. The T-AKR 295 Class vessels perform RO/RO operations in one of three modes. These three modes are as follows:

- Dual ramp operations (loading from both the stern ramp and side port ramps)
- Stern ramp operations (loading only from the stern ramp).
- Side port ramp operations (loading only from the side port ramp).

Downloaded from http://www.everyspec.com

b. Vehicles can traverse to any stowage location from either external ramp. On-load flowpaths for the single ramp operations are essentially a direct path to one of the four RO/RO stowage areas, then are the same as for dual ramp operations once within one of these areas (Figure 8-38).

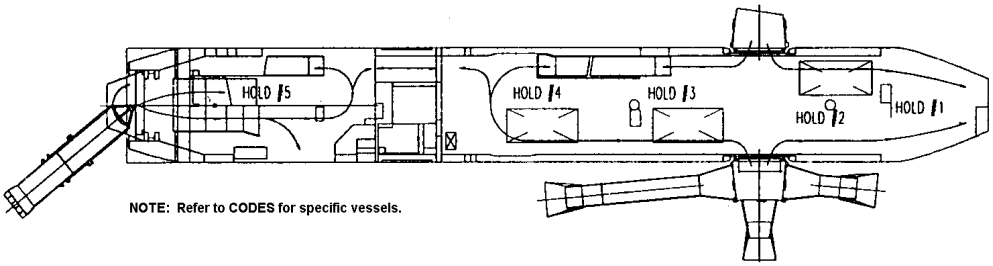

Figure 8-38. T-AKR 295 Class flow diagram

8-35. DUAL RAMP OPERATIONS (T-AKR 295 CLASS). For dual ramp operations, two non-conflicting flowpaths originate from the stern and side port ramps, which allow for simultaneous loading of all cargo stowage areas. Normally the upper forward section is loaded from the side port ramp with the other sections loaded from the stern ramp.

a. **Upper Forward Area.** RO/RO cargo maneuver to the upper forward cargo holds via the following flowpaths:

(1) ***A Deck Cargo Flow (Upper Forward).*** The side port ramp can be deployed from either the port or starboard side of the vessel. From either side port platform, cargo enters A Deck and moves in any one of the following directions:

- Forward on A Deck, to the bottom of the forward hoistable ramp from A Deck to 01-A Deck.
- Aft on A Deck, to the bottom of the aft hoistable ramp from A Deck to 01-A Deck (if loading 01-A Deck with both ramps).
- Aft on A Deck to the port side ramp to 01 Deck.
- Forward or aft to final stow spot on A Deck (after the 01 and 01-A Decks are loaded).

Cargo for final stowage on the A Deck drive through normally flows from the stern ramp, but can be loaded from the side port ramp at this time. The portion of A Deck, just inside the side port platform, is the last to be loaded and requires cargo to back up the side port ramp.

(2) ***01-A Deck Cargo Flow (Upper Forward).*** The cargo flowpaths are designed so that the hoistable 01-A Deck is accessed through one or both of the hoistable ramps. The preferred method of loading 01-A Deck is to load via the forward hoistable ramp, while maintaining the aft hoistable ramp in the stowed position. This procedure allows for the rapid on-loading of the hoistable deck through single direction cargo flow, and minimizes final

Downloaded from http://www.everyspec.com

park/maneuver requirements on each panel. Single ramp loading from the forward hoistable ramp also minimizes the maneuvering and facilitates single direction cargo flow for off-load. Final stow of cargo on the hoistable ramps should be avoided to expedite setup for off-load.

(3) ***01 Deck Cargo Flow (Upper Forward).*** Cargo traverses the ramp from A Deck to 01 Deck and accesses the weather deck stowage area. From the top of the ramp, cargo turns port in a semicircular path to the starboard side of the ship and moves in any one of the following directions:

- Proceeds forward to the starboard side final stow spots.
- Turns 45 degree port, proceeds forward to the port side under the after-crane's booms (between the crane pedestal and the boom rest), then proceeds forward for final stow on the forward port section of the 01 Deck.
- Proceeds to the port for final stow on the port side of the 01 Deck.

b. **Lower Forward Area.** RO/RO cargo enters the ship via the stern ramp at the WTD on AB Flat and proceeds down the ramp (port) from AB Flat to B Deck (aft RO/RO area). At the bottom of the ramp, it then proceeds forward and port to the B Deck drive through. The cargo proceeds through the drive through and enters B Deck (forward RO/RO area) at the top of the ramp from B Deck to C Deck. From there, cargo proceeds to final stow spots on B Deck or forward and down the ramp to the lower decks.

(1) ***B Deck Cargo Flow (Lower Forward).*** From the B Deck drive through, cargo proceeds in either of the following directions:

- Forward and down the ramp from B Deck to C Deck.
- Starboard to clear the ramp then forward to final stow spots on the port and starboard sides in B Deck Holds 1–4.

(2) ***C Deck Cargo Flow (Lower Forward).*** From the bottom of the ramp from B Deck to C Deck in Hold 4, cargo proceeds forward into Hold 3 on C Deck. From there cargo moves in any one of the following directions:

- Continue into Hold 2, then proceed in a semicircular path to the starboard side, then aft through Hold 3 to enter Hold 4. From there it will maneuver for final spot in Hold 4, or move to the port side and proceed down the ramp from C Deck to D Deck (proceeding into Hold 2 before turning aft is the preferred route when continuing for stowage in D and E Decks).
- Proceed forward for final stow in Holds 1 and 2.
- Maneuver for final stow in Hold 3.

(3) ***D Deck Cargo Flow (Lower Forward).*** From the bottom of the ramp from C Deck to D Deck, cargo proceeds forward into D Deck Hold 3. From there cargo moves in any one of the following directions:

- Moves forward on the port side to enter Hold 2 for final stow.
- Proceeds in a semicircular path to the starboard side then aft to enter Hold 4. It then maneuvers for final spot in Hold 4, or continues to the port side of the ship and proceeds down the ramp from D Deck to E Deck.

Downloaded from http://www.everyspec.com

- Maneuvers for final stow in Hold 3.

(4) ***E Deck Cargo Flow (Lower Forward).*** Once at the bottom of the ramp from D Deck to E Deck, cargo proceeds forward into Hold 3 on E Deck. From there cargo moves in any one of the following directions:

- Moves forward on the port side into Hold 2 for final stow.
- Proceeds in a semicircular path to the starboard side, then aft to enter Hold 4 for final stow.
- Maneuvers for final stow in Hold 3.

c. **Upper Aft Area.** RO/RO cargo enters the ship via the stern ramp at the WTD on AB Flat and proceeds up the ramp (starboard) from AB Flat to A Deck. Cargo then proceeds to the upper aft decks or maneuvers for final stow in A Deck, Hold 5.

(1) ***A Deck Cargo Flow (Upper Aft).*** From the top of the ramp from AB Flat to A Deck aft, the cargo moves in either of the following directions:

- Proceeds in a semicircular path to the port side then proceeds aft and up the ramp from A Deck to 01 Deck.
- Maneuvers for final stow on A Deck and the A Deck drive through.

Cargo for final stowage on the A Deck drive through normally flows from the stern ramp, but can be loaded from the side port ramp with the forward A Deck cargo. The last cargo to be loaded into Hold 5 is to back up the stern ramp (AB Flat area) for final stow.

(2) ***01 Deck Cargo Flow (Upper Aft).*** From the top of the ramp from A Deck to 01 Deck, cargo moves in either of the following directions:

- Proceeds in a port semicircular path to the forward area of Hold 5 then back to the starboard in a semicircular path to the bottom of the ramp from 01 Deck to 02 Deck. Cargo then proceeds aft and up the ramp to 02 Deck.
- Maneuvers for final stow in Hold 5, 01 Deck.

(3) ***02 Deck Cargo Flow (Upper Aft).*** From the top of the ramp from 01 Deck to 02 Deck, cargo maneuvers for final stow in Hold 5, 02 Deck.

d. **Lower Aft Area.** From the stern ramp, RO/RO cargo proceeds to the lower aft area by proceeding down the ramp (port) from the AB Flat to B Deck.

(1) ***B Deck Cargo Flow (Lower Aft).*** From B Deck, cargo moves forward through the B Deck drive through for stowage in the lower forward RO/RO area, or proceeds for final stow in the lower aft area. For final stow in the lower aft area, cargo moves in either of the following directions:

- Proceeds in a semicircular path starboard to the top of the ramp from B Deck to C Deck, then down to C Deck.
- Maneuvers for final stow in Hold 5, C Deck.

Downloaded from http://www.everyspec.com

(2) ***C Deck Cargo Flow (Lower Aft).*** From the bottom of the ramp to C Deck, cargo maneuvers for final stow in Hold 5, C Deck.

8-36. SINGLE RAMP OPERATIONS (T-AKR 295 CLASS). The flowpaths for dual ramp operations provide the standard approach to the typical on-load scenario. They do not, however, fully illustrate the flexibility of the T-AKR 295 Class design with respect to selective use of the external ramps and assignment of cargo holds for stowage to those ramps. Either external ramp can load the ship individually. For single ramp operations, flowpaths and cargo loading order are modified from the dual ramp scenario. Once the cargo reaches one of the four RO/RO stowage areas, the single ramp flowpaths intersect the flowpaths for dual ramp operations, and from that point the cargo routes to the different decks and holds are essentially the same. As with dual ramp operations, care must be taken to monitor the progress of loading the upper sections to preclude adversely affecting the ship's trim, stress, and stability.

8-37. SINGLE RAMP OPERATIONS FROM THE STERN RAMP. During single ramp operations from the stern ramp—the upper aft, lower aft and lower forward RO/RO areas load using the same flowpaths as those used for dual ramp operations. The flowpaths for the upper forward area are similar to those for dual ramp operations, except they originate from the A Deck drive through instead of the side port ramp.

a. **Upper Aft, Lower Aft, and Lower Forward Areas.** During single ramp operations from the stern ramp—the upper aft, lower aft and lower forward RO/RO areas load using the same flowpaths as those used for dual ramp operations.

b. **Upper Forward Area.** Cargo to be stowed in the upper forward area, loads from the stern ramp then proceeds up the ramp from AB Flat to A Deck. It then moves to the port side and through the A Deck drive through to emerge in Hold 4, A Deck. From there, the cargo moves in either of the following directions:

- Proceeds forward to access either the forward or aft hoistable ramp to 01-A Deck. One or both of the hoistable ramps may be used to load the 01-A Deck. From the A Deck drive through, to access either ramp you should move in the directions indicated for each below:

  - Forward hoistable ramp—cargo moves forward and to the starboard to clear the ramp from A Deck to B Deck. It then moves forward and to the starboard side of the ship, then to the bottom of the forward ramp.
  - Aft hoistable ramp—cargo moves forward and to the starboard to clear the ramp from A Deck to B Deck. It then moves forward, and once past the aft hoistable ramp, the cargo maintains sufficient turning room to execute semicircular turn to the starboard side of the ship. It then proceeds aft on the starboard side to the aft hoistable ramp.

- Proceeds to the ramp from A Deck to 01 Deck. From the A Deck drive through, cargo moves forward and starboard to clear the ramp from A Deck to B Deck. It then proceeds forward and toward the starboard side of the ship to achieve enough turning room to make a 180 degree turn back and aft toward the ramp. Once past the ramp to 01 Deck, cargo proceeds in a semicircular path to the port side of the ship and proceeds aft and up the ramp to 01 Deck. Or the cargo, maneuvers for final stow on A Deck.

Downloaded from http://www.everyspec.com

c. Once the cargo reaches the final stow deck, maneuvering to the final stow spot is the same as for dual ramp operations.

8-38. SINGLE RAMP OPERATIONS FROM THE SIDE PORT RAMP. During single ramp operations, the side port ramp uses the same flowpaths for cargo movement to the upper forward RO/RO area as those used during dual ramp operations. The A Deck drive through provides cargo access to the upper aft RO/RO area. Cargo proceeds down to B Deck for access to the lower forward and lower aft RO/RO areas. Once the cargo reaches the final stowage areas, the flowpaths will intersect with the dual ramp flowpaths, and from that point are essentially the same as the dual ramp flowpaths.

a. **Upper Forward Area.** Cargo flowpaths for the upper forward area remain the same for those used for dual ramp operations.

b. **Upper Aft Area.** Cargo flow from the side port ramp (either starboard or port configuration) proceeds aft on A Deck to the A Deck drive through. It proceeds through the drive through into A Deck, Hold 5 and then does one of the following:

- Moves aft and up the ramp from A Deck to 01 Deck. From there, the flowpaths are the same as those for dual ramp operations.
- Moves to the port and proceeds to the ramp from A Deck to AB Flat. It then proceeds for final stow on AB Flat (port area of AB Flat) or maneuvers for final stow on the ramp, or maneuvers for final stow in A Deck, Hold 5.

c. **Lower Forward Area.** Cargo flow from the side port ramp (either starboard or port configuration) proceeds aft on A Deck to the ramp from A Deck to B Deck, Hold 4. It then proceeds down and forward to B Deck. From there it moves in any one of the following directions:

- Proceeds forward into Hold 3, B Deck and continues forward through the port WTD into Hold 2. The cargo then makes a semicircular turn to the starboard side and proceeds aft through the starboard WTDs through Hold 3 and into Hold 4. From there, it proceeds to the port side to the ramp from B Deck to C Deck, and moves down and forward to C Deck. The flowpaths for final stow on C, D and E Decks are then the same as those for dual ramp operations.
- Proceeds forward and/or starboard for final stow on B Deck, Holds 1, 2 or 3. Or, cargo will proceed forward on B Deck to clear the ramp, then turn in a semicircular path to proceed aft on the starboard side to Hold 4 for final stow.
- Proceeds forward into Hold 3, B Deck and continues forward through the port WTD into Hold 2. The cargo then makes a semicircular turn to the starboard side and proceeds aft through the starboard WTDs through Hold 3 and into Hold 4. From there, it proceeds to the B Deck drive through for final stow or to proceed to the Lower Aft RO/RO Area.

d. **Lower Aft Area.** Cargo flow to the lower aft area from the side port ramp (either starboard or port configuration) proceeds aft on A Deck to the ramp from A Deck to B Deck, Hold 4. It then proceeds down and forward to B Deck. On B Deck, it then moves forward through Hold 3 and continues forward through the port WTD into Hold 2. The cargo then makes a semicircular turn to the starboard side and proceeds aft through the starboard WTDs through Hold 3 and into

Downloaded from http://www.everyspec.com

Hold 4. From there, it proceeds to the B Deck drive through and proceeds aft to Hold 5, B Deck. It then proceeds in any one of the following directions:

- Proceeds port and aft to the ramp from B Deck to C Deck, then continues down to C Deck for final stow.
- Proceeds aft to the ramp from B Deck to the AB Flat and moves up the ramp for final stow on the AB Flat (starboard area of AB Flat) or maneuvers for final stow on the ramp.
- Maneuvers for final stow in B Deck, Hold 5.

Due to the restricted maneuvering area on AB Flat, there is no access for cargo between the aft A and B Decks unless the stern ramp is deployed.

8-39. LO/LO OPERATIONS (T-AKR 295 CLASS). As with RO/RO operations, LO/LO operations are generally performed under the supervision of the local Army port activity. Coordination between the ship's crew and the supervisory Army transportation cargo handling personnel is essential before LO/LO operations begin. The ship's crew should be informed ahead of time about local weather conditions for proper crane warm-up and as to whether the cranes will be initially used in single or twin mode. Throughout the entire loading operation, it is important to remember that the ship's master is responsible for the safety of the ship, the crew and the cargo, and has the final word on safe cargo operations.

a. Numerous options for load configuration exist for LO/LO operations just as they do for RO/RO operations. Once again, careful load planning will enhance efficiency. The number of line handlers, taglines, spreaders and the other associated LO/LO equipment will be determined by the size and mix of the cargo. At no time should LO/LO operations interfere with RO/RO operations.

b. The flowpath for non-self-propelled LO/LO cargo is separate from the RO/RO flowpath. When there is a need to lift self-propelled cargo onto the ship, it is treated as LO/LO cargo until it is disconnected from the crane. A driver will maneuver the cargo from the drop point and merge into the RO/RO flowpath to take the cargo to its final stow location.

c. All non-self-propelled LO/LO cargo must be brought to the designated crane's pick up point by a resource. In general, the resources (forklifts, container handlers, helo movers, etc.) used to deliver the LO/LO cargo to the crane's pick up point are owned and operated by either the PSA or the port facility and commercial stevedores. Once aboard the ship, the LO/LO cargo is moved from the drop point to its final stow location by the ship's organic resources operated by military terminal service company personnel or commercial stevedores. In certain instances, LO/LO cargo such as helicopters, will be wheeled by hand to their final stow location by personnel assigned to the unit which owns the cargo. As a rule, aircraft should never be rolled or towed on or off the ship or to another deck of the ship using the external and internal ramps.

d. LO/LO flowpaths for these ships consist of the designated crane pick up points for both the forward and aft cranes; the exposed weather deck on 01 Deck and the hatchways for Holds 2, 3, and 4; the drop off point; and the cargo's final stow location. The forward crane can reach the forward points of the exposed weather deck on 01 Deck and Holds 2 and 3. The aft crane can reach Holds 3 and 4 and the aft portion of the exposed weather deck on 01 Deck.

Downloaded from http://www.everyspec.com

8-40. RO/RO OPERATIONS (T-AKR 296 CLASS). The T-AKR 296 Class ships can perform RO/RO operations in one of three modes:

- Dual ramp operations (stern ramp and side port ramp).
- Stern ramp operations.
- Side port ramp operations.

Figure 8-39 provides a detailed cargo flow diagram of on-load operations.

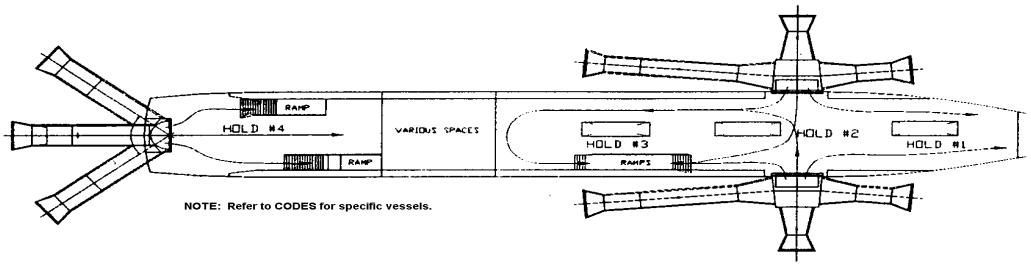

Figure 8-39. T-AKR 296 Class flow diagram

8-41. DUAL RAMP OPERATIONS FROM STERN RAMP. The following sections describe the detailed stern ramp flowpath used in dual ramp operations to load cargo on the 02 Level, on the A Deck, and in Hold 4 of B, C, and D Decks.

a. **B Deck Cargo Flow from the Stern Ramp.** Cargo enters Hold 4 on B Deck through the stern ramp WTD. It can directly access the aft lower decks, via a fixed ramp in the port side of Hold 4 on C Deck. Cargo can also access A Deck, via a fixed ramp to A Deck on the starboard side of Hold 4 on B Deck. This ramp to A Deck also allows cargo from the stern ramp to access the forward holds on B Deck and the 02 level. Furthermore, it allows cargo to enter the fixed ramp system to the forward lower decks (C, D, E, and F Decks) via a fixed ramp down to Hold 2 on B Deck from Hold 3 on A Deck.

b. This “up-over-down” traversal of cargo from aft to forward is generally used in single ramp operations where the loadout is conducted with only the stern ramp. The stern ramp is the ramp of choice for loading the upper decks (A Deck and the 02 Level) and the aft lower decks when both ramps are used. This is due to the absence of cargo flowpath interference when cargo is entering the ship via the side port ramp.

c. **02 Level and A Deck Cargo Flow from the Stern Ramp.** From the top of the aft ramp to Hold 3 on A Deck, cargo can move in either of the following directions:

- Cargo can take a circular course to the port side of the hold between the stairtower and the aft centerline stanchion. From there, it can proceed aft exiting the enclosure via the aft WTD to the aft weather deck stowage area on A-Deck.
- Cargo can proceed forward moving from starboard to port, between the stairtower and the aft centerline stanchion. It can then continue forward on the port side of the enclosure through the forward WTD, exiting onto the forward weather deck stowage area on A Deck.

Downloaded from http://www.everyspec.com

From the forward WTD of the A Deck enclosure, cargo can proceed forward along the port side of A Deck to its specified stow location. From the forward WTD, cargo can also take a circular course on A Deck between the centerline fan room (frame 205) and the aft-crane boom rest to the starboard side of the deck. It then can access the ramp up to the 02 Level cargo stowage area. The 02 Level is located directly above the forward half of the A Deck enclosure. This stowage area contains the Hold 3 hatch cover and also serves as the Helicopter Facility.

d. **C Deck Cargo Flow from the Stern Ramp.** Cargo to be stowed in the after lower decks transits the port side fixed ramp in Hold 4 on B Deck down to Hold 4 on C Deck. From the bottom of the ramp, cargo can either park within the hold or take a circular course aft between the forward bulkhead and the forward centerline stanchion to the ramp down to Hold 4 on D Deck. The top of this ramp is located on the aft port side of the hold. From here, cargo maneuvers to its final stow location within Hold 4 on D Deck. Once the upper decks (02 Level and A Deck) and the lower aft decks (Hold 4 of C and D Decks) are completed (including any stowage of vehicles on the associated ramps), the forward area of Hold 4 on B Deck is loaded. The aft area of Hold 4 on B Deck is then loaded with the last vehicles to be loaded backing up the stern ramp.

8-42. DUAL RAMP OPERATIONS FROM THE SIDE PORT RAMP. The following sections describe the detailed side port ramp flowpath used in dual ramp operations to load cargo in the holds forward of the machinery spaces (Holds 1, 2, and 3) on B through F Decks and AB and BC Decks. As with those operations discussed in the previous section, it is important to note that these operational loading procedures take place at the same time as those discussed in that section.

a. **B Deck Cargo Flow from the Side Port Ramp.** From the side port ramp and platform, cargo enters Hold 2 on B Deck and can proceed in one of the following directions:

- Forward into the forward most portion of the B Deck stowage area.
- Across B Deck to the port side between the two centerline stanchions and either turn forward accessing the forward hoistable ramp to AB Deck or turn aft entering the aft forward section of B Deck to access the after hoistable ramp to AB Deck.
- Proceed aft along the starboard side of B Deck to the forward ramp to A Deck.
- Across B Deck to the port side conducting a circular course along the after bulkhead of B Deck to the top of the forward ramp to C Deck.

(1) If required, access from the forward portion of B Deck to the aft portion of B Deck and the after lower deck is accomplished via the starboard fixed ramp to A Deck. Cargo traversing the forward ramp up to A Deck proceeds aft from the top of that ramp to the top of the aft ramp, which leads down to the aft port side of B Deck, and subsequently to the aft lower holds. This is a reversal of the route described in the previous section. As discussed previously, the stern ramp is assigned to load the upper decks and the aft lower decks including Hold 4 on B Deck. The side port ramp is used to load the forward lower holds, the hoistable decks, and the forward portions of B Deck. This "up-over-down" transit from forward to aft is used only during single ramp operations where cargo is loaded using only the side port ramp.

(2) To access the forward lower holds, cargo traverses from the starboard side port ramp directly across to the port side of B Deck, between the two centerline stanchions, and

Downloaded from http://www.everyspec.com

turns aft into the aft forward portion of B Deck. Proceeding aft towards the after bulkhead of B Deck, cargo takes a circular course to starboard, reaching the top of the forward ramp to C Deck.

b. **C Deck Cargo Flow from the Side Port Ramp.** After traversing down the ramp to C Deck, cargo proceeds forward from the bottom of the ramp into Hold 2 on C Deck. From there, cargo either moves forward into Hold 1 on C Deck, aft to Hold 3 on C Deck and the forward ramp to D Deck, or accesses the forward ramp to BC Deck located on the starboard side of Hold 2 on C Deck.

(1) Moving forward on the starboard side through Hold 2 on C Deck, cargo can pass through either the starboard-side WTD or traverse across the hold between the two centerline stanchions and use the port side WTD to Hold 1 on C Deck.

(2) Cargo proceeding to Hold 3 on C Deck or to D, E, and F Decks traverses through a circular course in Hold 2 on C Deck to the aft port side WTD. From this WTD, cargo can either maneuver to park in Hold 3 on C Deck, access the aft ramp to BC Deck, or conduct another circular course to the starboard side of Hold 3 on C Deck and proceed to the top of the forward ramp to D Deck.

c. **D Deck Cargo Flow from the Side Port Ramp.** The RO/RO movement on D Deck is similar to that of C Deck. After traversing the ramp down to D Deck, cargo proceeds forward from the bottom of the ramp into Hold 2 on D Deck. From there, cargo either moves forward into Hold 1 on D Deck, aft into Hold 3 on D Deck, or accesses the ramp to E Deck located on the starboard side of Hold 3 on D Deck. Driving forward on the starboard side through Hold 2 on D Deck, cargo can pass through either the starboard side WTD or cross between the two centerline stanchions and use the port side WTD to Hold 1 on D Deck. Cargo crossing Hold 2 on D Deck turns to port between the two centerline stanchions. Cargo proceeding to Hold 3 on D Deck or to E and F Decks traverses through a circular course in Hold 2 on D Deck to the port side WTD. From this door, cargo can either maneuver to park in Hold 3 on D Deck or conduct another circular course to the starboard side of Hold 3 on D Deck and proceed to the top of the ramp to E Deck.

d. **E Deck Cargo Flow from the Side Port Ramp.** After descending the ramp to E Deck, cargo proceeds forward from the bottom of the ramp into Hold 2 on E Deck. Once there, cargo maneuvers to park in Hold 2 on E Deck or proceeds aft to Hold 3 on E Deck and the ramp to F Deck located on the starboard side of Hold 3. Cargo proceeding to Hold 3 on E Deck or to F Deck traverses through a circular course in Hold 2 on E Deck through the port WTD. From this door, cargo can either maneuver to park in Hold 3 on E Deck or conduct another circular course to the starboard side and proceed to the top of the ramp to F Deck.

e. **F Deck Cargo Flow from the Side Port Ramp.** After making the final descent to F Deck, cargo proceeds forward from the bottom of the ramp into Hold 2 on F Deck. From there, cargo maneuvers to park in Hold 2 or proceeds aft to Hold 3 on F Deck. Cargo crossing Hold 2 on F Deck turns to port between the aft bulkhead and the centerline stanchion and enters Hold 3 on F Deck through the port WTD. From this door, cargo maneuvers to park in Hold 3.

f. **BC Deck Cargo Flow from the Side Port Ramp.** Once D, E, and F Decks are loaded, cargo can proceed to BC Deck from Holds 2 or 3 on C Deck. Due to the positioning of the BC

Downloaded from http://www.everyspec.com

Deck hoistable ramps, cargo flow to the lower decks and maneuvering on C Deck are both restricted. This results in Hold 3 on BC Deck loading first, followed by Hold 2 on BC Deck.

(1) Cargo enters Hold 3 on BC Deck via the hoistable ramp in Hold 3 on C Deck. Likewise, cargo destined for Hold 2 on BC Deck enters from Hold 2 on C Deck. There is no direct access between the Holds 2 and 3 on BC Deck.

(2) The WTDs on C Deck between Holds 2 and 3 may be open, giving the appearance of passage between Holds 2 and 3 on BC Deck, but there is no such access. At the completion of loading BC Deck, cargo loading may resume on the fixed decks. This begins with C Deck and proceeds up to B Deck.

g. **AB Deck Cargo Flow from the Side Port Ramp.** AB Deck, a hoistable deck, does not contain transverse bulkheads and allows continuous flow of cargo along its entire length. From the side port ramp, cargo traverses across Hold 2 on B Deck and turns forward along the port side. At this point, cargo accesses the forward hoistable ramp to AB Deck or turns aft and accesses the after ramp to AB Deck.

(1) Use of only one ramp for accessing AB Deck allows the loading of the hoistable deck in a continuous “column flow” of vehicles. This method permits a faster on-load and off-load time by eliminating the need for each vehicle to conduct extensive maneuvering in order to park. Each vehicle simply traverses the empty portion of the deck and then parks.

(2) Once AB Deck and the forward hoistable ramp to AB Deck are loaded, B Deck can continue loading. Loading AB Deck, as described above, allows the portions of B Deck on centerline (those that are not in the way of the cargo flowpath) to be loaded prior to or during the loading of AB Deck. To complete the loading of B Deck, the last cargo to load is required to back up the side port ramp into Hold 2 on B Deck.

8-43. SINGLE RAMP OPERATIONS (T-AKR 296 CLASS). The cargo flowpath presented above does not indicate the total flexibility of the ship design with respect to the use of the external ramps and the assignment of specific cargo holds to those ramps. The previous sections described the flow of cargo with both external ramps in use and a specific flowpath assigned to each external ramp. However, both of the external ramps can load the ship individually. The following briefly describes single ramp operations:

a. **Single Ramp Operations from the Stern Ramp.** During single ramp operations from the stern ramp, the stern ramp continues to load the upper decks and aft lower decks via the fixed ramps in Hold 4 on B Deck. However, it adapts its flow of cargo to pass up and over into the forward holds of the ship. The cargo loading order must be modified from the dual ramp operations loading order in order to load the ship efficiently. In addition, care must be taken to avoid loading the upper portions of the ship first, adversely effecting the ship’s trim, stress, and stability.

b. **Single Ramp Operations from the Side Port Ramp.** During single ramp operations from the side port ramp, the side port ramp retains its flow of cargo to the forward lower decks and the hoistable decks but also uses the up-and-over path to access the upper decks (A Deck and the 02 Level) and aft lower decks. The cargo loading order must be modified from the dual ramp operations loading order in order to load the ship efficiently. In addition, care must be taken to

Downloaded from http://www.everyspec.com

avoid loading the upper portions of the ship first, adversely effecting the ship's trim, stress, and stability.

8-44. LO/LO OPERATIONS (T-AKR 296 CLASS). As with RO/RO operations, LO/LO operations are generally performed under the supervision of the local Army port activity. The cargo flowpath for non-self-propelled LO/LO cargo is separate from the RO/RO flowpath. However, certain situations may arise when there is a need to LO/LO self-propelled cargo into the ship. In these situations, the cargo is treated as LO/LO cargo until it is disconnected from the crane. At this point a driver will maneuver the cargo from the drop point and merge into the RO/RO flowpath to take the cargo to its final stow location.

a. All non-self-propelled LO/LO cargo must be brought to the designated crane's pick up point by a resource. In certain instances, LO/LO cargo such as helicopters will be wheeled by hand to their final stow location by the owning unit personnel. As a rule, aircraft should never be rolled or towed on or off the ship or to another deck of the ship using the external and internal ramps.

b. The LO/LO flowpath for these ships consists of the following:

- Designated crane pick up points for both the forward and aft cranes.
- Exposed weather deck on A Deck and on the 02 level.
- Hatchways for Holds 1, 2, and 3.
- The drop off point.
- The cargo's final stow location.

The forward crane can reach the forward points of the exposed weather deck on A Deck and Holds 1 and 2. The aft crane can reach Holds 2 and 3, the aft exposed weather deck on A Deck, and the forward portion of the 02 level stowage area.

Downloaded from http://www.everyspec.com

CHAPTER 9

SECURING, LOADING, AND STOWING HAZARDOUS CARGO

9-1. FUNDAMENTAL SECURING PROCEDURES. Shifting cargo presents hazards such as damage to the vessel or explosions. It is important that all precautions be taken to protect cargo from shock, fire, high temperature, moisture, or any other hazards that could lead to a catastrophe. In transit, repairs to dunnage or resecuring shifted cargo are difficult and dangerous. The term securing describes the procedures by which military explosives are effectively blocked, braced, and tommed aboard merchant-type ships. Securing is done to resist forces generated by vessel response to sea conditions and includes various wooden structures. It also includes any straps or webs that are used to restrain cargo stowed in the holds and on the weather deck of a ship. The terms blocking and bracing describe more specifically the securing process. The terms are closely related, although each function is distinctly different.

a. **Blocking.** Blocking is the act of attaching solid pieces of wood, or blocks, to a deck, bulkhead, or overhead, so that these pieces lean directly against the cargo to prevent its movement. Blocking must be braced, shored, or tommed to be effective. Figure 9-1 shows the basic technique of blocking from which more complex securing structures are developed. Additional bracing would be required to secure the item adequately. Pieces of wood measuring 2 by 4 inches are doubled instead of using single 4- by 4-inch pieces to make nailing and securing to the deck possible. The 2- by 6-inch blocking extends the full width of the unit load. Since blocking may be nailed directly into the wooden deck, the load may be secured in any location in the hold without the need for extending pieces to permanent ship's structures for bracing. Since it is very difficult to drive nails into a metal deck, 4- by 4-inch lumber must be extended to the bulkhead to provide necessary bracing.

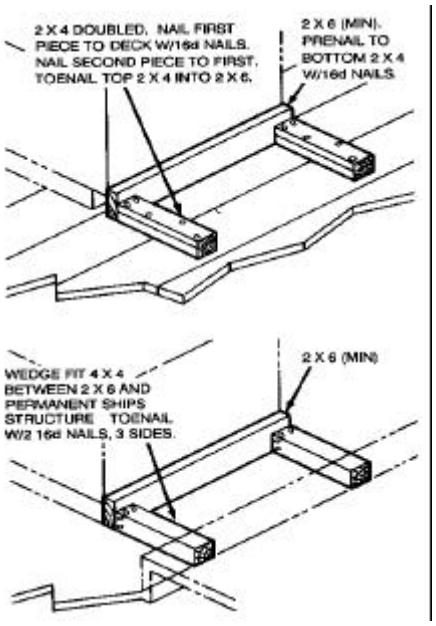

Figure 9-1. Blocking for wood and metal decks

b. **Bracing.** Bracing is the act of installing a wood piece or structure so that it extends from a deck, bulkhead, or overhead to the stow. This technique strengthens the blocking by supporting it in a horizontal direction. Figure 9-2, page 9-2 shows a basic method of bracing. Kickers are relatively short lengths of lumber nailed horizontally. They add rigidity to the uprights and braces and are either nailed to the deck or wedge-fitted to a bulkhead. In both cases, the structure extends slightly higher than the unit load and along its full width.

Downloaded from http://www.everyspec.com

c. **Shoring and Tomming.** Shoring, which includes blocking and bracing, is the process of securing cargo to prevent side-to-side movement by supporting it from the side. Shoring may also be used to prevent downward movement by supporting cargo from below. Tomming is the securing of cargo to prevent upward movement. Personnel secure the cargo by running lumber from the ship's overhead structure down to the cargo either vertically or at an angle.

9-2. PRELOAD SECURING. After inspecting and cleaning the hold as required for loading explosive cargo, personnel begin prestow preparation and loading. Considering the stowage requirements of the type of cargo being loaded, structures such as heat bulkheads or sheathing are installed.

a. Sweatboards (or sweatbattens) are lengths of lumber, usually 2- by 6-inch stock, installed in hangers or bolted over the ship's structural stiffener beams (see Figure 9-3). They are used to prevent damage to the cargo or ship caused by contact of the cargo with the ship's structure and hull. Contact with moisture condensing on the hull plate is also prevented, hence the name "sweatboards." Before placing the cargo, personnel should replace all missing or damaged sweatboards from the ship's stock or use 2- by 6-inch lumber cut to the required length.

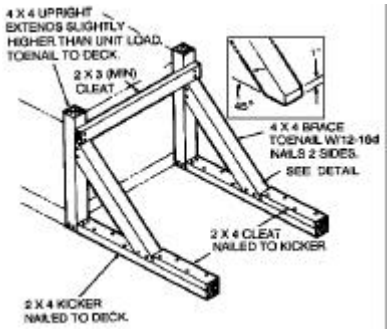

Figure 9-2. Basic bracing for wood deck

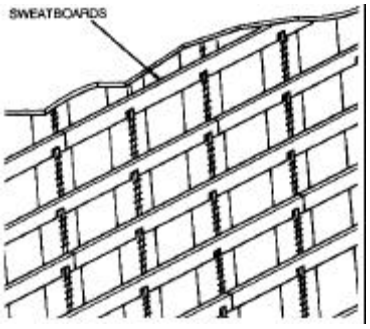

Figure 9 3. Hanger sweatboards

b. Sweatboards bolted in position are more difficult to replace. Personnel must drill holes to receive bolts mounted on the stiffener beams. Sweatboards are not generally used as load-bearing members in the block stow technique. They are used extensively as bearing surfaces for distributed loads transmitted through strip sheathing when the sweatboard-to-sweatboard method is used.

c. After preload securing, crew members must consider the requirements for bulkhead construction. Heat or nonheat bulkheads are constructed wherever loads are stowed along the ship's athwartship structural bulkheads. Heat bulkheads are tightly constructed to prevent radiated heat, such as heat from engine rooms, bulkheads, uptakes, or casing, from reaching the cargo. Figure 9-4 shows typical completed heat and nonheat bulkheads.

Downloaded from http://www.everyspec.com

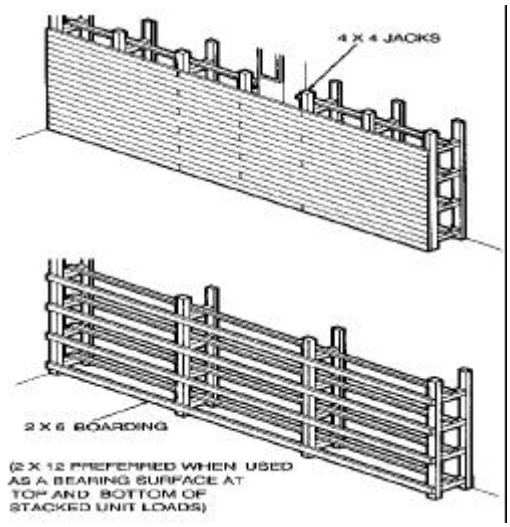

Figure 9-4. Heat and nonheat bulkheads

d. In compartments where hull contour is absent or minimal, extensive preload securing is unnecessary. Responsible personnel only need to protect minor obstructions such as latches, pipes, or conduit. In cases such as these, spacer material is installed before stowage. The spacers are constructed of uprights of a size necessary to obtain adequate clearance. Normally, 4- by 4-inch stock is used for this purpose. Obstructions are boarded over with 3-inch minimum lumber.

e. The final requirement that responsible personnel should consider in basic prestowage securing is the boarding over or encasement of stanchions, ladders, kingposts, vents, pipes, or beams that could otherwise contact the cargo (Figure 9-5). Complete encasement has been almost totally abandoned with the introduction of palletized cargo; however, paragraph 9-2 gives one instance of its use.

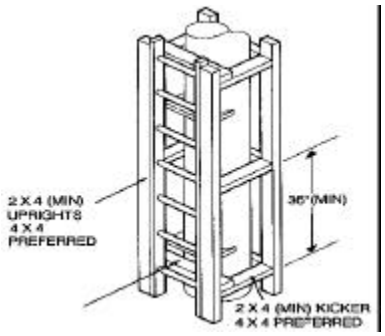

Figure 9-5. Typical partial encasement

9-3. LOADING PROCEDURES. The loading of hazardous cargo is performed in two phases: transfer of the cargo from rail cars or trucks to the dock, and transfer from dock to ship.

a. Rail cars or trucks are subjected to visual inspections en route to the loading area to ensure that the cargo has not been damaged in transit. After the rail car or truck has been opened and its contents inspected, cargo is transferred by forklift truck to designated spotting points for each hatch. When handling loading, or unloading military explosives, cargo handlers should use equipment made especially for this type of cargo.

Downloaded from http://www.everyspec.com

b. Inspectors visually scan explosives positioned for hoisting to detect defects in strapping or packaging. All metal strapping should be tight. The items that make up the unit load should be undamaged. Broken or loose banding of explosives on pallets requires that the defective pallet of explosives be removed, separated from the others, and corrected before loading. Responsible personnel should immediately report defects in banding to the supervising authority for evaluation of the banding and possible on-site rebanding. If damage is evident, workers should transfer the load immediately to an area away from normal loading activity and wait for further instructions.

c. If any of the following conditions exist, cargo handlers should not load the explosive item for transportation or stowage on board any vessel:

- Container failure or evidence of leaking of liquid components.
- Unusual appearance of the container, such as dampness, molds, or stains, indicating internal defects in the absorbent material.
- Defective ammunition and/or packaging.

d. Personnel must remove explosive cargo with any of these problems from the loading area, isolate the cargo, and process it in accordance with safety regulations.

e. At the spotting location, riggers/hook handlers place the appropriate sling on the load and check pallet balance and construction for lift capability.

f. To eliminate excessive drift, responsible personnel should use slings that are as short as possible when handling military ammunition or other explosives. A cargo safety hook is used almost all the time for hoisting loads of military explosives aboard merchant-type ships. Bomb slings (see Figure 9 -6) made of manila or wire rope are used to hoist single bombs aboard the vessel. When the sling is attached to the load and secured to the hook, the signalman signals the winchman to hoist the load. Personnel should be careful not to exceed the weight limits when hoisting drafts. They should lift drafts in a single, smooth motion, clearing the rail and hatch coaming by at least 3 feet. If the activity within the hold restricts the lowering of the load, personnel must return the load to the dock or lower it within 6 inches of the ship's deck until loading begins again.

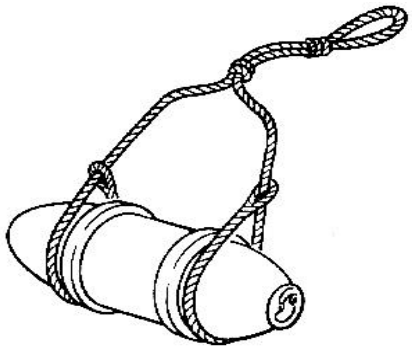

Figure 9-6. Bomb sling

g. Personnel move the load from the square of the hatch to the stowage position by forklift. Wedge-point bar adjustments allow final positioning for a tight stow. Crew members may use pallet trucks or transporters to stow loads in areas of difficult access. Personnel must stow all loads right side up on their pallets or skids.

h. As the loading of each compartment is completed, the ship's master or his authorized representative certifies the stowage using a cargo stowage inspection record.

Downloaded from http://www.everyspec.com

9-4. TYPES OF STOWAGE. This paragraph details the types of stowage specified for military explosives.

a. **Magazine - Class A.** Responsible personnel should isolate magazines when stowing cargo because they are highly sensitive to shock and ignite very easily by sparks or friction. Any class of ammunition requiring magazine stowage, Class A, is not to be overstowed with any other kind of cargo. The type of explosives stowed in magazines must be compatible. Personnel should stow portable magazines in a hold or on deck.

b. **Ammunition.** Military explosives should be stowed in a cool location. The best place is in a lower tween-deck hold or lower hold. Personnel should use the same priorities for selecting locations as those used for magazines.

c. **Chemical.** Chemical agents also require a cool location for stowage; a deep tank or lower hold is preferred. Because of the hazards associated with leakage, cargo handlers should take precautions during the dunnaging operation to seal the pump suctions, hatch covers, and ventilators.

d. **Special.** Responsible crew members should stow classes of military explosives authorized for special stowage in ventilated space protected from the elements. They will ensure that the space does not contain vessel stores, machinery, or navigation equipment. The space should be located so that it can be closed off from traffic while at sea. Personnel should avoid stowing in locations such as deckhouses, mast houses, and mast lockers. Crew members should use dunnage to protect the explosives from contact damage with the ship's structure.

e. **Pyrotechnic.** Cargo handlers should stow pyrotechnic ammunition the same way as they stow ammunition and special stowage. It should be protected from moisture and heat. Except where permitted, personnel should not stow pyrotechnic ammunition in holds or compartments with other military explosives.

f. **Deck.** Most classes of explosive cargo can be stowed on the weather deck. Typical cargo stowed on deck includes the following:

- Last-on, first-off loads which interfere with access to the hatch.
- Items that are too large to fit through the hatches, such as completely assembled missiles or rockets.
- Items that are relatively bulky compared to their weight, such as bomb fins and empty incendiary bombs.
- Flammable liquids, solids, or oxidizing poisons, and combustible liquids (including rocket engines containing a liquid propellant and fuels in containers for guided missiles and rockets).

(1) Cargo handlers should never stow dangerous items such as flammable or combustible liquids on deck above a hold containing ammunition.

(2) The dockside handling procedures for cargo to be stowed on deck and the same as those previously described for cargo stowed in the hold. Often, crew members position the

Downloaded from http://www.everyspec.com

cargo on deck with the hoisting gear and then manually stow it. Proper placement of cargo is as important for a tight stow on deck as it is in the hold, and the unit loads should touch one another as much as possible. Figures 9-7 and 9-8 show stowing methods for single-item and palletized unit loads.

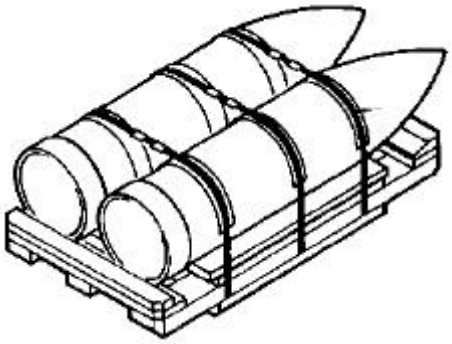

Figure 9-7. Palletized unit load

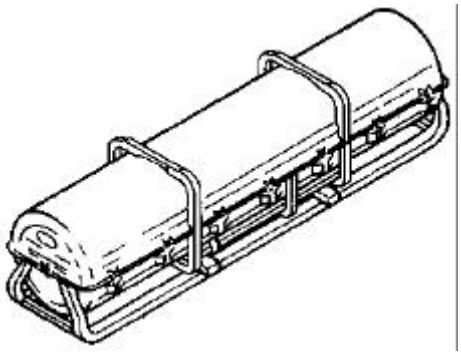

Figure 9-8. Single-item load

9-5. STOWAGE GROUPS. The explosives loaded aboard merchant ships are classed generally as rectangular or round. For stowing and securing purposes, cargo handlers group loads as rectangular unit loads which are items unitized on wood pallet, metal pallets, or skids, or as round, single-item loads which are large items loaded individually. Explosives are stowed below decks using either of the methods listed below.

a. **Block Stowage.** In block stowage, personnel stow loads in the form of tight blocks between both sides of the hold or confine the loads by other loads or wooden bulkheads if the size permits. Block-stow techniques are best because undesirable empty areas within the stow are kept to a minimum (see Figure 9-9).

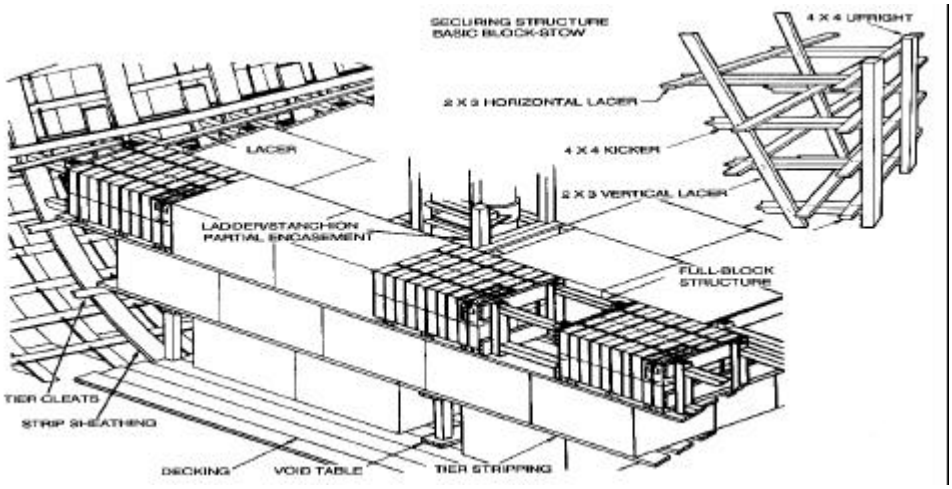

Figure 9-9. Typical block stowage, lower hold number 1

Downloaded from http://www.everyspec.com

b. **Sweatboard-to-Sweatboard Stowage.** Sweatboard-to-sweatboard stowage uses the most space within a hold but results in a greater number of small empty spaces than block stowage. These features become more pronounced in compartments with severe hull curvature. In rectangular shape areas, the technique resembles block stowage. Using the sweatboard-to-sweatboard stowage method in compartments with severe hull curvature requires considerably more manpower and time than does a straight block stow.

9-6. BOMB AND MISSILE STOWAGE PROCEDURES. Stowing bombs within a hold includes using proper tomming, bracing methods, and using separation boards between rows of pallets.

a. Personnel can stow bombs using an electric forklift. A 2- by 4-inch board extends downward at a 45 degree angle (tomming). Also, 4- by 4-inch and 2- by 4-inch boards provide support in open spaces between rows (blocking and bracing). Separation boards (dunnage) are placed between the heads of one row of bombs and the tails of another row of bombs. A head-to-tail configuration is best for stowing bombs, as it results in better space usage and less carpentry in securing. Tail-to-tail stowage of bombs is acceptable, but results in loss of space and requires more extensive securing between the heads of bombs.

b. Proper bracing must be provided in areas where bombs are stowed near the bulkheads or the sides of the ship. Similar precautions should also be taken around the hatch ladder and stanchion.

c. Boards used for all blocking and bracing operations should be at least 2 inches thick, though they may be any width.

d. Bombs weighing 2,000 pounds are individually stowed by three basic methods.

(1) ***First method.*** Cargo handlers should—

(a) Place two 4- by 4-inch timbers athwartship in the hold to form tracks on which the bombs can rest. These timbers keep the rolling bands free of the deck.

(b) Roll the bomb across the deck of dunnage and place them on the tracks, band to band (see figure 9-10, page 9-8).

(c) Block and brace bombs securely to prevent movement.

(d) Separate the second row from the first by dunnage as shown in Figure 9-11, page 9-8 to protect the head and tail fins of the bombs.

(e) Prepare a track ((a) above) to use on top of the first row of bombs for loading succeeding tiers. No floor of dunnage is required between the tiers.

(f) Place the rolling bands of the second tier of bombs directly above those of the first (see Figure 9-12, page 9-8).

Downloaded from http://www.everyspec.com

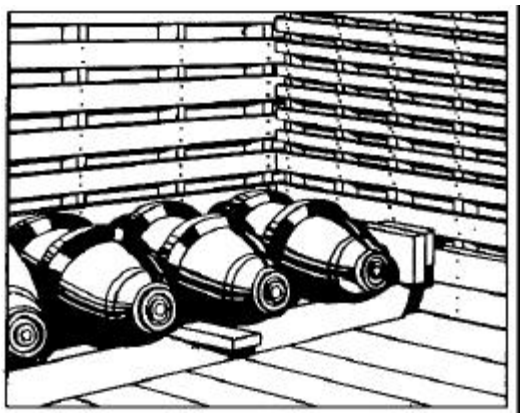

Figure 9-10. Stowing first row of bombs

Figure 9-11. Dunnage used to separate bombs

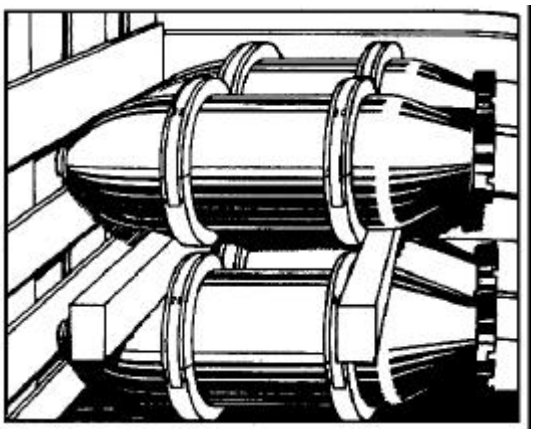

Figure 9-12. Band-to-band method of stowing bombs

(2) ***Second method.*** Cargo handlers should—

(a) Start the first row directly on the dunnage floor.

(b) Brace the bombs in the outboard row against the side of the hold.

(c) Place dunnage between rows to protect the head and tail fins.

(d) Lay 2- by 4-inch timbers athwartship to clear the rolling bands of the first tier.

(e) Lay a floor of dunnage over the athwartship timbers and continue the second tier in the same manner as the first.

Downloaded from http://www.everyspec.com

(3) ***Third method.*** In this method, cargo handlers interlock the rolling bands and turn every other bomb end for end so that the tail of one bomb is adjacent to the head of the adjoining bombs.

e. Although the methods described in "d" above deal only with fore and aft stowage, personnel may stow bombs athwartship to fill in unused space (Figure 9-13).

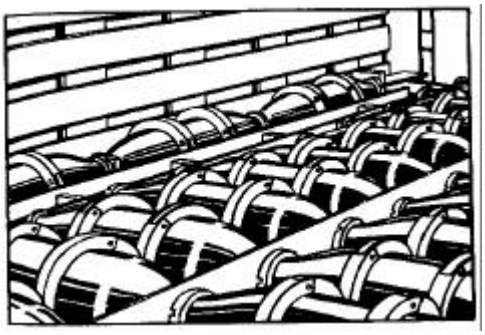

Figure 9-13. Athwartship stowage of bombs

f. The large assortment of missile components creates unusual problems for transportation terminals. Careful planning, special caution, and complete information regarding the characteristics of missile cargo are necessary for its safe, successful, and efficient handling.

(1) ***Terminal receipt of cargo***. Cargo operations personnel must obtain advance information concerning the size, weight, characteristics, packaging data, and peculiarities of the missile components to be handled. The depot originating the shipment may provide this information in the form of writing, photographs, and conferences with representatives of organizations involved in the movement. Using this information, terminal personnel prepare instructions for handling components for cargo handlers and other units concerned with the cargo handling.

(a) On receipt of missile components, cargo handlers must inspect the condition of components to determine whether the terminal should accept the shipment for export.

(b) Sometimes personnel must wear special protective clothing when handling missile propellants and oxidizers.

(c) Certain components are shipped in special containers that have temperature, pressure, or humidity gages attached to them. Responsible personnel should check these gages to ensure they meet allowed tolerances given in the instructions from the terminal.

(d) Cargo operations personnel should reject all material received at the terminal which is damaged or unacceptable for export. This material should be turned over to the technical service representative for disposition.

(2) ***Handling, loading, and storage.*** Special slings and lifting devices for transferring and loading missile components at water terminals usually accompany the shipment. Standard materials-handling equipment and watercraft can handle missile components. With the

Downloaded from http://www.everyspec.com

improvements in missile container design and the incorporation of transportation features in the construction of components, the problems associated with shipping this type of cargo are diminishing. Nevertheless, cargo planners must always carefully plan and use special caution. Standard cargo tie-down equipment, consisting of the usual bracing, shoring, lashing, and tomming is fully effective in securing the missile components.

(3) ***Temporary storage of missile components.*** Cargo handlers should—

(a) Ensure the storage area is clean, level, and well drained. They should provide some form of shelter if components are subject to weather or temperature limitations.

(b) Store dangerous and hazardous components away from overhead power lines and in areas free of combustible material.

(c) Stack cargo as instructions specify.

(d) Use the type dunnage specified in governing instructions.

(e) Restrict activity in the storage area to receiving, inspecting, and discharging cargo.

(f) Post guards and display signs for dangerous, hazardous, or classified cargo.

(g) Frequently inspect cargo to determine its condition. Also, check gages on sealed containers periodically.

(h) Comply with commodity distance tables.

(i) Ensure decontamination squads and firefighting teams are readily available where special weapons are stored.

(4) ***Cargo discharge.*** Discharge problems with missiles are generally comparable to those of other munitions.

9-7. SECURING STRUCTURES. The various types of structures used to secure cargo are discussed below.

a. **Decking.** Decking is used to prevent metal-to-metal contact between the deck and the unit load. If not used, a fire or an explosion could result. Personnel should lay decking over metal decks or tank tops to protect military explosives. Decking is not required when decks or tank tops are coated with the right kind of nonmetallic materials, such as mastic. Since the entire exterior of Class A magazines is wood, they must be completely floored.

Downloaded from http://www.everyspec.com

(1) ***Strip decking.*** Since the primary purpose of decking is to prevent metal-to-metal contact between the deck and the unit load, it is necessary to install, as a minimum, strip decking. Responsible personnel should install strip decking in compartments where metal pallets or the strapping of wooden skids bound with metal straps would otherwise contact the deck. Figure 9-14 shows the use of strip decking, also referred to as strip flooring. Since the strip decking bears only compressive loads, 1- by 6-inch lumber is adequate for stripping purposes. Work crews should cut the stripping to appropriate lengths and place it under the skids of the unit load. Crews should position the stripping crosswise to the pallet skids to minimize any possibility of the unit loads being displaced from the stripping in transit.

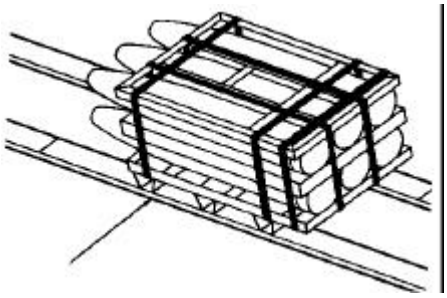

Figure 9-14. Strip decking

(2) ***Full decking.*** Full wood decking is made of lumber not less than 1 inch thick by 10 inches wide (Figure 9-15). Smaller lumber is more readily displaced and damaged by the wheels of forklift trucks. Two layers of lumber are used to construct full decking provided the bottom layer is not less than 6 inches wide and the top layer not less than 10 inches wide. Decking is laid in crosswise layers if located within a Class A magazine. This technique is preferred whenever two-course decking is used. Workers should ensure the decking is fitted tightly, edge-to-edge and butt-to-butt. However, they should leave adequate space at the hull to permit drainage of condensation runoff.

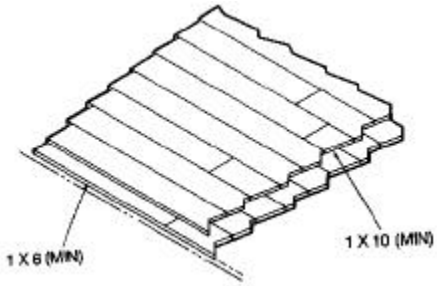

Figure 9-15. Full decking

(a) Flooring in the between-deck holds can be made using a single layer of 2- by 10-inch lumber. The floor is laid directly on the deck, edge-to-edge and butt-to-butt. Boards are laid fore and aft or athwartship. The athwartship orientation is preferred if the entire hold is to be floored, or if flooring is required only at the curve of the hull. Flooring laid in this manner will closely follow the hull contour with a minimum of exposed metal deck. If obstructions on the deck prevent workers from laying a flush flooring surface by obstructions on the deck, they may lift the flooring on a foundation of 4- by 4-inch runners (Figures 9-16 and 9-17, page 9-12). Runners are laid fore and aft or athwartships. However, spacing must not exceed 10 inches center-to-center. The work crew should leave enough space between runners and the shell plating to allow for condensation run-off.

(b) Inspection covers and fill caps often protrude above the deck surface in the lower holds in which the tops of deep tanks form the deck. Items not requiring wood flooring, such as unit loads on wooden pallets, are loaded directly on the deck around the obstruction. Workers should construct a void table block of 4- by 4-inch lumber around the obstruction and the void block. This unit load will be higher than the remainder of the loads stowed directly on the deck which creates an uneven surface for flooring. This method is used only when compartment height or characteristics of the cargo do not require that a floor be installed. If

Downloaded from http://www.everyspec.com

a floor is necessary above this or other tiers, workers must make the stow as level as possible. The surrounding unit loads are stowed in block fashion around the obstruction. A void table (Figure 9-18) is constructed to support the next tier on the floor.

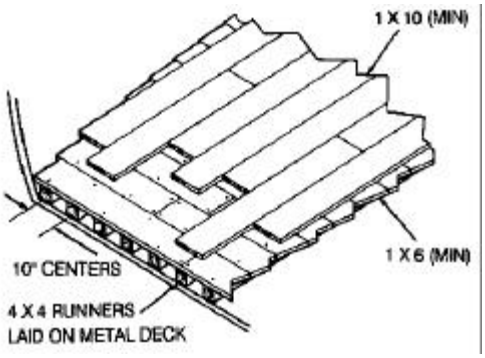

Figure 9-16. 1-inch wood decking on 4 x 4 runners

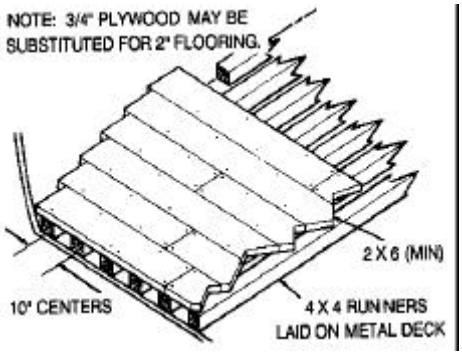

Figure 9-17. 2-inch wood decking on 4 x 4 runners

(c) In some cases, it is difficult to work around obstructions; personnel will construct flooring of two 2-inch planks laid on the metal deck (Figure 9-19). All decking (and runners) should be laid to sufficiently cover any area where forklift truck wheels can reach. However, the decking must not overhang the runners. Runners are not necessary where the tank top surfaces are level and the flooring is laid directly on the tank top, as required. When used as a stowage area for military explosives, deep tank bottoms are floored over, as required, using the same procedures prescribed for the holds.

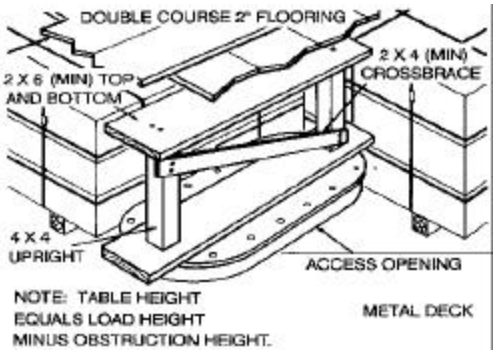

Figure 9-18. Void table

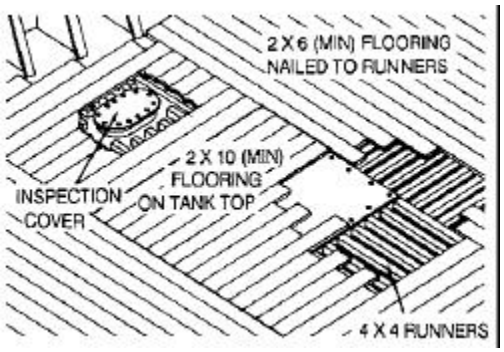

Figure 9-19. Flooring over tank top

(d) In certain holds or compartments, raised hatch edges make the installation of elevated flooring necessary in an area next to the outline of the hatch (Figure 9-20). This flooring is used only in an area large enough to provide a smooth level surface for the safe operation of forklift trucks while stowing unit loads of cargo in an area next to the hatch level. Unit loads stowed fore and aft of the hatch and in the wings of the hold are stowed on the deck or on strip decking a short distance from the brow plate or hatch level to permit safe operation of the forklift truck.

Downloaded from http://www.everyspec.com

(e) At this point, the forklifts are removed from the compartment and elevated flooring is installed. The flooring is usually laid fore and aft at the same level as the hatch. It extends from the brow plate or hatch level to the previously stowed unit loads in the wing and between the unit loads forming the alleyway. Forklift equipment can now complete the brow plate or hatch level in transferring loads from the square of the hatch to the final stowage position on the elevated flooring.

(f) Depending upon the type of cargo being stowed, a space assembly with face boards is required between the unit loads stowed on deck and those on the elevated flooring, due to the difference in height. Loads which need a space assembly usually have exposed, unsupported strapping and include items such as bombs on metal pallets, and irregularly shaped unit loads or containers.

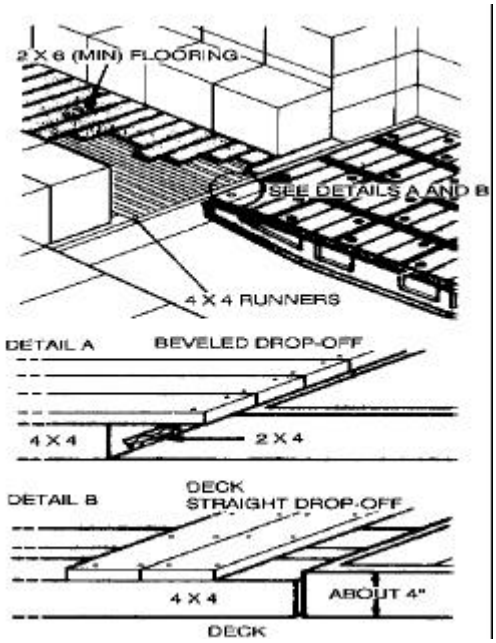

Figure 9-20. Examples of elevated flooring

(g) With the increased use of power-operated folding hatch covers on merchant ships, personnel will seldom encounter break-bulk ships using between hatch boards (see Figure 9-21). However, vessels using hatch boards are still in operation under foreign flags and must be considered. In most cases wood pallets are loaded directly on the hatch boards. Cargo handlers should ensure that all working surfaces can support the weight of the vehicle and load. Hatch covers, truck plates, or other temporary surfaces should not shift under pressure or because of vehicle movement. Cargo handlers must install, as a minimum, a double layer of 1- by 6-inch lumber over the hatch boards. The top course should be laid crosswise to the bottom layer and nailed to prevent movement. Personnel may use plywood of a minimum 3/4-inch thickness or a single layer of 2-inch lumber. In all cases, the bottom layer of 1-inch plywood or the single layer of 2-inch material will be laid lengthwise in the direction of the centerline of the vessel.

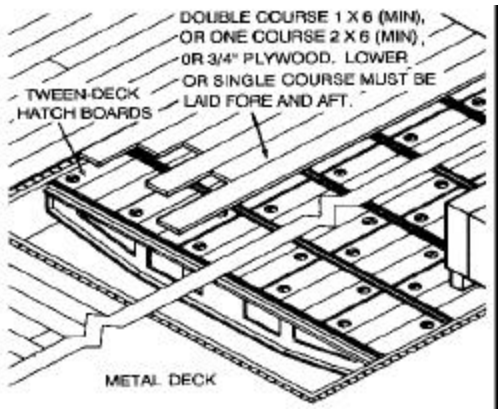

Figure 9-21. Tween-deck hatch boards

Downloaded from http://www.everyspec.com

(h) Additional space can be gained for stowing explosives in lower holds bisected by the shaft alley, provided flooring is installed. A foundation of 4- by 4-inch lumber pieces is supported at the center by the shaft alley and at the ends by 4- by 4-inch uprights on 3-inch centers. Double uprights are provided to gain additional lateral clearance with the alley. The cargo floor would extend wing to wing.

(i) When cargo is tiered to the height of the operating range of forklift trucks and additional overstow is intended, the cargo is covered over with a tier deck or machine floor. This floor is made up of two layers of 2-inch lumber. The top layer is not less than 10 inches wide, laid edge-to-edge and butt-to-butt. The lower course is at least 6 inches wide and spaced at intervals of approximately 3 inches. Certain loads, such as explosive bombs, may overhang the pallet or skid so that when loaded nose to nose, a space exists between the tops of the loads. In such cases, the lower course of decking is laid lengthwise across the narrowest dimension of the space. As the first course is laid, dunnage such as short 4- by 4-inch pieces cut at random lengths is placed on the loads at points where the decking would otherwise bear on an uneven foundation. Figure 9-22 shows how short lengths of 4- by 4-inch dunnage are placed where the unit loads would not support the decking. The top layer is laid crosswise to the bottom course and nailed securely to make sure it is stable.

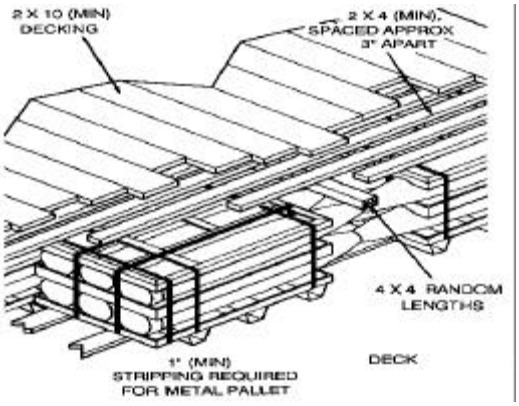

Figure 9-22. Use of dunnage to support decking

(j) Bombs are often loaded nose to butt. A lower course of 4- by 4-inch lengths of lumber is laid in the same direction lengthwise of the unit loads. The position of the 4- by 4-inch pieces is clearly shown in Figure 9-23. Each is placed directly over the bombs to span the void between unit loads. Cargo handlers should never place runners between bombs. This action would cause compressive loads on parts of the unitized pallet not intended to be pressure-bearing surfaces. The machine floor is particularly important in the stowage of explosives since it forms the foundation for more than one load. It must withstand the concentrated loads of wheeled forklifts while retaining stability. Cargo handlers should ensure that voids under the flooring subject to bending are kept to a minimum. They should make provisions for the load to be moved through uprights, particularly when using the block-stow technique.

b. **Dunnage Flooring.** When two classes of noncompatible explosives are stored one above the other in the same hold, federal regulations specify that dunnage flooring must be installed to separate the classes. Dunnage flooring is classified as either Type A or Type B.

(1) ***Type A.*** The Type A floor is made of two layers of 1-inch thick lumber not less than 4 inches in width placed edge-to-edge and butt-to-butt. The top layer is laid crosswise to the lower layer. A single layer of 2-inch thick lumber of widths not less than 6 inches is fitted tightly edge-to-edge and butt-to-butt. When using 2-inch thick lumber over hatch boards, workers should lay the lumber in a fore-and-aft direction.

Downloaded from http://www.everyspec.com

(2) ***Type B.*** Type B dunnage floor is made of a single layer of commercial 1-inch thick lumber not less than 4 inches wide. It is fitted tightly edge-to-edge and butt-to-butt.

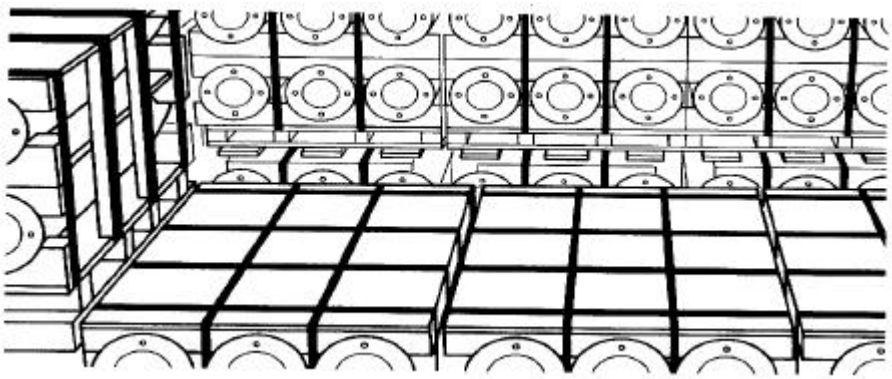

Figure 9-23. Tier decking for nose-to-butt bomb stowage

c. **End Bulkheads.** End bulkheads, which must be in place before placing loads within the stow, can be either the heat or nonheat type. The type used will depend on the location of the stow with respect to heat-radiating surfaces such as engine room bulkheads.

(1) ***Heat bulkheads.*** Heat bulkheads are recognized by tight, unbroken face boarding constructed at least 1 foot off the ship's permanent bulkhead. The smooth side of the bulkhead must always face the stowage of explosives or ammunition (see Figure 9-24). A minimum separation of 12 inches must be maintained between the boarding of the heat bulkhead and the ship's bulkhead.

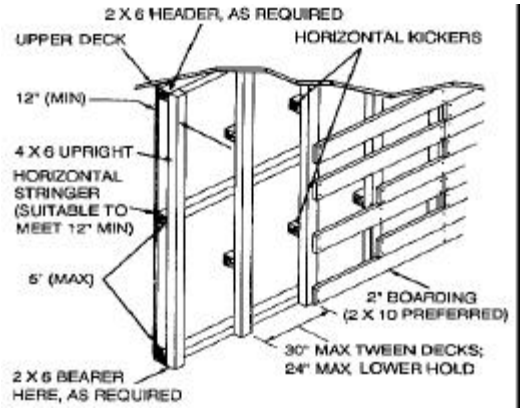

Figure 9-24. Heat bulkhead, smooth side

(a) Sheathing is constructed of 2-inch lumber, preferably not less than 10 inches wide. Federal regulations require 4- by 6-inch uprights spaced not more than 30 inches apart in the tween or shelter deck, or 6- by 6-inch lumber spaced not more than 24 inches apart in the lower hold. Since 4- by 6-inch and 6- by 6-inch lumber is not readily available, personnel may use the more abundant 4- by 4-inch stock for bulkhead construction. When workers use 4- by 4-inch uprights, they should space them at intervals not exceeding 24 inches on the between decks or on the shelter deck, or 16 inches in the lower hold. Lumber that is 2- by 6-inches is used as

Downloaded from http://www.everyspec.com

necessary for headers and bearers. Bearers are optional if wood flooring already covers the metal deck. Uprights are fastened at the top and bottom to horizontal stringers of suitable size to obtain a 12-inch separation from the upper and lower stringers.

(b) Figure 9-25 shows a heat bulkhead. Uprights (minimum of 2- by 4-inch lumber) are fitted against the stiffeners. Headers are not generally required. Bearers need to be laid only if the metal deck has not been floored over. If the ship's permanent stiffener beams exceed a center-to-center spacing of 30 inches, dunnage should be built up to match the stiffeners, or 2 1/2-inch boarding can be used. It is, however, more common and faster to build up dunnage between stiffeners since the 2 1/2-inch material is not readily available in many areas. The uprights are sheathed with 2-inch lumber. The lumber should preferably be 2- by 10-inch or 2- by 12-inch stock, or 1/4-inch plywood sheets. As an alternative method of heat bulkhead construction, crew members may use jacks to provide the necessary support for the 2-inch boarding. This type of bulkhead is used either on the smooth side or on the stiffener side of the ship's bulkhead.

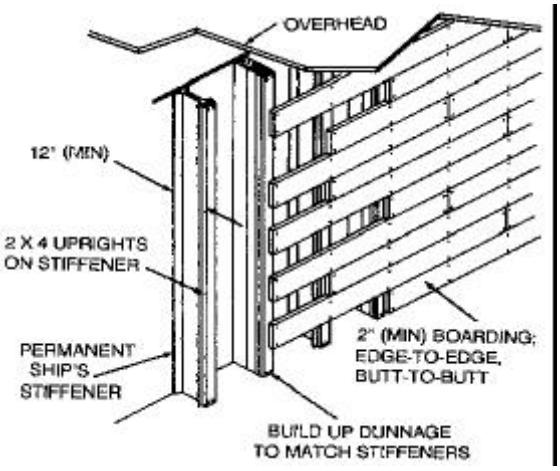

Figure 9-25. Heat bulkhead, stiffener side

(2) ***Nonheat bulkheads.*** Nonheat bulkheads are made in the same manner as heat bulkheads except that the boarding need not be fitted edge-to-edge (see Figures 9-26 and 9-27).

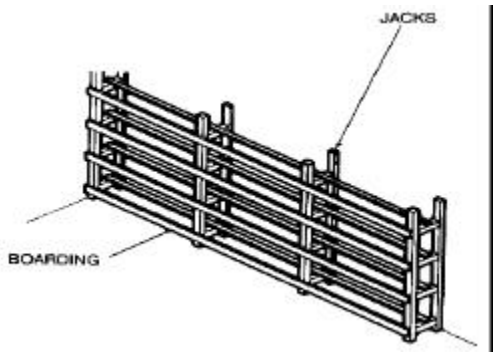

Figure 9-26. Typical nonheat bulkhead

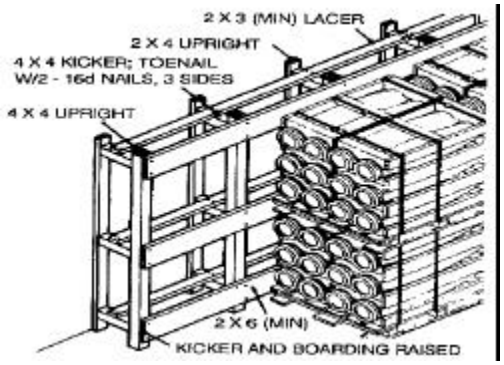

Figure 9-27. Nonheat bulkhead using jacks

(a) The bases and tops of palletized unit loads that are tiered two-high are properly supported by 2-inch boarding. Several fundamental techniques of securing nonheat

Downloaded from http://www.everyspec.com

bulkheads also apply to structures other than bulkheads. In general, boarding should be vertically spaced to provide a bearing surface for the top and bottom of each unit load in the tier. The space between the centers of uprights should not exceed 24 inches in tween deck compartments or 16 inches in the lower holds. Nonheat bulkheads constructed on the stiffener side of the ship's bulkhead are fastened together (Figure 9-28). Uprights of 2- by 4-inch minimum stock are positioned on each stiffener. Boarding is vertically spaced in such a manner as to maintain two-point contact with each unit load.

(b) When stowage ends in an area of a hold where there is no permanent ship's bulkhead to support, an end (nonheat) bulkhead is secured by the use of A-frames (see Figure 9-29). The hatch coaming and deck are used as support points for 4- by 4-inch main braces. Braces and kickers provide the required bracing of the uprights. Work crews should construct braces and kickers of 4- by 4-inch stock, cut to fit. The structure is securely laced with 2- by 3-inch lumber. Cleats under the kicker are 2- by 4-inch material.

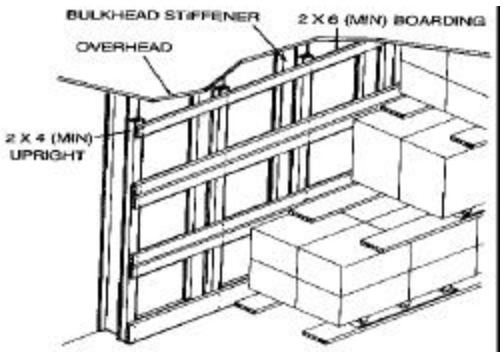

Figure 9-28. Nonheat bulkhead, stiffener side

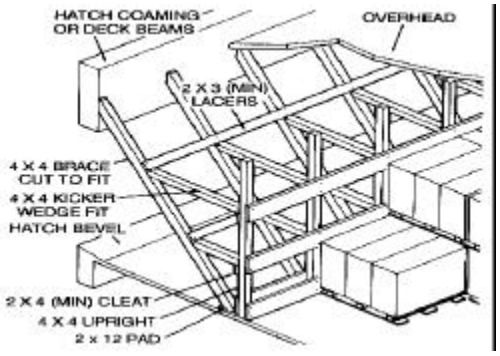

Figure 9-29. Nonheat bulkhead using A-frame

(c) In cases where the cargo is too far from the coaming to make A-framing practical, the bulkheads are braced (see Figure 9-30). Braces bear on the bulkhead at the same level as the top of the cargo. These braces are secured with 2- by 12-inch runners, which are nailed to the deck or wedge-fitted to the ship's solid structure. The length of the bracing member is determined by maintaining a 3:1 ratio (3-foot run to l-foot rise) when possible. Uprights are extended to the overhead to provide rigidity.

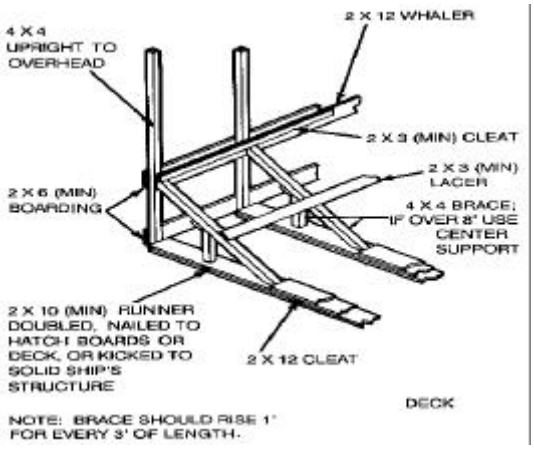

Figure 9-30. Nonheat bulkhead using deck bracing

Downloaded from http://www.everyspec.com

(d) Stowage extending to the level at the hatch edge is secured by nonheat bulkheads (see Figure 9-31, page 9-18) commonly known as fences. They are constructed of 4- by 4-inch uprights securely wedged to the overhead, and bearing against the hatch level and coaming. Boarding of 2- by 6-inch minimum stock is secured to the uprights as required by the type and size of the unit load.

(e) Nonheat securing structures are installed in lower holds against the shaft alley (see Figure 9-32). Uprights of 2- by 4-inch lumber with 30-inch maximum centers are cut level with the top of the shaft alley, over which flooring is laid to provide additional stowage space.

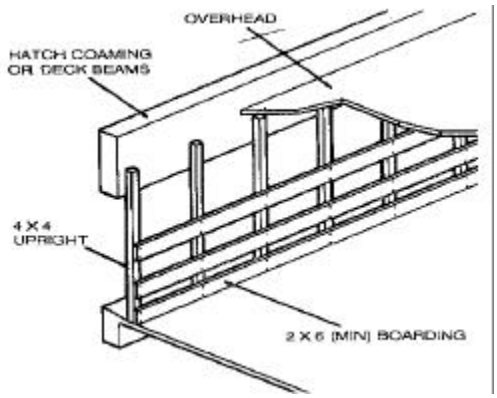

Figure 9-31. Fence at hatch edge

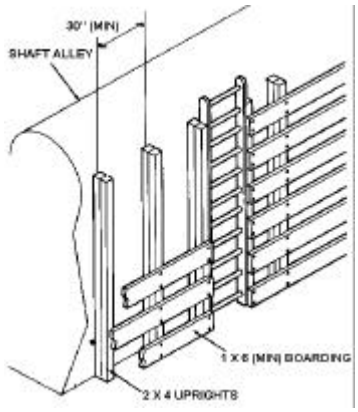

Figure 9-32. Nonheat bulkhead against shaft alley

d. **Partition Bulkheads.** Personnel construct partition bulkheads when it is necessary to separate military explosives by type or weight, or because of differences in the packaging construction (see Figure 9-33). This type of bulkhead is constructed of 2- by 4-inch minimum uprights not exceeding 30 inches in separation. Boarding material should be a minimum of 1- by 4-inches secured alternately on both sides of the uprights and spaced not more than 4 inches apart.

e. **Division Bulkheads.** If there are not enough explosives to fill the hold or compartment completely, personnel load general cargo in the remaining area. In this case the explosives must be completely separated from the general cargo by means of a division bulkhead (see Figure 9-34). This bulkhead requires commercial 2-inch boarding secured on 4- by 6-inch uprights spaced not to exceed 30 inches center-to-center for between-deck compartments or holds. Also, 6- by 6-inch uprights are spaced not more than 24 inches center-to-center in the lower holds. General shortages of 4- by 6- or 6- by 6-inch stock often dictate the use of 4- by 4-inch uprights in construction of the division bulkhead. Boarding may be of random widths, although 2- by 12-inch lumber is preferred. A smooth surface formed by edge-to-edge and butt-to-butt fitting of the boarding always faces the explosive stowage. When use of 4- by 4-inch uprights is necessary, spacing must not exceed 24 inches on the tween decks or 16 inches in the lower holds.

Downloaded from http://www.everyspec.com

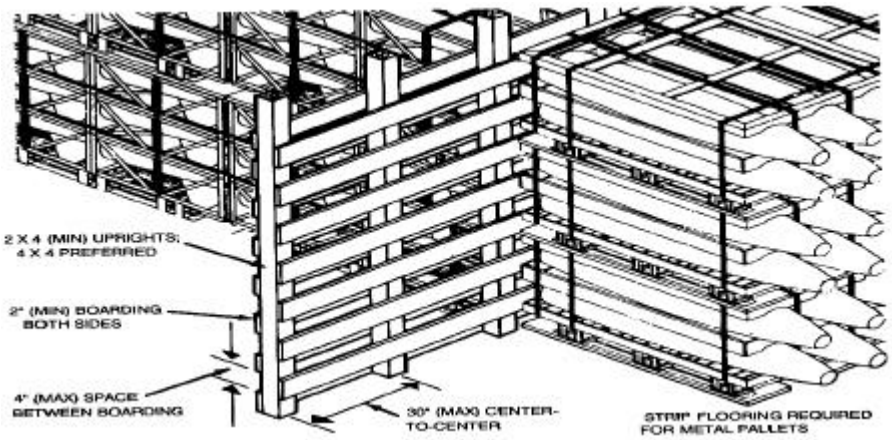

Figure 9-33. Partition bulkhead

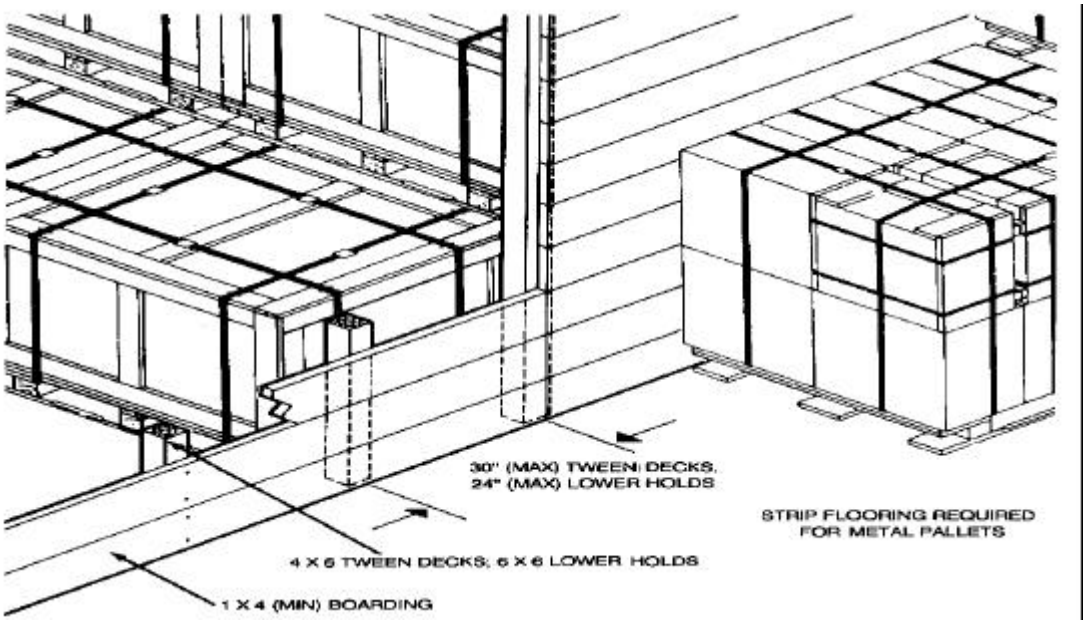

Figure 9-34. Division bulkhead

f. **Encasement.** In order to prevent contact of the cargo with the ship's structures such as beams, air vents, conduits, pipes, stanchions, or ladders, these structures must be covered with or surrounded by wood material. Encasement is either complete or partial. Requirements for complete encasement have been almost completely eliminated with the introduction of palletized cargo, but is required by federal regulation if the structure is located within an area intended for magazine stowage Class A.

Downloaded from http://www.everyspec.com

(1) ***Complete encasement*** (see Figure 9-35). If a metal stanchion or ladder is located within a Class A magazine, it must be completely encased with wood of minimum 3/4-inch thickness secured with nails or countersunk screws.

NOTE: All encasement lumber is 3/4-inch thick minimum, with widths to suit particular applications.

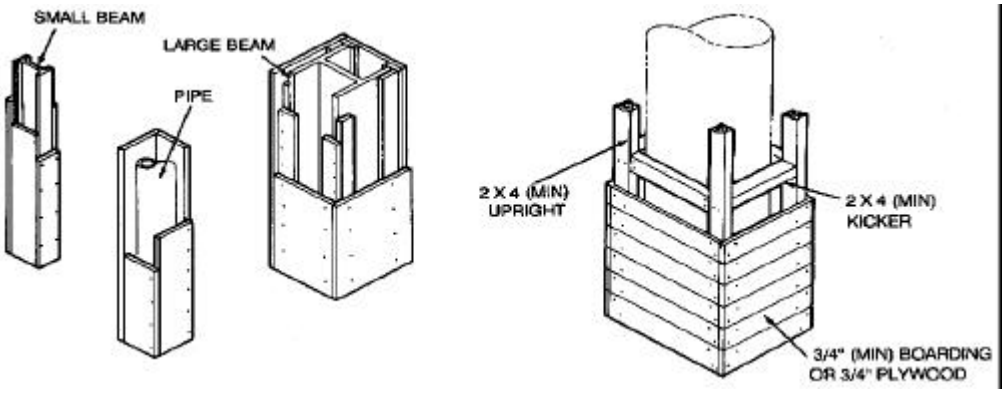

Figure 9-35. Typical complete encasements

(2) ***Partial encasement.*** Provided the obstruction is not located in a Class A magazine, partial encasement is used to protect the cargo (see Figure 9-5). Encasement procedures vary slightly, depending upon whether the sweatboard-to-sweatboard method or block stowage is being used.

(a) In the sweatboard-to-sweatboard method, obstructions such as ladders and stanchions are first encased as shown earlier in Figure 9-5. Unit loads are then stowed against the encased structure. Uprights are spaced around the obstructions. Each upright should provide a bearing surface for the cargo. Kickers of similar size stock, spaced not more than 36 inches apart, are used to secure the uprights and unitize the structure. Work crews should not construct partial encasement higher than the adjacently stowed unit loads. However, the structure or ladder should remain accessible and available for use if necessary. If adjacent stowage of rectangular unit loads is intended, uprights and kickers are constructed of minimum 2- by 4-inch stock. Overhanging unit loads are accommodated by securing boarding of minimum 2- by 6-inch lumber to the uprights at intervals the same as those of the exposed surfaces of the cargo. Finally, work crews should ensure the unit load is stowed tightly, contacting the encased structure. Figure 9-36, page 9-21 depicts a typical partial encasement of a stanchion and ladder with a rectangular type of unit load and a partial encasement of an air vent.

(b) When block stowage methods are used, compartment obstructions such as ladders or stanchions are not partially encased before placing the unit loads. Instead, personnel stow cargo in block form around the obstruction and shore at a later time in the operation. In actual practice, stowage of additional unit loads would continue before installation of shoring to achieve minimum stowage rates. Neither the ladder nor the stanchion bears any cargo weight that might result from ship motions. Instead, all forces are transmitted to the ship's

Downloaded from http://www.everyspec.com

structures through the 4- by 4-inch kickers. The ship's structures, regardless of appearance, might not be structurally efficient for support of cargo loads. All stanchions and posts must be examined carefully and protected with full-block shoring if necessary. In no case should access ladders bear cargo loads of any type. Ladders are not intended to be load bearing structures, and failure under load could result in serious degradation of the stow.

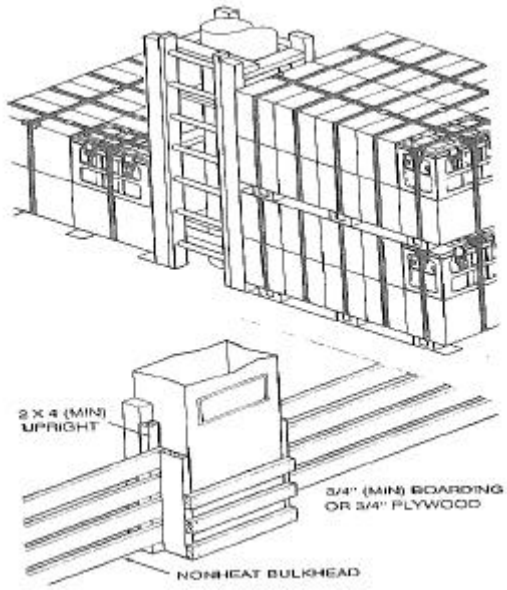

Figure 9-36. Partial encasement with rectangular load

g. **Class A Magazines.** Federal and Coast Guard regulations specify that certain classes of explosives be stowed in special portable or nonportable structures known as Class A magazines. This is to ensure adequate segregation and protection of the stow. These magazines may be constructed of either steel or wood, depending on the quantity and compatibility of explosives to be stowed in it.

(1) ***Nonportable Class A magazine.*** The complete boarding over (encasement) of all metal surfaces or structures is a basic requirement of magazine construction to eliminate the possibility of metal contacting metal and causing a spark. The interior of magazines constructed of steel must be entirely protected by wood that is a minimum of 3/4-inch thick. All ship's structures within magazines constructed entirely of wood, including overhead beams or hatch coamings within 12 inches of the top of stowed explosives, will also be boarded over. Bare steel decks within the magazine should be covered with a wooden floor consisting of at least two crosswise layers of commercial 1-inch boarding not less than 4 inches wide. Existing decking is covered with only one course of dunnage. All flooring should be fitted as close as possible edge-to-edge and butt-to-butt.

Downloaded from http://www.everyspec.com

(a) Figure 9-37 shows details for the framework of a Class A magazine constructed along the side of the ship. The horizontal braces (kickers) extend to the hull plate or to strip sheathing secured over the sweatboards. Spacing of the braces must not be over 36 inches. Regulations governing the separation of the class of explosive from the ship's skin determine the length of the braces. Uprights will not be stepped directly onto a metal deck. Instead, personnel fit a 2- by 4-inch header between the overhead and the tops of the uprights.

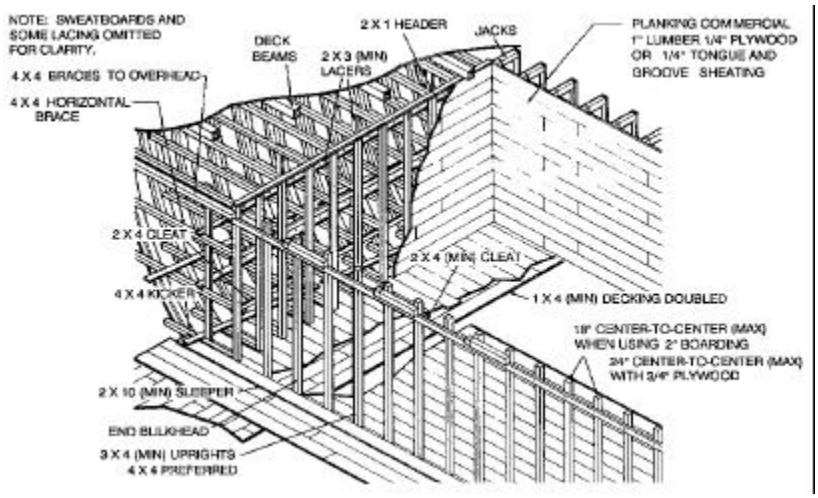

Figure 9-37. Construction details—Class A magazine

(b) During construction, workers must ensure that nails do not penetrate the magazine and that the interior boards are fitted and finished to form a smooth surface. When a metal stanchion, post, or other obstruction is located within the interior of the magazine, workers must cover it completely with wood of at least 3/4-inch thickness. Then it may be secured with nails or countersunk screws.

(c) Bulkheads forming the sides and ends are constructed of commercial 1-inch lumber, 3/4-inch tongue-and-groove sheathing, or of 3/4-inch plywood secured to uprights of at least 3- by 4-inch but preferably 4- by 4-inch stock spaced on 1-inch centers. Uprights are spaced on 24-inch centers if 3/4-inch plywood is used.

(d) When a Class A magazine measures more than 40 feet in any direction, personnel will install a partition bulkhead to divide the stowage area approximately in half. The bulkhead should extend from the deck at least to the top of the stow. Boarding should be spaced not more than 6 inches apart, alternately, on both sides of the uprights.

(2) ***Portable Class A magazine.*** Portable magazines are made for stowage of certain classes of explosives (see Figure 9-38). These magazines are constructed of wood or metal lined with wood of 3/4-inch minimum thickness. No more than 100 cubic feet plus 10 percent of explosives (gross) should be stowed in a portable magazine.

(a) When constructed of wood, the general materials and dimensions for these magazines will not be less than those required for a nonportable Type A magazine. It is recommended that only 4- by 4-inch uprights be used in construction of the magazine runners, uprights, and cover support members. Workers should ensure that spacing of uprights is not more than 24 inches on centers if 4- by 4-inch material is used. The magazine shell is constructed of minimum 1-inch commercial lumber, although 2-inch material is recommended

Downloaded from http://www.everyspec.com

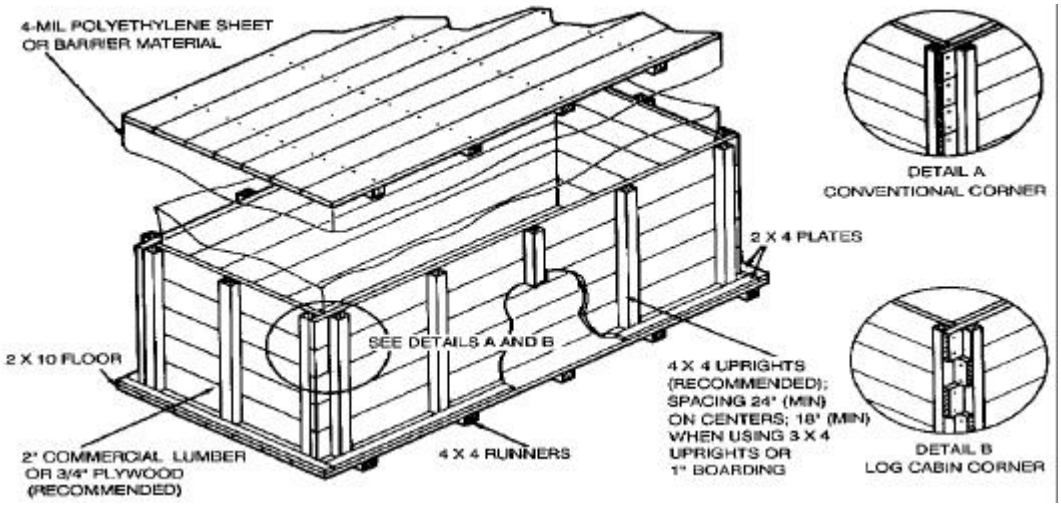

Figure 9-38. Portable Class A magazines

for added rigidity. Plywood sheathing that is 3/4-inch in width or 3/4-inch tongue-and-groove sheathing is also acceptable for construction of the shell. All inner surfaces of the shell should be smooth and free of nails, screws, or other projections.

(b) After completing the basic magazine, workers protect the magazine interior and cover with a moisture barrier of polyethylene or waterproof paper at least 0.004 inch thick. The barrier material should be installed as a single piece; however, overlap of pieces is sometimes necessary. Personnel direct water runoff toward the magazine exterior by overlapping the bottom piece over the top piece. Portable magazines stowed in holds where protection from the weather is not a factor do not require moisture-barrier construction.

h. **A-Frame Tomming.** Light items easily bump each other in heavy seas and therefore require overhead securing, known as tomming. Tomming is accomplished by tying down overhead structures to the cargo. Overhead bracing frequently uses the A-frame to provide vertical securement. Strips of lumber are laid on the stowed items and serve as the foundation for the A-frames which also prevent items from bumping together.

(1) Figure 9-39, page 9-24 shows construction details for A-frame tomming. To prevent excessive flexing of frame members as the height of the frame increases, personnel increase the required lumber similarly. In most cases, 2- by 6-inch stock is used to construct the A-frame. When the height of the overhead exceeds 10 feet, legs of the frame should be constructed of 4- by 4-inch lumber. The angle of the frame, as measured between legs at the highest point (vertex), should not exceed 45 degrees. Legs of the A-frame greater than 3 feet in length must be joined with cross members. When the length of the leg does not exceed 6 feet, workers may use a single cross member. They should secure this piece an equal distance from the end of the joined legs. Legs greater than 6 feet in length will be joined by two cross members secured at points one-quarter of the length of the leg from either end. The frames are fastened to double 1- by 6-inch or single 2- by 6-inch lumber strips placed over the cargo. Adjacent A-frames may be unitized by means of 2- by 6-inch or 2- by 3-inch horizontal lacers.

Downloaded from http://www.everyspec.com

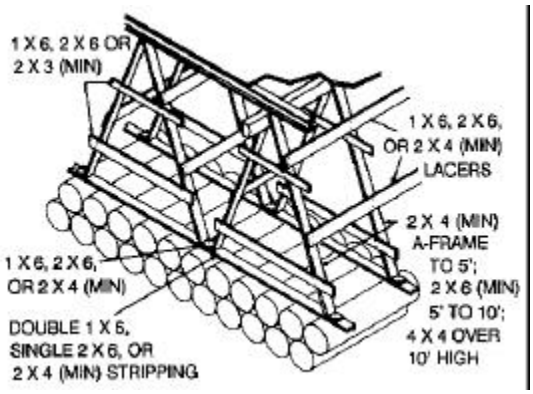

Figure 9-39. Overhead A-frame tomming

(2) Figure 9-40 shows construction details for A-frame tomming under between-deck hatch beams. Load-bearing sections of the A-frame are constructed of 2-inch lumber. However, 1-inch material is acceptable for stripping purposes.

(3) Figure 9-41 shows tomming of cargo stowed in the square of the hatch. After stowing, personnel must lock the hatch cover in place to provide the overhead support for the tomming structure.

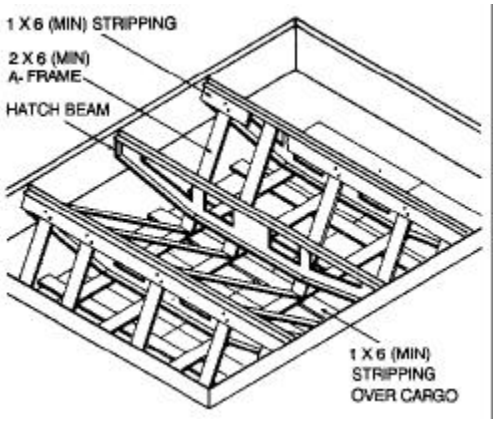

Figure 9-40. Tomming under tween-deck hatch beams

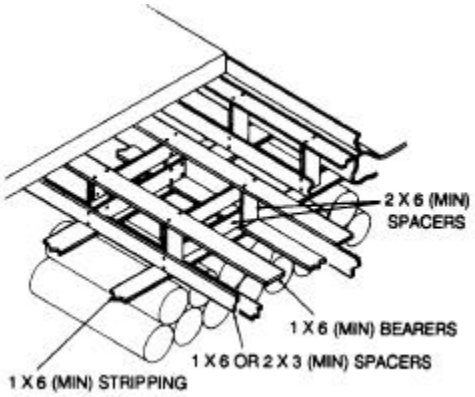

Figure 9-41. Tomming in square of hatch

i. **Stepping-Down Structure.** In some cases, particularly in the upper tween decks when the vessel loading is nearly complete, it may be necessary to reduce the number of tiers or layers of cargo as the stow progresses toward the center of the compartment. This technique is known generally as stepping down. Normally the stowing process will proceed at the same time from the fore and aft bulkheads and the wings, with the crew working toward the center of the hatch. If the

Downloaded from http://www.everyspec.com

stepping-down procedure is to be used, a securing structure similar to a partition bulkhead is built. Workers position 4- by 4-inch uprights against the tiered unit loads near each end and lace these with 2- by 3-inch or wider material. They then place the unit load against the uprights. Crew members complete the stowage by loading the central area last with remaining smaller or irregularly shaped unit loads. Full block securing is used to shore any void remaining in the stow. It may be necessary to brace the structure with diagonal pieces of lumber for added support depending on the volume or weight of the cargo in the multiple tiers behind the step-down structure. Effective preload planning is necessary to efficiently use the deck space in the center of the compartment for the remaining cargo.

j. **Open-Hold Guardrail.** Military explosives are not loaded or unloaded in the hatch at the same time that other cargo is being worked in any hold served by that hatch. In addition, all tween-deck hatch covers must be in place before the cargo can be worked in a compartment above stowed military explosives. In some cases during the loading of a ship, however, personnel must assemble prefabricated structures or install preload dunnage while loading operations are proceeding in the next lower level. To protect the personnel, a guardrail is made across the open tween-deck hatch (see Figure 9-42). The guardrail extends the full width of the hatch. It is located a minimum of 2 feet from the edge of the open hold and requires minimum rail height of 42 inches above the hatch boards. The double 2- by 10-inch plate at the base of the bracing acts as a positive stop for forklift trucks so they cannot move toward the open hatch.

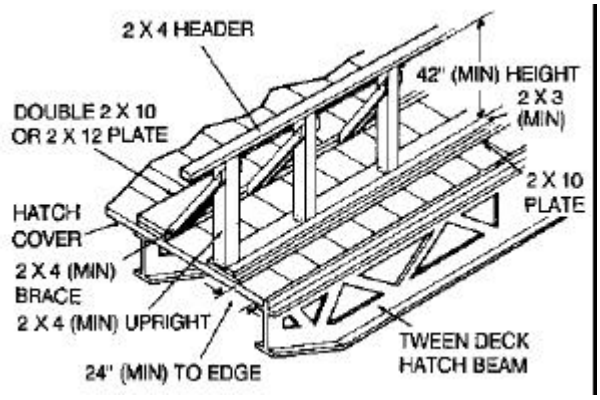

Figure 9-42. Open-hold guardrail

k. **Deck-Stow Securing.** Unit loads stowed on deck must be protected from direct sun and exposure to the elements. If the explosive's container provides adequate protection, an open deck-stow structure is permissible. Personnel should stow more sensitive items in closed structures. Construction sites on deck must not be within 20 feet of an incinerator, ash hoist, or any other heat or spark-generating source.

(1) The closed deck-stow structure (see Figure 9-43, page 9-26) is made primarily of 2-inch lumber. It is securely braced to adjacent permanent ship structures. Workers first lay random-length lumber of 1- by 6-inch minimum upon the metal deck to elevate the entire structure slightly permitting deck water to drain. Runners of 4- by 4-inch stock laid directly on the deck boards form the foundation of the structure. Construction proceeds in a similar manner to that of a portable Class A magazine. Workers lay a course of 2- by 10-inch minimum flooring and securely nail to the 4- by 4-inch runners. The walls of the structure are constructed of 2- by 6-inch minimum lumber secured to 4- by 4-inch uprights. Workers use suitable waterproof barrier material to line the interior of the structure. After placing the cargo and making a final covering with barrier material, they lay a single course of 2- by 6-inch minimum runners spaced at intervals not exceeding 6 inches on top of the barrier material. The top of the structure, constructed of 2- by 10-inch minimum lumber, is installed and securely nailed to both the side structures and the 2- by

Downloaded from http://www.everyspec.com

6-inch runners. Finally, a catwalk, if required, is constructed for access to either side of the stowage area. After fixing enough 4- by 4-inch blocking to adjoining coamings or bulwarks, workers place the entire structure upright, put it together by means of 1/2-inch wire rope cables passed over the construction, and secure it with turnbuckles. Workers must use appropriate padeyes or lashing points for this purpose; guardrails or other structures not designated as lashing points will not be used.

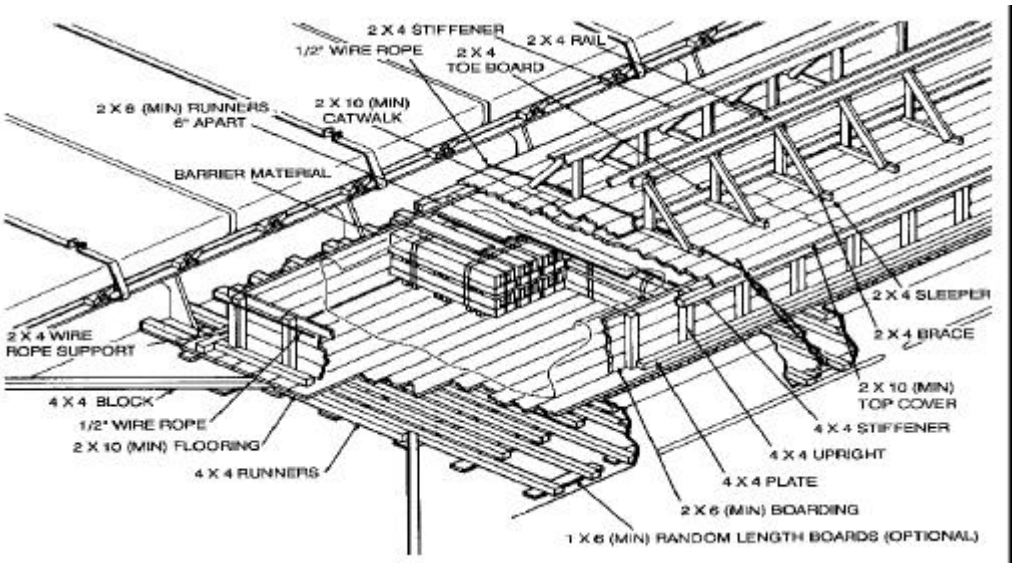

Figure 9-43. Closed deck-stow structure

(2) Cargo packaged in containers providing adequate protection from the environment can be stowed in open deck-stowed structures. Open-type construction consists of 2- by 10-inch minimum horizontal stiffeners and 4- by 4-inch uprights. Bearing plates of 1- by 4-inch stock are laid along the uprights at the deck to provide a surface to which 4- by 4-inch bracing pieces may be extended as in the closed structure. This construction permits deck wash drainage. The interior of the stowage area need not be floored if the unit loads have been palletized on wooden skids. For metal pallets, workers nail 2- by 10-inch minimum flooring to 4- by 4-inch runners laid on 10-inch centers.

(3) Another type of open deck stowage is used for items packaged in a specially designed container treated with a protective (heat-resistant) paint that cannot be penetrated by salt spray. The container is equipped with attachments designed just for securing. Before loading the item, risers made of a double thickness of 2- by 10-inch minimum boarding are placed on the metal deck athwartship to have direct and full contact with the container skids. The containers are tiered two high, strapped together before loading, and placed on the deck in groups separated from adjacent groups by a minimum distance of 3 feet. This spacing permits ready application of the various securing materials and is a requirement for stowing these types of items.

(4) As each tiered unit load is positioned, workers place spacers adjacent to the lifting bracket near each end of the container and lace them together with 2- by 4-inch minimum material. These spacers are constructed of 4- by 4-inch uprights cut to a length extending slightly

Downloaded from http://www.everyspec.com

above the height of the unit load. After workers place the final unit load, they lay a single thickness of 2- by 10-inch minimum lumber, of sufficient length to span the entire grouping, across the top at each end of the container. A suitable barrier material is placed on the unprotected sides of the container at the point where the banding would cause chafing of the container. Workers bank the whole group together with 2-inch banding material on the center of the 2- by 10-inch lumber and barrier material. They install uprights and braces of 4- by 4-inch stock and lace them together. The 1/2-inch lashing cable is attached last.

Downloaded from http://www.everyspec.com

CHAPTER 10

SPECIAL CARGO-HANDLING OPERATIONS

10-1. INTRODUCTION. This chapter discusses three new systems that allow use of ports that may be damaged or underdeveloped. These systems are LOTS, LASH, and SEABEE. This chapter also covers the T-AKR 295/296 Class LOTS operation.

a. By using these three systems, it is possible to unload cargo on the beach and truck it out. The cargo handler oversees the anchoring of waiting vessels in the stream (at sea) several miles off the coast. By not being clustered in one area, these ships are then more protected against enemy strafing and bombing.

b. LASH and SEABEE can also be used to quickly discharge ships in a fixed port. By reducing the time spent in port, they reduce their chances of being attacked by the enemy. The major advantage of all these systems is quick discharge. You must be very familiar with how these systems work to ensure speedy loading and unloading of ships.

10-2. LOGISTICS OVER-THE-SHORE OPERATIONS. Traditionally, a LOTS operation has meant an operation where a vessel anchored in open water was discharged into lighterage and the lighterage was subsequently discharged over a bare beach. This traditional definition has been expanded to include any vessel discharge or loading operation that employs lighterage. Neither the type of facility over which the lighterage is discharged nor vessel anchorage plays any part in the current definition of a LOTS operation. LOTS operations are discussed in detail in FMs 55-50 and 55-60.

a. The T-AKR 295/296 Class vessels were designed to allow concurrent, in-the-stream, discharge using two LO/LO discharge points and two RO/RO discharge points. As a result, two RRDFs will be required. One to service the sideport ramp and one to service the stern ramp. Additionally, both cranes are capable of concurrently discharging to lighterage on the opposite side of the sideport ramp. Decisions based on vessel discharge at LOTS sites will require detailed information about the available equipment being used in the operation. If no information is available, then it must be assumed that the vessel will discharge using its own lighterage capabilities. In either case, the loading priority needs to be based on the cargo discharge priority. Discharge decisions should also be based on getting the essential equipment for cargo handling off the vessel as quickly as possible. Once this is established, the discharge emphasis should be driven by the ability to run concurrent operations throughout the discharge evolution.

b. There are now three types of LOTS environments. Environments are identified by the type facility over or from which the lighterage can be discharged or loaded. These environments are the fixed-port facility, unimproved port facility, and bare beach facility, all discussed in Chapter 1.

c. **Break-Bulk Operations.** The process of discharging cargo is discussed below.

(1) ***Discharging operations.*** At a typical LOTS operation (Figure 10-1, page 10-3), break-bulk ships may be anchored from 1 to 5 miles off shore. In order to get the maximum use of the cargo-handling gear aboard each ship and keep a rapid rate of discharge, both sides of

Downloaded from http://www.everyspec.com

the vessel should be worked at the same time. Cargo from holds 1, 3, 5, 7, and so on are discharged over the starboard side and holds 2, 4, 6, and so on are worked over the port side.

WARNING: During periods of adverse weather and for sea conditions, cargo will be discharged over the lee side of the vessel only. At Sea State 2 (1- to 3-foot waves), discharging operations will be limited. At Sea State 3 (3- to 5-foot waves), it is the terminal commander's call. In almost all cases, cargo operations will stop.

(a) Cargo handlers should follow these general rules when discharging cargo vessels in the stream to lighters:

- Work lighters on the lee side of the vessel if possible.
- Rig spring lines and mooring lines so that the lighters are positioned directly below the ship's outboard booms.
- When possible, make up unitized loads of small items which can be unhooked and left in the lighter.
- Attach two or more taglines to each draft of cargo in order to control swinging.
- In rough water, land the draft at the crest of the wave. Then slack off the runner immediately to prevent the draft from being hoisted as the lighter falls in the trough of the wave.
- Do not stand in the cargo space when landing drafts in small amphibians or landing craft.
- Do not drop loads onto a lighter deck.
- For safe handling, reband damaged palletized cargo before it is discharged.
- Never pull a cargo draft into position; you might slip and fall underneath the draft. Always push the draft into place.
- Properly load, block, and secure vehicles to be carried in the lighters. The vessel master will ensure that the vehicles are inspected and deemed secure before movement.

(b) During discharge operations, personnel should be constantly alerted for new ways to speed up cargo movement. For example, when operating conditions are favorable, empty semitrailers can be backed onto landing craft. Cargo may then be loaded into the semitrailer at shipside. When the landing craft is beached, the semitrailer is towed directly from the landing craft to the depot or to the temporary area. This action eliminates a shoreline transfer operation.

(2) ***Cranes.*** Use of cranes in a LOTS operation requires highly skilled operators, thoroughly familiar with the capabilities and limitations of the equipment. Exceeding crane limit can topple the crane. When a crane is located aboard ship, or on a floating platform, the danger is increased by wind and water action. Pendulum action of suspended cargo may easily damage the ship, other equipment, and cargo or more importantly, injure personnel.

Downloaded from http://www.everyspec.com

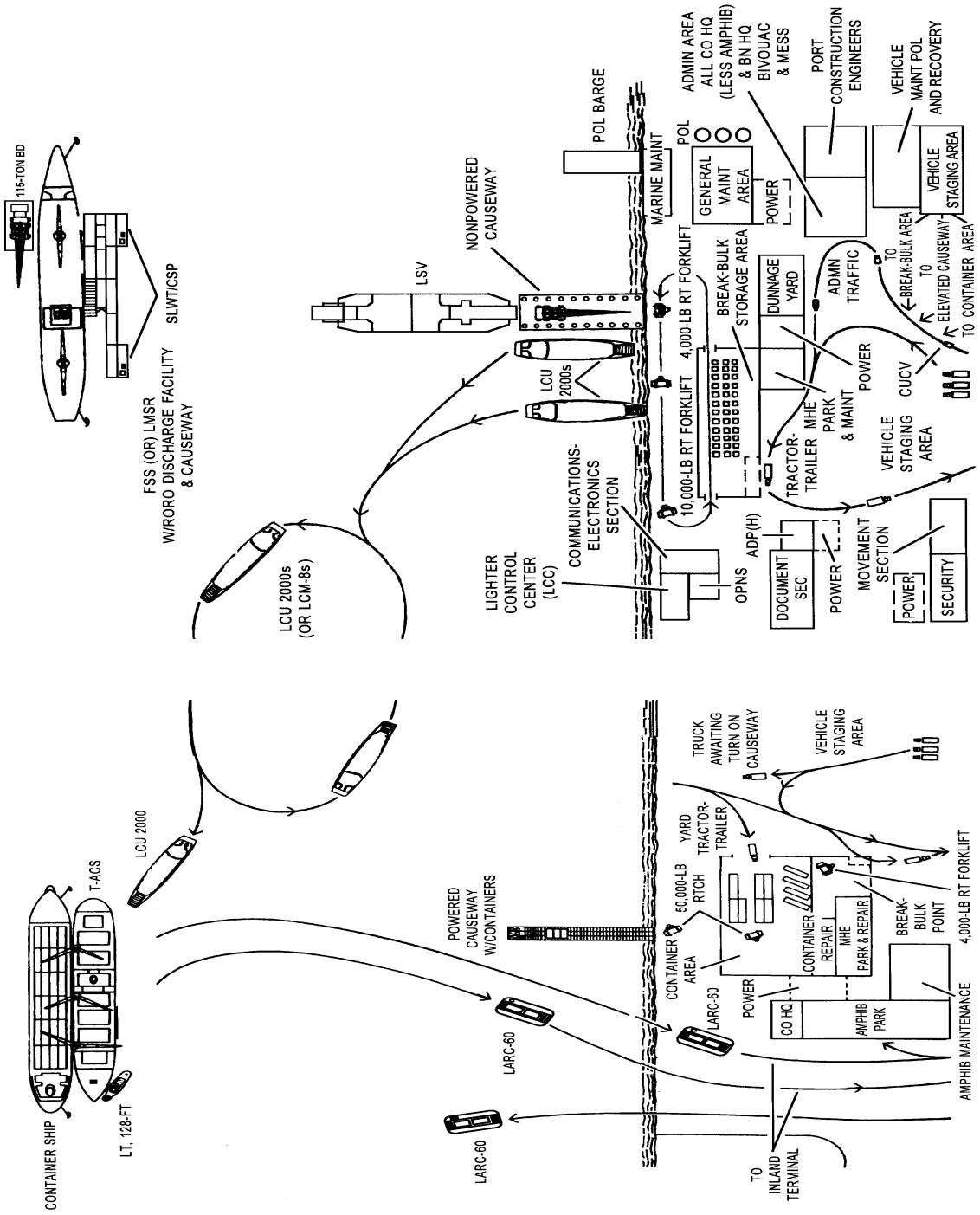

Figure 10-1. Typical LOTS operation (not to scale)

Downloaded from http://www.everyspec.com

(a) Normally with the assistance of a forklift, a rough terrain crane unloads the cargo from the landing craft and loads it into a truck. If cargo cannot be cleared for shipment immediately, it is transferred by truck to a temporary holding area.

(b) Unless protected from surf action, the sand may be washed from under the wheels of the rough terrain crane, which could then tip over when picking up a lift. If possible, operate the crane from a floating platform, or make a platform from sandbags or some other material that will hold against the washing action of the surf. Use perforated splashboard on the seaward side of the wheels to break surf action and retain sand under the wheels.

(c) In the case of non-self-sustaining ships, two cranes work the ship anchored offshore. These two cranes are positioned on a floating platform alongside it, or if it is available, TAK-C ship is used.

(d) Protect cranes from the corrosive action of salt water. A heavy coating of grease and frequent washing down with fresh water protects against this danger.

(e) No matter how skilled he may be, a crane operator requires assistance in the form of signalmen and tagline operators. The number varies with the situation, but a typical crew might include—

- A signalman in the hold of the ship, to direct the engagement of the spreader bar.
- A signalman on deck, on the near side of the ship, visible to the crane operator when visual signals are used.
- A signalman on the pier, visible to the crane operator, and positioned where the operator can direct the cargo lowering onto the transporter. (In a LOTS operation, a crew member of the receiving piece of lighterage performs this task.)
- A signalman on deck, visible to the crane operator and to the signalman in the hold.
- Two to four tagline handlers to align and steady the container as it is lowered onto the transporter.

(3) ***Other equipment and vehicles.*** Listed below are other equipment and vehicles used in LOTS operations.

(a) The RTCH is normally used in a LOTS operation. It can stack 40-foot containers (not exceeding 50,000 pounds gross weight), two high when loaded, or three high when empty.

(b) Pontoon causeways or barges will help in the unloading of motor vehicles. Causeways made of sandbags or other solid material, reaching from the shoreline to the beaching area for large landing craft on shallow beaches, can also be used. These causeways will eliminate the possibility of drowning out, because vehicles can roll ashore without passing through the water.

(c) When barges are used in discharge operations, however, stowage of cargo aboard and movement of the cargo to the hook of fixed or mobile shore-based cranes may

Downloaded from http://www.everyspec.com

present a problem. The use of forklift trucks aboard a barge and a crawler crane located alongside on a separate barge are useful.

10-3. LASH AND SEABEE OPERATIONS. The barge ship system is a relatively new concept in ocean transportation. It consists of a barge-carrying ship and a fleet of cargo lighters. Under this system, lighters loaded with cargo are discharged from the barge-carrying ship. The principal advantage of this system is its ability to load and discharge barges rapidly and minimize turnaround time. There are two types of barge ship systems in operation: the LASH and the SEABEE.

a. **LASH.** LASH ships feature a 500-ton gantry crane for loading and unloading the lighters. The lighter crane traverse the entire length of the main deck with lighters stowed two high on the hatch covers of each hold. The crane runs on heavy-duty rails located directly over the ship's side bulkheads. These bulkheads extend outward at the stern in the form of twin cantilever structures. The crane's lifting frame operates similarly to a container lifting frame. It is self-centering in the lighter's stacking posts. This frame is equipped with positive latching arrangements to ensure a safe lift.

(1) Some LASH ships also carry a self-propelled 35-ton gantry crane for the loading and unloading of containers.

(2) All lighters are approximately 61 feet 6 inches by 31 feet 2 inches by 13 feet deep. LASH lighters are designed with 36 tie-down fittings along the side walls and end bulkheads. The fittings are rated at 40,000 pounds each. They are useful for tomming down loose cylindrical items or securing large loads. Two levels of fittings extend around the entire interior of the lighter. The first level, with five fittings on each side and four on the ends, is 2 feet 6 inches above deck. The second level also has five fittings on each side and four on the ends and is located 8 feet above the deck.

b. **SEABEE.** The SEABEE is arranged differently from the LASH. The ship has three decks on which the cargo barges or container flats are stowed. Barges are towed to the ship, the ship's stern elevator is lowered, and the barges are floated over the elevator. With the barges seated on supporting pedestals, the elevator then raises the transporter moves onto the elevator and hydraulically jacks the barge up to move it to its stowage position. The barge is lowered into position and secured next. Lower decks are loaded first and discharged last. On the average, a loading cycle takes up to 40 minutes. Two barges can be lifted with each cycle.

(1) Some container cargoes are stowed on specially designed adapter flats, separate from the lighters. Cargo containers are then lifted aboard ship by the same shoreside crane used for other container lifts. A barge-mounted crane can be used in the stream. The flats, about half the length of a SEABEE barge, are put on the weather deck only. They are supported and secured in the same manner as the barges. Twenty- and forty-foot containers may be stowed aboard these adapter flats and atop the barges on the main deck. Thirty-foot containers also can be stowed within the SEABEE barges.

(2) The SEABEE barges are larger than their LASH counterparts. This gives them more than twice the deadweight and bale cubic capacity for cargo than a LASH. These barges are general-purpose dry cargo units fitted with lift-off construction which greatly decreases the likelihood of cargo damage from flooding or collisions.

Downloaded from http://www.everyspec.com

c. **Preload Operations.** LASH and SEABEE operations follow the same general principles of loading that govern any oceangoing vessel. However, some preload procedures are special to LASH and SEABEE operations.

(1) On lighters equipped with removable hatch pontoons, only remove as many covers as necessary to load the barge safety. Leaving the remaining covers in place reduces start-up and cover-up delays. In addition, this practice provides greater protection from weather conditions. Also, hatch covers left in place make an acceptable location for the cutting or assembly of dunnage.

(2) Remove hatch covers by using a four-leg sling at least 10 feet in length. Covers should always be lifted vertically, since dragging them along a hatch cover will damage the waterproof gasket on the underside. This will result in the lighter losing its weatherproof seal. Stack covers on a flat surface to prevent distortion and additional gasket damage.

(3) Report lighters arriving with damaged or missing gaskets to the shipping contractor.

(4) Check the lighters to determine if there is any leakage in the void spaces of the double hull. Any water taken on by the lighter will decrease the maximum amount of cargo weight that can be stowed. A fully loaded lighter with water in its void spaces could easily exceed the capacity of the ship's gantry crane. To determine accurately if any water is present in the void spaces, take soundings through plugs on opposite corners of the lighter. Take care to keep the sounding plugs tightly in place.

(5) Maintain inspection policies for lighters that are identical to policies for merchant-type ships. One exception is that each lighter is considered to be a separate compartment. Each must be signed off individually by authorized loading personnel, inspectors, and shipping contractor representatives.

d. **Preliminary Stowage Plans.** A preliminary stowage plan including the cargo, the load weight, and the dimensions of the individual unit loads should be developed for each lighter (Figure 10-2). In order to use the rectangular stowage area of the lighter efficiently, cargo handlers should block-stow the cargo. Because of the relatively narrow width of the lighters, maximum space usage requires rectangular unit loads to be placed in different directions. In each case, the proper positioning of the loads is reflected by the preplan.

e. **Final Stowage Plan.** In the final stowage plan, the commodity description, number of pieces, tonnage, and port sequence are entered as shown in Figure 10-3. Empty spaces within the cargo stow are caused by cargo sizes that are not even multiples of the lighter's interior dimensions or by stacking posts and access ladders that extend into the cargo area. The different ways of shoring these voids determine the types of block stow that may be used in loading lighters. The types of block stow discussed in this chapter are block stow, staggered block stow, and modified block stow.

Downloaded from http://www.everyspec.com

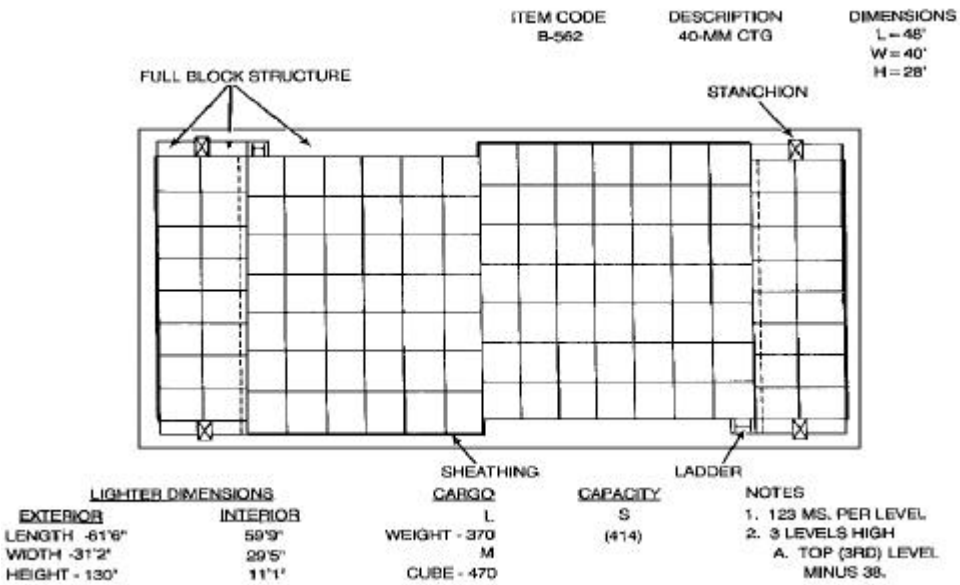

Figure 10-2. Lighter prestowage plan

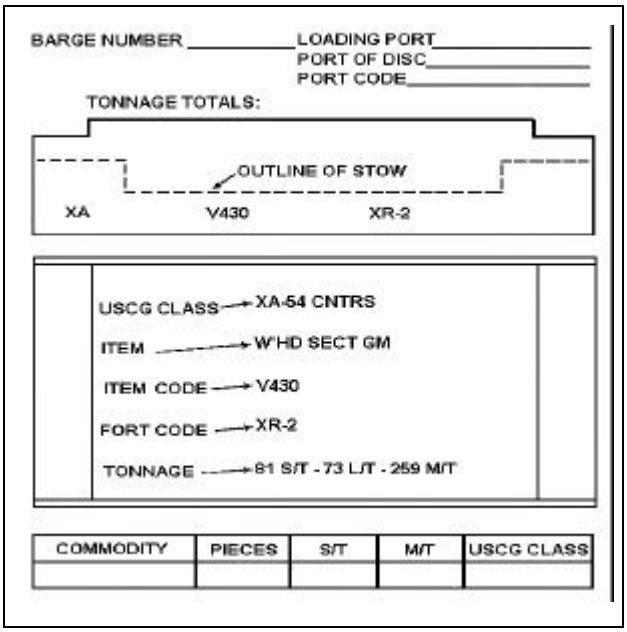

Figure 10-3. Final stow plan

f. **Block Stow.** Before building encasement structures and installing sheathing material, cargo handlers begin block stowage at both ends of the barge. The cargo may be stowed alternately against each side, and can continue to be loaded by moving toward the centerline. Empty spaces should be planned along the athwartship and the longitudinal centerline. For all practical purposes, the lighters are considered an amidship tween deck compartment. Figure 10-4, page 10-8 shows the development of a block stow in a LASH lighter.

Downloaded from http://www.everyspec.com

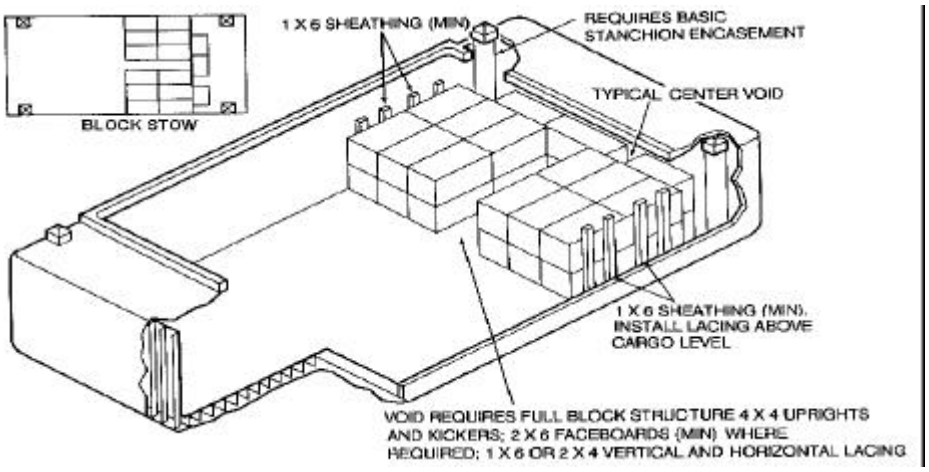

Figure 10-4. Block stow

g. **Staggered Block Stow.** The procedures for this type of block stow are discussed below.

(1) This variation of the conventional block stow pattern calls for cargo to be stowed tightly against the diagonally opposite side bulkheads of the lighter. Cargo handlers should start the stow at each end of the lighter. Cargo should be stored in a tight pattern across the lighter until the last load is fitted into place. The empty space that remains between the completed stow and the hull of the lighter is shored with a full block structure. The structure is similar to the one constructed on the lengthwise centerline in the conventional block stow technique. Cargo handlers should continue stowing by moving back toward the athwartship centerline. The remaining empty spaces are shored with full block structures.

(2) The staggered block stow pattern is shown in Figure 10-5. The lighter remains balanced by offsetting the loads in opposite directions around the long centerline. Staggered block stow allows for easy operation of the forklift truck in the square of the hatch. This is because these stowage operations take place in opposite corners of the lighter. Sheathing and encasement structures are required only on one side and at the ends of the barge. In addition, the smooth steel construction of the lighter's side bulkhead allows for block structure of cargo. This is especially true if the cargo stow consists of mixed commodities of varying dimensions. Figure 10-5 shows a typical shoring structure installed at the hull when using the staggered block stowage technique.

h. **Modified Block Stow.** The procedures for this type of block stow are discussed below.

(1) When the hull angles are almost straight up and down, overstowed unit loads are no longer offset and the sweatboard-to-sweatboard technique resembles block stowage. However, since the empty spaces in the center of the stow can still be shored in accordance with

Downloaded from http://www.everyspec.com

sweatboard-to-sweatboard procedures, the modified block stowage pattern can be used (Figure 10-6).

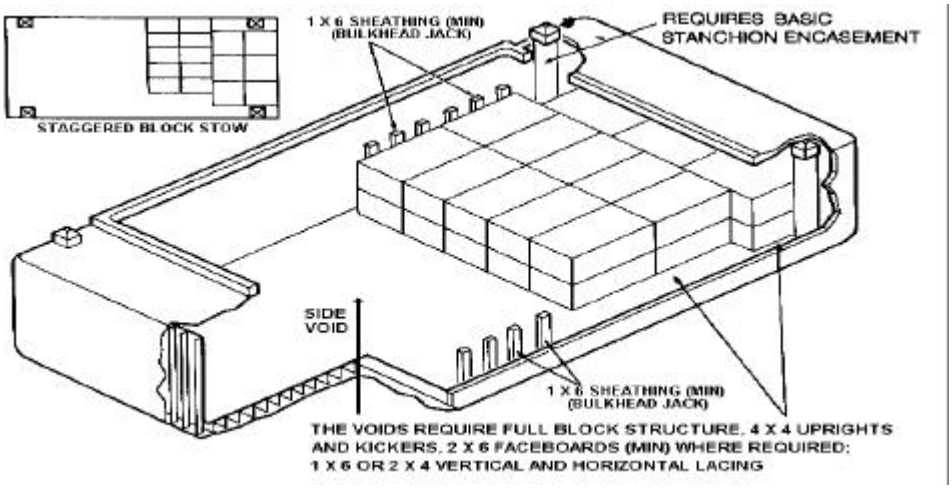

Figure 10-5. Staggered block stow and bulkhead jack

(2) As with conventional block stow, stowage operations begin at both ends of the barge with workers placing cargo tightly against sheathing and basic encasement structures. Voids that occur in the center of the stow are staggered between tiers so that they do not occur directly over each other. Voids in the lower tiers that are less than one-third the width of a unit load do not require shoring. Large voids require vertical support and use of a void table. Only voids in the top tier require full block structures. Detailed void shoring techniques are discussed in TM 55-607. Unlike the conventional sweatboard-to-sweatboard stowage technique, tier stripping is not normally required. This is because palletized unit loads are not offset and voids never occur under two unit loads. Skidded unit loads of items palletized on metal adapters require tier stripping for adequate support. The modified block stowage pattern eliminates the need for large full block structures. Only basic encasement, shoring, void tables, and top tier block structures are required.

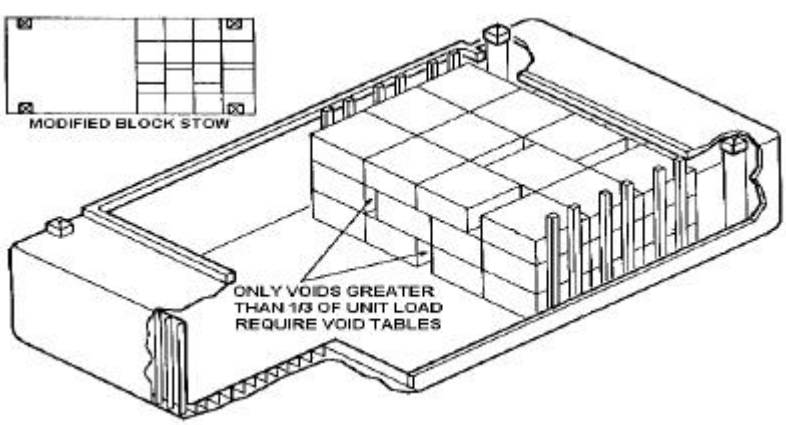

Figure 10-6. Modified block stow

Downloaded from http://www.everyspec.com

i. **Stowage Arrangements.** When stowing cargo in lighters, cargo handlers stow barges aboard the ship in the athwartship direction. Thus, cargo placed fore and aft with respect to the lighter is actually positioned athwartship with respect to the mother ship. Overhanging unit loads which are stowed both in the fore-and-aft direction and athwartship within a lighter should be positioned with their greatest bearing surface against the sheathing.

10-4. BLOCKING AND BRACING ABOARD LIGHTERS. Since lighters are an individual dry cargo hold, the general blocking and bracing techniques presented in Chapter 8 apply. Unlike a break-bulk cargo vessel, the basic interior dimensions of a lighter do not vary significantly for different designs. Consequently, many dunnage structures are prepared in advance of the actual loadout operation. Here are some procedures for blocking and bracing structures unique to lighter loading.

a. **Sheathing.** Sheathing is required between the cargo and the smooth steel sides of a lighter. The sheathing protects cargo from moisture condensation on the inner bulkheads. Since this material will normally be in compression between the cargo and the smooth steel sides of the barge, cargo handlers should use only 1- by 6 inch or 2- by 4-inch material above the cargo. The use of reclaimed lumber is also acceptable for sheathing. However, the lumber must be inspected to ensure that all nails have been removed. In situations where empty spaces are left at the hull of the barge and full block structures must be built, sheathing should be at least 2- by 4-inch lumber in order to receive nails from the kickers.

b. **Encasements.** The four stacking posts and two access ladders found in lighters must be encased to provide a firm bearing surface for the stowage of cargo. Whenever cargo is to be stowed tightly against these obstructions, basic bulkhead jacks are constructed (see Figure 10-5). Since the sizes and location of each of these obstructions is known, the shoring structures will not vary in size and can be made in advance. Figure 10-7 provides construction details for encasement of a stanchion which are the same as those for a stacking post. The stacking post protrudes approximately 14 inches into the lighter hold. Jacks should be spaced on either side of the stanchion. Nail boards measuring 2 by 6 inches over the face. Boards should be spaced equally with the top and bottom of the unit loads stowed against them.

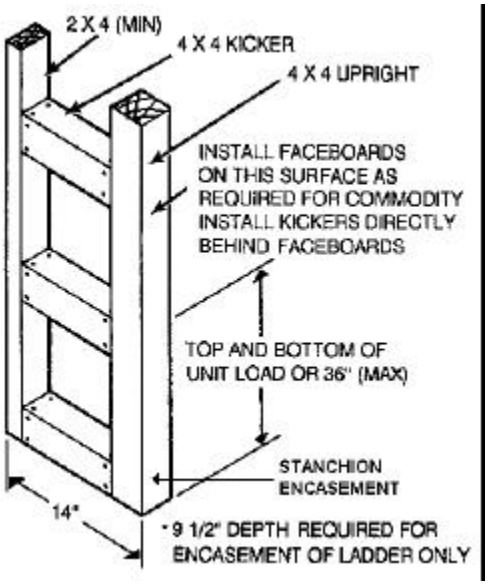

Figure 10-7. Ladder and stanchion encasement

Downloaded from http://www.everyspec.com

(1) The encasement structure should extend out an even number of rows of cargo. On the sides of the barge containing the access ladders, the structure is extended out to include the ladder, which protrudes approximately 9 1/2 inches into the compartment. Normally, the encasement structure would be extended flush over the ladder (see Figure 10-7).

(2) Where stowage space is at a premium, the encasement structure is "cut back" after the stacking post, using 9 1/2-inch jacks on either side of the ladder. In any case, cargo handlers should never secure cargo so that its weight is borne by the access ladder because the ladder is relatively weak.

c. **Partial Stow Bulkheads.** Normally, it is better to stow cargo in lighters in full layers to minimize time-consuming securing of the partial top layer. For many shipments, however, maximum space utilization requires the stowage of a partial top layer. In these situations, cargo handlers secure the partial top layer by using either a step-down structure or a diagonally braced bulkhead.

(1) Use of a step-down structure, described in TM 55-607, is the simplest way to secure a partial top layer (Figure 10-8). Cargo handles should stow cargo the required number of tiers high to a point shown on the preplan. At this point, two 4- by 4-inch uprights should be placed against each stack of unit loads, and laced from behind with 1- by 6-inch or 2- by 6-inch material. Face boards must be installed before placement of the upright when required (usually for overhanging unit loads). Cargo handlers should resume cargo stowage on the other side of the structure at a reduced height. Step-down structures are not to be used when stepping down cargo more than one tier. Also, these structures should not be used when the cargo on the lower side of the structure is lighter than the higher stowed cargo. Instead, cargo handlers should install a diagonally braced bulkhead. In addition, a step-down structure requires approximately 4 inches of space in the stow for insertion of uprights whenever it is used.

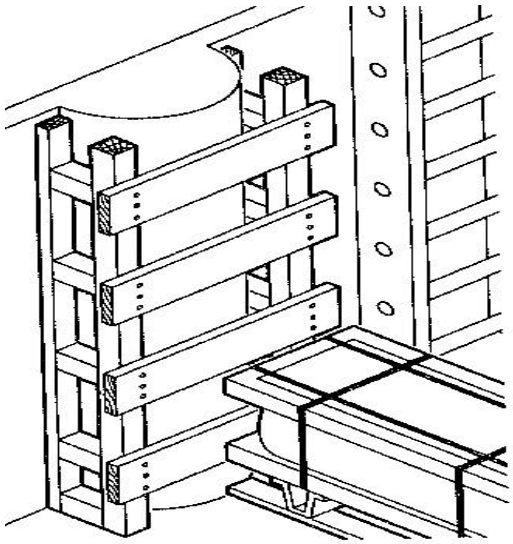

Figure 10-8. Step-down structure

(2) A diagonally braced bulkhead, in addition to providing great strength, is used to secure a partial top layer in a lighter. This bulkhead is especially useful where a tight stow does not permit the insertion of uprights between rows of unit loads, as required for a step-down structure. Figure 10-9, page 10-12 shows the construction details of this bulkhead and its usage in lighters. It should be noted that the runners of the bulkhead run to another bulkhead at the other end of the barge where the opposite half of the partial top layer is secured.

Downloaded from http://www.everyspec.com

d. **Division or Partition Bulkheads.** These types of bulkheads are used in lighters whenever the items of cargo need to be separated because of incompatibility and cargo configuration.

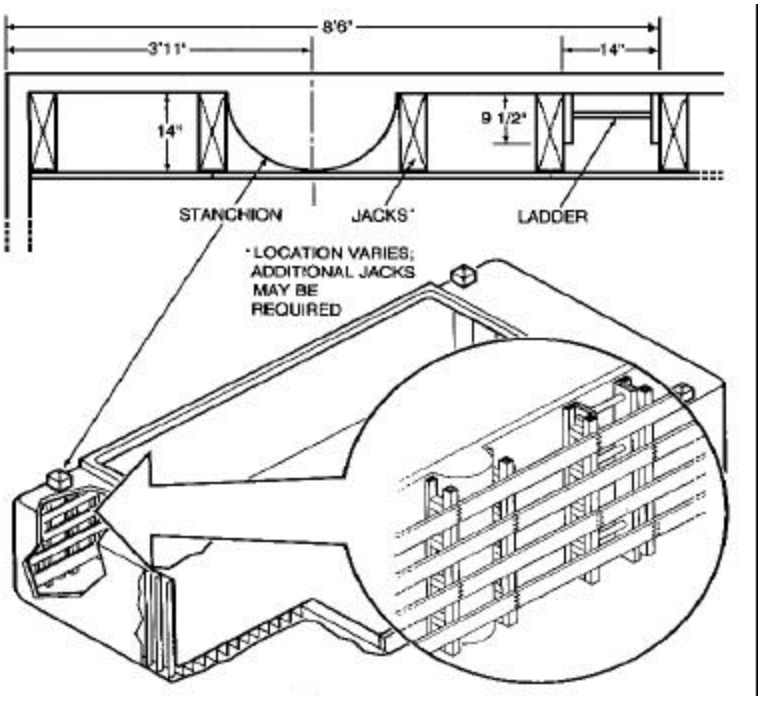

Figure 10-9. Diagonally braced bulkhead

(1) Figure 10-10 shows the construction of a partition bulkhead in a LASH lighter. For compatibility purposes, present Coast Guard policy considers a LASH lighter's equivalent to be a compartment on a merchant ship.

(2) Cargo handlers should shore voids occurring within the cargo stow in accordance with block stow void shoring techniques. Normally, two 4- by 4-inch uprights are placed against each stack of unit loads on the sides of the void. Cargo handlers should kick the uprights against each other, using 4- by 4-inch lumber, and lace them together with 1- by 6-inch or 2- by 4-inch material. If the staggered block stow pattern is used, the void will occur along the side of the barge. Cargo handlers should use 2- by 4-inch uprights on the side of the full block structure against the steel hull. If the modified block stow pattern is used, top tier voids are shored with the full block structures. Face boards are used to resist forces in the opposite direction of the kickers. These boards must be cut to the exact width of the unit loads. Void tables are constructed where needed for lower tier voids. The height and width of the tables should match that of the adjacent unit loads. Crew members should construct both the full block structure face board assemblies and the void tables in advance for specific unit loads.

Downloaded from http://www.everyspec.com

e. **Tomming.** Tomming of loose cylindrical, light, or shock-sensitive items aboard a barge is difficult because of the absence of overhead structures. A-frame tomming structures are used at the fore-and-aft areas of the barges, since the small deck area provides limited overhead structure. Cargo stowed in the square of the hatch that approaches the hatch covers in height requires tomming. In other situations, the use of wire rope tie-downs and turnbuckles is recommended. The recessed tie-down fittings located along the hull of the barge are used for hook-in points. Cargo handlers should use dunnage over the cargo to prevent chafing.

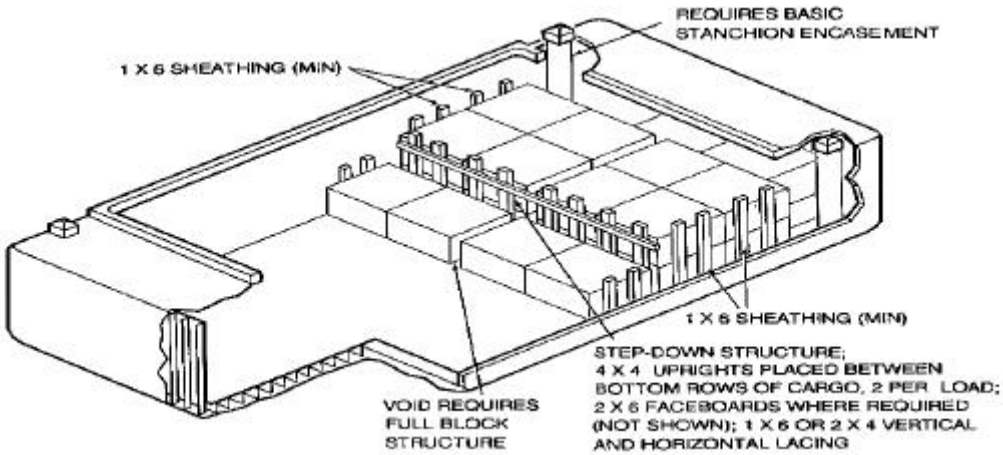

Figure 10-10. Partition bulkhead

Downloaded from http://www.everyspec.com

CHAPTER 11

SAFETY IN TERMINAL OPERATIONS

11-1. INTRODUCTION. Safety is the responsibility of each and every person working in a terminal. Supervisors have the responsibility of making sure that personnel working under their supervision are performing their duties under safe conditions.

11-2. VESSEL ACCESS. The different methods of boarding and leaving a vessel are listed below.

a. **Gangways.** A gangway (Figure 11-1) is any ramp or stairway that is used to board or leave a vessel. Personnel should not be permitted to board or leave any vessel until the following conditions are met:

(1) The gangway must be at least 20 inches wide, securely fastened, and safely maintained.

(2) At night, the gangway should be lighted to keep personnel from tripping over steps or stumbling on floor ridges.

(3) Obstructions such as support bridles, dunnage, or ropes should be kept clear of the gangway so they will not block passage or cause personnel to stumble.

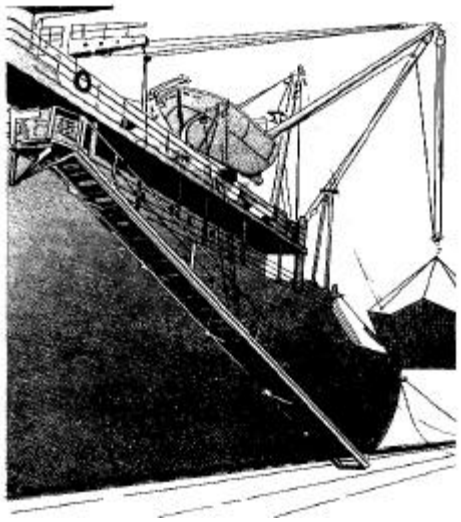

Figure 11-1. Ship's gangway

(4) When the end of the gangway overhangs the water between the ship and the pier, a net or other suitable protection should be rigged at the foot of the gangway to prevent personnel from falling into the water.

(5) When the top of the gangway rests on or is flush with the top of the bulwark, steps should be installed between the bulwark and the deck. The steps should have a handrail at least 33 inches high.

(6) If the foot of the gangway is more than one foot away from the edge of the pier (apron), a walkway (Figure 11-2, page 11-2) equipped with 33-inch high railings should be used to bridge the gap.

(7) Since the distance from the weather deck to the pier rises and falls with the tide, or as the ship is loaded or discharged, some gangways must be raised or lowered in adjustment. Most gangways used today have rollers on the bottom which automatically adjust to

Downloaded from http://www.everyspec.com

this change. However, for gangways that are not automatically adjusting, someone aboard must be assigned to periodically check these structures to ensure they are properly adjusted.

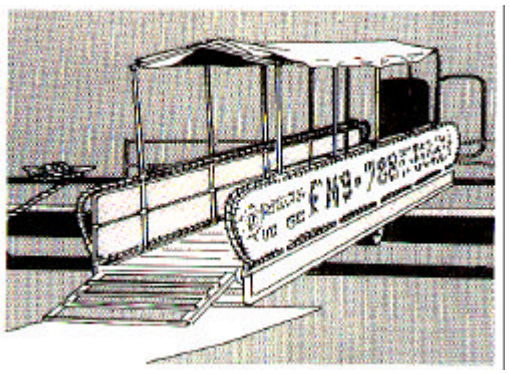

Figure 11-2. Ship's walkway

b. **Straight Ladders.** There should be at least one accessible ladder (Figure 11-3) for each gang working in a hatch. In cases where the coaming or other structural features cannot be used to gain a handhold at the top of the ladder, another means should be provided at the ladder head to serve this purpose.

(1) When any fixed ladder is visually unsafe, do not use it.

(2) Ladders must have 4 inches of clearance at the back of the ladder rungs.

(3) Ensure straight ladders are of adequate strength and long enough to extend at least 35 inches above the coaming. These ladders must be properly secured against shifting or slipping.

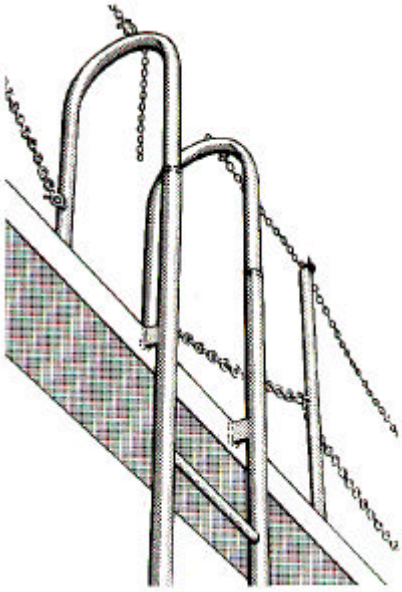

Figure 11-3. Straight ladders

(4) Should the angle of a ladder become so great that it requires personnel to walk on the edges of the treads, secure boards with cleats to top of the ladder.

(5) When it is necessary to reach stowed deck load or other cargo and no other safe means is available, ladders or steps should be used that are strong enough for support and that are properly secured. Steps formed by the cargo itself are acceptable when the nature of the cargo and the type of stowage permits this arrangement.

Downloaded from http://www.everyspec.com

c. **Jacob's Ladder.** When neither a gangway nor a straight ladder can be used, a Jacob's ladder (Figure 11-4) should be employed. Jacob's ladders are the double ring or flat tread type. They must be well maintained and properly secured. A Jacob's ladder has to hang without slack from its lashing or be pulled up entirely. When a barge, raft, or log boom is being worked alongside a larger vessel, a Jacob's ladder should be used for each gang unless other safe means of access are provided.

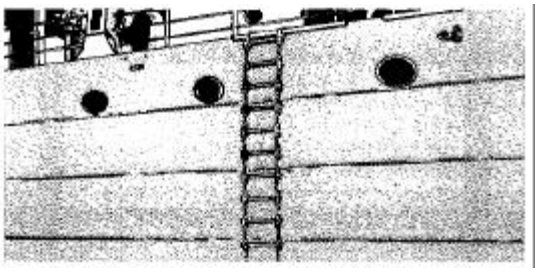

Figure 11-4. Jacob's ladder

d. **Bridge Plates and Ramps.** Bridge or car plates used afloat must be strong, equipped with sideboards along the bridged space, well maintained, and secured to prevent movement. Ramps for access of vehicles to or between vessels must be strong, provided with side boards, well maintained, and properly secured (Figure 11-5).

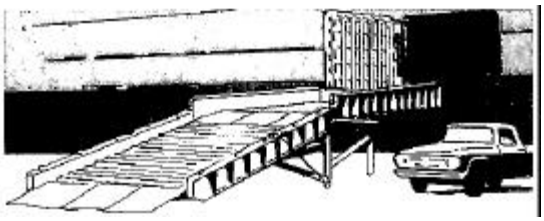

Figure 11-5. Ramp for vehicle access

11-3. OPENING AND CLOSING HATCHES. The procedures for opening and closing hatches are discussed below.

a. **Coaming Clearance.** The coaming clearance for the weather and intermediate decks is discussed below.

(1) ***Weather deck.*** When bundles of lumber or other smooth-sided deck cargo is stocked over 5 feet high and stowed within 3 feet of the hatch coaming, personnel must be careful not to bump the stack when opening the hatch cover, because the lumber could fall into the hatch. Personnel handling the beams and hatch covers should be especially careful if they are not protected by at least a 24-inch clearing from the coaming. In this case, a tautline should be stretched along the side of the deck load for their protection.

(2) ***Intermediate deck.*** Before intermediate deck hatch covers and beams are removed or replaced, supervisors should ensure there is a 3-foot working space in the following places:

- Between the stowed cargo and the coaming at both sites.
- At one end of all hatches having athwartship beams.
- At both ends of hatches with fore and aft beams.

Downloaded from http://www.everyspec.com

(a) Exceptions to the above rules may be made when a 3-foot working space is not required on the covered portion of a partially opened hatch. Also, this space is not required when lower decks have been filled to beam height with cargo that provides a safe surface on which personnel can work.

(b) Banana or other fitted gratings are considered a part of the decking when properly placed with the 3-foot area.

(c) When bulkheads, lockers, refrigerated compartments, or large spare parts are within 3 feet of the coaming, grab rails or tautlines should be provided for the protection of the personnel handling beams and hatch covers.

(d) The rules covering coaming clearance do not apply to hatches that are opened by hydraulic or other mechanical means. In all cases where the 3-foot clearance does not exist, appropriate means should be taken to prevent stowed cargo from shifting and falling into the hold.

b. **Beam and Pontoon Bridles.** Supervisors should ensure that beam and pontoon bridles meet the following requirements:

(1) Bridles must be long enough to easily reach the holes, rings, or other lifting attachments on the beams and pontoons. The bridles must be of the right strength and must have been taken care of properly.

(2) Bridles for lifting hatch beams must be equipped with toggles, shackles, hooks, or other devices to keep them from being accidentally moved from the beams. Hooks may be used only when they are hooked into the standing part of the bridle. Toggles must be at least 1 inch longer than twice the greatest diameter of the holes into which they are placed.

(3) Bridles used for lifting pontoons and plugs must have the number of legs required by the design of the pontoon or plug used. All the legs must be used. In cases where the use of a bridle requires fewer than the number of legs provided, idle legs should be hung on the hook or ring or otherwise prevented from swinging free.

(4) At least two legs of all strong back and pontoon bridles must be equipped with a fiber rope lanyard a minimum of 8 feet long in good condition. The bridle end of the lanyard may be made of chain or wire.

c. **Handling Beams and Covers.** When hatch covers or pontoons are stowed on the weather deck with the hatches, stack them not closer than 3 feet from the hatch coaming on the nonworking side of the deck. When on the working side of the deck, stack them no higher than the coaming . An exception to this is if covers or pontoons are spread one high between coaming and rail with no space between them. A minimum of 24-inch hatch coaming height should be maintained.

(1) When these requirements cannot be met due to the narrowness of the available deck area, stow pontoons more than one high against the coaming. This is so at least a 24-inch height of hatch coaming is kept on the working side of the vessel. If pontoons are stowed closer

Downloaded from http://www.everyspec.com

than 3 feet to and higher than the coaming on the nonworking side, secure them to prevent movement.

(2) When some of the small weather deck hatch boards or similar covers on seagoing vessels are removed from the beams for handling, cleaning, or other operations, do not stow these covers on covers left in place.

(3) Lay beams on their sides, or stand them on edge closer together and lashed. This does not apply when—

- The width of the flange of the beam is 60 percent or more of the height of the web.
- The flange of the beam rests flat on the deck when the beam is stood upright.

(4) Place strong back hatch covers and pontoons so as not to interfere with a safe walkway on all sides of the hatch. These covers and pontoons should be secured so they cannot be tipped over or dragged into hatches or overboard by drafts of cargo or ship's gear. Use dunnage or other suitable material under and between tiers of strong backs and pontoons. Place unshipped strong backs in an intermediate deck no closer than 6 inches to the coaming. If placed closer than 3 feet, secure strong backs so they cannot be tipped or dragged into a lower compartment. If this is not possible, move them to another deck.

(5) Lash, lock, and secure any beam or pontoon left in place that is adjacent to a section through which cargo, dunnage, equipment, or any other material is being worked. This action prevents beams or pontoons from being moved accidentally. Remove all portable, manually handled hatch covers; this includes those covers bound together to make a larger cover from any working section.

(6) Latch or pin back the roller hatch beam at the edge of the open section of the hatch so that it cannot be moved toward the open section.

(7) Secure all sectional or telescopic hatch covers of barges which open in a fore-and-aft direction against movement while they are in an open position.

(8) To cover a hatch, use hatch covers or night tents. Do not cover any partial hatch covering, such as alternate hatch covers or strips of dunnage, with a tarpaulin. Secure all hinged or folding hatch covers when in an upright position. Do not open or close hatches while other workers are in the square of the hatch below.

11-4. VESSEL WORKING SURFACE. The different types of vessel working surfaces and the safety rules for each are discussed below.

a. **Hatch Coverings.** Personnel should—

(1) Avoid loading or unloading cargo, dunnage, or other material at any partially opened intermediate deck unless the hatch at that deck is sufficiently covered.

Downloaded from http://www.everyspec.com

(2) Avoid handling or landing cargo on or over a covered hatch or between deck unless all beams are in place under the hatch covers.

(3) Report to the hatch foreman all missing, broken, split, or poorly fitted hatch covers that would jeopardize the safety of crew members. Personnel should not work in a section containing unsafe covers or in adjacent sections unless the flooring is safe. When the hatch covers or beams are not of uniform size, they should be placed only in the hatch, deck, or section in which they fit properly.

(4) Cover and guard the small trimming hatches located in intermediate decks while working in these hatches.

b. **Stowed Cargo and Temporary Landing Platforms.** Personnel should—

(1) Ensure that temporary tables on which loads are to be landed are large enough and strong enough to permit personnel to work in safety.

(2) Guard the edge of a hatch section with a safety net when it is more than 8 feet higher than stowed cargo. Otherwise, personnel may fall into the opening.

(3) Rig a safety net and securely fasten it to prevent personnel or cargo from falling when two gangs are working in the same hatch on different levels.

c. **Deck Loads.** Personnel should—

(1) Avoid passing fore and aft, over, or around deck loads, unless there is a safe passage.

(2) Avoid permitting signalmen to walk over deck loads from rail to coaming unless there is a safe passage.

(3) Provide some means of protection against falling from the deck load if it is necessary to stand at its outboard or inboard edge where less than 24 inches of bulwark, rail, coaming, or other protection exists.

d. **Skeleton Decks and Weather Deck Rails.** Personnel should—

(1) Avoid working cargo on a skeleton deck, mechanical deck, or other super structure unless temporary flooring is provided.

(2) Keep removable weather deck rails in place except when cargo operations require they be taken off. If deck rails have to be removed or replaced, crew members should do this as soon as cargo operations are completed.

e. **Open Hatches.** To protect working personnel, all open weather hatches not protected by 24 inches of coaming must be guarded. Tautlines may be used to guard open hatches at a height of 35 to 42 inches above the deck except on the side on which cargo is being worked. Portable stanchions or uprights should be used to prevent accidental moving.

Downloaded from http://www.everyspec.com

f. **Barges.** Personnel should—

(1) Not be permitted to walk along the sides of covered lighters or barges with coamings more than 6 feet high unless there is a 3-foot clear walkway, or grab rail, or tautline provided.

(2) Not be allowed to walk or work on the decks of barges needing loading unless the walking or working surfaces have been determined by visual inspection to be safe and sound. If, in the case of discharging a barge, a crew member discovers an unsound deck surface, all personnel should stop work and not resume until temporary measures to ensure a safe working surface are taken.

g. **Freshly Painted or Oiled Decks.** Personnel should not be permitted to engage in operations until freshly painted or oiled decks are made safe for walking and working by the use of suitable nonskid materials.

11-5. SHIP'S GEAR. The specific safety requirements in using ship's gear include—

a. **Certification and Limitation Requirements.** Personnel should apply the following safety rules:

(1) Before using gear, ensure that it has a valid registration certificate These certificates show that the cargo gear has been tested, examined, and heat-treated by or under the supervision of persons or organizations deemed competent to make register entries and issue certificates.

(2) Do not exceed the safe working load as specified in the cargo gear certification papers, nor the safe working load marked on the booms (Figure 11-6). Do not use unsafe rigging gear.

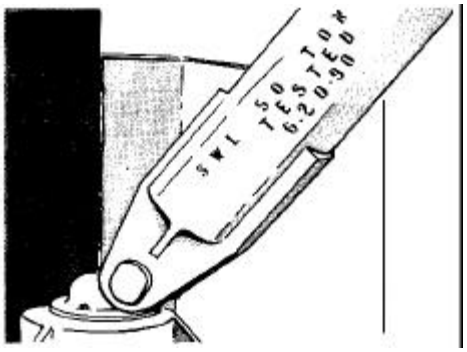

Figure 11-6. Safe working load marking on boom

b. **Equipment-Handling Requirements.** The specific safety guidelines in using ship's gear are listed below.

(1) ***Stoppers.*** Personnel should—

Downloaded from http://www.everyspec.com

(a) Ensure that chain topping lift stoppers are in good condition, equipped with manila tails, and long enough to allow not fewer than three half-hitches in the cabin.

(b) Secure chain stoppers in such a way that their links are not bent by being passed around fittings. The point of attachment must be strong and located so that the stopper is in line with the normal topping lift lead at the time the stopper is used.

(c) Keep patent stopper clamps in good condition and free of paint and dirt which would prevent their being drawn tight. Clamps should be suited to the size of the rope used.

(2) ***Falls.*** Personnel should—

(a) Avoid wing fiber rope fastenings. Secure the end of the winch fall to the drum by clamps, U-bolts, shackles, or some other equally strong method.

(b) Avoid wing winch falls with fewer than three turns on the winch drum.

(c) Avoid forming eyes in the ends of wire rope on cargo falls by making knots. In single part falls, eyes are not formed by wire rope clips.

(d) Wind the fall on the drum when the design of the winch permits so that the control mechanism moves in the same direction as the load.

(e) Rig a preventer of at least 3/4-inch diameter wire rope, wound reasonably snug and secure, when required to work in the bight formed by the heel block. This is to hold the block and fall in case the heel block attachments fail. When conditions do not allow for the fitting of a wire rope preventer of the required size, ensure the maximum possible protection is provided.

(f) Secure the heel block, if it is not being used, so that it remains in its normal operating position. This rule does not apply when the heel block is located at least 10 feet above the deck at its lowest point.

(3) ***Coaming rollers.*** Secure portable coaming rollers by using wire preventers in addition to the regular coaming clamps.

(4) ***Cargo hooks.*** Place cargo hooks (Figure 11-7) as close to the junction of the falls as the assembly permits. In no case should they be farther than 2 feet from it. This principle does not apply when the construction of the vessel and the operation in progress are of the type that fall angles in excess of 120 degrees do not occur normally. Personnel should not shorten overhaul chains by bolting or knotting them.

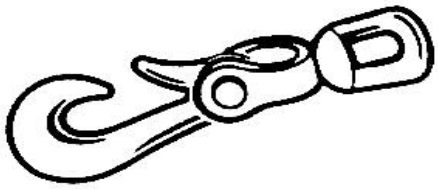

Figure 11-7. New York hook

Downloaded from http://www.everyspec.com

(5) ***Cargo winches.*** Personnel should—

(a) Guard moving parts of winches that present a hazard.

(b) Do not use winch control extension levers except for short handles on wheel-type controls. An exception is if these levers are provided either on the shop or by the owner. Such levers must be strong and securely fastened with metal connections at the fulcrum and at the permanent control lever.

(c) Do not use winches if control levers operate with excessive friction or play.

(d) Avoid using double gear winches or other winches equipped with a clutch unless a positive means of locking the gearshift is provided.

(e) Use no load other than the fall and cargo hook assembly on the winch when changing gears on a two-gear winch.

(f) Report immediately any defect or malfunction of winches to the officer in charge of the vessel.

(g) Avoid use of temporary seats and shelters for winch operators which create a hazard to the winchmen or other workers.

(6) ***Electric winches.*** Personnel should—

(a) Avoid using a winch when the electromagnetic or other service brake is unable to hold the load.

(b) Do not use winches when one or more control points, either hoisting or lowering, are not operating properly. Do not tamper with or adjust electric control circuits.

(c) Shut off power or lock control levers at the winch or operating control when winches are left unattended.

(7) ***Rigging gear.*** Personnel should—

(a) Place guys so as to produce a minimum stress without permitting the boom to jackknife when alternate positions are provided for securing guys.

(b) Spot the head of the amidship boom no farther outboard of the coaming than necessary for control of the load.

(c) Observe the following procedures when rigging or using preventers:

- Properly secure preventers to suitable fittings other than those to which the guys are secured. They are to be as nearly parallel to the guys as available fittings permit.

Downloaded from http://www.everyspec.com

- Ensure that the leads of preventers fastened to cleats are secured in such a way that the direction of the line pull of the preventer is parallel to the plane of the surface on which the cleat is mounted. This applies unless the cleat is above a chock and the hauling part is led through the chock opening.
- Adjust guys and associated preventers to share the load equally when cargo operations are being conducted by buttoning. Personnel should leave the guy slack where guys are made and intended for trimming purposes only, and where the preventer is intended to perform the function of the guy.

(d) Observe the following safety precautions when operating cargo booms:

- Do not run cargo runners across the hatch coaming.
- Do not handle drafts that exceed the safe working load of the rigging.
- Continually check all rigging during cargo operations. This is the responsibility of the hatch foreman and deck men.
- Instruct deck crews to take enough turns on a cleat or cathead while the boom is high since the weight on a topping lift increases as a boom is lowered. This ensures control of the boom when it reaches a low position.
- Avoid overloading or putting shock load on the cargo gear when the boom is at a low angle.
- Keep tension on married falls as low as possible during a lift to avoid excessive tension on the guys.
- Use slings as short as cargo permits, and keep the hook as close to the junction of the falls as possible.
- Avoid letting a loaded boom rest against a stay, shroud, or other fixed object. The boom will bend and may ultimately fail.
- Inspect booms before starting work, and use any that are visibly bent with extreme caution because of their weakened condition. Before applying power to a guy, responsible personnel should be sure that the gooseneck is free to turn by heaving on the guy by hand.
- Keep the loads as close to the rail and deck and as low to the coaming as possible.
- Avoid severe tightening of even very light loads; a difference of only a foot or two in the height of the load may increase the stress tremendously.
- Keep the heads of the two booms as close together and as high as possible to reduce the tension on the falls and the guys. This maneuver is effective at any given height in the junction of married falls.
- Place the guy at right angles to the boom, as seen by looking up from on deck, when the amidship boom angles inboard from its heel.
- Place the guy at a right angle to the boom for minimum tension when the amidship boom is fore and aft.
- Place the guy abreast of the heel or as far behind it as possible without permitting the boom to jackknife when the boom angles outward from its heel.
- Do not permit cargo falls under load to chafe on any standing or other running rigging.

Downloaded from http://www.everyspec.com

- Secure the bull wire to the gypsy head by shackle or other equally strong method where a bull wire is taken to a gypsy head for the purpose of lowering or topping a boom. Securing it by fiber rope fastening is not considered sufficient.
- Use at least five turns of topping lift wire around the cathead when it is not possible to secure the bull wire to the gypsy head in lowering or topping a boom. Also, at least five turns should be used when the topping lift itself is taken to the gypsy head.

11-6. OTHER GEAR AND EQUIPMENT. Cargo handlers should inspect all gear and equipment before use. Inspections are also to be made at intervals during the use of equipment to make sure that it is safe. Any gear that is found on visual inspection to be unsafe should not be used until steps are taken to make it safe. All special cargo-handling gear, such as shackles or chains, is to be tested as a unit before being put into use. The weight must be plainly marked on any article of cargo-handling gear hoisted by ship's gear weighing more than 2,000 pounds.

a. **Fiber Rope and Fiber Rope Slings.**

(1) Use Table 11-1 to determine the safe working load for various sizes and configurations of manila rope and rope slings. Exceptions to these safe working loads are allowed for certain items when recommended by the manufacturer.

Table 11-1. Manila rope (in pounds or tons of 2000 pounds)

Circumference (inches)	Diameter (inches)	Single Leg	60°	45°	30°
		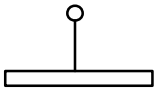	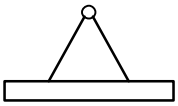	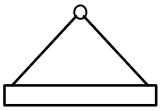	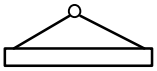
3/4	1/4	120 lbs	240 lbs	170 lbs	120 lbs
1	5/16	200	346	282	200
1 1/8	3/8	270	467	380	270
1 1/4	7/16	350	605	493	350
1 3/8	15/32	450	775	635	450
1 1/2	1/2	530	915	798	530
1 3/4	9/16	690	1190	973	690
2	5/8	880	1520	1240	880
2 1/4	3/4	1080	1870	1520	1080
2 1/2	13/16	1300	2250	1830	1300
2 3/4	7/8	1540	2660	2170	1540
3	1	1800	3120	2540	1800
3 1/4	1 1/16	1.0 tons	1.7 tons	1.4 tons	1.0 tons
3 1/2	1 1/8	1.2	2.1	1.7	1.2
3 3/4	1 1/4	1.35	2.3	1.9	1.35
4	1 5/16	1.5	2.6	2.1	1.5
4 1/2	1 1/2	1.8	3.1	2.5	1.8
5	1 5/8	2.25	3.9	3.2	2.25
5 1/2	1 3/4	2.6	4.5	3.7	2.6
6	2	3.1	5.4	4.4	3.1
6 1/2	2 1/8	3.6	6.2	5.1	3.6

Downloaded from http://www.everyspec.com

(2) Use equal sizes of synthetic fiber ropes when substituting them for manila ropes of less than 3-inch circumference. When substituting synthetic fiber ropes for manila ropes of 3-inch circumference or more, the size of the synthetic rope is determined from the formula:

$$C = O.6C_8 2 + 0.4C_m 2$$

Where:

C = the required circumference of the synthetic rope in inches.

C_8 = the circumference to the nearest 1/4 inch of a synthetic rope having a breaking strength not less than the breaking strength of the size manila rope required by this section.

C_m = the circumference in inches of manila rope required by this section.

b. **Wire Rope and Wire Rope Slings.** Use the following tables (Table 11-2) on wire rope and wire rope slings to determine the safe working loads of various sizes and classifications. For sizes, classifications, and grades not included in these tables, use the safe working load recommended by manufacturer.

Table 11-2. Independent wire rope core, wire rope and wire rope slings (in tons of 2000 pounds)

Rope Diameter (inches)	SINGLE LEG					
	Vertical			Choker		
	A	B	C	A	B	C
6 x 19 CLASSIFICATION						
1/4	0.59	0.56	0.53	0.44	0.42	0.40
3/8	1.3	1.2	1.1	0.98	0.93	0.86
1/2	2.3	2.2	2.0	1.7	1.6	1.5
5/8	3.6	3.4	3.0	2.7	2.5	2.2
3/4	5.1	4.9	4.2	3.8	3.6	3.1
7/8	6.9	6.6	5.5	5.2	4.9	4.1
1	9.0	8.5	7.2	6.7	6.4	5.4
1 1/8	11.0	10.0	9.0	8.5	7.8	6.8
6 x 37 CLASSIFICATION						
1 1/4	13.0	12.0	10.0	9.9	9.2	7.9
1 3/8	16.0	15.0	13.0	12.0	11.0	9.6
1 1/2	19.0	17.0	15.0	14.0	13.0	11.0
1 3/4	26.0	24.0	20.0	19.0	18.0	15.0
2	33.0	30.0	26.0	25.0	23.0	20.0
2 1/4	41.0	38.0	33.0	31.0	29.0	25.0

(A) – Socket or Swaged Terminal attachment.

(B) – Mechanical Sleeve attachment.

(C) – Hand Tucked Splice attachment.

(1) Do not cover protruding ends of strands in splices on slings and bridles.

Downloaded from http://www.everyspec.com

(2) Use Table 11-3 to determine the number and spacing of clips where U-bolt wire rope clips are used to form eyes. Apply the U-bolt so that the "U" section is in contact with the dead end of the rope. Wire rope should never be secured by knots except on haul back lines on scrapers.

Table 11-3. U-bolt wire rope clips

Improved plow steel, rope (diameter inches)	Number of clips		Minimum spacing (inches)
	Drop forged	Other material	
1/2	3	4	3
5/8	3	4	3 3/4
3/4	4	5	4 1/2
7/8	4	5	5 1/4
1	4	6	6
1 1/8	5	6	6 3/4
1 1/4	5	7	7 1/2
1 3/8	6	7	8 1/4
1 1/2	6	8	9

NOTE: Three clips shall be used on wire size less than 1/2-inch diameter.

(3) Take the following limitations into consideration when using wire rope:

(a) Use at least three full trucks when making an eye splice in any wire rope. However, do not use this in place of another form of splice or connection which is safe to use.

(b) Except for eye splices made in the ends of wires and used for endless rope slings, ensure that each wire rope used in hoisting, lowering, or bulking cargo consist of one continuous piece without knot or splice. Eyes in wire rope bridles, slings, or bull wires are not to be formed by wire rope clips or knots.

(c) Do not use wire rope as cargo-handling gear if, in any length of eight turns, the total number of visible broken wires exceeds 10 percent of the total number of wires. Also, wire rope is not used if the rope shows other signs of excessive wear, corrosion, or defect.

c. **Chain and Chain Slings.** Use Tables 11-4 and 11-5, page 11-14 on chains and chain slings to determine the maximum safe working loads of various sizes of wrought iron or alloy steel chains and chain slings. Higher safe working loads are allowed when recommended by the manufacturer. Proof coil steel chain, also known as common or hardware chain, is not to be used for hoisting purposes. Avoid using other chains not recommended for slinging or hoisting by the manufacturer.

(1) Visually inspect all sling chains, including end fastenings, before using them on the job. Inspect for wear, defective welds, deformation, and increase in length of stretch.

Downloaded from http://www.everyspec.com

(2) Note interlink wear that is not accompanied by stretch in excess of 5 percent. The chain is to be removed from service when maximum allowable wear at any point of the link has been reached, as indicated in Tables 11-4 and 11-5.

Table 11-4. Wrought iron chain (in pounds or tons of 2000 pounds)

Nominal Size Chain Stock (inches)	Single Leg	60°	45°	30°
	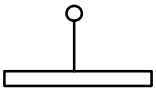	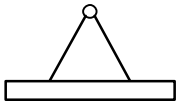	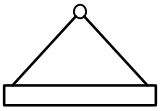	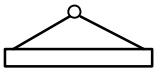
*1/4	1060 lbs	1835 lbs	1500 lbs	1060 lbs
*5/16	1655	2865	2340	1655
3/8	2385	2.1 tons	3370	2385
*7/16	3250	2.8	2.3 tons	3250
1/2	2.1 tons	3.7	3.0	2.1 tons
*9/16	2.7	4.6	3.8	2.7
5/8	3.3	5.7	4.7	3.3
3/4	4.8	8.3	6.7	4.8
7/8	6.5	11.2	9.2	6.5
1	8.5	14.7	12.0	8.5
1 1/8	10.0	17.3	14.2	10.0
1 1/4	12.4	21.4	17.5	12.4
1 3/8	15.0	25.9	21.1	15.0
1 1/2	17.8	30.8	25.2	17.8
1 5/8	20.9	36.2	29.5	20.9
1 3/4	24.2	42.0	34.3	24.2
1 7/8	27.6	47.9	39.1	27.6
2	31.6	54.8	44.8	31.6

* These sizes of wrought iron chain are no longer manufactured in the United States.

Table 11-5. Alloy steel chain (in tons of 2000 pounds)

Nominal Size Chain Stock (inches)	Single Leg	60°	45°	30°
	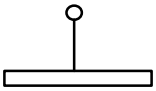	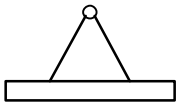	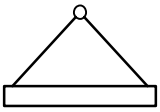	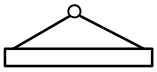
1/4	1.62	2.82	2.27	1.62
3/8	3.30	5.70	4.65	3.30
1/2	5.62	9.75	7.90	5.62
5/8	8.25	14.25	11.65	8.25
3/4	11.5	19.9	16.2	11.5
7/8	14.3	24.9	20.3	14.3
1	19.3	33.6	27.3	19.8
1 1/8	22.2	38.5	31.5	22.2
1 1/4	28.7	49.7	40.5	28.7

Downloaded from http://www.everyspec.com

1 3/8	33.5	58.0	47.0	33.5
1 1/2	39.7	68.5	56.0	39.7
1 5/8	42.5	73.5	59.5	42.5
1 3/4	47.0	81.5	62.0	47.0

(3) Remove chain slings from service if any section shows a measured increase in length greater than 5 percent, or if raised scarves or defective welds appear.

(4) Repair chains under qualified supervision. Links or portions of a chain found to be defective must be replaced by links having proper dimensions. Replacement links should be made of material similar to that of the rest of the chain. Before returning repaired chains to service, proof test them to the proof test load recommended by the manufacturer.

(5) Strengthen or normalize wrought iron chains in constant use at intervals not exceeding 6 months, using recommended procedures for annealing or normalizing. Alloy chains are not to be tempered.

(6) Avoid lifting a load with a chain having a kink or knot in it. Personnel should not shorten any chain by bolting, wiring, or knotting.

d. **Shackles.** Personnel should—

(1) Use Table 11-6 to determine the safe working loads or various sizes of shackles. Higher safe working loads are allowed when recommended by the manufacturer.

Table 11-6. Safe working loads for shackles (in tons of 2000 pounds)

Material size (inches)	Pin diameter (inches)	Safe working load
1/2	5/8	1.4
5/8	3/4	2.2
3/4	7/8	3.2
7/8	1	4.3
1	1 1/8	5.6
1 1/8	1 1/4	6.7
1 1/4	1 3/8	8.2
1 3/8	1 1/2	10.0
1 1/2	1 5/8	11.9
1 3/4	2	16.2
2	2 1/4	21.2

Downloaded from http://www.everyspec.com

(2) Mouse the pin on screw pin shackles except in cargo hook assemblies (Figure 11-8).

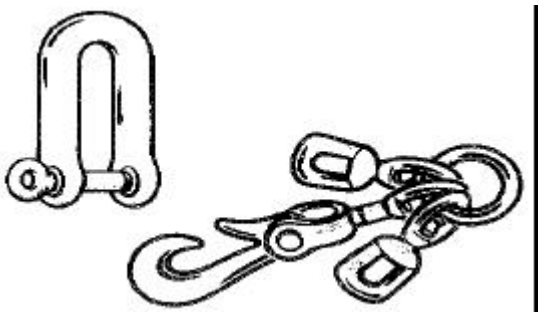

Figure 11-8. Screw pin shackles and cargo hook assemblies

e. **Hooks (Except Hand Hooks).** Use manufacturer's recommendations to determine the safe working loads of specific and identifiable hooks. Hooks for which no applicable manufacturer's recommendations are available must be tested before being used. The owner or shipper should maintain a record of the dates and results of such tests.

(1) Apply loads to the throat of the hook, since loading the point overstresses and bends or springs the hook. Inspect hooks regularly to see that they have not been bent by overloading. Do not use bent or sprung hooks.

(2) Keep the teeth of case hooks in good condition. The jaws of patent clamp-type plate hooks also should be kept in safe condition so that they will grip the plates securely.

f. **Pallets.** Properly maintain pallets so that they can safely support and carry loads. Fastenings of reusable pallets include bolts and nuts, drive screws, annular threaded nails, or fastenings of equal strength.

(1) Hoist wing or lip-type pallets by means of bar bridles only if these pallets have an overhanging wing or lip at least 3 inches long. Loaded pallets that are damaged or otherwise unsafe should be placed on ground pallets before being hoisted on or off the vessel.

(2) Ensure bridles that are used to handle flush end or box-type pallets are made in such a way as to prevent them from coming loose from the pallet under load.

g. **Chutes and Gravity Rollers.** Ensure chutes used in the manual handling of cargo are long enough and strong enough for their intended use. Keep chutes free of splinters and sharp edges which could stop or damage cargo. Also, make sure that side boards are tall enough to prevent falling of cargo.

Downloaded from http://www.everyspec.com

(1) Firmly place or secure chutes and gravity roller sections to prevent movement.

(2) Ensure gravity rollers are strong enough to withstand the weight of the materials placed on them. Rollers should be locked in position to prevent them from falling or separating from the frame. Responsible personnel should ensure that roller frames are free of burrs and sharp edges.

(3) Find a way to brake objects at the delivery end of the roller or chute.

h. **Powered Conveyors.** Ensure that readily accessible "stop" controls are provided for an emergency. No crew member should be allowed to work around a power conveyor unless an operator is on duty at the conveyor controls.

i. **Rain Tents.** When using rain tents, secure lanyards to pad eyes or other fixed structures of the vessel which are strong enough to hold them. Otherwise, secure lanyards to objects heavy enough to withstand the breaking stress of all attached lanyards.

j. **Tools.** Observe the following precautions regarding the use of tools:

(1) Visibly unsafe tools should not be used for any purpose.

(2) Portable electric (hand-held) tools must be equipped with switches that are manually held in a closed position.

(3) All portable, power-driven circular saws must be equipped with guards above and below the base plate or shoe. The upper guard should cover the saw to the depth of the teeth, except for the minimum arc, required to permit the base to be tilted for level cuts. The lower guard should cover the saw to the depth of the teeth, except for the minimum arc required to allow proper retraction and contact with the work. When the tool is withdrawn from the work, the lower guard should automatically and instantly return to the covering position.

(4) The officer in charge of the operation notifies the ship's master before using the ship's electric power for the operation of any electric tools and equipment.

(5) The frames of portable electric equipment tools, except double-insulated tools approved by Underwriters' Laboratories, Incorporated, must be grounded through a separate wire at the source of the current. Circuits grounded other than by means of the structures of the vessel on which the equipment is being used must be checked to ensure that the circuit between the ground and the grounded power conductor is of low resistance.

k. **Mechanically Powered Vehicles.** Personnel should—

(1) Make sure that all automotive equipment is in good working order, and that safety devices are not removed or made inoperative.

(2) Ensure forklift trucks are equipped with overhead guards securely attached to the machines, except as noted in (6), following. The guards protect the operator from boxes,

Downloaded from http://www.everyspec.com

cartons, packages, bagged material, and other similar items of cargo which may fall from the load being handled or from stowage.

(3) Ensure that guards do not interfere with good visibility. Openings in the top of the guard should not exceed 6 inches in one of the two dimensions, width or length. Larger openings are permitted provided no opening is larger than the smallest unit of cargo that is likely to fall on the guard.

(4) Ensure the guards are large enough to extend over the operator in all normal circumstances of truck operation including forward tilt.

(5) Ensure that associated parts do not cause the overhead guard to injure the operator of forklift trucks equipped with a single tilt cylinder.

(6) Remove the overhead guard only at times when the construction of the truck is such that the presence of a guard would prevent the truck from entering working spaces. The guard may also be removed if the operator cannot be injured by a low overhead obstruction.

(7) Equip every crawler-type, rider-operated, bulk cargo-moving vehicle with an operator's guard that protects the seated operator against injury from contact with an overhead projection. Guards and their attachment points must be made to withstand a load applied horizontally at the operator's shoulder level equal to the drawbar pull of the machine.

(8) Do not require guards on vehicles used in situations in which the possibility of the seated operator coming in contact with projecting overheads does not exist.

(9) Ensure that every truck operated from an end platform or pedal position is equipped with an operator's platform guard of a design that allows rapid and unobstructed exit.

(10) Ensure that guards are able to withstand a load equal to the weight of the loaded machine without excessive deflection.

(11) Secure forks, fork extensions, or other attachments to prevent them from being detached accidentally.

(12) Clearly post the vehicle weight, with and without removable counterweights, on all mechanically powered vehicles lifted aboard vessels.

(13) Post the rated capacity of every forklift truck, with and without removable counterweights, on the vehicle in such a way that it is readily visible to the operator.

(14) Ensure that loads in excess of the rated capacity are not lifted or carried by forklift trucks. If loads are lifted by two or more trucks working in unison, the total weight must not exceed the combined safe lifting capacity of all the trucks.

(15) Ensure that no load on a forklift truck or industrial crane truck is suspended or swung over any personnel.

Downloaded from http://www.everyspec.com

(16) Make adequate provisions, when mechanically powered vehicles are used, to ensure that the working surface can support the vehicle and load. Also, ensure that hatch covers, truck plates, or other temporary surfaces cannot be broken loose by movement of the vehicle.

(17) Ensure that, when mechanically powered vehicles are left unattended, the controls are shut off and the brakes set. Also, the forks, blade, or scoop must be placed in the lowered position.

(18) Ensure that, when forklift trucks of other mechanically powered vehicles are operated on open-deck barges, the edges of the barges are guarded by railings, sideboards, timbers, or other means. These guards prevent vehicles from rolling overboard. When vehicles are operated on covered lighters where door openings other than those being used are left open, take all necessary means to prevent vehicles from rolling overboard through such openings.

l. **Cranes and Derricks.** The safety procedures are as follows:

(1) Post the crane weight on all mobile cranes hoisted aboard vessels for temporary use.

(2) Equip all types of cranes with a durable rating chart visible to the operator. This chart covers the complete range of the manufacturer's capacity ratings for which the cranes are certified where required. The rating chart includes all operating radii for permissible boom and jib lengths, with and without outriggers, that may be fitted. It also includes alternative ratings with optional equipment affecting these ratings, and all necessary precautions or warnings.

(3) Mark operating controls or post an explanation at the operator's position to indicate the function. A boom angle or radius indicator must be fitted where necessary.

(4) Clearly mark all shore-based derricks to indicate applicable capacity ratings. Ratings are based on manufacturer's (or design) data for which derricks are certified. These ratings and any necessary precautions or warnings must be visible to the operator. Ensure that operating controls are marked or an explanation is posted at the operator's position to indicate their function.

(5) Do not exceed the rated safe working loads of each crane and derrick. Counterweights in excess of manufacturer's (or design) specifications should not be fitted. All equipment must be used in accordance with manufacturer's specifications and recommendations.

(6) Pull barges or rail cars and cargo in such a way as to prevent side loading stresses on crane booms.

(7) Use no cranes or derricks when visible defects affecting safe use exist.

(8) Ensure that every crane used to load or discharge cargo into or out of a vessel is fitted with a load indicating device or alternative device in proper working condition which will provide, as a minimum—

(a) A direct indication, in the cab, of the weight being hoisted.

Downloaded from http://www.everyspec.com

(b) An indication, in the cab, of the radius and load at the moment.

(9) Use devices which will prevent an overloaded condition from occurring.

(10) Ensure the accuracy of a load indicating device, a weight-movement device, or an overload protection device. These devices must be within a range of not less than 95 percent nor more than 110 percent of the actual true total load (5 percent overload, 10 percent underload). Such devices permit the operator to determine before making any lift that the indicating or substitute system is operating. Checks on accuracy using known load values must be performed at the time of every certification survey and at additional times as recommended by the manufacturer.

(11) Markings indicating safe working load of cranes or derricks are to be placed giving—

(a) Units of measure in pounds or in both pounds and kilograms.

(b) Capacity of the indicating system.

(c) Accuracy of the indicating system.

(d) Operating instructions and precautions.

(12) Provide the following data in the case of systems using indications other than actual weights:

(a) Capacity of the system.

(b) Accuracy of the system.

(c) Operating instructions and precautions.

(d) The means of measurements.

(13) Provide markings giving the make and model of the device installed, a description of what it does, how it is operated, and any necessary precautions regarding the system. This method should be used when the crane does not automatically stop when it reaches its load limits. All weight indications, other types of loading indications, and other required data should be readily visible to the operator.

(14) Ensure that all load indicating devices work over the full operating radius. Overall accuracy is based on actual applied load and not on full-scale (full capacity) load.

(15) Temporarily guard working areas within the swing radius of the outermost part of the body of a revolving crane by using ropes or other suitable mean during cargo operations. This action prevents personnel from being caught between the body of the crane and fixed parts of the vessel or between the load of the crane itself.

(16) Make sure that enough light is provided in the work area to carry out operations safely during the hours of darkness.

Downloaded from http://www.everyspec.com

(17) Ensure that the posted safe working loads of mobile crawler or truck-mounted cranes under the conditions of use are not exceeded.

11-7. HANDLING CARGO. The different handling methods for cargo and their procedures are discussed below.

a. **Slinging.** Personnel should—

(1) Make sure that drafts are securely slung before hoisting. Any dunnage or debris sticking out from the draft should be removed.

(2) Ensure that cargo-handling bridles (such as pallet bridles), which are to remain attached to the hoisting gear while hoisting drafts, are attached by shackles or other positive means. This step prevents them from accidentally coming loose from the cargo hook.

(3) Use double slings when hoisting long drafts such as lumber, pipe, or dunnage to prevent the top pieces from sliding off.

(4) Use double slings on unstrapped dunnage, except when it is impractical to use them because of the size of the hatch or deep tank openings.

(5) Avoid using case hooks for handling cases that are going into or out of the vessel, unless the cases are specifically made to be handled by this means.

(6) Avoid hoisting bales of cotton, wool, cork, wood pulp, gunny bags, or other similar articles into or out of the vessel by their straps. (An exception to this is if the straps are strong enough to support the weight of the bale and two hooks.)

(7) Provide loads requiring continuous manual guidance while in motion with tag lines.

(8) Avoid hoisting drafts unless the winch or crane operators can clearly see the draft itself or see the signals of any signalman associated with the operation.

b. **Building Drafts.** Personnel should build drafts so that cargo will not fall from them. Buckets and tubs should not be loaded above their rims.

c. **Tiering and Breaking Down Stowed Cargo.** When breaking down, take precautions to prevent the remaining cargo from falling. Before securing any refrigerated compartment, workers should check to make sure that no one remains inside. Also, they should make frequent checks to ensure the safety of anyone working alone in a tank or cargo compartment.

d. **Bulling Cargo.** Bulling cargo is normally done with the bull line directly from the heel block. Bulling may be done from the head of the boom when the nature of the cargo and the surface over which it is dragged are such as to avoid stalling the load. It may also be done when the winch does not have enough strength with the purchase used to overload the boom.

Downloaded from http://www.everyspec.com

(1) Falls from the cargo booms of vessels are not used to move scows, lighters, or railroad cars.

(2) Snatch blocks are used to provide a fair lead for the bull line. This is to avoid unnecessary dragging of the bull line against coamings and obstructions.

(3) Snatch blocks are not used with the point of the hook resting on the flange of a beam, but must be hung from pad eyes, straps, or beam clamps. Snatch blocks or straps are also not to be fastened to batten cleats or other insecure fittings.

(4) Beam or frame clamps are secured to the beam in a way that minimizes the possibility of their slipping, falling, or being pulled from the beam.

e. **Handling Containerized Cargo.** Personnel should be familiar with the methods of handling containerized cargo.

(1) For the purpose of this section, the term "container" means a reusable cargo container or rigid construction and rectangular configuration. It is intended to contain one or more articles of cargo or bulk commodities for shipment aboard a vessel. The cargo container is capable of using one or more other modes of transport without intermediate reloading. The term includes completely enclosed units, open top units, half or other fractional height units, units incorporating liquid or gas tanks, and any other variations serving the same basic purpose. All types must fit into the container system, and be demountable or have attached wheels. The term does not include cylinders, drums, crates, cases, cartons, packages, sacks, unitized loads, or any of the other usual forms of packaging.

(2) Personnel should mark every cargo container permanently in pounds as to—

(a) The weight of the container when empty.

(b) The maximum cargo weight that the container is intended and designed by its manufacturer to carry.

(c) The sum of these two weights.

(3) Personnel should not load aboard or discharge any container from a vessel by means of hoisting ship's cargo handling gear, shore crane, or derrick unless the following conditions have been met:

(a) An empty container must be identified as empty. This can be done either by marking or by noting the fact in cargo stowage plans. Both means of identification may be used as well.

(b) The actual gross weight of a loaded container must be plainly marked so as to be seen by the operator of the crane or other hoisting equipment, or by the signalman. The actual gross weight, the exact stowage position, and the serial number or other positive identification of the specific container must be available to all personnel involved in the operation.

Downloaded from http://www.everyspec.com

(c) Every outbound loaded container received at a marine terminal that is ready to load aboard a vessel without further consolidation or loading must be weighed to obtain the actual gross weight. Weighing is done either at the terminal or elsewhere before loading occurs.

NOTE: The following statements do not pertain to open-type vehicle-carrying containers and those built and used solely for carrying compressed gases.

(d) When container-weighing scales are located at a marine terminal, any outbound container with a load consolidated at that terminal must be weighed to obtain an actual gross weight before loading aboard a vessel.

(e) When there are no container weighing scales available, the actual gross weight may be calculated. This is provided that accurate weights of all contents are known and a list of these contents, including the empty container weight, is totaled and posted on the container. Lists of contents may refer to cartons, cases, or other means of packaging. A list need not specifically identify the commodity or commodities involved except as otherwise required by law. Inbound containers are subject to random sample weight checks at the nearest weighing facility. If errors are found in the weight of the containers, they may not be allowed to be loaded on the vessel.

(f) If loaded inbound containers from foreign ports have been weighed, they must have the calculated weight posted in the manner described above. All loaded inbound containers from foreign ports must be subject to random sample weight checks at a time up to unloading the contents of the container at the terminal or until the container is delivered unopened to the land carrier. When such checks indicate incorrect weight of the containers, some suitable means to protect the safety of the personnel involved must be taken during discharge to assure safety until the correct weights are furnished.

(g) Any scale used within the United States to weigh containers must meet the accuracy standards of the state or local public authority in which the scale is located.

(h) No container is to be hoisted if its actual gross weight exceeds the weight marked, nor may it be hoisted if it exceeds the capacity of the crane or other hoisting device intended for use. All hoisting of containers must be done safely without probable damage to the container, using the lifting fittings provided.

(i) All outbound containers must be inspected before loading for any visible defects in structural members and fittings. This inspection is to ensure that containers are safe before they are handled in loading. To the extent practical, inbound containers should be inspected before discharge. Any outbound containers found to have defects should not be loaded unless defects are first corrected. Any inbound containers found to have defects should either be discharged by special means to ensure safety, or they should be emptied before discharge.

f. **Handling Hazardous Cargo.** The safe handling methods are as follows:

(1) Determine, prior to the start of cargo handling operations, what hazardous cargoes, if any, are to be handled. Determinations may be made from cargo labels, from the dangerous cargo manifest, or from other shipping documents. Personnel must be informed of the

Downloaded from http://www.everyspec.com

general nature of the hazard, the importance of preventing damage to the cargo, and the special precautions to be taken.

(2) Carefully sling and secure drafts of hazardous cargo to prevent individual packages from falling as the draft is tipped. Any leaks or spills must be reported. When a spill occurs, all personnel should vacate the holds or compartments until the owner or shopper has determined the specific hazards and has provided necessary personal protective equipment and clothing. Ventilation and fire protective equipment needed to avoid or protect against the hazard should also be provided. The owner or shipper should instruct personnel regarding the safe method of cleaning up and disposing of a spill or handling and disposing of the leaking containers. Cleanup and disposal is to be carried out under the personal supervision of a representative of the employer aboard the vessel.

11-8. GENERAL WORKING CONDITIONS. The safety rules for the different types of conditions are discussed below.

a. **Housekeeping.** Personnel should apply the following safety rules:

(1) Keep weather deck walking and working areas reasonably clear of lines, bridles, dunnage, and all other loose tripping or stumbling hazards. Gear or equipment not in use from immediate work areas should be removed and equipment placed so as not to present a hazard.

(2) Eliminate slippery conditions as they occur. The work area should be kept clean and clear of loose paper, dunnage, and debris.

(3) Do not use dunnage racked against sweat battens when the levels of these racks are above the safe reach of personnel.

(4) Stow dunnage, hatch beams, tarpaulins, or gear not in use no closer than 3 feet to the port and starboard side of the weather deck hatch coaming. When circumstances make this impossible, personnel should try to stay as close to the 3 feet limitation as they can.

b. **Ventilation.** Personnel should apply the following safety rules:

(1) Make periodic air tests to check the amount of carbon monoxide in the air when internal combustion engines are used inside a hold, an intermediate deck, or any other compartment. The frequency of performing these tests depends on the type of location of the operation and the existing conditions. Tests should be made where personnel are working. They should be made by persons competent in the use of test equipment and procedures. Where operations are located in a deep tank or refrigerated compartment, the first test should be made within 30 minutes of the time the engine starts.

(2) Ensure that the carbon monoxide content of the air is maintained at less than 50 parts per million (.005 percent). Vacate any compartment in which the carbon monoxide concentration exceeds 50 parts per million. Return only after the carbon monoxide content has been brought below 50 parts per million.

Downloaded from http://www.everyspec.com

(3) Take other means to make sure that there is good ventilation when neither natural ventilation nor the vessel's ventilating system is able to keep the carbon monoxide concentration within allowable limits.

(4) Guard the intakes of portable blowers and any exposed belt drives by the use of screens. The frames of portable blowers should be grounded at the source of the current. Grounding may be done either through a third wire in the cable containing the circuit conductors or through a separate wire. When the vessel is the source of the current, the ground should be made to the structure of the vessel. Electric cords used must be free of visible defects. Personnel should not permit the use of shore electrical circuits unless they have been checked.

(5) Keep a record of the date, time, location, and results of all carbon monoxide level tests performed for at least 30 days after the work is completed.

(6) Check the air to determine if it is safe to work in places where hazardous cargoes are stowed, where dry ice has been used as a refrigerant, where fumigation has taken place, or where there is a possibility of oxygen deficiency.

(7) Realize that there are dangerous gaseous contaminants not dangerous when breathed for a short period of time. However, these gases may produce discomfort and injury after a prolonged single exposure or repeated short exposures.

(8) Do not to enter or remain in an unsafe work area until the air is safe to breathe or until suitable respiratory equipment is provided. If the air contains less than 16.5 percent oxygen, it would endanger the life of a person breathing it for even a short period of time.

c. **Other Hazardous Conditions.** When personnel are exposed to heavy concentrations of dusts, supervisors are responsible for providing them with suitable respiratory protective equipment. Cargo-handling operations should not be carried out when chipping or scaling operations create noise which interferes with communication.

d. **Sanitation and Drinking Water.** Cargo handling operations should not take place in the immediate vicinity of uncovered garbage, nor in the way of overboard discharges from sanitary lines unprotected by a baffle or splashboards. Drinking water should be kept in clean, covered containers.

e. **First Aid and Life Saving Equipment.**

(1) Ensure that a first aid kit is available aboard the vessel unless a first aid room is close at hand and a qualified attendant is prepared to render first aid to personnel. The contents of the first aid kit should be checked prior to each job to make sure that all expended items have been replaced.

(2) Each vessel being worked must have one Stokes basket stretcher, or its equivalent, permanently equipped with bridles for attaching to the hoisting gear. This is not necessary if there are more than two stretchers on each pier. Stretchers should be kept close to the vessels.

(3) In the vicinity of each vessel being worked, there must be at least one US Coast Guard-approved 30-inch life ring (Figure 11-9, page 11-26), with not less than 90 feet of

Downloaded from http://www.everyspec.com

line attached. Also, there should be at least one portable or permanent ladder which will reach from the top of the apron to the surface of the water. If this equipment is not available at the pier, it must be furnished during the time personnel are working the vessel. When working a barge, scow, raft, lighter, log boom, or car float alongside a ship, a US Coast Guard-approved 30-inch life ring with not less than 90 feet of line must be provided. The life ring should be located either on the floating unit itself or aboard the ship in the immediate vicinity of each floating unit being worked.

(4) When personnel are working on log booms or cribs, lifelines are furnished and hung over the side to the water's edge.

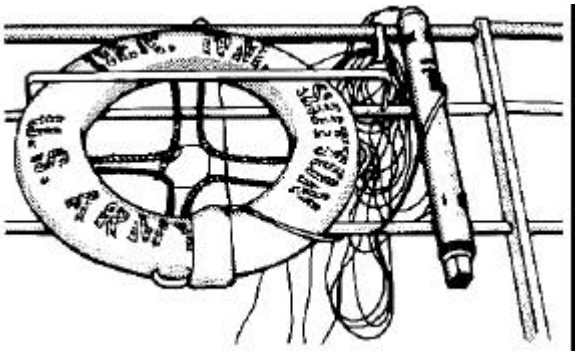

Figure 11-9. 30-inch life ring

f. **Personal Protective Equipment.** Ensure that items of protective equipment are available and used in situations requiring such equipment.

(1) ***Eye protection.*** When an eye hazard from flying particles or heavy dust exists, exposed personnel should wear appropriate, authorized eye protection equipment.

(2) ***Protective clothing.*** Personnel who are handling cargo which, due to ruptured, leaking, or inadequate containers could cause burns or skin irritation, must wear suitable protective clothing. Protective clothing is required in those situations that are otherwise injurious to health. Previously worn protective clothing should be cleaned and disinfected before it is reissued.

(3) ***Foot protection.*** All personnel should wear safety shoes.

(4) ***Head protection.*** Personnel must wear appropriate, authorized protective headgear when working in and around cargo operations. Protective headgear that has been previously worn should be cleaned and disinfected before it is reissued.

(5) ***Ear protection.*** Personnel should wear proper ear protection devices while working in high noise areas.

Downloaded from http://www.everyspec.com

CHAPTER 12

STUFFING THE CONTAINER

12-1. INTRODUCTION. Proper container stuffing meets two main objectives: using all, or as much as possible, of the container's cube capacity; and protecting the cargo from loss or damage during transit.

12-2. GENERAL PLANNING CONSIDERATIONS. Cargo handlers must plan each container load for ease of unloading or "stripping" at destination. When cargo for more than one consignee has been consolidated, the cargo for each stop should be physically separated by partitions, dividers, paper, or plastic sheets. Cargo to be stripped first should be stuffed into the container last.

a. To further facilitate stripping, cargo handlers will—

- Place forklift openings in pallet or skids facing the door of the containers.
- Provide a lift clearance at the top (minimum of 4 inches) for items to be handled by the forklift.
- Avoid wedging or jamming cargo into containers.

b. Place heavy items and wet commodities on the bottom with light and dry commodities on top. Do not stuff dangerous cargo with incompatible items already in a container. Make sure the weight distribution is even throughout the container so that the container is properly balanced. Stow cargo tightly in the container so shifting will not occur and cause heavy items to be thrown through the container walls. If the cargo does not fill the container, block and brace the cargo. Stuff all containers as though they were going to be stowed on deck. This will ensure that containers are watertight and capable of standing greater stress and strain than if stowed below deck.

12-3. CARDBOARD CARTONS. Cardboard cartons are probably the easiest type of cargo to stuff in containers, especially when the cartons are of equal size. Because of their routine nature, however, basic stuffing techniques are often overlooked. Cargo handlers should preplan the load and establish the stuffing pattern. The weight should be evenly distributed throughout the container. Cargo handlers should ensure that, if possible, the load is tight and square from front to back and from wall to wall. The cases should be either turned or staggered when stuffed to produce lacing effect, which gives the load more stability and reduces shifting. Figure 12-1, page 12-2 shows the bonded block stuffing method, which is highly recommended when stuffing loose cartons.

12-4. PALLETIZED CARGO. Cartons and cases that are unitized are normally the best cargo for stuffing, unstuffing, stabilizing in transit, and warehousing. As with a manually-stacked load, the cases should be interlocked in each unit to reduce shifting. Unitized cargo should be secured with banding or shrink wrap. Cargo handlers will use uniform pallet-load heights to obtain maximum use of container cube when palletized loads are placed in containers (Figure 12-2, page 12-2). Better cargo cube capacity can be obtained by using a pallet-load height of 43 inches instead of the 54-inch pallet-load height used in break-bulk shipments. The pallet-load height of 54

Downloaded from http://www.everyspec.com

inches is too high for double-stacking in a container and results in the loss of valuable cargo cube capacity.

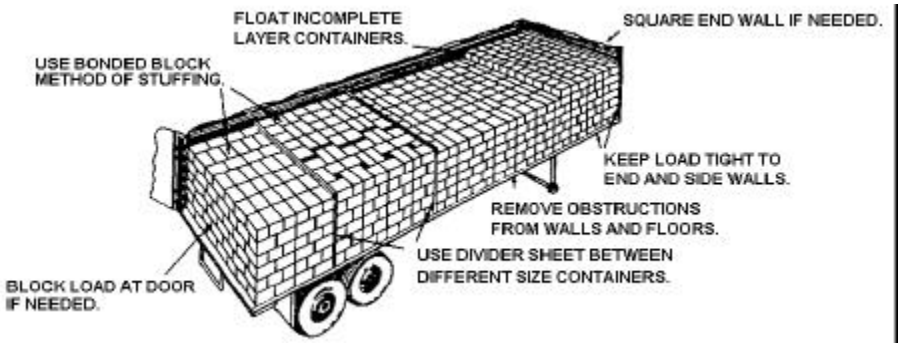

Figure 12-1. Bonded block method of stuffing cardboard cartons

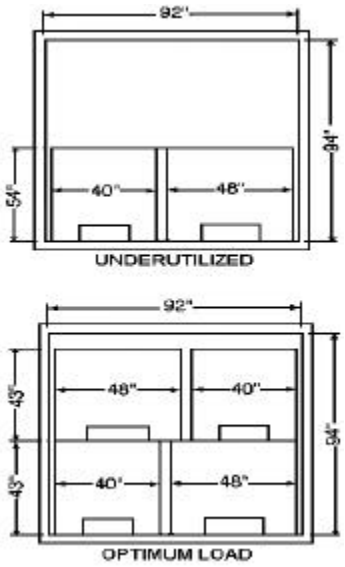

Figure 12-2. Cube utilization

12-5. BAGGED, SACKED, AND BALED CARGO. The stuffing methods are as follows:

a. Cargo handlers ensure that cargo consisting of bags, sacks, and bales is laced on dunnage--either racks, pallets, or packing material. The cargo should be stuffed in cross-tiers as shown in Figure 12-3. The cross-tier method provides the most stability. It is customarily used for less-than-full container loads of bagged cargo, and for a full load at the rear, to minimize the possibility of cargo shifting.

b. As with most other types of cargo, container loads of bagged material should be braced across the door to prevent the bags from falling out when the container is opened. Cargo handlers should also—

Downloaded from http://www.everyspec.com

- Use sufficient dunnage layers on the container deck to provide a sump area for condensate drainage.
- Separate bags, sacks, or bales from other cargo by using partitions or auxiliary decks.
- When stuffing bales, provide dividers between rows and tiers to prevent chafing and friction between metal bands or strapping.
- Flatten Bags.

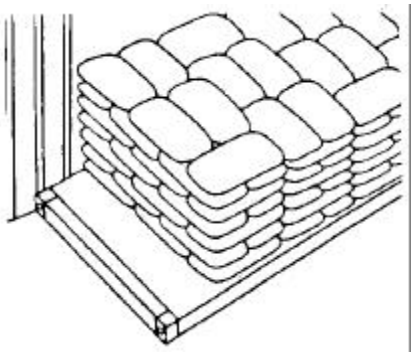

Figure 12-3. Cross-tier stuffing

12-6. DRUMS. The stuffing methods are as follows:

a. Place drums tightly against each other to avoid shifting (see Figure 12-4). Drums and barrels containing petroleum products are not shipped in the same container with general cargo.

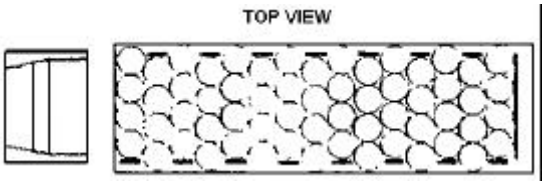

Figure 12-4. Drums stuffed tightly to prevent shifting

b. If there is any unused floor space, brace the load with chocks to prevent the drums from tipping or shifting. Drums should be placed upright with the bungs on top, packed tightly, and, preferably, palletized. Personnel will use flatrack containers, if available, for high-density loads since unstuffing is facilitated with this type of container. Consistent with the weight limitations of the container and individual state highway restrictions, it may be possible to double-tier palletized drums depending on the commodity density. These drums must, however, be properly stacked and tied down.

c. When double-stacked drums are not unitized, place dunnage between tiers. This dunnage increases the amount of weight-bearing surface and reduces sliding. The drums on the second tier must also be packed tightly.

d. Handle pails and fiberboard drums in the same manner as regular drums. However, since most pails and fiberboard drums have ridged, interlocking chines, do not use dunnage between tiers so that the top and bottom rims can interlock.

e. When checking fiberboard drums, personnel should be aware that banding can sometimes cut the drums. It is recommended that fiberboard drums be chocked by use of a

Downloaded from http://www.everyspec.com

bulkhead (Figure 12-5). On double-stacked fiberboard drums, personnel may use a stand chock. The bottom tier should be tight to give support to the stand chock.

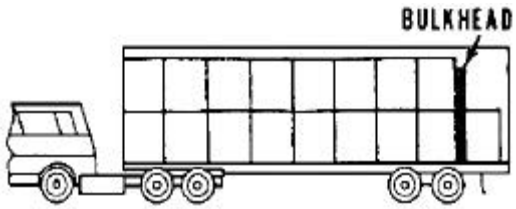

Figure 12-5. Bulkhead constructed to support load

12-7. WOODEN BOXES AND CRATES. When stuffing a container with wooden boxes and crates, place the heavy items on the container floor with the pallet access openings facing the container door. If the crates are of uniform size and weight, they should be stacked directly one on top of the other. Personnel should never place a heavy box or crate so that it rests on top and inside the four corners of the box beneath it. Dense crate loads may require dunnage over the lower level of crates to prevent damage.

a. Stuff small, unpalletized boxes and crates in much the same manner as cartons and place them on their sides or ends to maximize space, provided vendor instructions do not prohibit it.

b. As a general rule, place boxes and crates containing liquids that may leak on the bottom of the load. As with other types of cargo, the load should be braced to prevent boxes and crates from falling out when the container is opened at destination.

c. Figure 12-6 shows stuffing arrangements of various sizes of boxes and crates.

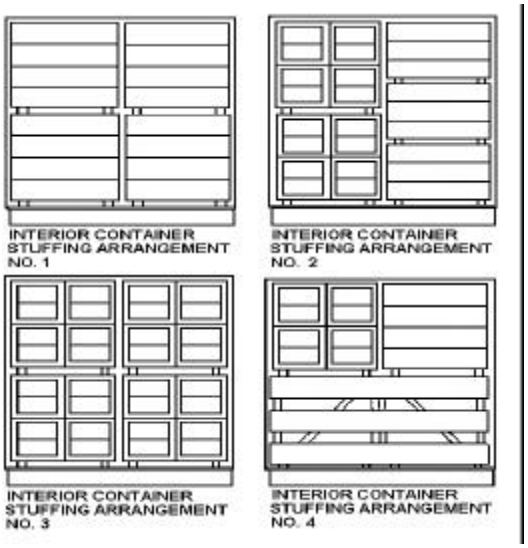

Figure 12-6. Methods for stuffing various sizes of wooden boxes and crates (rear view)

Downloaded from http://www.everyspec.com

12-8. MACHINERY AND HEAVY-END ITEMS. Loads must be carefully preplanned when machinery and heavy-end items are to be stuffed into containers. In addition to equipment that may be irregular in shape, high-density components may reach the weight capacity of the container or the highway limitations imposed by individual states and countries before achieving the desired cube capacity of the container.

a. Extreme weight will not in itself hold the cargo in place. Ensure that heavy cargo is securely braced and blocked on all sides to prevent any lateral or lengthwise motion, since its concentrated weight will cause major damage if the load shifts. Deck cleats and chocking should prevent lateral and fore-and-aft movement. The use of tie-downs and metal strapping should prevent vertical movement.

b. All shoring and bracing must bear on a structural member of the container and not on the panel sides of the container alone.

c. Heavy cargo, though requiring no extra crating or boxing, should be placed on cradles or skids so the extreme weight is further distributed over a larger area (see Figure 12-7).

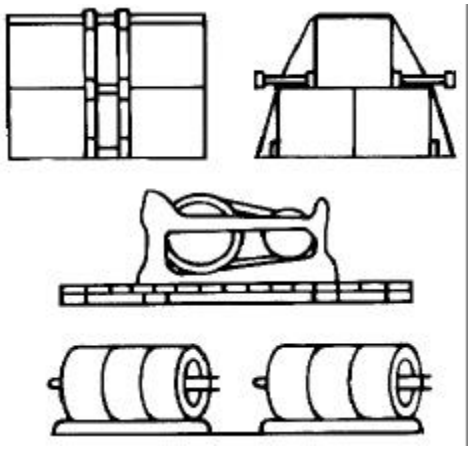

Figure 12-7. Distribution of heavy loads in containers

d. In some instances, extremely dense items may need to be bolted to the container floors. Personnel should not do this without approval of the carrier.

12-9. VEHICLES. The exact method for securing vehicles in containers depends on the type and size of the vehicle being shipped; however, the following general rules apply:

- Load vehicles into the container facing out to allow for quick loading.
- Place vehicles in gear with the hand brakes set.
- Disconnect battery and tape the cable terminals.
- Drain the fuel level to no more than 1/4 tank.
- Remove or protect breakable parts such as exterior mirrors and antennas.
- Secure vehicles to the floor to include chocking the wheels on all four sides so that lateral or lengthwise movement is possible.

Downloaded from http://www.everyspec.com

Stack small vehicles in a standard container to obtain maximum cube use.

12-10. MIXED COMMODITIES. To achieve maximum cube use, more than one commodity will often stuff into the same container.

a. Along with the general stuffing techniques listed throughout this section, the following guidelines should be followed when stuffing mixed commodities:

- Never stuff a commodity giving off an odor with a commodity that would be affected by an odor. Certain cargo can be contaminated by contact with oil, dust, or vapors.
- When stuffing commodities with different packaging (cartons with crates), be sure to use dunnage between the different kinds to separate them and prevent damage (Figure 12-8).
- If wet and dry cargoes are stuffed in the same containers, use dunnage to separate the commodities.
- Container doors are not to be used to secure loads. You can use bullboards wedged in container doorposts and plywood sheets or pallets to prevent mixed or boxed cargo from contacting the container door.
- Do not stow hazardous materials of different classes in the same container if any segregation requirements are shown in the IMDG code for the different classes involved.

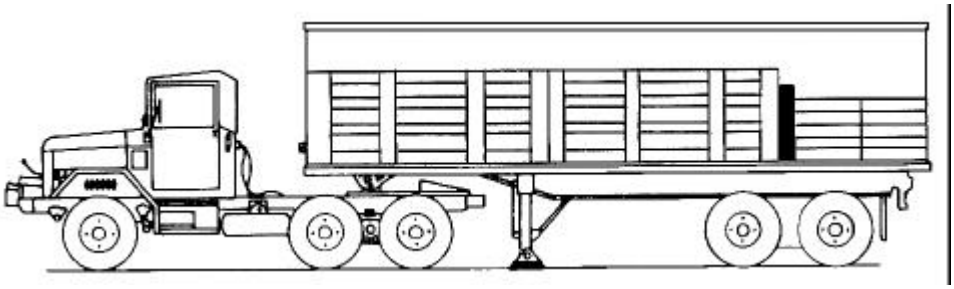

Figure 12-8. Dunnage separating mixed commodities

b. Sound judgment is the most important basis for determining when commodities can be mixed and what stuffing method is the best to be used to ensure the arrival of cargo at its destination without any damage.

12-11. PERISHABLES. The refrigerator container should be inspected for cleanliness and should be precooled before loading. Some containers have drain holes in the bottom for cleaning purposes. Since these holes permit the entry of outside air and affect the temperature, they must be plugged before cargo is loaded in the container. The cargo should then be loaded as quickly as possible into the container, normally without lathing or dunnage placed between rows or layers of cargo. The cargo should not be packed tightly to the interior roof of the containers or hard against the doors, because sufficient air space must be left to provide proper air circulation within the container (Figure 12-9). Chapter 8 has more information on stowing refrigerated cargo.

a. Frozen foods do not generate heat. Stowing boxes of frozen commodities tightly will prevent heat entry and surround the items with a blanket of cold air (Figure 12-10).

Downloaded from http://www.everyspec.com

b. When loading is completed, the clerk closes the doors and affixes the seal. On the record chart, the clerk writes the date and time of loading, temperature setting, and the name and voyage number of the vessel on which the container will be loaded.

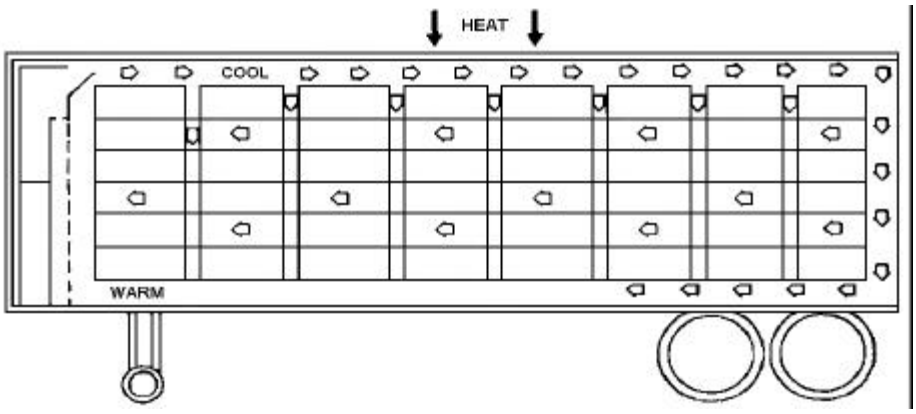

Figure 12-9. Stuffing perishable commodities

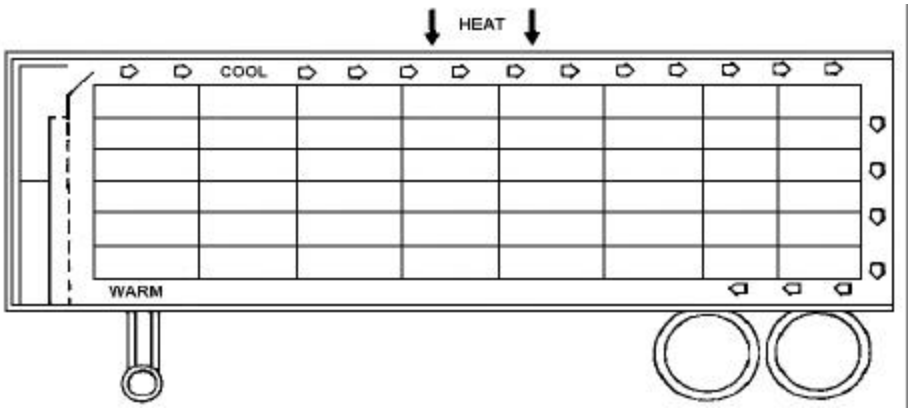

Figure 12-10. Frozen food stowage

Downloaded from http://www.everyspec.com

CHAPTER 13

CONTAINER HANDLING AND LABELING

13-1. INTRODUCTION. To gain full advantage of containership operations, the container must be moved efficiently, speedily, and safely through the terminal. This is accomplished by using special handling equipment and proper labeling. The type of handling and lifting equipment varies from terminal to terminal. The container storage method used, the modes serving the terminal, and the overall layout of the terminal storage area all determine the type of equipment used. The design of a new terminal is often determined by the type of handling equipment to be used as well. (The handling and lifting equipment described in this chapter was selected as typical of the many models available. However, its selection does not indicate Army endorsement.)

13-2. STRADDLE CRANES. Straddle cranes are self-propelled gantry cranes which move on rubber tires or rails. They may straddle from one to six railroad tracks while loading and unloading containers and piggyback trailers. Both the tire and rail-mounted types are highly versatile. They are capable of lifting up to 50 tons, moving through narrow aisles, and spotting containers in specific locations throughout the storage yard. Many have the capacity for stacking containers two and three high. The lifting device used on the straddle crane is usually a universal lifting spreader that fits into special lifting slots at the top of the container. The spreader may fit completely underneath the container. The two straddle cranes shown in Figure 13-1 are mounted on rubber tires, although some straddle cranes are mounted on rails. Both cranes are shown in a piggyback operation. Each has a skewing trolley which permits them to move in a straight line or at an angle.

Figure 13-1. Straddle cranes in a piggyback operation

13-3. STRADDLE TRUCKS. Straddle trucks are similar to straddle cranes. However, they are smaller than straddle cranes and are limited to straddling one container. These trucks pick up one container from a stack in the storage area and move it alongside the vessel. The straddle truck has more speed and maneuverability than the straddle crane. It may either lift the container from the top with the universal spreader or from the bottom with lifting arms.

13-4. DOCKSIDE CONTAINER CRANES. Dockside cranes for handling containers are designed for quick loading and unloading. This greatly reduces the time a containership must spend in port. By using these cranes, ship turnaround time has been reduced from 110 to 40 hours in some instances. There are restrictive limitations peculiar to each terminal. Therefore, the design of a particular dockside crane depends on the requirements of the terminal served. Figure 13-2, page 13-2 shows a typical dockside 40-ton capacity container crane, capable of handling containers at the rate of one per minute.

Downloaded from http://www.everyspec.com

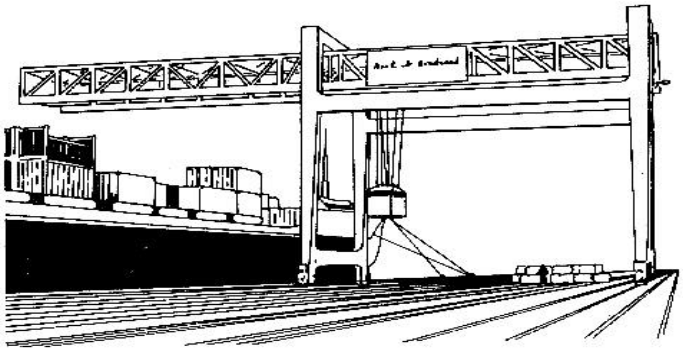

Figure 13-2. Common dockside container crane

13-5. SHIPBOARD CONTAINER CRANES. When ports of discharge do not have pierside cranes of sufficient size and design to discharge non-self-sustaining containerships, a shipboard system must be used. This system is used by commercial contractors on shuttle ships to unload cargo in ports not equipped with pierside container cranes. One disadvantage in using a shipboard crane system is that it limits the size of the deck load the vessel can carry. The crane must be able to travel the length of the load without hitting the container tops.

a. Figure 13-3A shows a crane with a hinged girder extension that has a 17 LTON capacity and a 10-foot load outreach. The offshore boom can be raised to help compensate for the list of the vessel in port. The booms fold down for compact stowage when not in use. Cranes of this type are used in the LASH system.

b. Another type of crane features a short wheelbase, fold-back girders and a rotating trolley (Figure 13-3B). Unlike the crane shown in Figure 13-3A, this crane loads and unloads off the ship's stern. This crane can handle fully loaded lighters on and off the ship at an average rate of one every 15 minutes. The crane weighs 475 tons and is operated by one man. It can handle fully loaded lighters in seas as high as 8 feet.

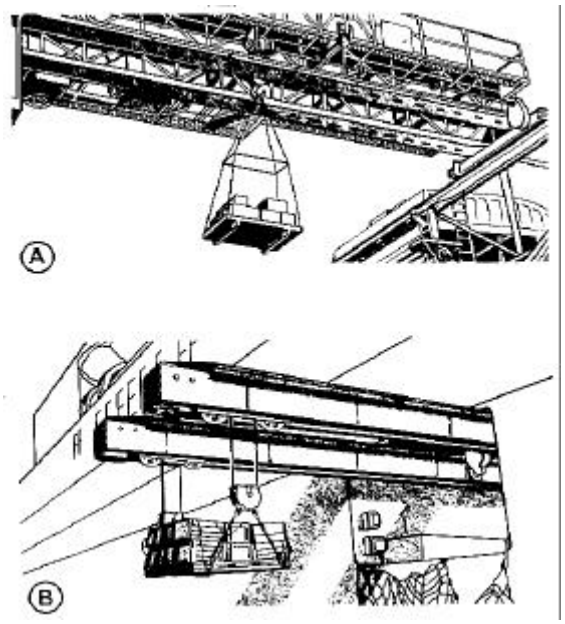

Figure 13-3. Shipboard container cranes

13-6. LABELING AND HANDLING OF CONTAINERS. Cargo handles must know the actual weight of each loaded container (payload plus tare weight). National and international

Downloaded from http://www.everyspec.com

regulations covering packaging, labeling compatibility, and manifesting of hazardous goods must also be followed when loading and documenting containerized shipments. Responsible personnel will apply one label of the type prescribed by the United Nations for individual packages within the container to the outside rear of the container. The shipment date must be clearly shown.

a. Responsible personnel will ensure the concentration of weight if any 10 linear feet does not exceed 25,000 pounds or the maximum allowable load, whichever is less. The load must be supported on beams of sufficient strength and length to meet these requirements.

b. The address markings tell where the shipment is coming from and where it is going. Cargo address markings are required on all items being shipped overseas or in CONUS. An exception to this is when the shipment consists of a full truckload shipped by a consignor to a single CONUS consignee. The method of applying the address depends on the type of container and the transportation priority of the shipment. The two methods used are labels and stencils.

c. Labels are preprinted stickers that are applied to the package to be shipped. Shipping labels are used on boxes, crates, drums, and other containers when practical.

d. Stencils are used when space or material surface permits, and when the shipment has a low transportation priority that does not require an expedited handling label. Stencils are locally produced address markings that are normally made by punching out alphanumeric characters on stencil paper using a stencil-cutting machine. The stencil is placed against the crate and painted over. The stencil is then removed, leaving clear block letters on the crate.

e. Regardless of whether a stencil or label is used for the shipment address marking, the format and the information contained in the address markings are basically the same. Figure 13-4 shows a completed DD Form 1387.

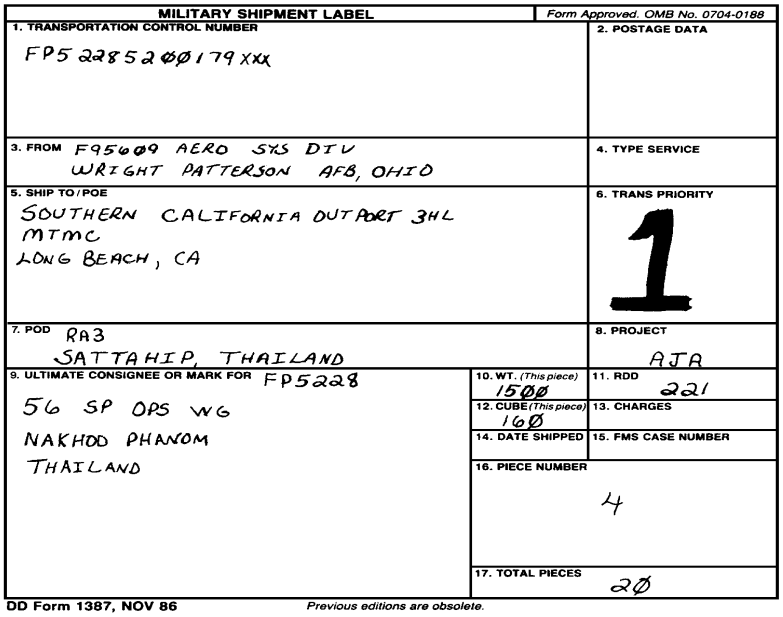

MILITARY SHIPMENT LABEL — Form Approved. OMB No. 0704-0188

1. TRANSPORTATION CONTROL NUMBER: FP5 228520Ø179XXX

2. POSTAGE DATA:

3. FROM: F95609 AERO SYS DIV
WRIGHT PATTERSON AFB, OHIO

4. TYPE SERVICE:

5. SHIP TO/POE: SOUTHERN CALIFORNIA OUTPORT 3HL
MTMC
LONG BEACH, CA

6. TRANS PRIORITY: 1

7. POD: RA3
SATTAHIP, THAILAND

8. PROJECT: AJA

9. ULTIMATE CONSIGNEE OR MARK FOR: FP5228
56 SP OPS WG
NAKHOD PHANOM
THAILAND

10. WT. (This piece): 15ØØ

11. RDD: 221

12. CUBE (This piece): 16Ø

13. CHARGES:

14. DATE SHIPPED:

15. FMS CASE NUMBER:

16. PIECE NUMBER: 4

17. TOTAL PIECES: 2Ø

DD Form 1387, NOV 86 — Previous editions are obsolete.

Figure 13-4. Completed DD Form 1387

Downloaded from http://www.everyspec.com

13-7. SPECIAL MARKINGS. In addition to address markings, many items transported with special markings give personnel who are handling, moving, or storing the freight various precautionary warnings or special handling instructions. Some special markings are required by CFRs 46 and 49, International Maritime Dangerous Goods Codes, and MIL-STD-129. Other markings are added at the discretion of the shipper.

a. **Hazardous Material.** So that personnel can easily identify hazardous cargo, each of the 14 hazardous commodity classifications has a distinctly colored label. Cargo that requires a hazardous material label is referred to as "label cargo." The labels are overstamped or overprinted with the appropriate United Nations class number located in the bottom corner of the label as required on MILSTAMP documentation. Refer to Appendix B for a complete description of all hazardous cargo labels.

b. **Precautionary and Special Handling Instructions.** In addition to the colored hazardous cargo labels, various other precautionary warnings and handling instructions are put on the outside of containers and items of equipment when special handling is required. For some types of cargo and under certain shipping conditions, these warning and handling instructions are required by government regulatory agencies, federal laws, or military regulations. In other cases, the markings are applied only for the purpose of protecting the fragile or sensitive contents of a container from damage that could be caused by improper handling or storage. During cargo transfer operations, cargo checkers should watch for these markings and bring them to the attention of the cargo handlers when an item is being improperly handled or stored.

(1) ***Fragile.*** Containers packed with delicate or fragile articles are marked FRAGILE in at least three locations. Red-bordered fragile labels may be used, or the word FRAGILE, the fracture symbol, and a red border may be stenciled or printed on the container (Figure 13-5). When containers are marked with precautionary markings (GLASS--DO NOT DROP OR THROW, GLASS--HANDLE WITH CARE), the FRAGILE marking is not required.

Figure 13-5. DA Label 5, fragile symbol

(2) ***Arrows.*** Many items moving in the DTRS must be shipped, handled, and stored in an upright position in order to reduce the possibility of leakage or damage. The shipping containers for these types of items are marked on at east two sides with an arrow and the word UP to indicate the top surface of the container.

(3) ***Center of Balance.*** Cargo-handling operations involving the lifting of vehicles and other equipment are extremely dangerous when performed in an improper manner. Since the physical characteristics of different types of equipment vary, shippers usually provide instructions on where to attach lifting slings on unboxed equipment and indicate the location of the center of balance on large or unbalanced containers. The lifting points on unboxed vehicles are

Downloaded from http://www.everyspec.com

marked with a 1-inch-wide line on both sides of the container, and the words CENTER OF BALANCE are stenciled or printed above or alongside the line (Figure 13-6).

(4) ***Use No Hooks.*** Hand-held bag hooks are sometimes used by cargo handlers to move cloth-wrapped bundles or bales. Since the use of these hooks on items such as burlap-wrapped tarpaulins or clothing will result in damage, the legend USE NO HOOKS and a hook symbol with an X over the symbol (Figure 13-7) are stenciled on two sides of the bundle when use of hooks is prohibited.

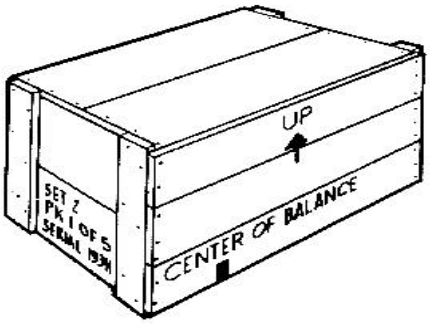

Figure 13-6. Center of balance indicator

Figure 13-7. Use no hooks markings

NOTE: MIL-STD-129 emphasizes that special handling markings are to be used only on those items actually requiring such handling.

c. **Commodity Category Markings.** In addition to other nomenclature and identification markings, MIL-STD-129 provides for color marking symbols for different commodities of supplies and equipment being shipped overseas. With the exception of medical supplies, these color marking symbols are used only when specified by a military department. This additional marking requirement usually occurs only when a large volume of supplies and equipment is being shipped in support of combat operations. The application of color marking symbols for medical supplies being shipped to overseas units is required at all times. When the commodity color marking symbols are used, a cargo checker who knows the different colored symbols can determine the type of cargo in a container at a glance. This system is extremely helpful when supplies are being sorted by commodities or when a priority requirement exists for a specific item.

(1) ***Category symbols ant label colors.*** When personnel are required to color-code cargo, they use special colored labels with black symbols (Table 13-1, page 13-6). The labels measure 3 by 3 inches to 10 by 12 inches depending upon the size of the container.

(2) ***Marking requirements.*** Except for MILVANs and SEAVANs, four-color marking symbol labels are applied to each rectangular shipping container. Responsible personnel will place one label on each side, one on an end, and one on top (Figure 13-8, page 13-6). When a container, palletized load, or transporter consists of two or more commodities, the labels are put only on the interior containers. Responsible personnel will apply labels to MILVANs or SEAVANs under any condition.

Downloaded from http://www.everyspec.com

Table 13-1. Categories and symbol labels

CATEGORY	SYMBOL LABEL	BACKGROUND
TANK-AUTOMOTIVE		YELLOW
ELECTRONICS		ORANGE
CONSTRUCTION AND MHE		RED
RAIL AND MARINE		RED
WEAPONS		YELLOW
GENERAL SUPPLIES	G S	GREEN
CLOTHING AND TEXTILES		GREEN
PUB.-PRINTED MATTER-STATIONERY		WHITE
AIRCRAFT COMPONENTS/ AVIONICS		BLUE
MISSILE		YELLOW
MEDICAL		MAROON
POL STORAGE AND DISPENSING EQUIP	POL	GREEN
POL		WHITE OR YELLOW

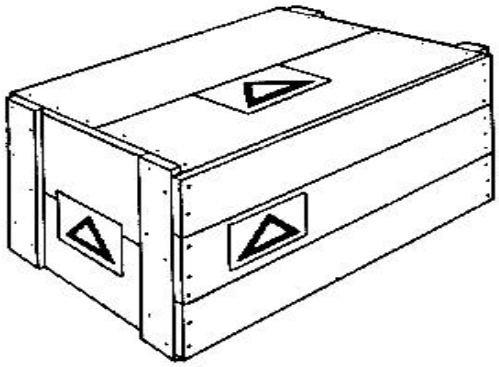

Figure 13-8. Proper label placement

(3) ***Exceptions.*** The color marking symbol labels are not used on the following categories of cargo:

(a) Major unpacked items that are easily recognizable, such as vehicles, artillery pieces, or boats.

Downloaded from http://www.everyspec.com

(b) Explosives and other dangerous articles that are marked with the distinctive color labels. Federal statutes and military regulations forbid the use of additional colored labels.

(c) Perishable and nonperishable subsistence items (except items for resale) which are always identified (Figure 13-9) by stenciling or printing a solid black crescent on the shipping container.

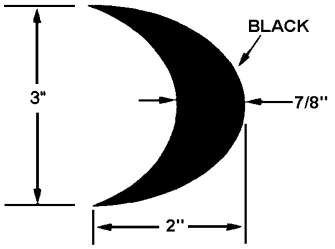

Figure 13-9. Subsistence items marking

13-8. SECURING OF CONTAINERS. After each container has been stuffed, responsible personnel will ensure that—

- The doors have been securely closed and are watertight.
- A seal has been placed on the container.
- The seal number has been recorded, and the shipping documents and the proper markings have been placed on the container in accordance with MILSTAMP.

a. The modern, fully cellularized containership requires no container lashing under deck. The cell structure stops the container from moving. An exception to this may occur in some vessels where two 20-foot containers are stowed, in tandem, in a 40-foot cell. In some cases it may be necessary to install stacking cones at each level to lock the containers in position. The cell guides for the 40-foot container will hold one end of the 20-foot container, but where they butt against each other in the middle there may not be any restraining structure. Stacking cones or bridge fittings must be used.

b. Most of the new ships employ a locking-type stacking cone for on-deck stowage. The cone secures the bottom container to the deck or hatch cover, or locks each container above to the one below. With this system, it is normally permissible to stow containers two-high on deck without installing deck lashings. When containers are stowed three-high, additional cross lashings are installed from the bottom corners of the second tier of containers with no lashings on the third tier. When stowed four-high, additional cross lashings are installed on the fourth tier. Figure 13-10, page 13-8 illustrates two types of container lashing equipment. The tensioners/wire assemblies use a wire lashing fitted with multiple washers which set the proper length for tensioning. The rigid rods are tensioned with a turnbuckle. The turnbuckles have removable tensioning wheels, as shown. Many vessels still use stacking cones between containers. These cones will keep the containers from shifting from side to side but are unable to restrain any lifting or tipping movement. As a result, it is necessary to lash these containers to the deck even when stowed one-high. Figure 13-11, page 13-8 shows locking-type and single and double stacker-type cones.

Downloaded from http://www.everyspec.com

c. Lashing systems are constructed primarily of chain or steel rod; the latter has become more prevalent. The steel rod system is a rigid lashing system with no give once it is set tight with a turnbuckle. The rigidity permits installation by a person standing at deck level; there is no need to climb a ladder to insert the securement hook or plug fittings, as is the case with wire lashings. Chains are also used in container lashings, either singly or in conjunction with wire lashings. Tensioning devices include turnbuckles, wire tensioners, and chain tensioners. Figure 13-10 shows the rod lashing system for containers. Bridge fittings are still used on some vessels, but their use has gradually been eliminated. Bridge fittings are used on the top of the top tier of containers to secure two adjacent containers to each other. Regardless of the lashing system used, it is normally an integrated system designed for use on a particular vessel and must be used in the manner prescribed.

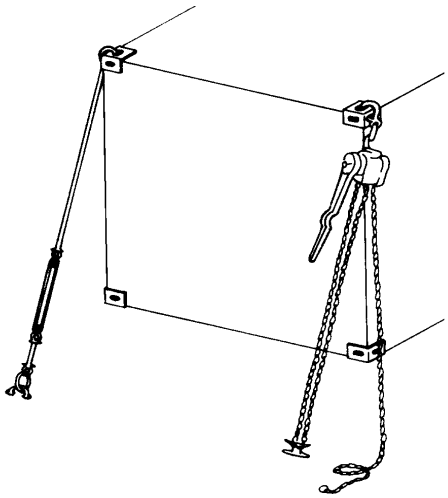

Figure 13-11. Stacker cones lashing equipment

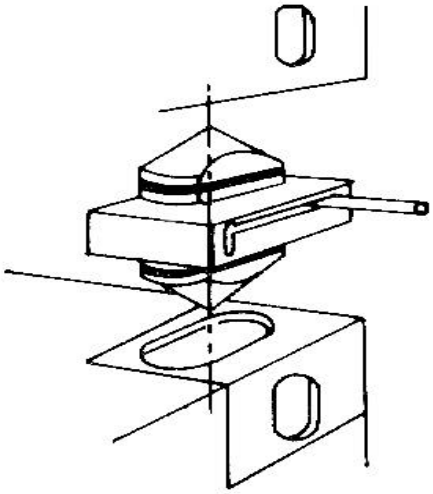

Figure 13-10. Two types of container

d. Unless other special arrangements are made, twist locks or similar devices are used to secure all four bottom corner fittings. Figure 13-12 shows a container secured to a truck and an example of a locking device.

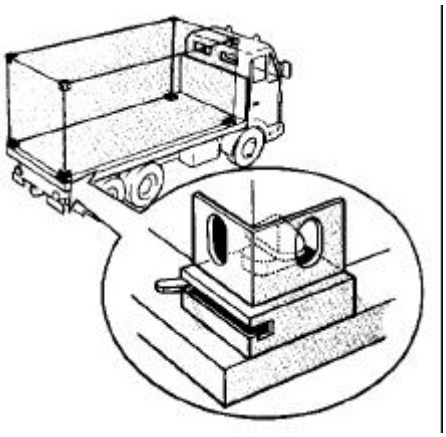

Figure 13-12. Container secured with locking device on truck

Downloaded from http://www.everyspec.com

e. Sometimes lashings are used as a substitute for or in addition to twist locks on the decks of LCUs, LCMs, or LARCs. The rolling of these vessels can exert severe strains on containers. When lashing is used, it is done from all top corner fittings of the containers if they are sitting on top of dunnage on deck, or from all bottom corner fittings if they are sitting on MILVAN chassis. In either case, the lashings may or may not be crisscrossed, depending on the deck fittings or space available. If not crisscrossed, the lashing should extend off the sides of the chassis container. These techniques provide good protection against upward, side-to-side, forward, and rear movement (Figure 13-13).

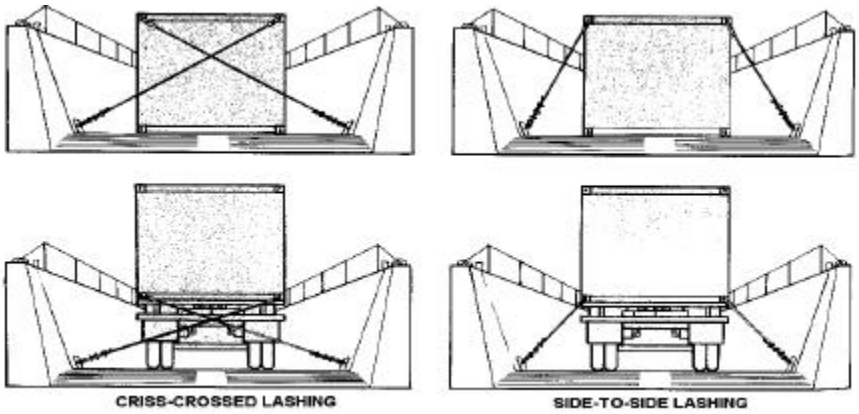

Figure 13-13. Container lashing methods

f. The proper securement of any cargo on a vessel is the responsibility of the chief mate and the master and must be performed to their satisfaction. However, the securement of containers has become an established procedure on most containerships. The stress imposed on the containers, securement points, and fittings has been calculated by engineers to ensure that all components will withstand the loads imposed upon them under almost every sea and weather condition encountered by the vessel. As a result, the ship's officers need only to inspect the lashings to make certain they have been installed properly.

g. Container stowage follows a basic pattern. Except in the case of refrigerated containers, the doors of containers stowed on deck should face aft. This protects the doors from direct exposure to the weather and the sea. While the direction of the door may be immaterial below deck, it is best to follow a set pattern to prevent possible mistakes when on-deck loading commences. Reefer containers usually must be stowed with the reefer unit facing aft and the doors forward, since the electrical power unit on the reefer container is highly susceptible to water damage and short circuiting. The electrical outlets on the vessel are usually located aft of the hatches to permit easy access for plugging in the containers.

13-9. LIFTING OF CONTAINERS. The lifting methods are as follows:

Downloaded from http://www.everyspec.com

a. **Top Lift.** Top corner fittings are the recommended lifting points for all types of containers which have them. The equipment should, therefore, be designed for lifting from, and be properly attached to, these fittings.

(1) Operators will use only the following types of equipment in lifting containers 20 feet or more in length:

- Vertical lift, using twist locks.
- Rectangular spreader with pendant hooks or shackles, which apply vertical lifting force.
- A bridle arrangement having a long beam the length of the container with the pendant hooks or shackles applying a vertical lift to the corner fittings.

(2) Operators should be aware that containers are not built to withstand lifting while coupled unless four-point engagement is used. For example, all four top corner fittings are used as lifting points in Figure 13-14. Operators should ensure that hooks and shackles do not damage corner fittings.

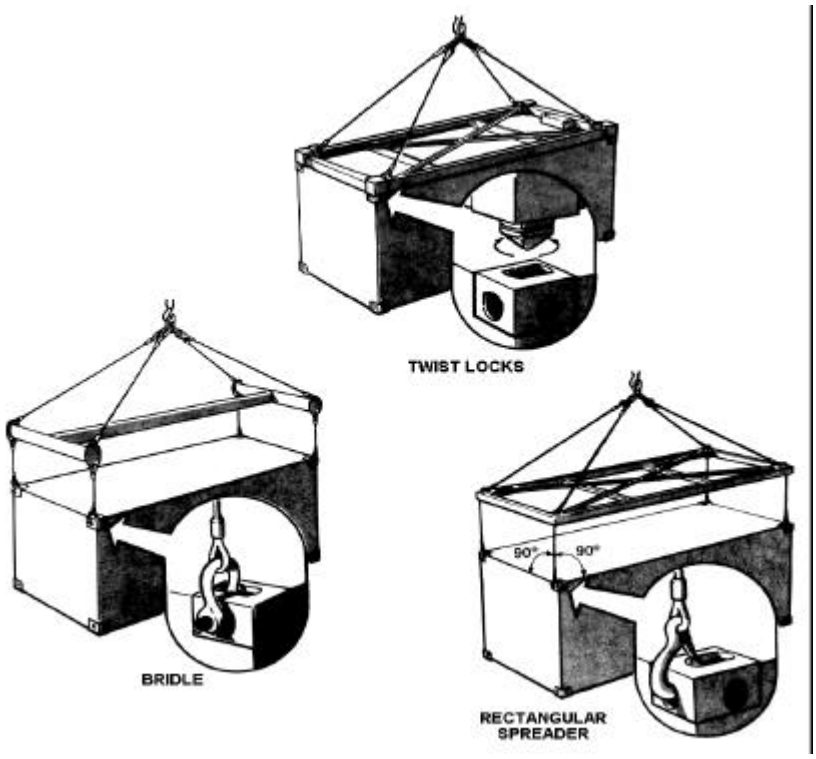

Figure 13-14. Top corner fittings for lifting containers

b. **Bottom Lifting.** Operators may lift containers by the bottom corner fittings, using hooks or special attaching devices, only under two conditions.

(1) The first condition is when sling legs are connected to one or two lateral spreaders (above the roof line of the container) with sufficient width to prevent the sling legs from

Downloaded from http://www.everyspec.com

making contact with the container. Sling legs must be long enough so that the angle of the leg is not less than 60 degrees from the horizontal.

(2) The second condition is when attachment devices are designed so that the lifting force is not exerted more than 1 1/2 inches away from the face of the corner fitting. Figure 13-15 shows container bottom lifting techniques.

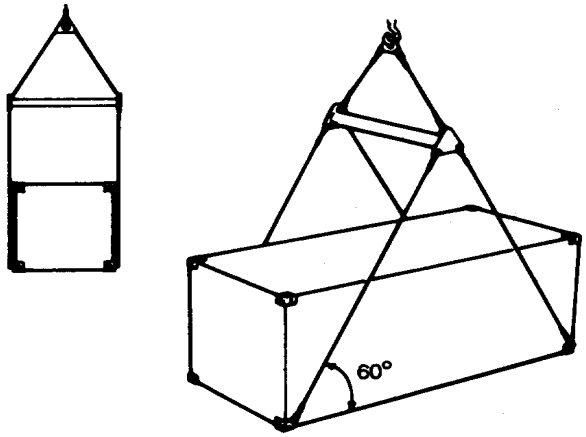

Figure 13-15. Bottom lifting techniques for containers

c. **Other Methods.** Containers handled by any method other than lifting from the corner fittings must have special features, such as forklift pockets, recesses for straddle carriers, or grapple holds.

(1) ***Forklift truck.*** Operators should ensure that forks extend the whole width of the container. The load capacity of the truck should be enough to handle the container. Never use two forklift trucks, either side by side or one at either end, to lift or move a container.

(2) ***Straddle carriers.*** Do not attempt to lift or move a container with a straddle carrier (Figure 13-16) unless the container has the appropriate recesses along the bottom.

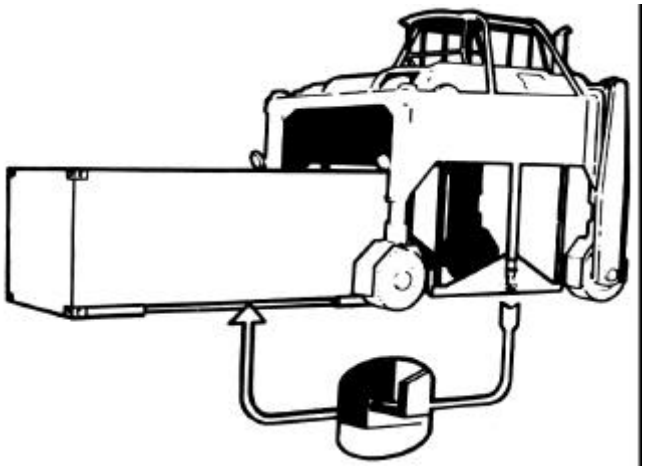

Downloaded from http://www.everyspec.com

Figure 13-16. Straddle carrier

(3) ***Grapple lift.*** Operators must ensure that proper recesses are available and used on the lifted containers.

d. **Stacking Precautions.** Operators often stack containers on piers, in transfer facilities, or in other storage areas. Proper safety precautions are also required here to prevent accidents and damage. When stacking, operators should pay particular attention to the proper alignment of top and bottom corner fittings of the containers. When putting a container on the ground or pier in a terminal area, operators will ensure that a firm, flat, level surface is provided so that the container can be supported by its four bottom corner fittings. There must be no projections on the landing surface which could possibly dunnage the bottom structure of the container.

Downloaded from http://www.everyspec.com

CHAPTER 14

CONTAINER DOCUMENTATION

14-1. INTRODUCTION. The WCA incorporates container documentation into the ocean cargo manifest, which, in turn, is distributed within 5 days after the vessel sails to the overseas POD. To accomplish this task, DOD Regulation 4500.32-R requires those shipping activities making containerized shipments to provide the WCA with a completed DD Form 1384 (TCMD). Also the cargo checker uses the TCMD to record or tally the cargo data. The TCMD is an official document that is signed by the checker as being accurate, used by other individuals to prepare additional documents, and later filed as part of the record. The TCMD may also be used to provide advance notice to the receiving terminal. Cargo checkers are not normally required to prepare TCMDs, so only a general description of some of the code entries is provided in this chapter. A separate TCMD must be prepared for each shipment entering the transportation system. The TCMDs may be machine prepared, as a punch card or an administrative message, or be manually prepared (DD Form 1384).

14-2. SHIPMENT CLEARANCE. The shipment clearance and release instructions are discussed below.

a. Container shipments require clearance and release instructions in accordance with AR 55-355, Chapter 202, and MILSTAMP. If the shipping activity is unable to meet the POE delivery date established during clearance, they advise the WCA by telephone prior to shipment to get final clearance instructions. Advance TCMDs will be submitted to the WCA as soon as possible, but not later than the following time frames—

- When the transit time from shipper to the POE is less than 24 hours, submit the TCMD 12 hours prior to the release of the container to the port.
- When the transit time to the POE is over 24 hours, the TCMD must be submitted prior to the container's release.

b. The importance of timely TCMD data from the shipper cannot be overemphasized. When documentation is not received at the WCA within the prescribed times one or more of the following may happen—

- The container may be loaded onto the vessel at the POE but not manifested.
- In some instances, due to customs requirements, the SEAVAN will not be discharged at the POD because of incomplete documentation.
- The SEAVAN may be discharged and placed in a holding area awaiting instructions from CONUS.
- When the WCA receives the outstanding shipper documentation, the WCA must publish a supplement to the basic manifest to cover those SEAVANs not on the original document.
- Erroneous POD discharge is possible.
- Additional documentation (cargo outturn reports or reconciliations) may result.

14-3. BASIC DOCUMENTATION. Container documentation reflects data applicable to the SEAVAN and its contents and clearly identifies each shipment unit. The principal document used in

Downloaded from http://www.everyspec.com

the DTS is the DD Form 1384. If any documentation problems come up the shipper should contact the appropriate WCA for assistance.

a. Under most circumstances, the TCMD or a computer printout of TCMD data is available. The cargo checker may have to record cargo data on a locally produced form. In this section we will explain how to fill out a DD Form 1384. This section is important even if you do not plan to fill one out. By understanding how to prepare it, you will know what the information in each block means. You can refer to the following illustrations to see what it looks like when filled out.

(1) ***Block 1.*** Information required is listed below.

(a) The DIC is a three-character code which indicates the purpose for which the form is being used (advance TCMD, air manifest, or water manifest documents) or the type of shipment to which it relates. The DIC also specifies the format for additional transportation that is required.

(b) As an example, Appendix B of MILSTAMP indicates that the letter "T" identifies the form as a MILSTAMP document. The letter "H" in the second position identifies the shipment as household goods. The third character, number 1, indicates that the document is being used as the principal shipping document for a single shipment that does not require clearance approval before shipment.

(2) ***Block 2.*** Information required is listed below.

(a) When a shipment is moving in a controlled container, MILVAN, or SEAVAN, the last five digits of the container number will be entered in this block.

(b) For RO/RO containers, the last four digits of the container number will be preceded by an "S" or "V" indicate whether it is a stake-and-flat bed or a van.

(c) When two or more shipment units are consolidated into a noncontrolled container (a container without permanent serial numbers), the assigned container serial number will be preceded by the shipping service code (A-Army). See Figure 14-1 for further information on filling out the TCMD.

(3) ***Block 3.*** Information required is listed below.

(a) The coded or in-the-clear address of the shipping installation, unit, or other agency appears in this block.

(b) This address code should be the same as the one appearing in the FROM block of the military shipment label on the shipping container.

(4) ***Block 4.*** Information required is listed below.

(a) The information appearing in this block provides a quick means of identifying material for manifesting, customs requirements, stevedore billing, and transportation cost.

Downloaded from http://www.everyspec.com

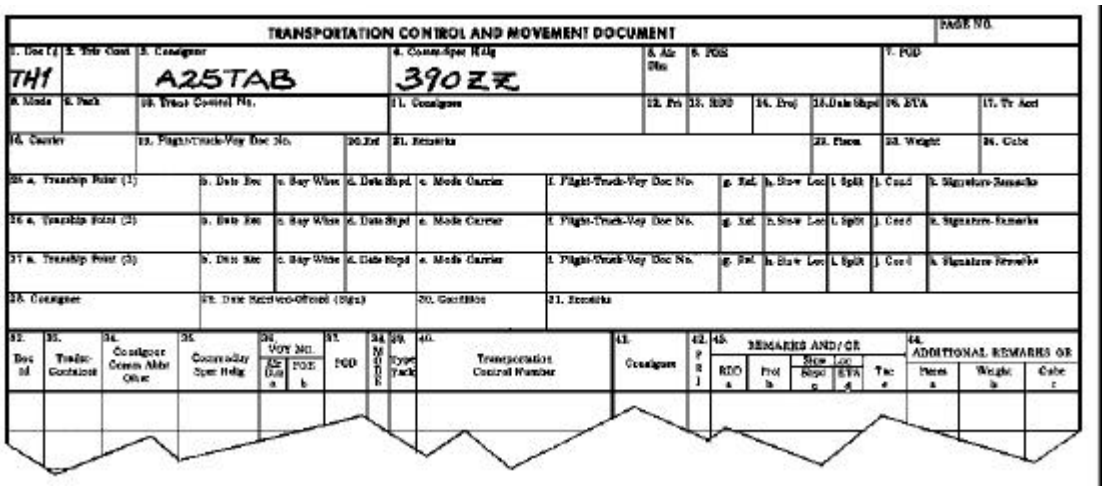

Figure 14-1. Sample portion of DD Form 1384; blocks 1, 3, 4

(b) This information also provides an indication of whether the shipment requires special attention during shipment, handling, or storage.

(c) The Water Commodity and Special Handling Code is a five- or six-position alpha, alphanumeric, numeric code, or abbreviation used to identify a specific piece of cargo. It tells cargo handlers that there is a special way to handle this particular shipment. The five-character code is developed in the following manner—

- First three positions—identify the commodity category.
- Fourth position—shows type of cargo.
- Fifth position—notes exception/handling procedures.

(d) The number in block 4 is broken down as noted: Appendix B of MILSTAMP shows that the code 390 identifies the shipment as household goods in a government container. The "Z" in the fifth position indicates that no special handling is required.

(e) The air commodity code is a two-character code. The first character of the code identifies the commodity.

(f) The second character indicates any special handling or attention that may be required; if none is needed, the code "Z" "R," "Z," or a numeral, a DD Form 1387-2 (Special Handling Data/Certification) must be attached to the shipment. Cargo checkers and warehousemen can obtain detailed handling instructions by referring to that label.

(5) ***Block 5.*** The air dimension code is used only for shipments moving by aircraft. It identifies the type of cargo aircraft capable of transporting the largest container in the shipment. This code is found in Appendix B of MILSTAMP.

(6) ***Block 6.*** Information required is listed below.

Downloaded from http://www.everyspec.com

(a) A POE is an air or ocean terminal at which troops, equipment, or material are loaded aboard aircraft or vessels. Every terminal throughout the world that is used in the transportation of DOD shipments is assigned an identification code. Ocean terminal codes indicate the major geographical area, the sub-area, and the specific port, port area, or island. The list of water port designators found in Appendix B of MILSTAMP indicates the POE code 3DK is located at the Military Ocean Terminal, Bay Area (Oakland, CA).

(b) Air Terminal Identifier Codes are three-position alpha codes that are used to identify the name and location of an air terminal. For example, the code for McGuire Air Force Base, Wrightstown, NJ, is WRI. See Figure 14-2.

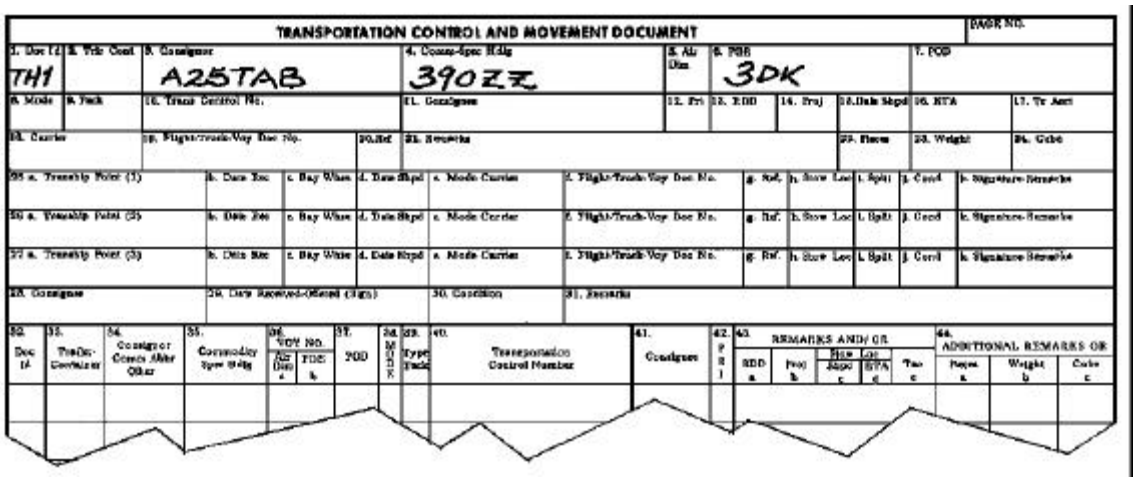

Figure 14-2. Sample portion of DD Form 1384; block 6

(7) ***Block 7.*** The same code system as that used for POEs is used to identify the air or ocean terminal where the shipment is designated to be unloaded (Figure 14-3).

(8) ***Block 8.*** Advance information as to the mode of transportation by which the shipment is arriving will be entered in this block. This information will enable terminal personnel to prepare for arrival of the particular conveyance (Figure 14-3).

(9) ***Block 9.*** Pack refers to the method of packaging a shipment unit or units together. The methods used are indicated by one of the abbreviations listed in the glossary (Figure 14-3).

(10) ***Block 10.*** Information required is listed below.

(a) Cargo checkers are particularly interested in the TCN, since during the process of checking cargo they must compare this TCN with the TCH entered in the address marking of the container. The comparison of these two numbers is the most effective way of correctly identifying a shipment. The following illustration shows the data contained in a MILSTRIP TCN.

Downloaded from http://www.everyspec.com

A	2	6	T	A	M	1	0	9	6	1	0	3	1	X	X	X
		1					2				3			4	5	6

1. Activity address code.
2. Year and Julian date of requisition.
3. Requisition serial number.
4. Suffix to requisition when filled by more than one supply agency.
5. Partial shipment indicator.
6. Split shipment indicator.

AK473120940100XAX -- 1st Increment
AK473120940100XBX -- 2nd Increment
AK4731209400XZX -- Last Increment

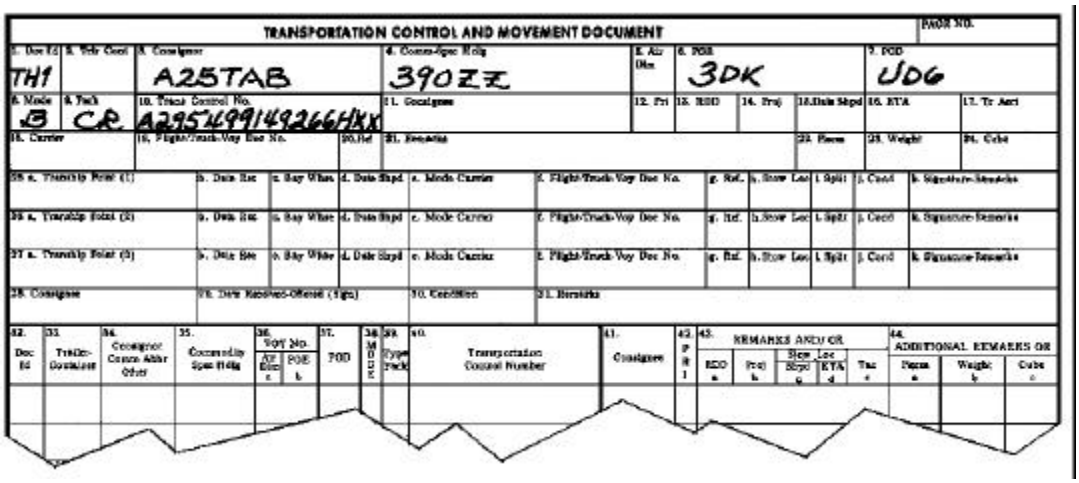

Figure 14-3. Sample portion of DD Form 1384; blocks 7, 8, 9, and 10

(b) The Department of Defense activity address code is a six-position alphanumeric code which identifies the initiator or requisitioner of supplies.

(c) The date of requisition is a four-position numeric code showing the date the request of supplies was forwarded to the initial supply source. The first number shows the last numeric digit of the calendar year. The last three numbers show the numeric consecutive day of the calendar year.

(d) The requisition serial number is a four-digit numeric code assigned by the initiator or requisitioner. Serial numbers are assigned on a daily basis ranging from 0001 to 999.

(e) A suffix code is a one-digit alpha code assigned to show partial fill of a requisition. If there is no suffix code assigned on the DD Form 1384-1 (Intransit Data Card), an "X" is used in this position.

Downloaded from http://www.everyspec.com

(f) The partial shipment code is used by the depot or shipper only. When cargo is moved from a depot or shipper in one truckload, an "X" is used in this position. When the shipment unit requires partial shipment, the TCN for the first increment would have a partial shipment code of "A," the second "B" and so on through the alphabet as required except for "X," because "X" indicates a complete shipment. When shipment codes are used, the last increment of the shipment ends with code "Z."

(g) The split shipment code is reserved for use by terminal or transshipment activities. The depot or other shipping activities always assign the code "X" to this seventeenth position.

(h) A non-MILSTRIP TCN is assigned by the origin transportation officer for cargo shipments that are not directed for movement by supply action (household goods, SEAVANs, privately owned vehicles, MILVANs, mail).

(i) Refer to Appendix D of MILSTAMP for further details on how to construct these TCN numbers. Also, see Figure 14-3.

(11) ***Block 11.*** The consignee is the unit that will receive the cargo. The activity address code entered in this block should be the same as that entered in the TO block of the address marking, or the ULTIMATE CONSIGNEE block if the shipment is going overseas.

(12) ***Block 12.*** The TP entered in this block should be the same as the TP appearing on the address marking.

(13) ***Block 13.*** The RDD is the Julian calendar date by which the shipment must be delivered to the consignee. See Figure 14-4 for further guidance.

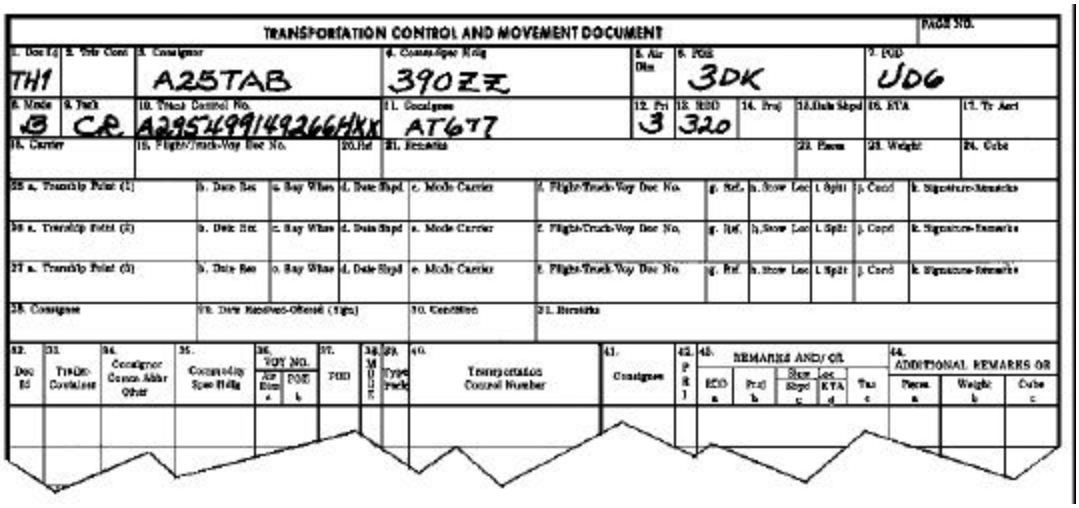

Figure 14-4. Sample portion of DD Form 1384; blocks 11, 12, and 13

(14) ***Block 14.*** This block is left blank unless the shipment unit is moving in support of a project which has been assigned a specific identification code. Again, the shipping

Downloaded from http://www.everyspec.com

transportation officer will extract this information from the supply release documents when the TCMD is prepared.

(15) ***Block 16.*** Information required is listed below.

(a) The Julian date entered in this block is the date the shipment is released to the carrier or the POE when the shipper is located in the vicinity of the POE.

(b) When the TCMD is for an air shipment, only the last two characters of the Julian calendar are used. They will be preceded by a single-character hour code to indicate the anticipated hour of release to the carrier at the point of origin.

(16) ***Block 16.*** The ETA is actually the estimate of the number of days the shipment will be in transit to the POE.

(17) ***Block 17.*** Military services and other DOD agencies that use the DTS are required to pay for the transportation and terminal services involved in the movement of shipments within the system. Four-character transportation account codes are assigned to these agencies to facilitate shipper identification for cost accounting and billing purposes.

(18) ***Block 18.*** The name of the trucking company, airline, railroad, or ship that moves the cargo is entered in this block. Figure 14-5 contains more information on filling out this block as well as blocks 15-17.

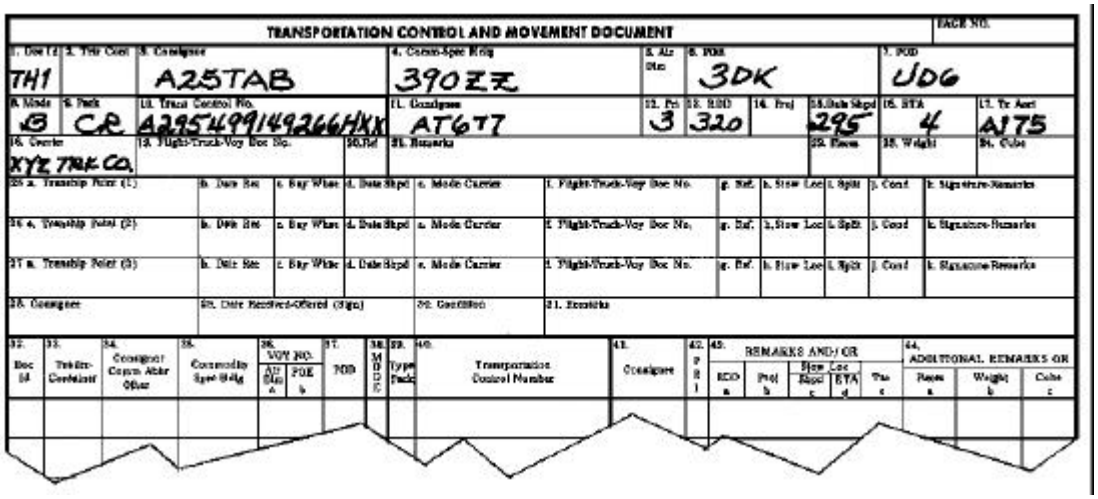

Figure 14-5. Sample portion of DD Form 1384; blocks 15, 16, 17, and 18

(19) ***Block 19.*** The license number of the truck or trailer in which the cargo is loaded is given in this block. If the shipment is to be made by air or vessel, the mission or voyage number is entered. These numbers may be obtained from the Military Sealift Command representative or Military Airlift Command representative. The MILSTAMP provides that entry of this information is optional. However, local policy may dictate that the name of the carrier and vehicle number be placed in these blocks.

Downloaded from http://www.everyspec.com

(20) ***Block 20.*** The use of this block is optional. It should not include remarks that would apply to the shipment beyond the APOE/POE.

(21) ***Block 21.*** This block is used only when a shipper is providing information which is not applicable to the entire move. For example, if a shipper is advised by the originating carrier that the shipment will be transferred to another truck before its delivery to the POE, the shipper notes this fact in the REMARKS block.

(22) ***Block 22.*** The function of checking cargo basically involves the counting and inspection of each container or item of cargo as it is transferred from one location to another. In order to determine whether there are any overages or shortages, the cargo checker must refer to the number of pieces shown in this block.

(23) ***Blocks 23 and 24.*** The weight and cube shown in these blocks is for the entire shipment unit, unless the shipment unit is moving by more than one vehicle. When a shipment unit is moving in more than one vehicle, only the number of pieces, weight, and cube loaded on the transporting vehicle will be shown. See Figure 14-6 for additional guidance.

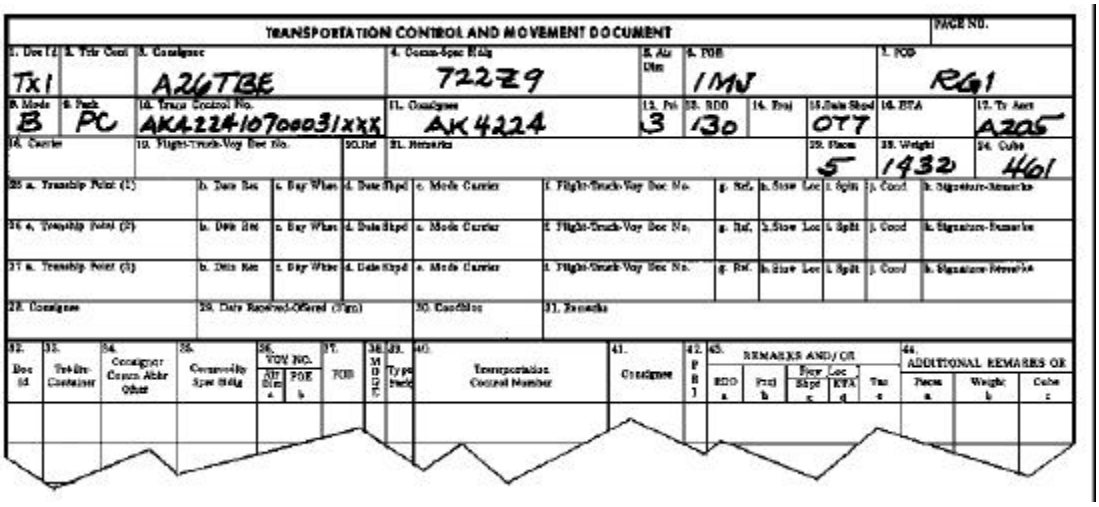

Figure 14-6. Sample portion of DD Form 1384; blocks 22-24

(24) ***Blocks 25 through 27.*** This portion of the form is completed by a cargo checker each time the shipment is transferred from one carrier to another, from a carrier to a temporary storage location, or from a temporary storage location to a carrier. The form is designed to accommodate three separate transshipments. The information that the cargo checkers enter in block "a" through "k" is used to prepare manifests, vessel stowage plans, and a number of other documents. Therefore, the cargo checker must thoroughly understand how to record the correct information in the appropriate block. Detailed instructions for completing this portion of the form are provided in the next section.

(25) ***Blocks 28 through 31.*** These blocks are completed by the consignee when the shipment has been delivered. When these blocks have been completed, the consignee will have a record of when the shipment was received and its condition upon arrival. A copy of the completed

Downloaded from http://www.everyspec.com

TCMD, signed by the consignee, may also be given to the delivering carrier as a delivery receipt to verify that the shipment has been completed.

(26) ***Columns 32 through 44.*** This portion of the form is used to provide supplemental information for special categories of shipments. When used for this purpose, the information is referred to as "trailer data" or "header data," depending upon the type of shipment it describes. Trailer data provide additional information for a single shipment unit (described in blocks 1 through 24); header data identify the RP/RO trailer, SEAVAN, or consolidation container in which the shipment is moving. When mechanically-prepared punch card TCMDs are used as prime documents, the supplemental information must be entered on separate punch cards. These supplemental cards accompany the prime document (TCMD) and are referred to as "trailer" or "header" cards. When the manually prepared TCMD is used as a prime document, these cards are not required. The MILSTAMP Appendix B identifies the data in these blocks as personal property ownership data.

c. Copies of the TCMD (advance copy already submitted to WCA), or similar documentation containing TCMD data for each enclosed shipment, will be forwarded in the SEAVAN. Copies are to be placed in a waterproof envelope labeled LOAD LIST and securely attached to the inside of the loading door.

d. Vans are moved to the loading terminal on bills of lading or TCMDs as prescribed in MILSTAMP. When a TCMD or similar nonnegotiable document is used, a signed copy is kept by the shipper to record acceptance by the originating carrier. Also, the shipper gives one copy of the bill of lading, TCMD, or other document to the originating line-haul carrier with instructions to give it to the gate checker, guard, or other representative of the ocean carrier upon delivery of the container at the ocean carrier's container yard.

e. The shipper is responsible for any documentation peculiar to the cargo and the attachment of these documents to the container.

CAUTION: Export cargo can be easily damaged en route if the required documentation is incomplete or inaccurate and is not forwarded or received by the WCA in a timely manner. Since the TCMD is the source document permitting accurate and timely receipt/lift data and ocean manifesting, its importance cannot be overemphasized .

14-4. TALLYING CONTAINERS. Cargo tallying provides a continuing record of the container from the time the container is unloaded from the ship until it is shipped from the marshaling area. To accomplish this, checkers are normally stationed at any or all of the following locations:

- Each working shipside crane (transfer point between ship and transporter).
- Each hatch or cell being worked.
- Transfer point between lighterage and land transporter (LOTS operation).
- In the marshaling area where containers are placed in, or removed from, the container stack; each container stuffing/stripping operation; and the yard entry/exit point.

a. **Incoming Containers.** To tally incoming containers, these steps must be followed—

Downloaded from http://www.everyspec.com

(1) The cargo checker at the stuffing and stripping location receives a DD Form 1384 for the container and DD Form 1384 for all the cargo in the container. The cargo checker will also receive a container content discharge tally list, which may be a DD Form 1384, a computer printout or a locally produced form. If using a DD Form 1384, fill out the following columns—

- Serial Page Number. Enter the page number from the block in the upper right corner of each TCMD for each TCN or shipment unit.
- Pier Location. Enter the BBP yard location.
- Time. Enter the time the container is stripped.
- Tally Date. Enter the Julian date.
- Piece Count. Enter a stroke tally (for example, 1/) to verify the number in the MAN PCS (manifested pieces) column of the tally list.

(2) Any discrepancies between the manifested pieces and the actual pieces in the container are noted by pen-and-ink changes to the tally list so that the tally shows the actual number of pieces received.

(3) The TCMDs are also annotated with the following data—

- Block 25a. Enter BBP.
- Block 25b. Enter the date the cargo was received at the BBP.
- Block 25c. Enter the BBP warehouse or yard location of the cargo after it is staged.

(4) When clearance transport arrives to pick up cargo from the BBP, the checker makes the following entries on the TCMD:

- Block 29. Enter the date shipped (for instance, the day the cargo was released to the consignee).
- Block 30. Optional use.
- Block 31. Get signature of individual receiving the cargo and put down any optional remarks. Also, pull a copy of the TCMD for the documentation element.

Step 1. The documentation element gives the chief cargo checker a discharge tally list for the containers to be tallied from the ship. If an automated system is not available, DD Forms 1384 may be used.

Step 2. The chief cargo checker distributes these documents to the appropriate checkers, who then use them as tally sheets. As a container comes off the ship, the checker compares the container serial number with that shown on the tally list (or DD Form 1384, as appropriate). If the serial numbers agree, the checker places a check mark on the tally beside the number. If a lifted container is not aboard the ship, the checker notes this fact opposite the container list number. The checker notes opposite the listed container number such irregularities as—

- Damage to the container or its contents.
- Broken or missing seals or locks, or indication of tampering or pilferage.
- A container seal number differing from that shown on the tally document.

Downloaded from http://www.everyspec.com

Step 3. Cargo checkers record on the tally list serial numbers of containers unloaded from the ship that are not included on the discharge tally list or that have no DD Form 1384. When the container is relocated, the new location is entered in the DD Form 1384.

Step 4. At the end of the shift, cargo checkers meet the chief cargo checker to iron out any discrepancies. The chief then prepares a consolidated tally list which is turned in to the documentation element.

(5) At the end of each shift, all cargo checkers from that shift meet with the chief cargo checker to compare tally lists and to reconcile any discrepancies between the tally sheets and they physical count. Based on data derived from the tally lists, the chief cargo checker prepares a consolidated discharge list which he turns in together with the TCMDs to the documentation section.

b. **Containers in a Marshaling Yard.** For containers arriving at the marshaling yard from shipside, the cargo checker verifies the container serial number against that shown on the discharge tally list and makes the appropriate entries as to yard location in blocks "25," "26," and "27" of the DD Form 1384. After the cargo checker has signed the DD Forms 1384, they are filed in a TCMD marshaling yard file until the container is ready to be cleared from the yard, or is relocated in the yard.

c. **Container Stuffing and Stripping.** Container stuffing and stripping is accomplished primarily at the consignee/consignor area. It will be necessary, however, to perform some stuffing and stripping service at the water terminal (marshaling area).

Downloaded from http://www.everyspec.com

CHAPTER 15

CONTAINER CONSTRUCTION AND INSPECTION

15-1. INTRODUCTION. In order to inspect containers, cargo handlers must first be familiar with the many different types and their construction. They must also know the kinds of structural damage that would cause the container to be rejected during an inspection.

15-2. COMMERCIAL CONTAINER CONSTRUCTION. The various containers and how they are built are discussed below.

a. The closed-top, dry cargo container comprises the majority of the container fleet. It is made of steel, aluminum, plywood, plastic, fiberglass, or a combination of these materials. This container has hinged rear doors for stowing and unstowing cargo. Cargo is normally palletized or unitized.

(1) ***Steel container.*** Dry cargo type containers can be 20, 30, or 40 feet long by 8, 8 1/2, or 9 feet high. The 20- and 30-foot long containers often have forklift pockets; the 40-foot long container is not provided with forklift pockets. A typical steel container is made of corrugated sheet steel walls that are welded to the main structural top and bottom side rails and end frames that are of fabricated or shaped steel sections (Figure 15-1). The end frames have fittings (steel castings) at all eight corners that are usually welded to the four corner posts, top and bottom side and front rails, and rear doorsill and header. The roof can be flat or corrugated sheet steel welded to the top side and end rails and door header; it may have interior roof bows for support. The doors are usually plymetal (steel-faced wood) panels fitted with locking and antirack hardware and weatherproof seals. The floor may be soft or hard laminated wood, planking, or plywood either screwed or bolted to the cross members.

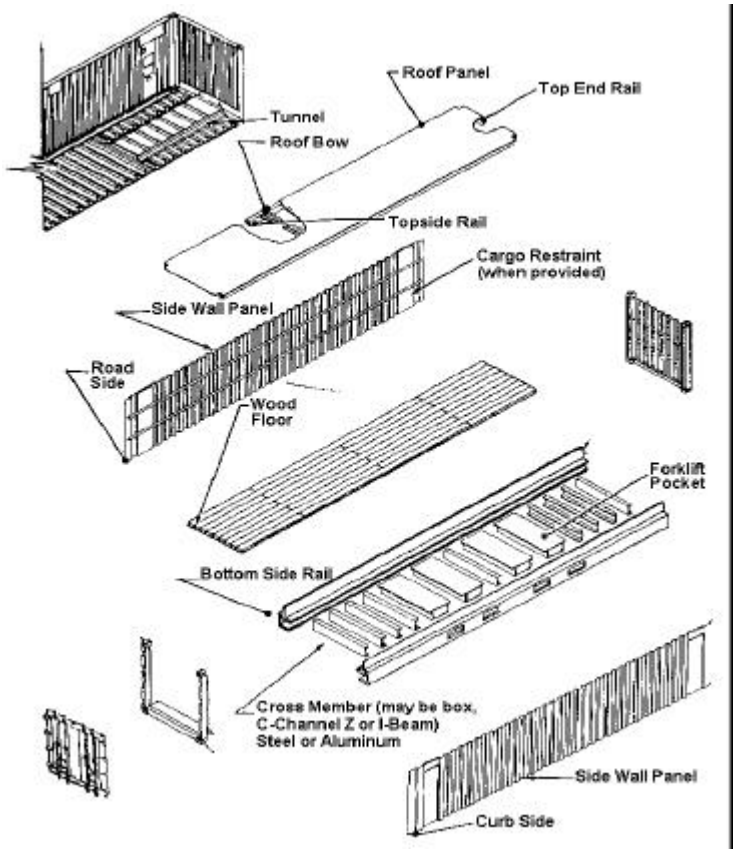

Figure 15-1. Exploded view of typical steel container

Downloaded from http://www.everyspec.com

(2) ***Aluminum container.*** A typical aluminum container often referred to as aluminum/steel container usually has steel end frames, and steel-shaped or extruded aluminum side rails (Figure 15-2). The walls can be built of aluminum interior or exterior intermediate posts covered with sheet aluminum that is normally riveted to the posts. The inside walls have a plywood liner riveted to the intermediate posts. The nominal dimensions and many construction details are similar to those of steel containers. Roof bows, which support the aluminum roof panel, are aluminum extrusions that are bolted, riveted, or welded to the top rails. Cross members of shapes indicated for steel containers are either steel or aluminum that are bolted, riveted, or welded to bottom side rails.

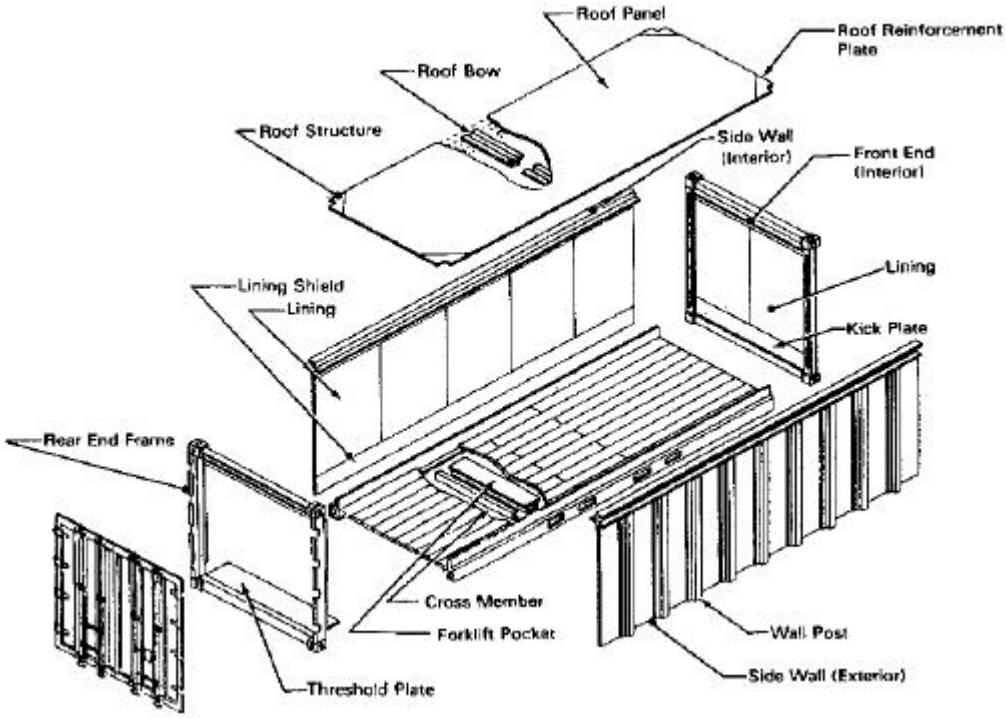

Figure 15-2. Exploded view of a typical aluminum container

(3) ***FRP container.*** A typical FRP container is constructed of steel framing having FRP panels on the side walls, front-end wall, and roof. Normally, there are no roof bows used to support the roof panel. These panels are usually imbedded in a mastic, to provide watertightness, and are riveted to the top and bottom rails and the corner posts. The door panels are of FRP and provided with steel locking and antirack hardware and waterproof seals. The floor cross members can be box, C, Z, or I-beam sections. The floor may be of soft or hard laminated woods, planks, or plywood that is screwed or bolted to the cross members. The nominal dimensions and many construction details are similar to those of the steel container.

b. The open-top (bulk), dry cargo container (covered by a tarpaulin when loaded) is built like the closed-tip container except it may also be stowed or unstowed through the top. Cargo

Downloaded from http://www.everyspec.com

normally has physical characteristics which can be more efficiently stowed through the top of the container than through the door. Examples include heavy machinery, bulk grain, cement, fertilizer, and long lengths of pipe or lumber.

c. The flatrack container is essentially a platform with corner posts. It has a floor bed with front and back ends or posts but no side walls or roof. The corner posts or ends are collapsible, reducing shipping space when shipping empty flatracks. This container is useful for unit moves because it can handle equipment and vehicles that are too wide for an 8-foot wide container but which will fit in to selected container cells. Some flatracks are half height (4 feet high).

d. The refrigerated container is insulated with a refrigeration unit mounted internally or externally. This container normally has both refrigeration and heating ability. It has the same general construction as the closed-top container although capacity is reduced to accommodate insulation and the need for air circulation around or within the load. Cargo includes frozen foods, fresh produce, medical supplies, electronic equipment, and other items requiring stabilization of temperatures.

e. The insulated/ventilated container is an insulated container without a refrigeration unit, designed to prevent wide temperature variance within the container by permitting fresh air to circulate around the cargo. In extremely cold areas, a heating element prevents freezing of cargo.

f. The bulk liquid container is normally made of stainless steel insulated with fiberglass. The container shell is equipped with either a single or twin barrel with a 20-inch full-opening manhole for each barrel. It has a discharge valve at the rear and a heat panel for reheating contents. It accommodates liquid cargo or cargo capable of being liquified by heating. This container comes in varying capacities up to 5,000 US gallons.

15-3. CONDUCTING A CONTAINER ACCEPTANCE INSPECTION. When inspecting commercial containers, make every effort to conduct the inspection in the presence of the lessor or the owner's representative. This requirement does not apply to MILVAN.

a. **Container Inspection Report.** Cargo handlers fill out a container inspection report as the inspection progresses. These reports are made according to locally designed formats as there is no government-produced form for this purpose. Each report indicates the acceptance or reasons for rejecting a container.

NOTE: To hold the inspection time of a container to a minimum, once sufficient damage has been identified to cause rejection of the container, the inspection will stop.

b. **Rejection Criteria.** Inspect the primary structure for major defects in the main structural members (top and bottom side rails, top and bottom end rails, doorsill and header, corner posts and corner fittings) which affect the structural integrity of the container. Look for—

- Holes, tears, and fractures.
- Any cracked or suspect welds in steel instruction.
- Loose or missing fasteners in aluminum construction.

Downloaded from http://www.everyspec.com

- Dents or bends on any surface of the main structural members of 3/4 inch (19 millimeters) or greater in depth, regardless of length.
- Improper splices.
- More than two splices per bottom side rail or topside rail.
- More than one splice in bottom end rail or door header.
- Any splice in the doorsill.
- Corrosive failure.

c. **Rejection Criteria for the Rear End and Door Assembly.** When inspecting the rear end and door assembly, look for—

- Broken or improper operation of the door locking rods, locking cams, handles, handle retainers, locking bar mounting brackets, hinges, or documentation holders.
- Missing or broken hinge pin or hinge pin weld.
- Missing or loose fasteners or brackets.
- Torn, leaking, distorted, or improperly spliced door seals (gaskets).
- Door panel having holes or improper repair.
- Door header or doorsill that is distorted, cut, or torn which would prevent watertight sealing of the doors.
- Crushed seal or broken, loose, or missing cam retainers.
- Corrosive failure of any part or major damage to rain gutter.

Figure 15-3 shows a damaged rear end frame and Figure 15-4 shows a damaged door assembly. Any one of the defects shown is reason for rejection.

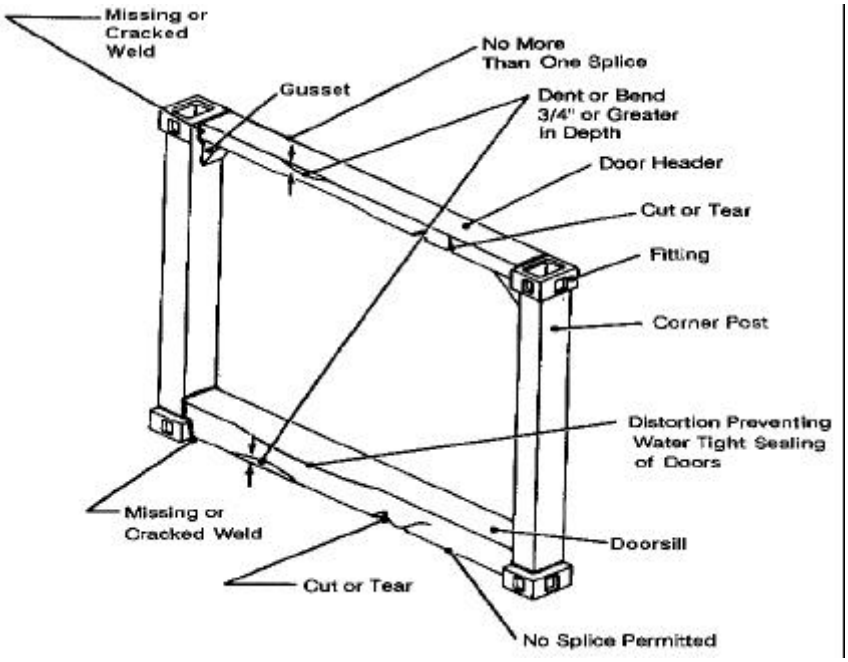

Figure 15-3. Defects of rear end frame causing container rejection

Downloaded from http://www.everyspec.com

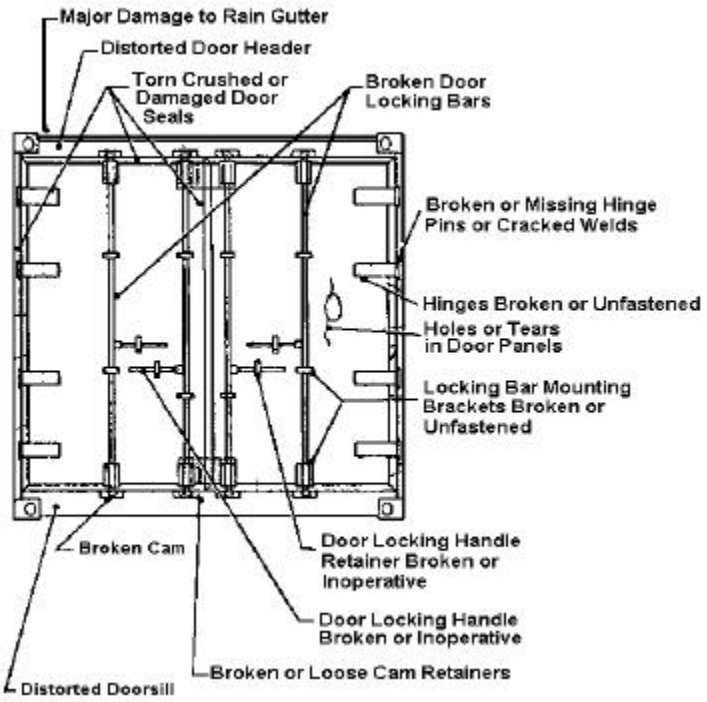

Figure 15-4. Damaged rear end and door assembly

d. **Container Inspection Steps.** Providing the rear end of the container is acceptable, enter the container. Close the door and inspect for light penetration; then inspect the interior for damage to the floor. Look for stains from any substance which may damage cargo. Make sure there are no breaks, splits, or open joints in the boards where water may come through. Also make sure that boards are not rotted, splintered, or warped. Fasteners should be secure and free of corrosion. Also inspect the roof, roof bows (Figure 15-5, page 15-6), door, door seals, threshold plate, and interior walls.

(1) In MILVANs that are provided with an internal restraint system, inspect the slots in horizontal and vertical rails to ensure that they are not damaged, and that the locking mechanisms on the end of the load bracing cross beams are operational. Inspect to see that these beams have not been bent, crushed, or bowed (Figure 15-6, page 15-6).

(2) With no apparent damage to the interior, inspect the outside of the container: curb side, front end, then roadside. Inspect for damage to the top and bottom side rails, top and bottom rail ends, forklift pockets, corner posts and fittings, wall panels, repairs, markings, and data plates. Also, check for corrosion. Figure 15-7, page 15-7 shows forklift pocket damage.

Downloaded from http://www.everyspec.com

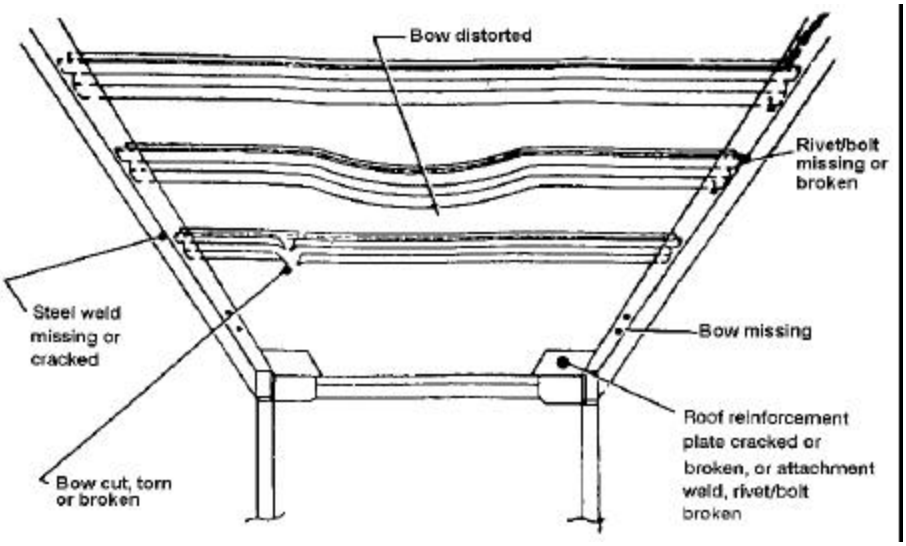

Figure 15-5. Unacceptable interior roof damage

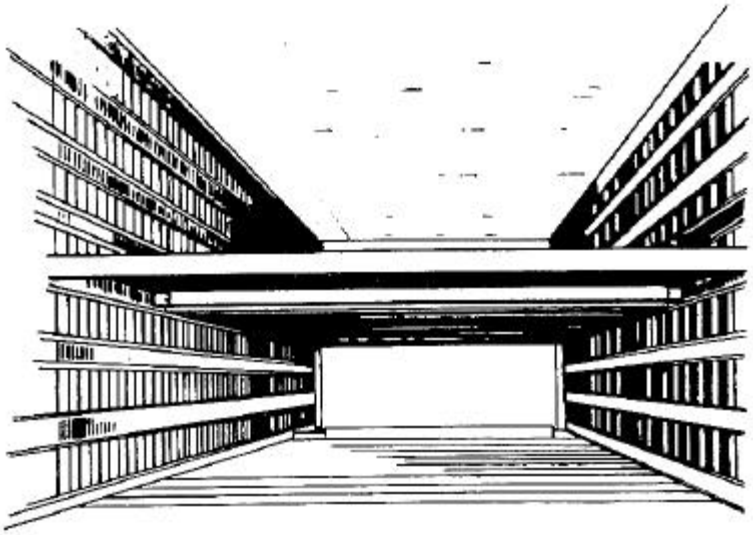

Figure 15-6. MILVAN-cargo restraint system

e. **Markings.** These are numbers, symbols, and letters that identify the owner of the container, and the tare and gross weight of the container in kilograms and pounds. These markings should be located on both ends and sides of the container. Discrepancies on marking and data plates include—

Downloaded from http://www.everyspec.com

- Stenciled markings not indicating a gross weight of 44,800 pounds (20,320 kilograms) for a 20-foot container.
- Missing TIR approval/plate.
- Manufacturer's data plate missing or illegible.
- International CSC plate illegible, not indicating a maximum gross weight of 44,800 pounds (20,320 kilograms) for 20-foot container, or not showing a current inspection date.

Any discrepancies or omissions in these markings justify rejecting the container.

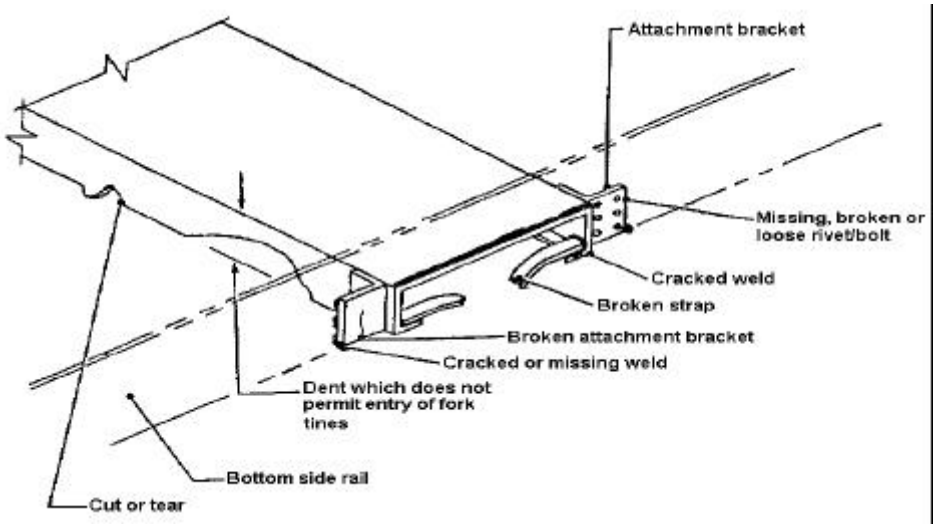

Figure 15-7. Examples of forklift pocket damage

(1) The TIR plate/marking shows approval for intermodal transport under regulations of foreign customs authorities for movement of containers across international borders.

(2) The manufacturer's data plate identifies container design.

(3) The International CSC plate indicates that the container is structurally safe.

f. **Roofing Check.** Inspect for holes, damage to corner fittings apertures (openings), and damage to reinforcement plates, topside rails, top end rail, door header, and roof panel. Also inspect for corrosion (Figure 15-8, page 15-8).

g. **Understructure Inspection.** Inspect for damage to the side and end rails, sill, and cross members (Figures 15-9 through 15-11, pages 15-8 and 15-9). Also check for loose or missing floor fasteners, cracked or suspect welds, loose or missing bracket fasteners, and excessive corrosion.

h. **Inspection Completion.** Complete and sign the container inspection report when inspection is finished. This inspection procedure is designed to give you an acceptable sequence and a guide as to what to look for, and determine what is or is not acceptable. Many of your

Downloaded from http://www.everyspec.com

decisions for acceptance or rejection may be based on your own judgment. But at all times, inspect the container to protect the best interests of the government.

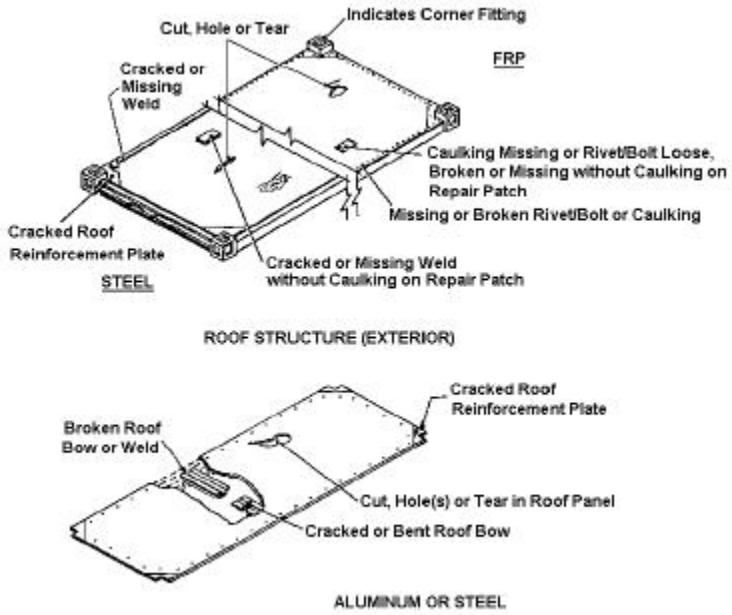

Figure 15-8. Examples of roof damage

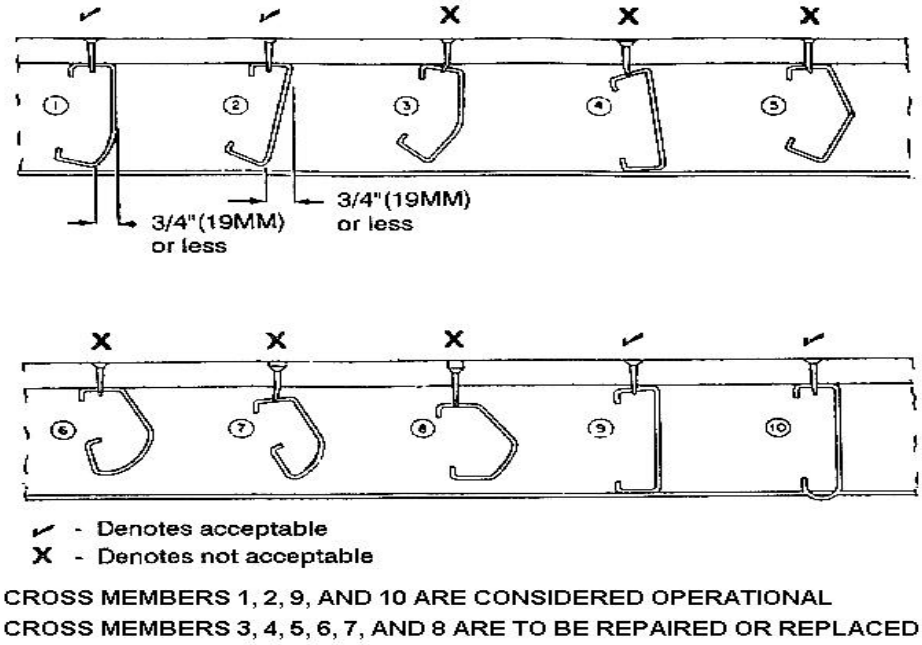

Figure 15-9. Examples of cross member damage

Downloaded from http://www.everyspec.com

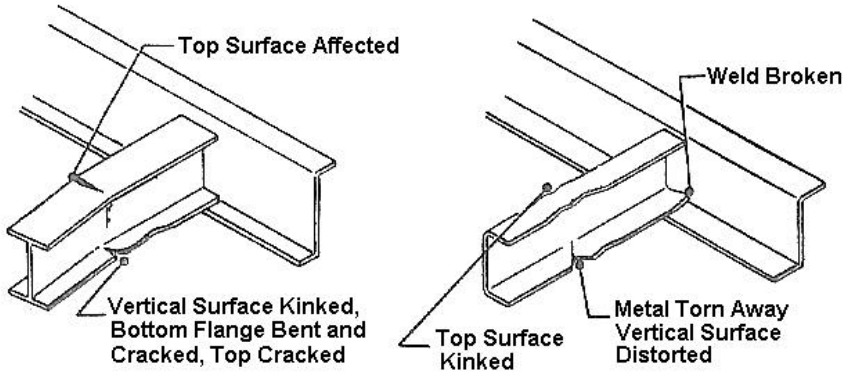

Figure 15-10. Cross member damage requiring replacement

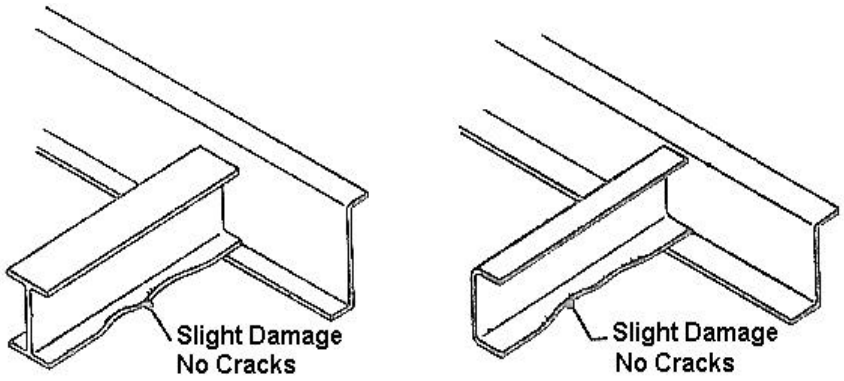

Figure 15-11. Cross member damage not requiring replacement

Downloaded from http://www.everyspec.com

PART FIVE

AIR TERMINAL OPERATIONS

CHAPTER 16

AIR MOVEMENTS

16-1. INTRODUCTION. This chapter gives an overview of planning and loading aircraft. For detailed information on documentation and loading specific cargoes aboard aircraft, refer to FM 55-9 and DOD 4500.9-R, Part III Mobility.

16-2. AIR MOBILITY COMMAND. Personnel who prepare load plans must be familiar with the types and characteristics of available aircraft.

a. Cargo handlers must be familiar with the C-130, C-141, C-17, KC-10A and the C-5 aircraft. All five aircraft are designed primarily as transport aircraft. Their cargo compartments can be configured to accommodate general bulk or palletized cargo, vehicles, and troops. The wide range of cargo carried by these aircraft, along with the many combinations of loads, provides great flexibility in moving troops and equipment. All five aircraft have long-range mission capability, possess roller-conveyor systems for using the 463L pallet system, and have hydraulic ramp systems for ease of loading and off-loading.

b. Movement of the MILVAN container in Air Force aircraft requires restraint of the container to a platform compatible with the 463L handling system. The 463L pallet will be used as a logistic mobility platform.

16-3. AIRCRAFT LOADING DATA. Some general rules of loading apply to all aircraft.

a. **General Data.** The following are some loading considerations for cargo handlers:

NOTE: Refer to FM 55-9 for guidance for loading unit cargo aboard AMC aircraft.

(1) Plan to move general bulk cargo (boxes, crates) on the backs of cargo-carrying trucks or trailers.

(2) Use only forklifts rated at a lifting capacity equal to or greater than the cargo being loaded. The minimum tine length of the forks is 72 inches for ground handling of 463L pallets.

(3) The amount cargo loaded in the beds of trucks or in trailers should not exceed the allowable loads listed in DOD 4500.9-R, Part III Mobility.

(4) Use a minimum of 3/4 inch shoring when loading a track vehicle with metal cleats, studs, or other gripping devices that will damage the aircraft floor.

Downloaded from http://www.everyspec.com

(5) Do not deflate vehicle tires to reduce vehicle height. Pneumatic tires inflated at a level of 100 psi or less do not require parking shoring if parked on the aircraft treadways. Tires inflated over 100 psi will be treated as hard rubber tires and may require parking shoring according to floor limitations.

(6) Do not use book weight or dimensions of items for weight and balance purposes when actual flying will take place. Use scale weight.

b. **Specific Data.** The characteristics of all five transport aircraft are discussed below.

(1) ***C-130 E/H.*** The C-130 series aircraft is a high-winged, turboprop airplane designed for tactical, theater type missions (Figure 16-1). It is the primary aircraft utilized by the AMC for tactical missions. This aircraft is used when moving units within a theater of operations. The peacetime ACL based on 2,500 NM for a C-130 is 25,000 pounds; the wartime ACL based on 1,175 NM is 35,000 pounds.

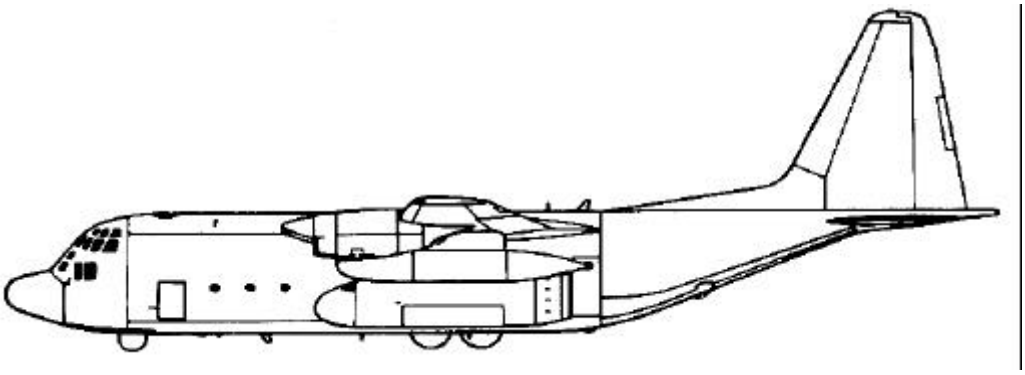

Figure 16-1. C-130 aircraft

(a) *Palletized cargo restrictions.* The C-130 can accommodate up to six 463L pallets as follows:

PALLET POSITIONS	MAX WEIGHT	MAX HEIGHT
1-4	10,354 pounds	96 inches
5	8,500 pounds	96 inches
6	4,664 pounds	76 inches

NOTE: Maximum weight includes weight of pallet and nets.

PASSENGER LOADING

Web passenger seats	90 passengers
Paratroops	64 passengers
Full side wall seats only	42 passengers
Maximum on over water flights	74 passengers

Downloaded from http://www.everyspec.com

(b) *Rolling stock restrictions.* Whenever possible, cargo handlers should load rolling stock on the treadways of the aircraft. Vehicles with pneumatic tires will have a minimum spacing of 4 feet between axles. If this spacing cannot be obtained, the axles will be treated as a single axle and single axle limitations will apply. Vehicle height restrictions will be according to FM 55-9.

(2) ***C-141.*** The C-141 aircraft is a high speed, swept-wing, turbofan jet airplane designed for strategic, intertheater type missions (Figure 16-2). The C-141 is the primary aircraft for deployment to another theater or operation. The peacetime ACL of the C-141 based on 3,500 NM is 39,600 pounds, and its wartime ACL based on 3,500 NM is 50,600 pounds.

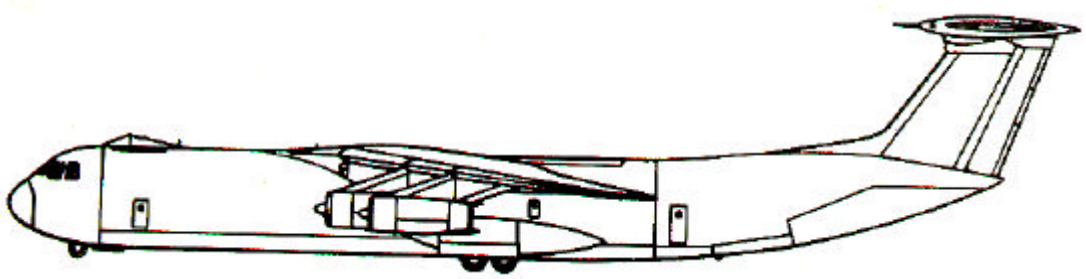

Figure 16-2. C-141 aircraft

(a) *Palletized cargo restrictions.* The C-141 can accommodate up to thirteen 463L pallets as follows:

PALLET POSITIONS	MAX WEIGHT	MAX HEIGHT
1	10,355 pounds	76 inches
2-12	10,355 pounds	96 inches
13	7,500 pounds	76 inches

NOTE: Maximum weight includes weight of pallet and nets.

PASSENGER LOADING

Web passenger seats over land	200 passengers
Paratroops	156 passengers
Airline seats/one comfort pallet	143 passengers
Full side wall seats only	98 passengers
Maximum on over water flights	153 passengers

(b) *Rolling stock restrictions.* Whenever possible, cargo handlers should load wheeled and tracked vehicles on the treadway. Vehicle height restrictions will be according to

Downloaded from http://www.everyspec.com

FM 55-9. Cargo handlers will not load cargo between station 292 and station 322, or stow any wheeled loads outboard the treadways in the troop door area. The affiliated ALCS should be consulted for shoring requirements for pneumatic tires with weights exceeding 5,000 pounds. Total combined cargo weight loaded between station 322 and station 678 should not exceed 45,000 pounds. When loading cargo on the ramp of the aircraft, cargo handlers should ensure the CB of the cargo is not positioned aft of station 1473. When the load consists of palletized netted cargo or floor loaded cargo secured with straps, maintain a 30-inch space between the cargo and nearest forward occupied seat. When cargo consists of vehicles, canned engines or other large items secured with chains, the 30-inch spacing is not required.

(3) ***C-5 Galaxy.*** The C-5 is a high-speed, swept-wing, turbofan jet aircraft used for strategic, intertheater missions (Figure 16-3). It is primarily designed to carry outsized or overweight equipment. Special features of the aircraft are its ability to load/unload from either end of the cargo compartment, and a kneeling capability which allows for lowering the aircraft to facilitate loading/unloading. A forward, hinged visor door and ramp system provide front end loading capability. Aft cargo doors and a ramp system provide aft end loading. This combination provides a RO/RO capability for vehicles and palletized cargo. The kneeling capability is provided through a hydraulic system that allows the aircraft to be lowered on its landing gear. There are three kneeling positions: forward, aft, and level. The kneeling capability facilitates ramp loading/off loading by compensating for the 9-foot height of the cargo floor above the ground. The C-5 is not a solution to the difficulties of planning a unit move and will not be used unless outsize/overweight cargo is displayed. The peacetime ACL of the C-5 based on 3,500 NM is 130,200 pounds, and its wartime ACL based on 3,500 NM is 151,400 pounds.

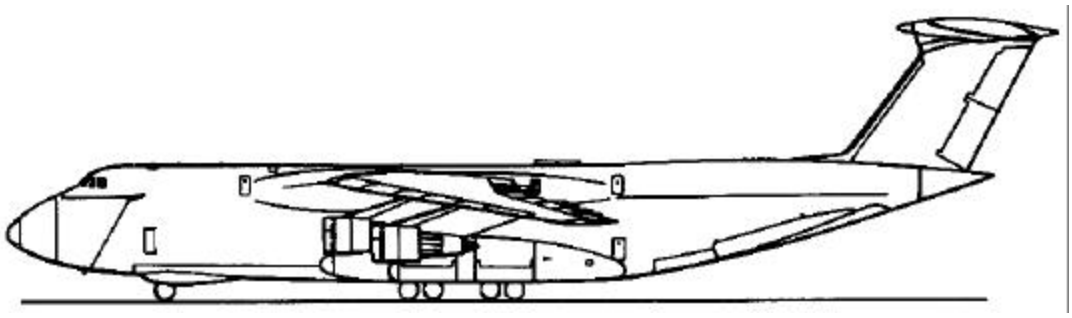

Figure 16-3. C-5 Galaxy aircraft

(a) *Palletized cargo restrictions.* The C-5 can accommodate up to thirty-six 463L pallets as follows:

PALLET POSITIONS	MAX WEIGHT	MAX HEIGHT
1-2	7,500 pounds	96 inches
3-34	10,354 pounds	96 inches
35-36	7,500 pounds	70 inches

Downloaded from http://www.everyspec.com

NOTE: Maximum weight includes weight of pallet and nets.

PASSENGER LOADING

Airline seats (permanent)	73 passengers
Maximum on over water flights	73 passengers

(b) *Rolling stock restrictions.* The C-5 is a unique aircraft because its floor does not have treadways. The floor bearing pressure is the same over the entire floor. However, there are some restrictions. The maximum single axle load is 36,000 pounds. The maximum track vehicle weight is 129,000 pounds. Floor limitations are as follows:

- Between station 517 and station 724--20,000 pounds single axle or combination in any 40-inch longitudinal area.
- Between station 724 and station 1884--36,000 pounds single or combination axles in any 40-inch longitudinal area.
- Between station 1884 and station 1971--20,000 pounds single axle or combination of axles in any 40-inch longitudinal area.

(4) ***C-17.*** The C-17 aircraft four fuel-efficient turbofan engines are integrated with a swept wing that uses superficial airfoil technology and winglets to provide intercontinental range with heavy payloads (Figure 16-4). The C-17 is specifically designed and has the ability to transport all types and large quantities of military fighting equipment and associated personnel. When the need is urgent and the terrain or the enemy will not let the airlift aircraft land, when surprise is essential, or when it is important to get troops and equipment on the ground quickly, the C-17 can employ whatever airdrop option is needed. The peacetime ACL of the C-17 based on 3,500 NM is 135,000 pounds and the wartime ACL of the C-17 based on 2,500 NM is 170,900 pounds.

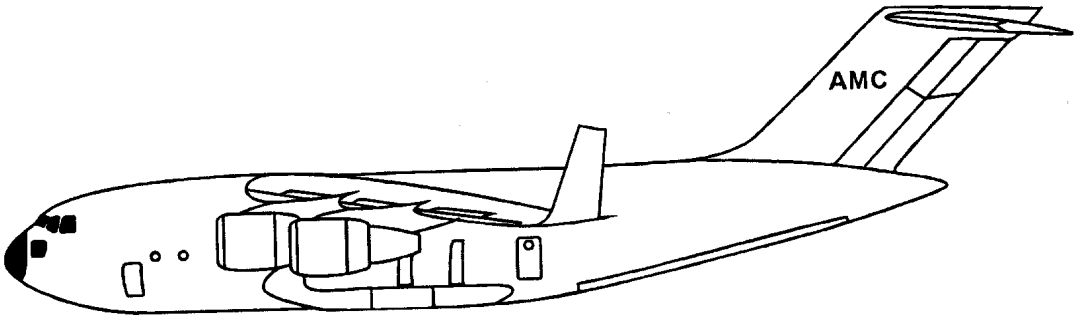

Figure 16-4. C-17 aircraft

(a) *Two palletized cargo systems.* These two systems include—

- Double-Row Logistics System - 18 pallets.
- Single-Row Aerial Delivery System - 11 pallets.

Downloaded from http://www.everyspec.com

PALLET POSITIONS	MAX WEIGHT	MAX HEIGHT
1-14	10,355 pounds	96 inches
15-18	10,355 pounds	96 inches

NOTE: Maximum weight includes weight of pallets and nets.

PASSENGER LOADING

Side wall seats	54 passengers
Center seats (additional seat kit)	48 passengers
Paratroops	102 passengers
Maximum on over water flights	102 passengers

(b) *Rolling stock restrictions.* The cargo floor is a load-carrying structure across its whole width. Vehicles can traverse its whole area and maneuver freely during loading operations. In flight, single 36,000 pound axle loads or a combination of axles weighing up to 40,000 pounds may be carried on any continuous 42-inch longitudinal length of cargo floor area between fuselage stations 578 and 1073.

(5) ***KC-10A.*** The KC-10 Extender is a swept-wing, wide-body tri-jet with a dual-purpose mission as an aerial refueler and cargo/passenger aircraft (Figure 16-5). Unit personnel, equipment, and material are carried on the deck, and bulk fuel tanks are contained in the lower compartments of the fuselage for transporting fuel to conduct aerial refueling operations. The peacetime and wartime ACL of the KC-10 based on 4,000 NM is 100,000 pounds.

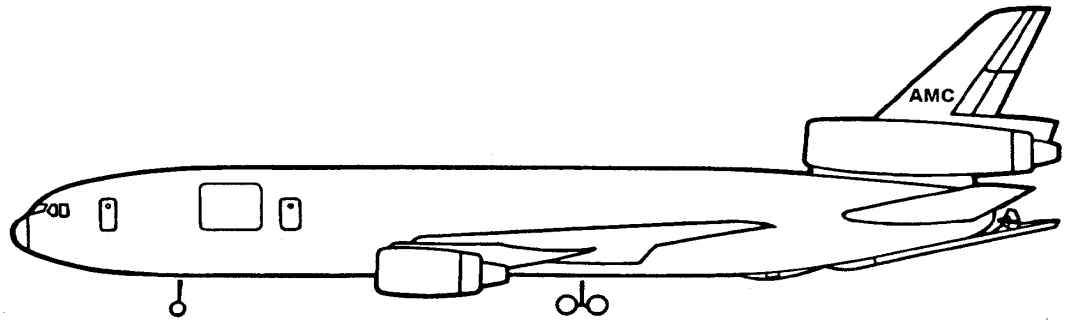

Figure 16-5. KC-10A aircraft

(a) *Palletized cargo restrictions.* The KC-10 can accommodate up to twenty-two 463L pallets as listed below. (See FM 55-9, Chapter 2, for KC-10 cargo pallet build-up profiles.)

PALLET POSITIONS	MAX WEIGHT	MAX HEIGHT

Downloaded from http://www.everyspec.com

2-6 (left and right)	6,500 pounds	96 inches
7-10 (left and right)	10,000 pounds	96 inches
11 (left and right)	10,000 pounds	88 inches
12 (left and right)	6,500 pounds	88 inches

NOTE: Maximum weight includes weight of pallets and nets.

The KC-10 has two 463L pallet configurations available:

- Code B. 22 pallet positions available (2L/R through 12L/R).
- Code D. 16 pallet positions available (5L/R through 12L/R).

PASSENGER LOADING

Airline seats (Code B)	10 passengers
Airline seats (Code D)	69 passengers
Maximum on over water flights	69 passengers

(b) *Rolling stock restrictions.* The unique loading requirements and limitations for the KC-10 require special attention. Any time the use of a KC-10 for airlift is anticipated, arrangements must be made for a wide-body loader at the location. Unlike other AMC aircraft, the KC-10 does not have a ramp at ground level to roll equipment on and off.

(c) There are three acceptable loading methods for use with the 463L pallet. The methods are as follows:

- The first method is to prepalletize and secure cargo on individual 463L pallets before loading.
- The second method is to place empty 463L pallets into the aircraft to create a pallet subfloor.
- The third method uses a combination of the first two methods.

16-4. DEPLOYING UNIT'S RESPONSIBILITIES. The responsibilities of the supported forces are outlined in AMC Pamphlet 36-1. Some of the user responsibilities are further expanded in DOD 4500.9-R, Part III Mobility (pending approval). Units using Air Force aircraft for movement do the following:

a. Provide personnel and equipment to accomplish the transportation functions for which they are responsible.

b. Establish priority and sequence for movement of troops and cargo.

c. Mark each box, item of equipment, or vehicle with accurate weight and CB.

d. Document troops and cargo on applicable manifest.

e. Inform AMC personnel of the following:

Downloaded from http://www.everyspec.com

(1) Number and type of troops to be moved.

(2) Weight, cube, and dimensions of items to be airlifted.

(3) Nomenclature of items and, where appropriate, a description of unusual cargo.

(4) Nomenclature and model number for vehicles and large pieces of equipment.

(5) Hazardous cargo to be moved.

f. Load/off-load and tie down cargo, vehicles, and equipment according to Air Force instructions under the supervision of AMC/MST personnel or aircraft loadmasters.

g. Provide shoring and dunnage as required for loading of aircraft.

h. Provide dunnage as required for ground handling of 463L pallets.

i. Assist (when requested by the AMC/MST) in installing the cargo restraint and the release/extraction systems.

j. Appoint troop commanders and cargo custodians for each mission aircraft and provide them with written instructions.

k. Provide food, billeting, and vehicle support as required by the AMC.

l. Clean equipment and vehicles. Before loading vehicle, cargo handlers should clean pallets and general cargo items of mud, insects, oil, grease, and so forth.

l6-5. LOADING UNIT'S RESPONSIBILITIES. Cargo handlers' responsibilities for loading cargo are as follows:

a. Assemble cargo and passengers for airlift.

b. Reduce vehicles and equipment for loading. Vehicles to be transported in C-141 and C-130 aircraft will be reduced in height to 102 inches or less. Vehicles with an operational height of 102 inches or less need not be reduced. The AMC/MST personnel determine loadability for items of equipment in excess of 102 inches, but less than the actual height dimensions of the aircraft.

c. Determine secondary loads. Cargo may be carried in the bed of the cargo truck under the following conditions:

(1) The maximum cross-country load capacity of the vehicle is not exceeded.

(2) The cargo can be securely restrained in the vehicle cargo bed by attaching it either to the vehicle body or chassis, or the aircraft floor.

Downloaded from http://www.everyspec.com

(3) The restraint (tie-down) criteria for the cargo are at least as stringent as for the vehicle itself.

(4) The cargo loaded in the vehicle bed does not exceed the height of the vehicle side racks.

d. Load cargo by doing the following:

(1) After the bows have been removed from the vehicle, stow them in the cargo bed. Load the secondary cargo and spread the vehicle canvas over the cargo.

(2) Secure the cargo with a 1/2-inch rope (minimum thickness) using sections of rope laced laterally and longitudinally to the outside vehicle tie-down points. Ensure that the ropes contact the cargo, and not just hold the side racks down.

e. Accurately determine the weight of the vehicle plus the weight of any cargo on the vehicle. After any secondary load has been secured in the cargo bed, weigh the vehicle and compute the vehicle CB according to the procedures outlined in Chapter 17.

f. Assemble palletized cargo according to FM 55-9. Pallet weights must not exceed aircraft limitations, and height and shapes must conform to the type of aircraft used. Nets must be serviceable and properly installed. (See FM 55-9, Chapter 2.)

16-6. HAZARDOUS CARGO. All hazardous cargo to be airlifted must be identified, packaged, handled, and certified in strict compliance with TM 38-250.

16-7. TROOP COMMANDER'S RESPONSIBILITIES. The senior individual in each aircraft load of troops is appointed as troop commander and receives a copy of the passenger manifest. Terminal operations personnel will brief troop commanders thoroughly on their responsibilities. An example of troop commander duties follows:

a. Selection of a troop commander for an aircraft load of passengers ensures proper passenger processing. Prompt execution of assigned duties reduces confusion and assists the dispatch and successful completion of the flight.

b. A troop commander's specific responsibilities are as follows:

(1) To be present at the passenger briefing for the flight.

(2) To assume control of all passengers listed for movement on the flight and inform them of formations, expected departure, and reporting time.

(3) To be readily available to the UMO at all times. Personnel will not be dismissed without the approval of the UMO.

(4) To check roll prior to loading to make sure everyone is present for the flight. Report no-show passengers to the UMO so that standby passengers may be selected to complete the load.

Downloaded from http://www.everyspec.com

NOTE: Coordinate time for the roll check with the UMO.

(5) To make sure passengers have placed their baggage on the proper vehicle for transport to the aircraft, or turned in for palletizing on a 463L pallet.

(6) To check the loading of passengers to ensure that each individual appearing on the manifest is aboard.

(7) To maintain aircraft load and troop commander's itinerary.

(8) To brief all passengers on maintaining security of their personal belongings. Make sure that any passenger removed from a flight also has his baggage removed. Conduct an antihijack inspection of all assigned troops and certify this action on DD Form 2131, block 6 of the (Passenger/Cargo Manifest). Keep one copy of DD Form 2131 for the deploying unit's records and send one copy to the AACG.

(9) To collect all clips and ammunition, keep these items in custody during flight, and reissue them as required en route or at destination.

(10) To maintain in-flight discipline of all passengers.

(11) To control the issue of in-flight rations to the troops.

(12) To help maintain clean and safe conditions in the aircraft.

(13) To determine ground time from the loadmaster at en route stations and to ensure that all passengers are present if necessary. If passengers are off-loaded, or other personnel are added to the manifest at an intermediate stop, notify the departure airfield by operational immediate message. Any change to the manifest will be explained in the "reason" portion of the form. The final destination base will be included as an information addressee unless the destination is classified. Before departure from the en route station, conduct another antihijack inspection.

(14) To brief passengers on load restrictions and conduct at en route stops. Some stations may restrict passengers to the base area because of local conditions. The TALCE representative meeting the aircraft will report pertinent local conditions.

(15) To help the aircraft commander get billeting and messing for the aircraft passengers if weather causes landing at off-route bases.

(16) To maintain an orderly dispatch of the passengers and determine if they need to assist with the off-loading of baggage or cargo on arrival.

(17) To designate a guard for personal effects or other equipment that must remain in the cabin of the aircraft during en route servicing stops. If necessary, use two individuals to perform guard duty on an alternate basis. If en route military bases do not arrange to provide hot meals for the security guards, ask the base to provide acceptable security. Arrange for security coverage through base facilities when unusually long delays are encountered.

Downloaded from http://www.everyspec.com

16-8. SAFETY. Safety is the paramount consideration in any airlift movement. Injury to personnel or damage to equipment or aircraft inhibits efficient mission accomplishment. All personnel must be briefed on the importance of safe practices on the flight line and around the aircraft.

a. **Flight Line Safety.** Flight personnel must adhere to the following requirements and restrictions:

(1) Do not smoke on the flight line.

(2) Do not sit or lie on the aircraft parking ramp.

(3) Stay away from the aircraft engines and APU exhaust (Figure 16-6, page 16-12) when they are in operation.

NOTE: Vehicles equipped with diesel engines will have transmission in neutral. If the driver must dismount, chocks will be used.

(4) Place vehicles equipped with automatic transmission in park position. When vehicles are parked between sundown and sunup, parking lights must be on.

(5) Wait in the marshaling area if not specifically assigned a job at the aircraft.

(6) Use ear protection when working around aircraft.

(7) Observe posted speed limits (AMC Pamphlet 36-1).

(a) Aircraft parking ramp--15 miles per hour.

(b) Within 25 feet of aircraft--5 miles per hour.

(c) Inside the aircraft--extremely slow and cautious.

(8) Do not drive a vehicle under any part of the aircraft or between the wing tips of parked aircraft.

b. **Loading Safety.** Personnel will adhere to the following requirements and restrictions when loading aircraft:

(1) Do not back a vehicle toward or into an aircraft until both front and rear spotters are in place. Drivers will then proceed only under direction of a guide.

(2) Do not stand or walk in, front of or behind vehicles that are being loaded or off-loaded.

(3) Only one person will provide signal guidance for vehicle operations while vehicles are being loaded or off-loaded from the aircraft.

Downloaded from http://www.everyspec.com

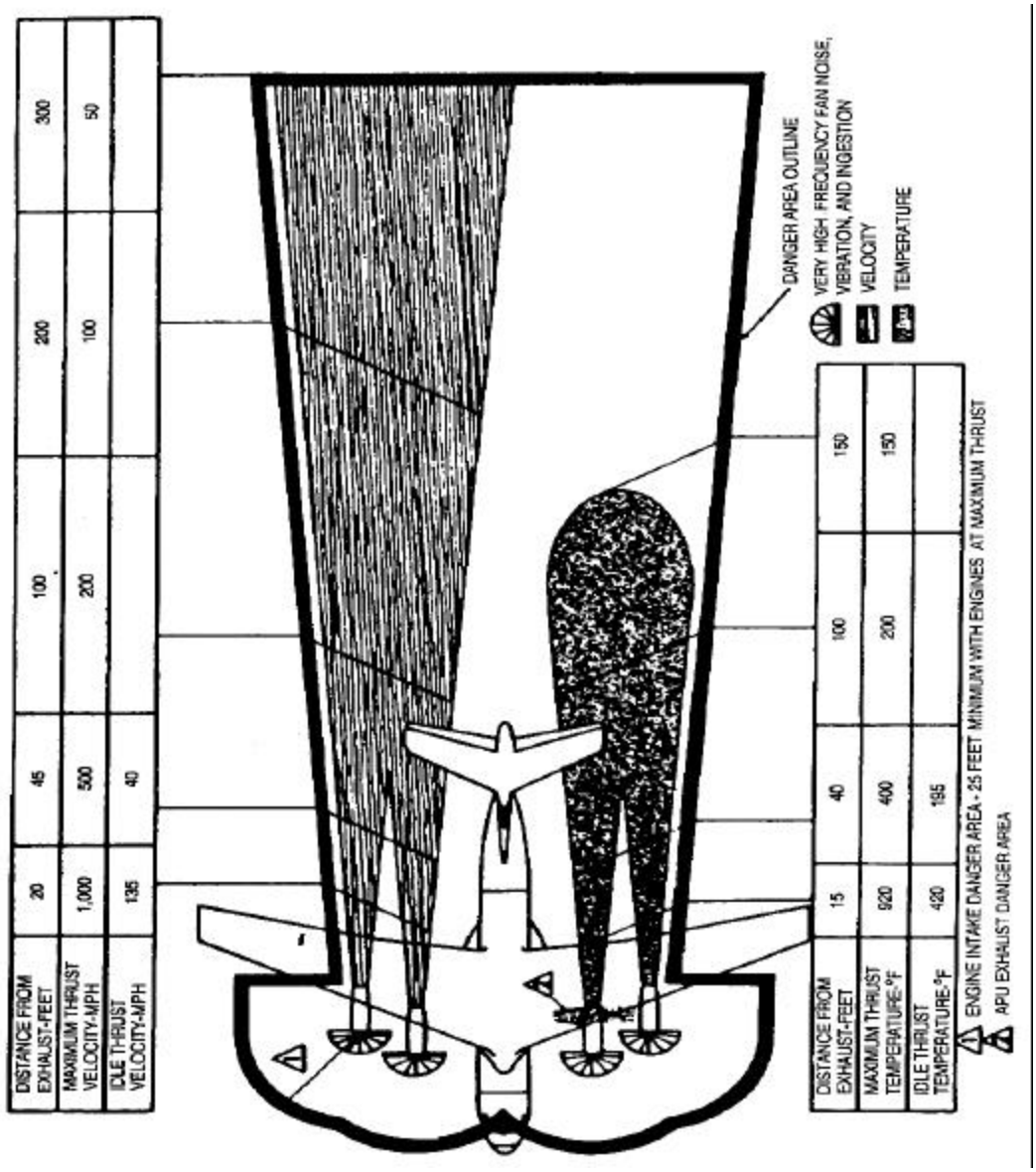

Figure 16-6. Danger areas – engines and APU

(4) Personnel will ensure all safety chains and pintle hook pins are installed on vehicles towing trailers. Personnel must check the security of trailer third wheels before loading or off-loading them.

(5) Vehicles are not allowed within the circle of safety (see Figure 16-7) unless they are to be loaded aboard or used to service the aircraft. All vehicles must approach the aircraft so the driver's side is toward the aircraft. Personnel will park the vehicle parallel to the wing axis, with ignition off, key left in the lock, parking brake set, and the transmission placed in low gear.

Downloaded from http://www.everyspec.com

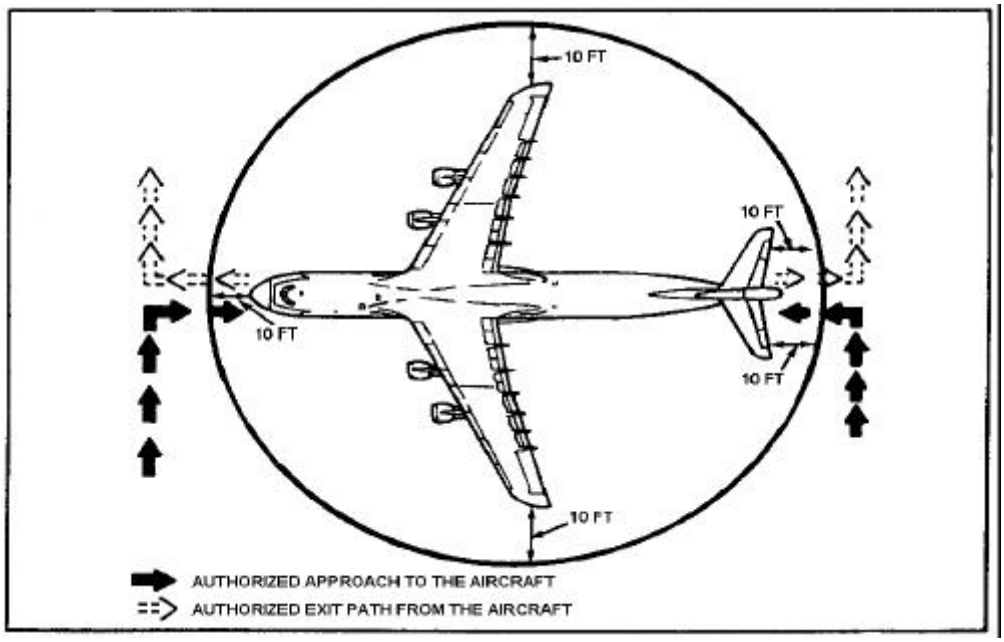

Figure 16-7. Circle of safety

(6) Do not leave vehicles unattended on the cargo floor unless providing a minimum of one chain forward and aft restraint.

(7) Do not wear rings or watches while serving on loading/off-loading teams.

(8) Do not throw any equipment (tie-down chains, chocks, wrenches) about the aircraft.

(9) Load team member will wear gloves.

c. **Off-loading and Destination Safety.** Personnel will adhere to the following requirements and restrictions:

(1) Do not remove restraint devices or start vehicles until told to do so by the aircraft loadmaster.

(2) Ensure passengers exit aircraft before vehicles are off-loaded.

(3) Move only in a direction straight away from the front (C-5) or rear (C-130, C-141B, C-17, or C-5) of the aircraft, at least 50 feet (150 feet for the C-5) before turning right or left. Also, move at least 300 feet from the turning point of the aircraft before stopping.

Downloaded from http://www.everyspec.com

CHAPTER 17

DETERMINATION OF CENTER OF BALANCE AND CENTER OF GRAVITY

Section I. Center of Balance (Vehicles and General Cargo)

17-1. INTRODUCTION. To correctly plan an airlift and to segregate loads for specific aircraft, it is necessary to determine the weight and CB of cargo units. Section I discusses the procedures used to determine the weight and CB of vehicles and general cargo. Section II discusses determining an aircraft's CG. The accuracy of weight and balance computation is as important to flight safety as proper maintenance.

17-2. VEHICLE MEASUREMENTS. Vehicle measurements are found on the manufacturer's data plate on M-series vehicles. Where measurements are not available, vehicles are measured at specific points (Figure 17-1). However, data plate weights are not used for airlift purposes.

NOTE: The individual axle weight must be marked above each axle.

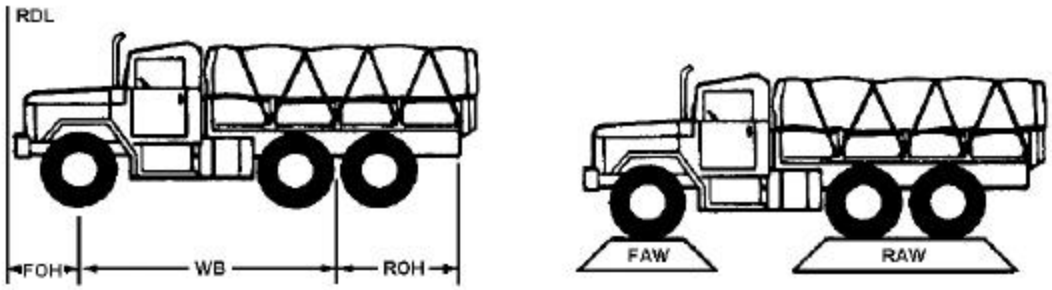

Figure 17-1. Vehicle measurement points

a. If scales are not available to the unit commander, the method of determining weights will be resolved at the joint planning conference.

b. Figure 17-1 shows the vehicle measurement points that must be used to calculate the CB of a vehicle. The acronyms and terms used in Figure 17-1 and elsewhere to compute CB are as follows:

- FOH - (front overhang) distance in inches from front bumper to center of front axle.
- WB - (wheel base) distance in inches from center of front axle to center of rear axle or center of tandem axles.
- ROH - (rear overhang) distance from rear axle or center of tandem axles to rear bumper.
- FAW - front axle weight in pounds.
- RAW - rear axle weight in pounds.

Downloaded from http://www.everyspec.com

- GW - gross weight in pounds.
- RDL - (reference datum line) a predetermined point from which all measurements are taken.
- MOMENT - the product obtained by multiplying the weight by the distance in inches from the RDL.

17-3. WEIGHT AND CENTER OF BALANCE. The CB of cargo items must be determined before the weight and balance of a loaded aircraft can be computed.

a. The shipping agency must mark each item of cargo with the correct gross weight and a CB point. Mark all items measuring 20 feet or longer and those having a balance point other than at its center. In addition, mark vehicles having a load-carrying capability to show an empty or loaded CB, as appropriate. Also, if trucks and towed equipment are to be transported coupled, a combined CB will be computed and marked on the appropriate vehicle.

b. Determine the weight and CB of a vehicle after all secondary cargo is secured, ready for airlift. The total weight of the secondary cargo must be included in the total vehicle weight. Nothing can be added to or removed from a vehicle that has been weighed and marked unless it is reweighed.

(1) Compute the CB location of vehicles using this formula: Multiply weight by distance (in inches) of each axle from the reference line, then divide the total results by the vehicle gross weight. The resulting figure is the number of inches to be measured aft from the reference line to the CB of the vehicle.

$$\text{Formula: } \frac{(W1 \times D1) + (W2 \times D2) = C}{\text{Gross Weight}}$$

W1 = front axle weight
W2 = rear axle weight
D1 = distance from RDL to front axle
D2 = distance from RDL to rear axle

(2) The vehicle CB is computed to the nearest whole inch. Any answer that has a fraction of .5 or higher is increased to the next higher number, if .4 or less the number is dropped.

(3) After computing the vehicle CB, mark both sides of the vehicle with masking tape to form the letter "T." Use a grease pencil or magic marker to write the gross weight in the crossbar of the "T." Write "CB" in the vertical bar to mark the exact CB position (see Figure 17-2). Mark axle weights above each axle.

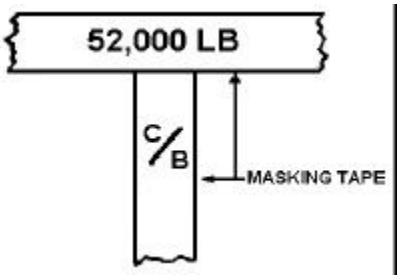

Figure 17-2. Center of balance

Downloaded from http://www.everyspec.com

marker

(4) The following illustrations show examples of methods used to determine the weight and CB location of typical cargo units. These cargo units include general cargo, large or skid-mounted cargo, track-type vehicles, and single- and multiple-axle vehicles.

EXAMPLE 1 – Vehicles.

STEP 1. Determine front and rear axle weights.

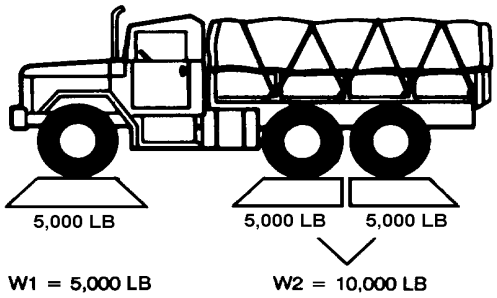

STEP 2. Determine distance from the front and rear axles to the RDL.

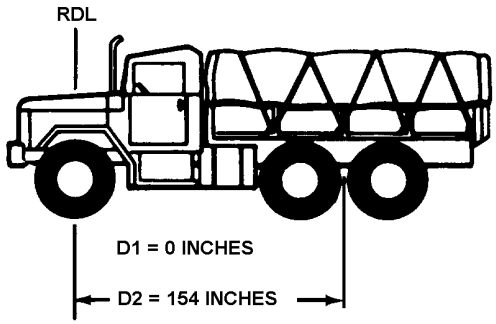

STEP 3. Enter the information obtained in steps 1 and 2 into the formula.

$$\frac{(W1 \times D1) + (W2 \times D2)}{\text{Gross Weight}} = CB$$

(CB = distance in inches to be measured aft from the RDL which gives the center of balance.)

$$\frac{(5{,}000 \times 60) + (10{,}000 \times 180)}{5{,}000} =$$

$$\frac{300{,}000 + 1{,}800{,}000}{} =$$

Downloaded from http://www.everyspec.com

15,000

STEP 4. Divide the total moment by the gross weight. This final result (140 inches) is the CB of the vehicle measured from the front end (reference data line).

$$\frac{2{,}100{,}000}{15{,}000} = 140 \text{ inches from the RDL gives the CB}$$

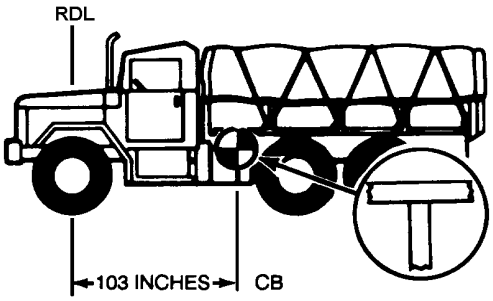

EXAMPLE 2 – Trailers. The same idea is used in determining the CB for a trailer as was used for the truck in Example 1. The main difference is that the tongue is weighed as the front axle, and the actual axle is weighed as the rear axle.

STEP 1. Weigh tongue and axle.

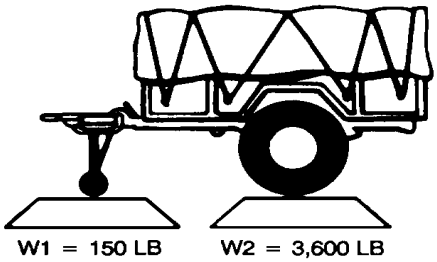

STEP 2. Measure the distance from the end of the tongue to the center of the axle.

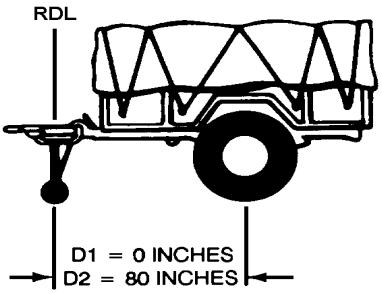

Downloaded from http://www.everyspec.com

STEP 3. Enter the weights.

$$\frac{(W1 \times D1) + (W2 \times D2)}{\text{Gross Weight}} = CB$$

$$\frac{(150 \times 1) + (3{,}600 \times 80)}{3{,}750} =$$

$$\frac{(150 + 288{,}000)}{3{,}750} =$$

$$\frac{288{,}150}{3{,}750} = 76.84$$

STEP 4. Now measure 77 inches from the tongue aft to obtain the CB on the trailer.

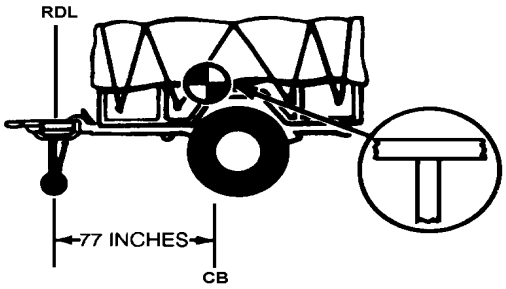

EXAMPLE 3 – Multi-axle vehicles. To determine the CB for a multi-axle vehicle such as the one shown here, weigh each axle as in step 1 in the first example, then measure the distance from the RDL to each axle as was done in step 2 before.

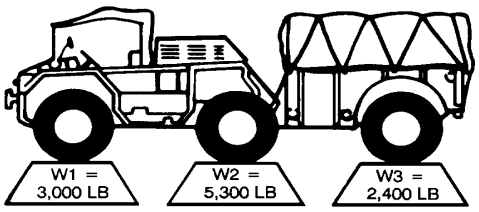

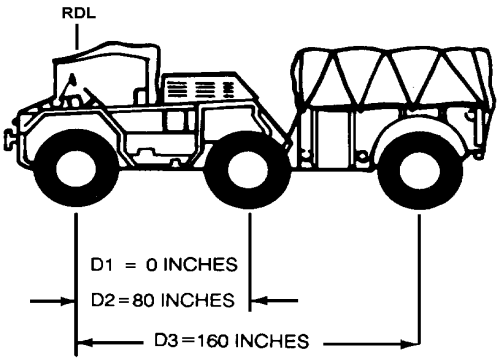

$$\frac{(W1 \times D1) + (W2 \times D2) + (W3 \times D3)}{\text{Gross Weight}} = CB$$

Downloaded from http://www.everyspec.com

(CB = distance in inches to be measured aft from the RDL which gives the center of balance.)

STEP 3. Now as before, enter the information obtained in steps 1 and 2 into the formula.

$$\frac{(3{,}000 \times 24) + (5{,}300 \times 104) + (2{,}400 \times 184)}{10{,}700} =$$

(moment)

$$\frac{72{,}000 + 551{,}200 + 441{,}600}{10{,}700} = \frac{1{,}064{,}800}{10{,}700}$$

STEP 4. Divide the total moment by the total weight.

$\frac{1{,}064{,}800}{10{,}700}$ = 99.4 inches from the RDL gives the location of the CB

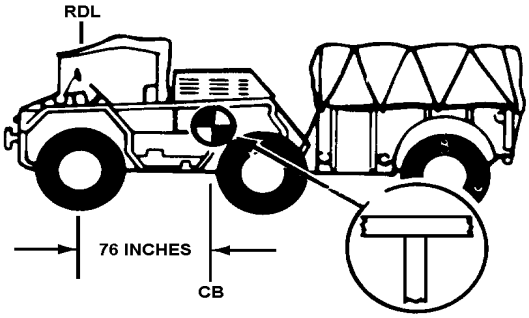

EXAMPLE 4 – Tracked vehicles.

STEP 1. To determine weight, drive the vehicle onto a platform scale (for example, truck scale, coal yard scale) large enough to accommodate the entire vehicle. Record weight.

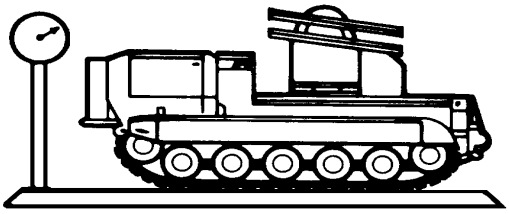

Downloaded from http://www.everyspec.com

STEP 2. To determine CB, drive the vehicle onto a wooden beam or pole until it tilts forward. Mark the side of the vehicle at the point of tilt.

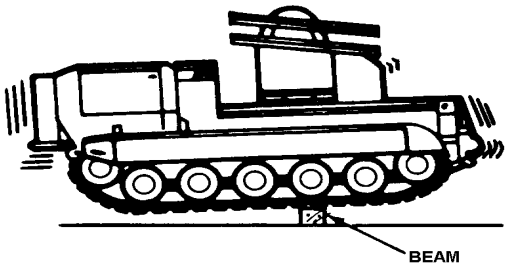

STEP 3. With appropriate materials, mark the CB and gross weight of the vehicle.

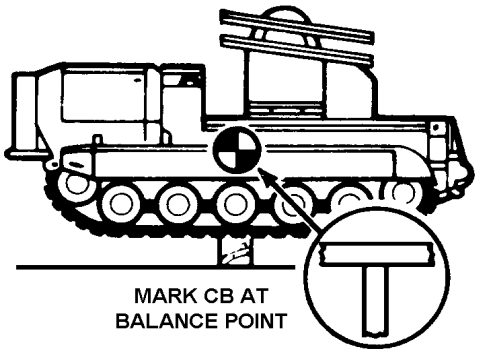

EXAMPLE 5 –- Skid-mounted cargo.

STEP 1. If the skid-mounted cargo will fit on the scale, weigh the whole load to use as the weight figure.

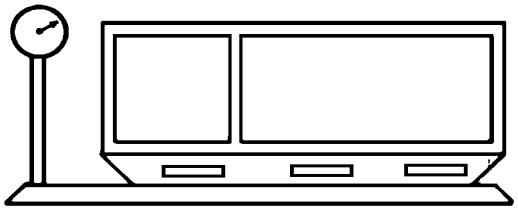

Downloaded from http://www.everyspec.com

STEP 2. Determine the CB by placing that load onto a pipe and centering the cargo until it balances, then marking the CB.

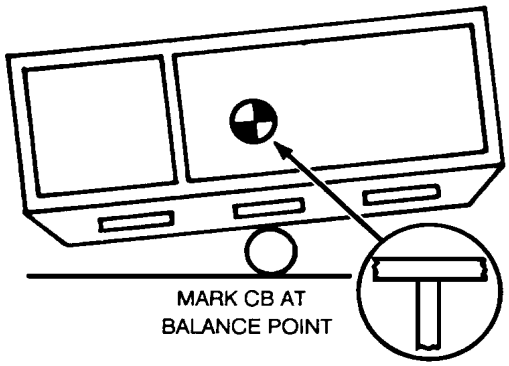

EXAMPLE 6 – Skid-mounted cargo. If the skid-mounted cargo is too large to fit on the scale at one time it will have to be weighed and measured as in examples 1 and 2, using the same formula.

$$\frac{(W1 \times D1) + (W2 \times D2)}{\text{Gross Weight}} = CB$$

NOTE: The points to use as the axles should be support braces between the skids, as shown here.

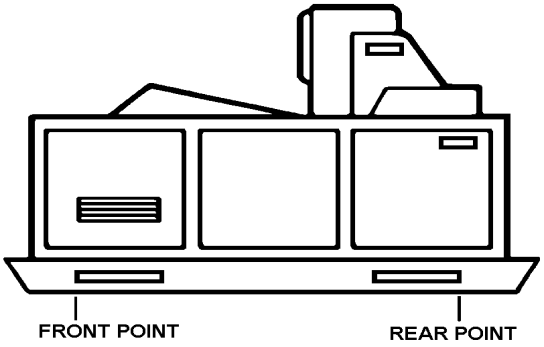

Now go through steps 1 through 3 as before in examples 1 and 2.

Downloaded from http://www.everyspec.com

STEP 1. Support the overhang at the same height as the scale with a block of wood.

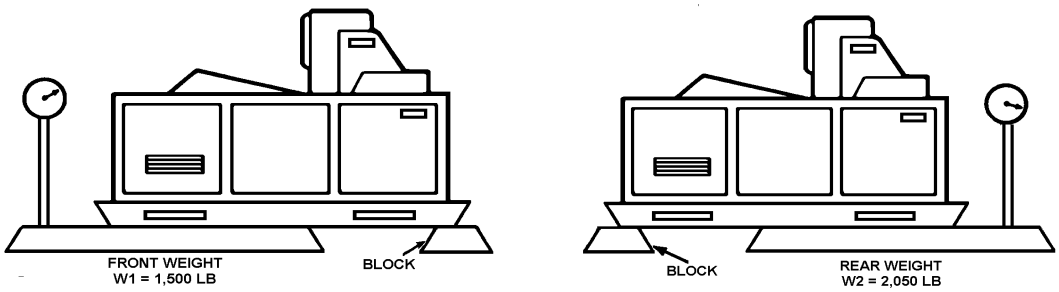

STEP 2. Measure the distance from the RDL to the front and rear points of support (same as axles).

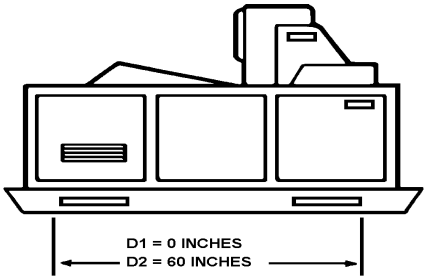

STEP 3. Again enter the information obtained in steps 1 and 2 into the formula.

$$\frac{(S1 \times D1) + (S2 \times D2)}{\text{Gross Weight}} =$$

$$\frac{(1{,}500 \times 40) + (2{,}050 \times 110)}{3{,}550} =$$

$$\frac{75{,}000 + 225{,}500}{3{,}550} = \frac{300{,}500}{3{,}550} = 84.6 \text{ or } 85 \text{ inches aft from the RDL}$$

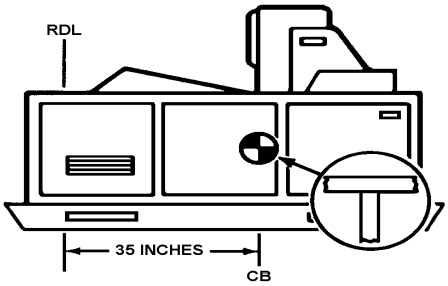

Downloaded from http://www.everyspec.com

Section II. Aircraft Center of Gravity (Weight and Balance)

17-4. CENTER OF GRAVITY. The maximum weight that can be carried on any specific mission is limited by the maximum allowable gross weight and is dependent upon the aircraft's basic weight, number of crew, and the amount of fuel and oil aboard the aircraft. The flight performance of the aircraft depends on the CG location. If the CG is too far out of position, the aircraft will not fly. As fuel, oil, cargo, and other weights are added, removed burned off, or relocated within the aircraft, the aircraft CG changes. The aircraft is designed to permit such changes provided the CG location remains within certain specified limits.

17-5. WEIGHT AND BALANCE. To understand aircraft methods of weight and balance, personnel must know how and where to find the RDL and aircraft station as indicated below.

- The RDL is at or near the aircraft nose and is the point of an aircraft from which all longitudinal measurements are made. The RDL always is fuselage station O.
- Aircraft stations, sometimes called fuselage stations, are measurements in inches aft of the RDL and are usually identified by a number on the wall of the aircraft. For example, station 520 in the aircraft is a point 520 inches aft of the RDL. These measurements or distances are used for determining the location of cargo in the aircraft and for computation of the aircraft CG. See Figure 17-3 for a diagram showing aircraft station/arm measurements.

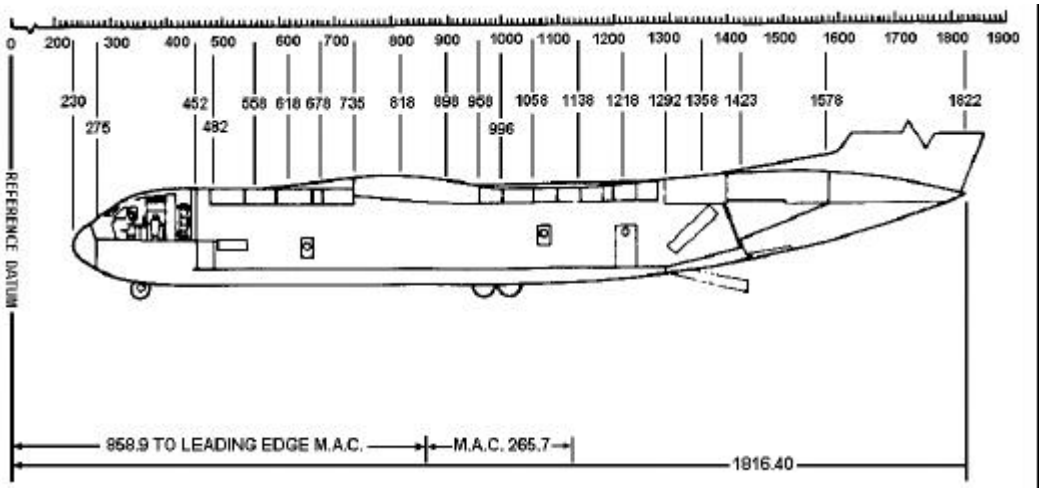

Figure 17-3. Airplane diagram (station/arm)

- Arm is the horizontal distance in inches from the RDL to the center of gravity of an object.
- Moment is the product of the weight of an item multiplied by its arm. Moment may be expressed in pound-inches; for example, 2 pounds (weight) x 10 inches (arm) = 20 pound-inches (moment). For instance, in Figure 17-4 you see a board perfectly balanced with a 20-pound weight on one end and a 40-pound weight on the other. To understand how this is possible, you must learn the meaning of an inch-pound or moment. A moment is the product obtained when the distance (arm) is multiplied by the weight. For the board to balance, the weights placed on each side of the fulcrum must create an equal number of moments. If the 20-pound weight is paced 60

Downloaded from http://www.everyspec.com

inches from the fulcrum on one end of the board, it creates 1,200 moments; consequently, the 40-pound weight is placed only 30 inches from the fulcrum on the other end to create the same number of moments and balance the board.

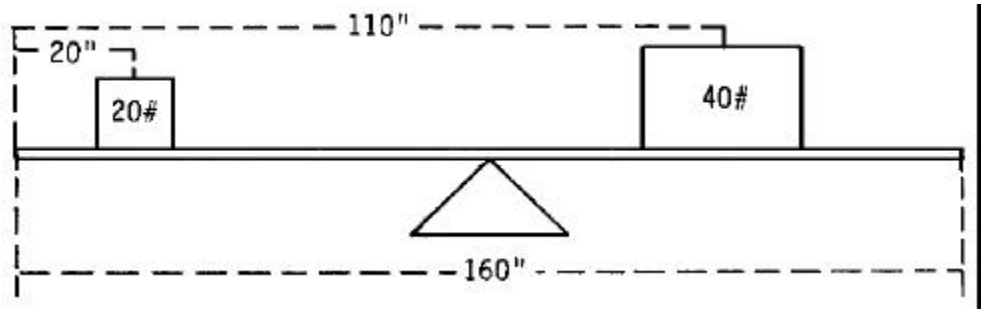

Figure 17-4. Achieving moment of balance

a. The only way to assure an aircraft is safely balanced is to know how to find the CG of the aircraft and load.

b. Figure 17-5, page 17-12 helps illustrate the procedure used in computing aircraft and load CG. The reference line (same as aircraft RDL) is at the end of the board. For instance—

The CB of the 20-pound box is located 20 inches from the end of the board. The 40-pound box is located 110 inches from the end of the board.

The following formula is used:

$$\frac{(W1 \times D1) + (W2 \times D2)}{\text{Gross Weight}} = CG$$

W x D = M

20 x 20 = 400

$$\frac{40}{60} \times \frac{110}{\times} = \frac{4,400}{4,800}$$

4,800 ÷ 60 = 80 CG = 80 inches

Therefore, CG is located 80 inches from the end of board (at the fulcrum).

c. An empty aircraft always is in balance, regardless of the amount of fuel aboard. Only when a load is added does the weight and balance become a concern. Each aircraft has a specified forward and aft limitation that must be maintained to ensure the aircraft is safely balanced for flight. These limits vary according to the gross weight of the aircraft. The only way to ensure an aircraft is safety balanced is to know how to find the CG of a load and to determine that it will fall in the proper location on the aircraft.

Downloaded from http://www.everyspec.com

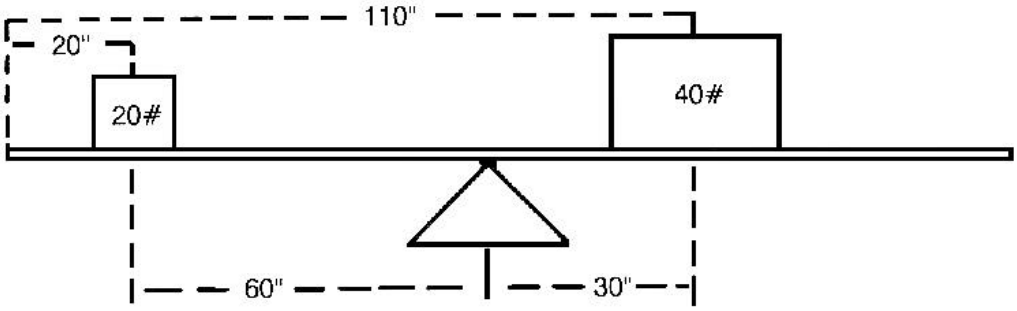

Figure 17-5. Computing aircraft and load CG

Downloaded from http://www.everyspec.com

CHAPTER 18

463L PALLETS AND SHORING

18-1. INTRODUCTION. The Air Force devised a cargo handling system, called the 463L System that reduces aircraft ground time, loads aircraft more fully, and eases the ground handling of cargo. One of the key items is the master pallet (463L pallet), which then turned sideways fits on the rollers of the C-130 and C-141 aircraft, and when turned lengthwise, fits on the bed of a truck. Combining the 463L vehicles, pallets, rollers, and rails within the aircraft, can reduce ground time by as much as 75 percent. This chapter also discusses types of shoring and how, when, and where it will be used in loading cargo aboard aircraft.

18-2. CONSTRUCTION OF 463L PALLETS. The 463L pallet dimensions are 108 inches by 88 inches by 2 1/4 inches. It weighs 337 pounds and has a total load capacity of 10,000 pounds. The desired load capacity is 7,500 pounds. The pallet has a balsa wood core, and is covered with corrosion-resistant aluminum. It is framed on all sides by aluminum rails which have 22 tie-down rings attached with six rings on each of the long sides and five rings on each of the short sides. The rails also have indents (notches) which can accept rail locks when the pallet is put on an aircraft (Figure 18-1). The C-130 and C-141 aircraft are fitted with a dual-rail system. The rails are fitted with detents (rail locks) to lock the pallet in place. These detents prevent forward and aft movement of the pallets while the aircraft is in flight. The usable dimensions of the 463L pallet are 104 inches by 84 inches. Four inches around the pallet are used to secure the straps, nets, or chains.

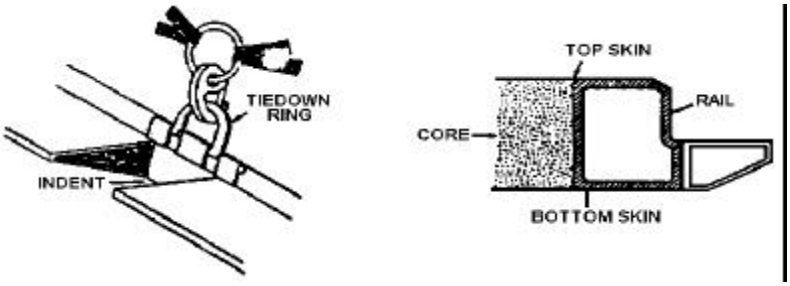

Figure 18-1. View of rails and indent on 463L pallet

18-3. LOADING CARGO ON A 463L PALLET. Cargo handlers will take the following steps and precautions when loading the pallet—

a. Use blocking under the pallet. Lay three blocks the length of the pallet.

b. Use dunnage between the pallet and cargo with sharp edges.

c. Palletize cargo from the heaviest to the lightest items. The lighter and smaller items should be placed on the top or along the sides of the heavier cargo.

d. Place containers marked "This Side Up" upright, and labeled cargo with their labels faced out.

Downloaded from http://www.everyspec.com

e. Distribute large and heavy items evenly from the center out (Figure 18-2) to prevent the pallet from being heavy ended.

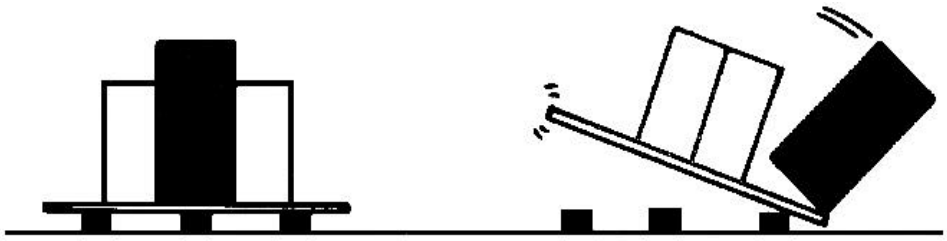

Figure 18-2. Weight distribution

f. Build the load in a square or pyramid shape (Figure 18-3) to make the load stable and easier to handle. It is then easier to secure the cargo to the pallet.

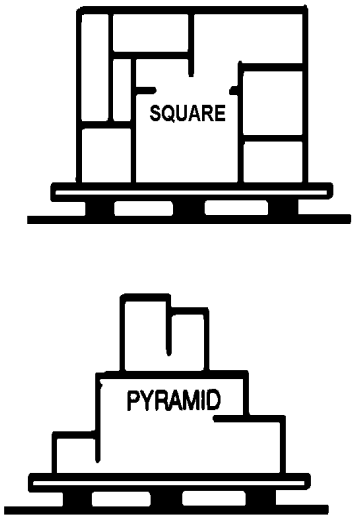

Figure 18-3. Shape of loads

g. Use a pallet template or measuring stick to ensure that the height restrictions are not exceeded. The maximum height allowed is 96 inches except for 76 inches used in restricted areas.

h. Use care when loading cargo using MHE, especially when using forklifts with bare tines.

i. Use at least two attaching points when winching (pulling) a pallet.

NOTE: Never push or slide a pallet across concrete floors or ramp surfaces. This will damage the bottom skin of the pallet.

Downloaded from http://www.everyspec.com

18-4. SECURING CARGO TO THE PALLET. When securing cargo to the pallet, the following procedures apply.

a. **Cargo Nets.** Three nets make up a set. Two side nets are attached to the rings on the pallets and go around the sides of the load, and a top net goes over the top of the cargo.

(1) The top net is attached to the side nets by hooks and rings. The nets have many adjustment points and can be made to fit any load.

(2) A set of large 463L pallet nets has a maximum capacity of 10,000 pounds at 8 Gs when properly installed.

NOTE: When more than 5,500 pounds of cargo are loaded on a pallet, use two sets of side nets.

b. **Procedure for Netting Pallets.** Personnel should follow these steps for netting pallets:

NOTE: Before netting the cargo to the pallet, cover the pallet with plastic pallet covers.

➢ *Step 1.* Lay the nets on the floor, untangle them, and inspect for missing attachments (hooks and straps).

➢ *Step 2.* Start with the left ring side of the numbers 26 through 30 (see Figure 18-4). Attach hook 1 on the side of the net to ring 1 on the pallet.

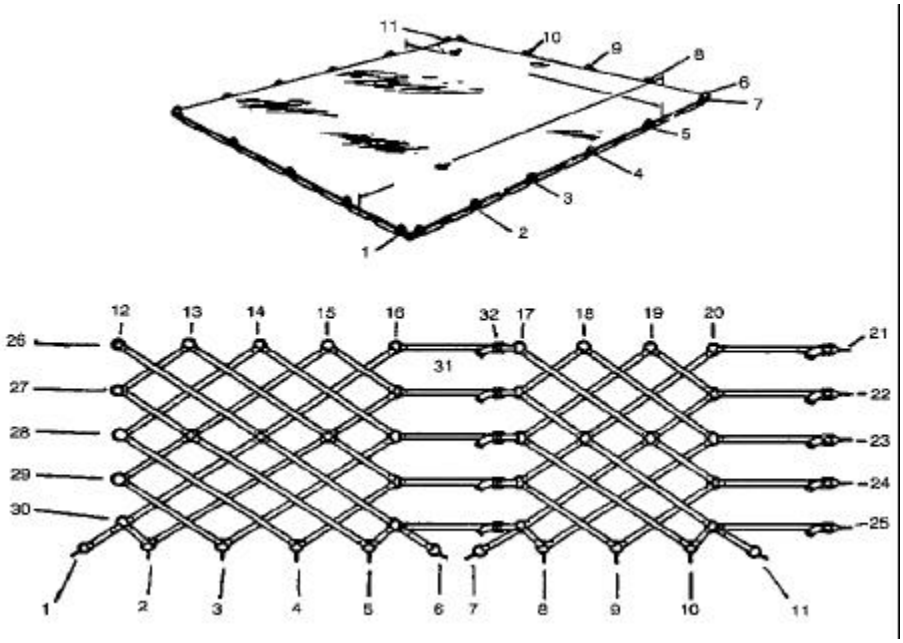

Figure 18-4. Side netting procedures

➢ *Step 3.* Continue hooking up the side net (numbers 2 through 11).

Downloaded from http://www.everyspec.com

NOTE: Always start on the long side of the pallet and work from left to right.

➢ *Step 4.* Attach the other side net on the other two sides of the pallet (follow same procedure as steps 2 and 3).

➢ *Step 5.* After both side nets are attached, lift strap 31 of both nets over the corner of the cargo on the pallet. This strap is adjustable at point 32.

➢ *Step 6.* Attach adjustable hook 21 to ring 26 of the opposite net. Lift straps just attached over the corner of the cargo in the same manner as in step 5.

➢ *Step 7.* Continue hooking ring 22 to ring 27, ring 23 to ring 28, ring 24 to ring 29, and ring 25 to ring 30. Work from the top down.

➢ *Step 8.* After the side nets are attached and adjusted, place the top net over the pallet. The sides of the net with five straps (A through E) are placed on the long side of the pallet.

➢ *Step 9.* Attach A to 12, B to 13, C to 14, D to 15, E to 16, F to 17, G to 18, H to 19, and I to 20.

➢ *Step 10.* Finish attaching the rest of the top net to the other side net in the same manner as in step 9 (Figure 18-5).

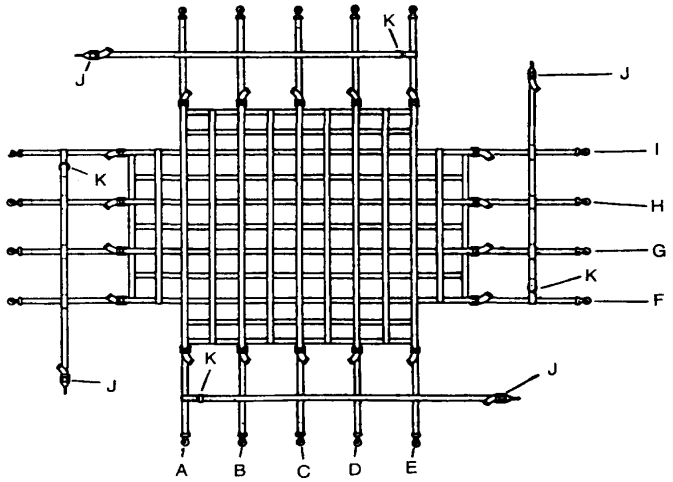

Figure 18-5. Top netting procedures

➢ *Step 11.* Tighten all the nets.

➢ *Step 12.* Attach the 4 J hooks to the 4 K rings. These straps go around the corner of the cargo on the pallet.

➢ *Step 13.* Secure the ends of the straps; tuck them in to ensure that they will not get caught in the rail system when loading the pallet aboard the aircraft (Figure 18-6).

Downloaded from http://www.everyspec.com

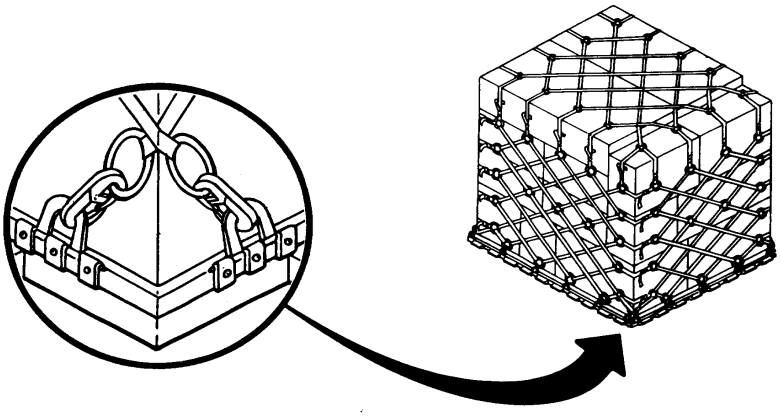

Figure 18-6. Typical net attachment

- *Step 14*. Attach the pallet documentation to the net.

18-5. MULTI-PALLETIZATION. When shipping cargo that exceeds the dimensions of the 463L pallet, two or more pallets may be joined together. This is referred to as marrying the pallets. When two pallets are married, they are referred to as a double pallet or a two-pallet train. The same applies to three, four, or five pallets married together.

a. **Inspect the Pallet.** Before pallets can be married, personnel must inspect them on the top, bottom, and sides to ensure that they are in good condition. The tops and bottoms should be clean and in good repair. The side rails should not be bowed, and the tie-down rings should be securely mounted.

b. **Marry the Pallets.** After the pallets have been inspected and accepted, they can be married. Place the pallets on the cargo loading dock (Figure 18-7) so that the intents and detents on the long side of the pallets are aligned.

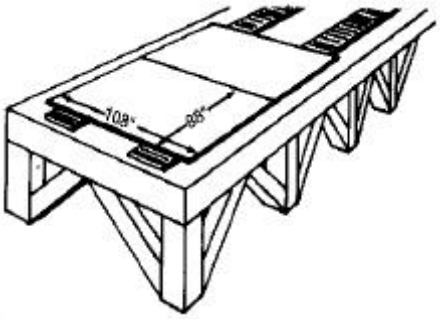

Figure 18-7. Loading dock

Downloaded from http://www.everyspec.com

(1) ***Placement of spacers.*** Once the pallets are aligned, put spacers between the pallets (Figure 18-8) between the two ends in the indents and detents. Use at least two spacers between the pallets being married; use more if necessary. The spacers keep the pallets in line and properly spaced so that they will lock into the rail system of the aircraft (Figure 18-9).

NOTE: Spacers are locally manufactured out of two pieces of 3/4-inch plywood.

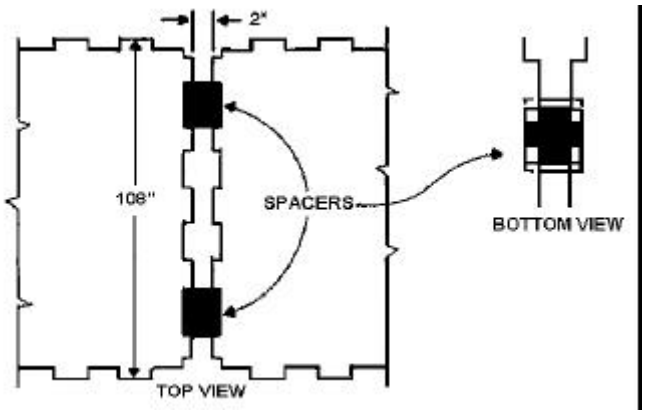

Figure 18-8. Use of spacers

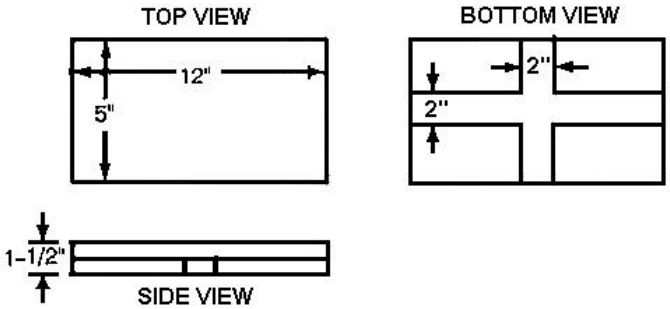

Figure 18-9. Sampler spacer

(2) ***Securing the pallets together.*** Use tie-down devices to chain pallets together. Figure 18-10 shows two methods of marrying pallets. These devices are available in the unit.

c. **Loading Cargo on Married Pallets.** Long heavy cargo is loaded first and distributed over the pallets to prevent them from becoming heavy ended. Light cargo is stacked on top and along the sides of the heavy cargo. If cargo is labeled, make certain that the labels face out and are visible. Figure 18-11 shows the proper use of pallet barriers.

(1) ***Weight distribution.*** Distribute the weight evenly over all the pallets. Never exceed the dimensions and weight limits for the designated aircraft.

Downloaded from http://www.everyspec.com

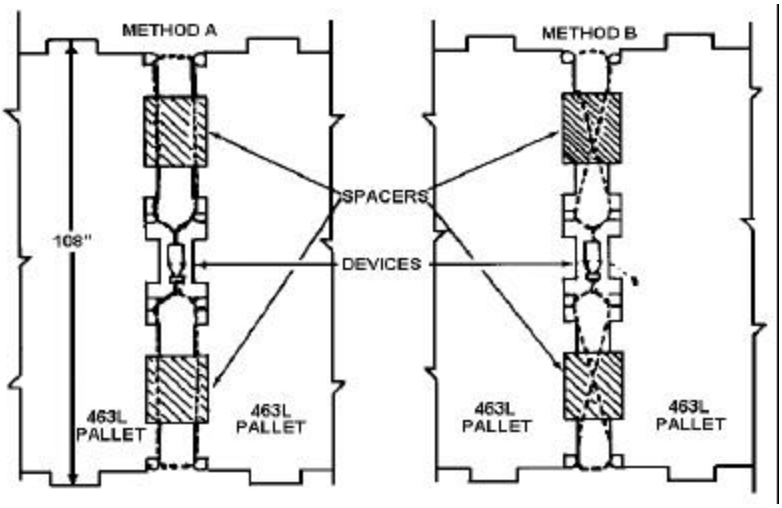

Figure 18-10. Methods of marrying pallets

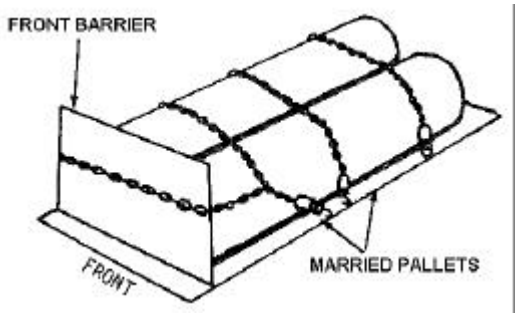

Figure 18-11. Pallet barrier

(2) ***Accountability.*** Tally each item as it is loaded on the pallet. Make sure that the tally sheets indicate that the pallet is married. Attach one copy of the tally sheet to the cargo.

d. **Tie-Down Techniques.** Some of the key techniques of tying down large items are as follows:

(1) Use a front barrier or buffer board and a chain gate for loose heavy cargo, such as helicopter blades or tent poles.

(2) Use chain and devices for large items such as canned engines and wheeled equipment. Never put more than 50 percent of the tie-downs on axles of wheeled equipment.

(3) Use 463L nets for loose or light items such as small boxes.

Downloaded from http://www.everyspec.com

(4) Always use a chain gate (Figure 18-12) for heavy items such as large cases or reels.

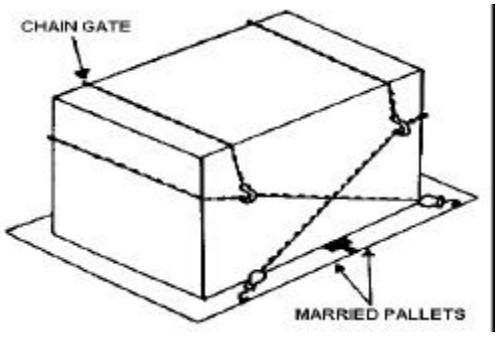

Figure 18-12. Chain gate

18-6. STORAGE OF 463L PALLETS AND NETS. With reasonable care and protection, the 463L pallet and their cargo nets should last indefinitely. Good supervision ensures that adequate care is taken in handling and storing pallets and nets.

a. **Storage of pallets.** Personnel should follow these steps:

(1) Clean each pallet before it is stored.

(2) Inspect the top and bottom of each pallet.

NOTE: Pallets with dents, gouges, or scratches that do not fracture the skin can be kept and stored. If the pallet has bent rails, missing tie-down rings, or holes, or if the metal skin is peeling, turn it in for repair.

(3) Stack pallets topside up. If pallets are stacked upside down, the tie-down rings will be damaged and the skin will be torn.

(4) Stack pallets 40 feet high, with three pieces of dunnage between each group of 10 pallets.

b. **Storage of cargo nets.** Personnel should follow these steps:

(1) Lay out each set of nets and inspect for breaks in the webbing or straps, tears where the webbing is sewn, or missing rings, hooks, or attachments.

NOTE: If you reject one of the nets for damage, send the complete set in for maintenance and repair.

(2) Clean and dry the nets before they are stored.

Downloaded from http://www.everyspec.com

(3) Lay out the two side nets and the top net. Fold them, and then secure the three nets together.

(4) Stack and store the nets in sets in a dry and well-ventilated storage area.

18-7. CH-47 HICHS. General information and the loading methods of this system are discussed below.

a. **General.** The HICHS is a cargo-handling system that provides low friction load/unload conveyor ramps. It also includes conveyors for moving cargo within the aircraft. Figure 18-13 shows the HICHS installed in a CH-47 helicopter. The total weight of the HICHS is 825 pounds. The HICHS consists of three sections (see Figure 18-14, page 18-10).

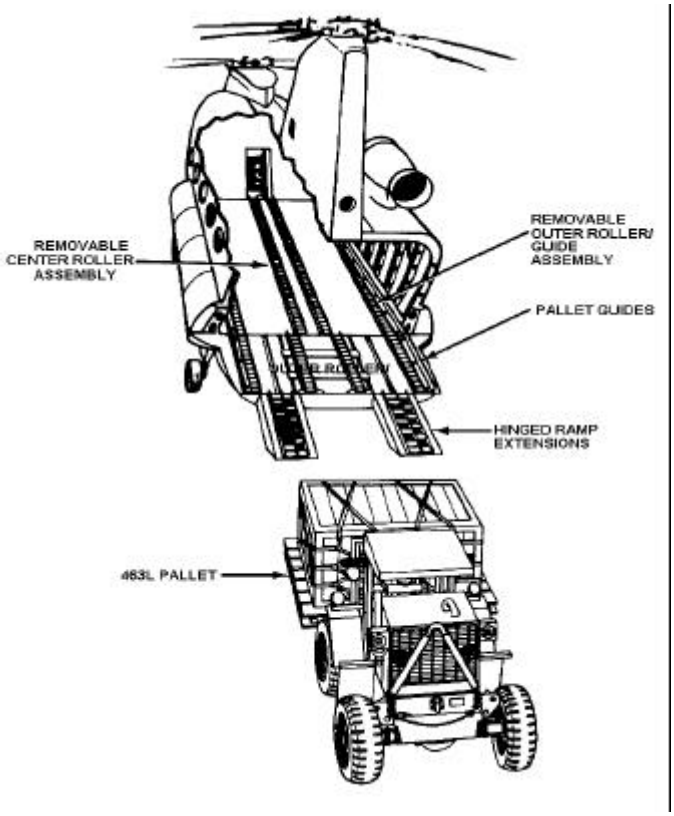

Figure 18-13. HICHS installed in a CH-47 helicopter

(1) ***Cabin/cargo area.*** This section is made up of three outboard rail/roller assemblies on each side of the cabin. The assemblies use twenty-six 5K tie-down fitting assemblies, eight 10K fitting assemblies, and two tie-down fitting assemblies. Four inboard guide/roller assemblies are mounted along the centerline of the cabin floor. They are secured with 10 centerline ring plug assemblies to the 5K rings in the floor.

(2) ***Ramp section.*** The ramp section of the system includes a right-hand ramp guide rail-roller assembly and a right-hand ramp inboard guide/roller assembly. There are also

Downloaded from http://www.everyspec.com

left-hand assemblies. A separate ramp support (see Figure 18-14) is used during loading and unloading operations.

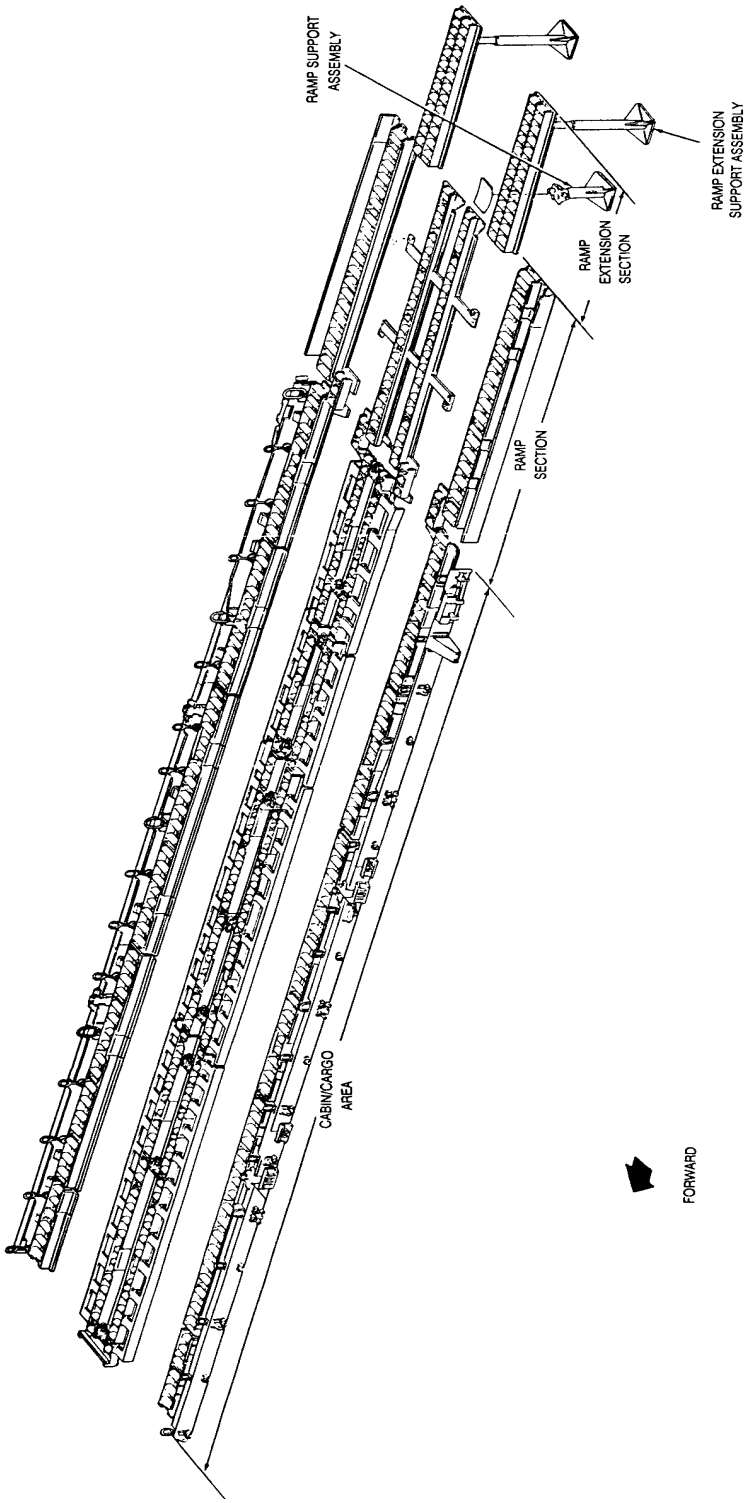

Downloaded from http://www.everyspec.com

Figure 18-14. Three sections of the CH-47 HICHS

(3) ***Ramp extension section.*** There are two ramp extension roller assemblies and two ramp extension support assemblies.

b. **Loading Operations.** The loading methods for the CH-47 HICHS are as follows:

(1) ***463L pallets.*** Up to three pallets may be winched or manually loaded on the HICHS. Figure 18-13 shows the loading of 463L palletized cargo.

(2) ***Warehouse pallets.*** These are the standard 40- x 48-inch pallet. When they are loaded, the 40-inch side of the pallet should be positioned across the handling system so that the 48-inch side is on the ramp guide rail. Eight to ten warehouse pallets can be loaded aboard the helicopter. During the loading, the pallet should be forklifted onto the ramp extension and balanced onto the outboard roller. Pallets may be winched or manually pushed into place. On the ramp, the pallet should be pushed outboard.

(3) ***Weight restrictions.*** Individual pallets may weigh up to 3,700 pounds. Pallets weighing 2,150 pounds or less may be loaded without any problem. However, in order to maintain floor isolation, the sum of the weights of longitudinally adjacent pallets must not exceed 4,300 pounds.

(a) A mix of pallets weighing, for example, 3,000 and 1,200 pounds, requires alternate loading.

(b) If the load consists of only pallets, each weighing more than 2,150 pounds, the pallets MUST be spaced longitudinally. To determine the distance required for spacing, use this formula: Weight in pounds divided by 45.2 equals distance in inches from center of one pallet to the center of the adjacent pallet. To determine spacing required for a load of pallets weighing 3,000 pounds each, perform this computation: 3,000 divided by 45.2 equals 66 inches center to center.

(c) Pallets spaced longitudinally require tie-downs for longitudinal, lateral, and vertical forces. There is no requirement to use a barrier system.

(4) ***Wheeled vehicles.*** These can be either winched in or manually loaded. For vehicle loading and specific tie-down procedures, refer to FM 55-450-2.

(5) ***Personnel.*** The HICHS can carry personnel only, or both cargo and personnel. If both are loaded, cargo handlers should load the cargo forward of the personnel.

18-8. SHORING. Shoring consists of wooden planks or similar materials placed on the cargo floor or deck of the aircraft. Five basic types of shoring are used when loading aircraft: approach, rolling, parking, bridge, and sleeper shoring. Illustrations of these shoring types are contained in FM 55-9. Two major purposes for using shoring aboard aircraft follows.

a. **Protection of the Aircraft Floor.** All tracked vehicles with metal cleats and studs, and vehicles with steel wheels require a minimum of 3/4-inch shoring. Shoring is required also for

Downloaded from http://www.everyspec.com

cargo in drums, trailer tongues, or any other object that could puncture or dent the aircraft floor. Shoring prevents metal-to-metal contact eliminating sparking caused by the skidding of cargo.

NOTE: The user is responsible for furnishing all types of dunnage that may be required.

b. **Distribution of Weight.** Properly laid shoring will distribute weight evenly over a large area. The psi of cargo placed on the aircraft floor may be above the specified floor limits. Distributing this weight evenly and over a greater area allows a load of higher-than-normal weight concentration to be carried.

(1) The weight of the load resting on shoring is not spread equally over the entire area of contact between the shoring and the surface. To increase the area over which a load is distributed, extend a plane drawn downward and outward from the peripheral line of contact of the load at a 45-degree angle, until it intersects the surface on which the shoring rests (Figure 18-15). Shoring increases the area of contact approximately equal to the shoring thickness on all sides of the object. A 2-inch thickness of shoring increases the area of contact by approximately 2 inches on all sides of the item resting on it. This spreading effect of weight by simple shoring is the same regardless of the shape of the area of contact.

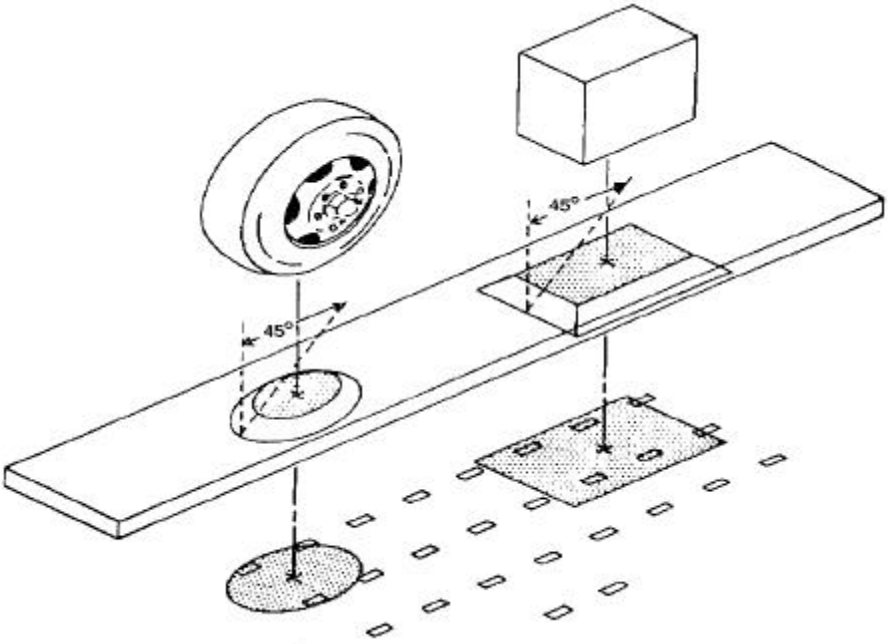

Figure 18-15. Increasing an area by shoring

(2) Formulas are used to compute the psi imposed on the floor of the aircraft by objects of different shapes.

NOTE: Carry answers only to the tenth place. Always increase psi answers to the next higher tenth if there is any remainder. Never increase area answers to the next higher tenth regardless of the remainder.

Downloaded from http://www.everyspec.com

(a) *Rectangle.* The weight of the object, divided by the length times the width, equals psi.

$$\frac{\text{Weight}}{\text{Length x Width}} = \text{psi}; \quad \frac{\text{4,000 pounds}}{\text{40 inches x 40 inches}} =$$

$$\frac{4{,}000}{2{,}000} = 2 \text{ psi}$$

(b) *Triangle.* The weight divided by one-half the base of the triangle, times the height.

$$\frac{\text{Weight}}{\text{1/2 base x height}} = \text{psi}; \quad \frac{\text{4,000 pounds}}{\text{15 inches x 25 inches}} =$$

.53 or .6 psi

(c) *Circle.* The weight, divided by the diameter squared, times .785.

$$\frac{\text{Weight}}{\text{Diameter}^2 \text{ x .785}} = \text{psi}; \quad \frac{250}{20^2 \text{ x .785}} = \frac{250}{400 \text{ x .785}} =$$

$$\frac{250}{314} = .79 \text{ or } .8 \text{ psi}$$

(d) *Circular barrel with rim.* The weight, divided by the outside diameter plus the inside diameter, times the difference, times .785.

$$\frac{\text{Weight}}{\text{Outside diameter} + \text{inside diameter} \text{ x different x .785}} = \text{psi}$$

$$\frac{\text{300 pounds}}{\text{22 inches + 20 inches x 2 inches x .785}} =$$

$$\frac{300}{42 \text{ x } 2 \text{ x .785}} = \frac{300}{84 \text{ x .785}} = \frac{300}{65.94} =$$

4.55 or 4.6 psi

(e) *Tire pad.* Weight of the axle divided by length, times width of tire pad, times .785, times the number of tires on the axle. (Each axle of a vehicle must be computed separately.)

Downloaded from http://www.everyspec.com

$$\frac{\text{Weight}}{\text{Length} \times \text{width of tire pads} \times .785 \times \text{no. of tires on axle}}$$

$$\frac{1{,}100}{14 \times 8 \times .785 \times 2} = \frac{1{,}100}{112 \times .785 \times 2} = \frac{1{,}100}{87.9 \times 2}$$

$$\frac{1{,}100}{176} = 6.25 \text{ or } 6.3 \text{ psi}$$

(3) Determining the area of contact using shoring.

(a) The area of contact will be increased by the thickness of the shoring laid.

NOTE: Shoring is only effective up to 2 inches in thickness.

(b) If shoring 2 inches thick is laid under an object that has a base of 50 inches by 40 inches and weighs 4,000 pounds, add 2 inches to the dimensions in each direction of the base.

50 inches + 2 inches x 40 inches + 2 inches = 52 x 42 = 2,184 square inches of contact

Use of shoring to increase the area of contact will decrease the psi. Shoring can make the difference between carrying and not carrying a given piece of equipment or load.

Downloaded from http://www.everyspec.com

PART SIX

RAIL AND INLAND WATER TERMINAL OPERATIONS

CHAPTER 19

MOTOR TRANSPORT

19-1. INTRODUCTION. Motor transport can provide contained delivery from origin to destination without transfer to another mode. The uses of motor transport are discussed below.

a. Motor transport has universal application for local haul, line-haul, terminal clearance, and terminal transfer operations. Line-haul implies two round-trips per day (one per operating shift); local haul entails four round-trips per day (two per operating shift). Line-haul movement is characterized by a high ratio of running time to loading and unloading time.

b. Motor transport personnel will give technical assistance in planning loads and will recommend methods of securing cargo. Representatives of technical services may also be called on for assistance and advice about equipment distinctive to their specialty. Transport personnel must also plan for the weight and size limitations of tunnels, bridges, curves, viaducts, or other obstructions along the route.

19-2. WEIGHT AND LOAD DISTRIBUTION. Marking and distributing of weight is discussed below.

a. Personnel will mark the weight and cube on cargo where it can be easily seen. If the weight is not marked, it can usually be determined from the ship's manifest or other shipping records. If cargo is not marked and loading data on the weights of different types of cargo are not available, the weight of the cargo must be estimated.

b. The distribution of weight on a motor vehicle affects the life of the frame, tires, axles, and other parts. A truck can be loaded within its rated gross weight capacity, yet individual tires and axles may be overloaded. Overloading may result from improper distribution of heavy cargo making the load excessive over a tire or an axle (Figure 19-1, page 19-2). Loads, such as structural steel, iron pipe, and lumber, may project far beyond the rear axle, overloading the rear axle and tires and tending to lift the front wheels. This reduces front-wheel traction and make steering difficult.

19-3. RULES FOR LOADING. To load and unload cargo, personnel should follow the rules listed below.

a. The driver is not usually required to handle cargo during loading and unloading, but he must ensure that his vehicle is loaded properly and the cargo lashed properly. The driver must also ensure that responsible personnel—

Downloaded from http://www.everyspec.com

- Do not load vehicles beyond the limit appearing on the vehicle data plate or the lower limit that may be prescribed by the responsible commander.
- Place heavy supplies at the bottom of the load and properly distribute the load.
- Place the load so that it will not shift; distribute the weight evenly.
- Do not build up loosely distributed loads too high. High, loose loads cause swaying, make the vehicle difficult to handle; and increase the danger of losing the cargo or overturning the vehicle.
- Put a tarpaulin over the cargo to protect against sun, dust, rain, or pilferage, if the truck has an open body.

b. The safety of loads in cargo vehicles depends upon the protection offered by the stakes or sides, the tailgate, and the tarpaulin with its rear and front curtains. Loads consisting of objects longer or higher than the body of an open cargo truck should be lashed.

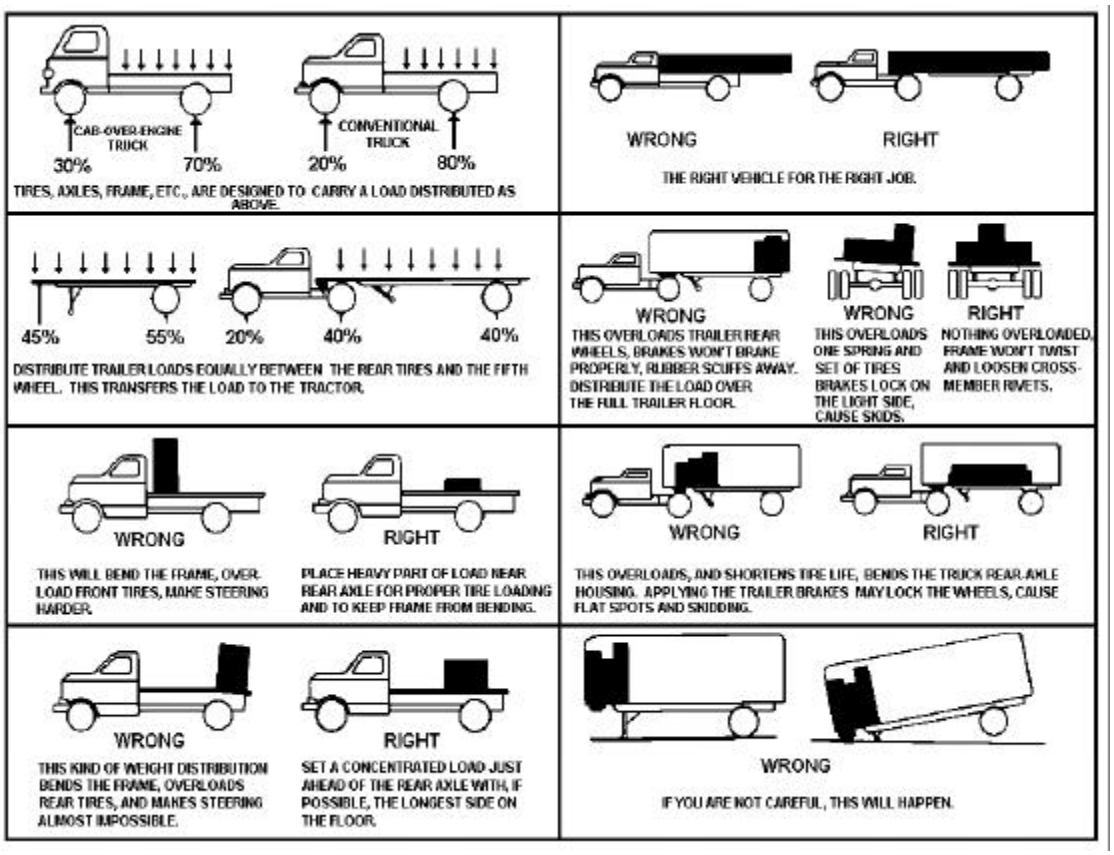

Figure 19-1. Right and wrong ways to distribute truck loads

19-4. UNITIZED LOADS. Because unitized cargo is made up of loads of uniform size, it is possible to preplan loads for cargo trucks and trailers.

a. **Cargo Trucks, 6x6, 2 1/2-Ton.** Loading procedures are as follows:

Downloaded from http://www.everyspec.com

(1) Containers can be loaded into 2 1/2-ton trucks by placing one container in each truck longitudinally. To prevent overloading vehicles, transport personnel must consider the weight of the container, the condition of the vehicle, and the condition of the road.

(2) If M34 and M135 2 1/2-ton, 6x6 trucks are to carry unitized loads, personnel will build a frame between the fender wells using 2- by 4- by 4-inch lumber to make a level floor across the body of the vehicle. When used, frames must be blocked and braced. Frames also make loading and unloading easier when using forklifts.

b. **Stake-and-Platform Semitrailers.** Loading procedures for palletized and containerized loads are as follows:

(1) ***Palletized loads.*** The number of palletized loads that can be carried in stake-and-platform semitrailers depends on the weight of the pallets and the model of the trailer.

(a) The M127 12-ton semitrailer is well suited for palletized cargo. The weight of the cargo dictates the manner in which the pallets are placed on the trailer bed.

(b) Palletized loads may be loaded in semitrailers using one of the following methods:

- Spot a trailer directly beneath a cargo boom during discharge and place palletized loads on the trailer directly from the cargo hook. Change the position of the trailer between drafts, and land each pallet in its exact stowage position on the trailer. This may delay the discharge.
- Position palletized loads on semitrailers by forklift trucks. During vessel discharge, spot semitrailers a short distance from the side of the vessel in a position that will permit forklifts to approach them from either side. Land the draft on the pier; move the draft to its position on the semitrailer by a forklift. The ship's cargo-handling gear will then operate at maximum speed, and the delay caused by maneuvering the trailer and steadying the draft is eliminated.
- Use truck-mounted or crawler cranes to load pallets aboard semitrailers. Attach a pallet bridle to the cargo hook of the crane, and load the pallets on the bed of the trailer.

(2) ***Containerized loads.*** Containers are placed in semitrailers so that the weight of the load is spread evenly over the trailer bed.

(a) During vessel discharge, containers are handled more slowly than palletized loads. Because of their size and weight, containers may be handled best by loading directly from the cargo hook to the trailer. The trailer can normally be maneuvered into position between loads without slowing discharge.

(b) Cranes may be used to load containers on semitrailers. Cranes are used when a shortage of semitrailers makes it impossible to load containers directly from the cargo hook to the semitrailer. The containers are moved to an area adjacent to the pier by forklift trucks and loaded onto semitrailers by crane as the semitrailers become available.

Downloaded from http://www.everyspec.com

c. **CONEX Tie-Down Systems.** Proper tie-down systems for CONEXs on various motor vehicles are shown in Figures 19-2 through 19-5, pages 19-4 through 19-5.

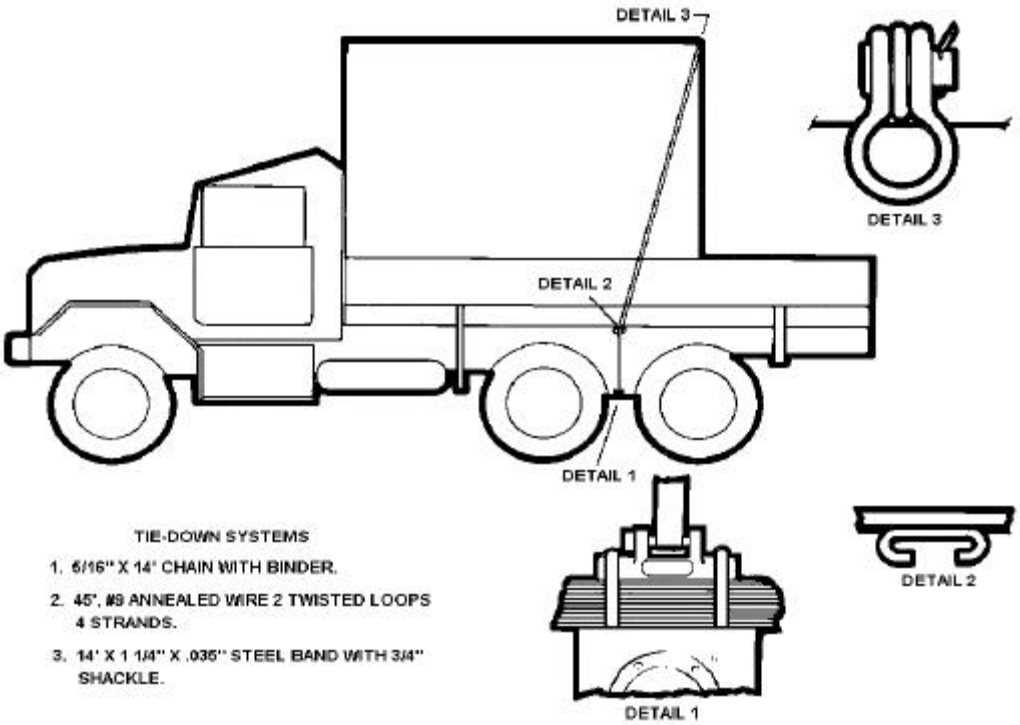

Figure 19-2. Recommended tie-down for CONEX on M-35 truck

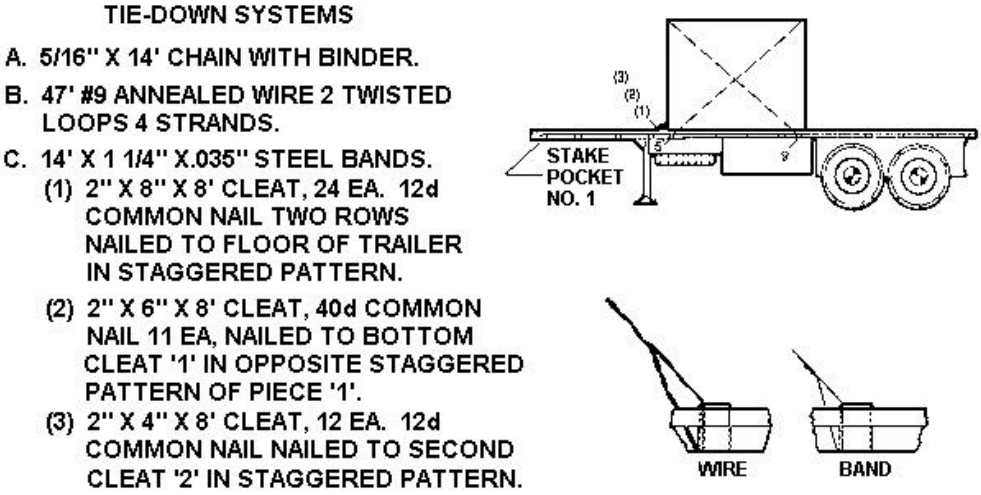

Downloaded from http://www.everyspec.com

Figure 19-3. Recommended tie-down for CONEX on M-127 semitrailer

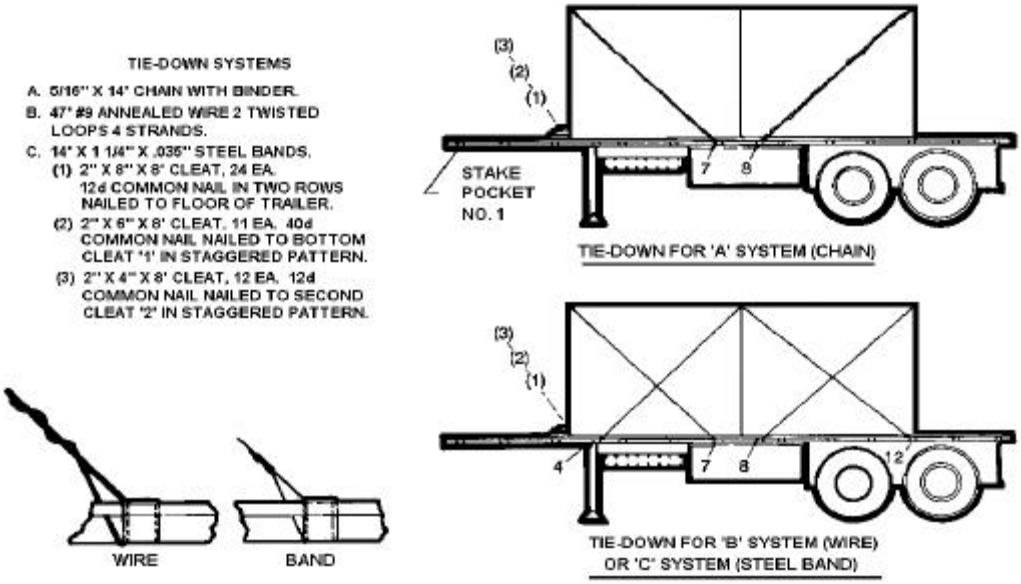

Figure 19-4. Recommended tie-down for two CONEXs on M127 semitrailer

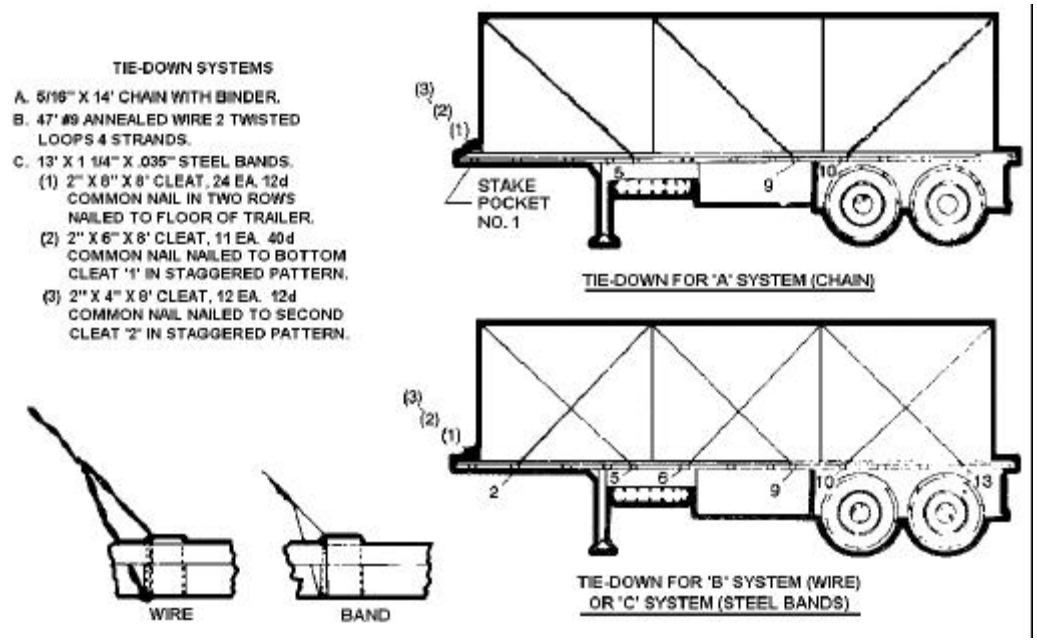

Downloaded from http://www.everyspec.com

Figure 19-5. Recommended tie-down for three CONEXs on M127 semitrailer

19-5. EXPLOSIVES AND FLAMMABLE LIQUIDS. The following guidelines from the Department of Transportation pertain to the shipment of explosives and flammables by military forces in a theater of operations and are applicable in the United States. Methods of handling such cargo overseas depend on circumstances and the military urgency. Regulations for handling dangerous cargo are agreed upon jointly by representatives of the US armed forces and the authorities of the governments concerned. All personnel must be constantly reminded of the safety rules governing the handling and moving of dangerous cargo. Officers and NCOs responsible for the handling of dangerous cargo must thoroughly instruct their personnel in safety rules and enforce them through constant supervision and on-the-spot correction of any violations.

a. Responsible personnel must avoid jars or shocks in handling explosives, particularly sensitive explosives used in detonators. Containers packed with explosives should never be carelessly rolled, thrown, or dropped. All reasonable precautions (such as stopping the engine and placing the vehicle in gear, setting the hand brake, and blocking the wheels) should be taken to prevent accidental movement of vehicles while they are being loaded or unloaded.

b. Responsible personnel should clearly identify vehicles carrying explosives unless there is need for secrecy.

c. Personnel must not smoke within 50 feet of any truck or trailer loaded with explosives or flammable liquids. Open flames, such as matches, cigarette lighters, or torches are prohibited within 100 feet of any vehicle loaded with explosives or flammable liquids.

d. All personnel must be instructed in the use of fire extinguishers. Each truck hauling explosives and flammables must have two fire extinguishers, one inside the cab and one outside on the driver's side. In areas where considerable quantities of explosives and flammables are being handled, a special apparatus must be available for fighting large-scale fires.

e. When a vehicle catches on fire, personnel will move all vehicles away from the vicinity of the fire and stop all traffic. Every effort must be made to warn personnel in the vicinity of the danger. Personnel will not drive motor vehicles transporting explosives or flammables past a fire until it has been determined that these vehicles can pass with safety.

f. When loading or unloading vehicles, personnel must ensure that explosives or flammables are not placed near the exhaust. Ignition and lighting systems must be properly insulated and frequently inspected to eliminate danger from short circuits.

g. Personnel will not carry fuses and detonating devices in the same vehicle with other explosives (fixed ammunition is an exception). Personnel will ensure loads are blocked and lashed to prevent shifting. Responsible personnel will line the interior of the truck body so that every portion of the lining with which a container may come into contact will be of wood or other nonsparking material. Gasoline-powered forklifts or dock tractors used where explosives or flammables are being handled should be equipped with spark arresters.

Downloaded from http://www.everyspec.com

h. Responsible personnel will ensure the entire cargo of explosives or flammables is contained within the body of the vehicle. The truck tailboard or tailgate must be closed and secured.

Downloaded from http://www.everyspec.com

CHAPTER 20

RAIL TRANSPORT

20-1. INTRODUCTION. Railroad facilities serving terminals in a theater of operations may be at the head of a pier or at an inland transfer point. The transfer point may be truck-to-rail or amphibian-to-rail. Terminal service units will load or unload rail equipment during cargo-handling operations. These units must plan rail loading procedures and secure cargo on rail cars. They must also know the type of equipment required at destination to load and unload cargo. The objectives of rail load planning are to minimize the amount of rail equipment used and to make the loading as simple as possible.

20-2. PREPLANNING STAGE. The preplanning stage consists of three steps: listing equipment by size category, making assumptions as to rail equipment available, and determining the capabilities of rail sidings to be used in loading.

a. **Equipment Size Category.** Reorganize the equipment list into groups of similar size pieces and add the dimensions of each vehicle, weight, and cube, for example—

- Small trucks between 3/4 and 2 1/2 tons.
- Trailers for small trucks.
- Trucks (2 1/2-ton).
- Trucks (5-ton).
- Trailers for 1/2-ton and 5-ton trucks.
- Tractors, semitruck (under 100-inch width).
- Trailers, semitruck (greater than 100-inch width).
- Tractor, semitruck (greater than 100 inch width).
- Other items under 100-inch width.
- Other items greater than 100-inch width.
- Track vehicles under 100-inch width.
- Track vehicles greater than 100-inch width.

b. **Rail Equipment.** Rail equipment may be supplied by the railroad. If rail equipment supplied by the railroad differs from the plan and/or the request, changes can be made easily. Most plans include five types of cars.

(1) Flatcars, 89-foot, (metal deck, cushioned, rubrail) have chain tie-downs. Some have 4-inch high metal sides and have arms and spanners built onto the ends. The maximum usable width is 100 inches up to the height of the arms.

(2) Flatcars, 68-foot, have wooden decks and can be used for both chain tie-downs and blocking and bracing. These cars, which have no sides, will accommodate equipment of almost any width.

(3) Multilevel flatcars, 89-foot, often have adjustable metal decks and are equipped with chain tie-downs. Ramps or cranes are required to load these cars. Headroom between the checks of the cars must be considered and reviewed carefully. A typical second deck

Downloaded from http://www.everyspec.com

on bi-level cars adjusts to three different positions, so it may leave headroom on the first deck at 77 inches, 84 inches, or 86 inches. If the bi-level flatcar has a roof (referred to as shielded), then the second deck may have headroom measuring 94 inches, 96 inches, or 103 inches, depending on how the second deck is adjusted.

(4) Gondolas are used mainly for CONEXs. These cars must have ends, be free of debris, and be at least 9 feet wide. Ten CONEXs can fit into one 68-foot car and eight into one 57-foot car.

(5) DODX flatcars are the US government fleet of heavy-duty rail cars designed for tanks and other heavy armored vehicles. The 54-foot, 100-ton car can carry one M1 tank or two M60 tanks, and the 68-foot, 140-ton car can carry two tanks. Since supply is limited, these cars should be used only for heavy armored vehicles.

c. **Rail siding.** Before any detailed planning can be done, the ITO must know how the train will be unloaded; for instance, if cranes are needed, they must be available at unloading points. He must also know the following information about the rail siding:

- Capacity, in length, of usable space on each siding.
- Weight, height, and size limits of ramps.
- Overhead restrictions.
- Track bed load limits, if any.
- Locations and sizes (square footage) of assembly and holding areas.
- Availability and capacities of cranes.
- Expertise of crane operators.
- Availability of blocking and bracing, wire, and other items.
- Availability, sizes, and capabilities of locomotives.
- Time available for loading.

20-3. DETAILED PLANNING. During the detailed planning stage, rail car equipment requirements are calculated and templated, and loading and call forward plans are developed. When calculating rail car equipment requirements—

- Think in terms of a "type load" for a rail car.
- Do not mix tracked and wheeled vehicles on the same car, since railroad tariffs are higher for the load configuration.
- Use 100,000 pounds as a type load limit on all cars, unless otherwise noted, or for the 140-ton DODX flatcar.
- Although 118-inch wide flatcars are available, do not exceed 100 inches in width on 89-foot rail cars for each type load because of blocking and bracing and clearance considerations.

a. Review sizes and weights carefully. Base the loading plan on the use of three types of rail cars: 89-foot metal deck, 68-foot wooden deck, and 68- or 54-foot DODX. You need to determine the type loads you will use on the rail cars to keep the number of rail cars required to a minimum. Type loads are loads that repeat themselves. For example, if you had to load twenty 2 1/2-ton trucks and ten 3/4-ton trucks, you would load two 2 1/2-ton trucks and one 3/4-ton truck on a rail car and repeat this configuration ten times.

Downloaded from http://www.everyspec.com

(1) A type load list for 89-foot chain tie-down flatcars includes four tracked vehicles less than 100 inches in width and weighing 25,000 pounds each. The most common type of tracked vehicle is the M113-series chassis. Occasionally, fenders, skirts, and mortar baseplate brackets may have to be removed. The following examples show how to determine the number of rail cars required when the 89-foot flatcar is used.

EXAMPLE 1: A total of 102 M113-series vehicles are to be loaded. According to the type load list, four of these vehicles will fit on an 89-foot flatcar.

Number of rail cars = 102 divided by 4 = 25 1/2

Rounded to 26 rail cars, 89-foot, chain tie-down

EXAMPLE 2: A total of 64 CUCVs, each with an M416 trailer, are to be loaded on 89-foot bi-levels. According to the type load list, four CUCVs and four M416 trailers will fit in an 89-foot space.

Number of 89-foot rail cars = 64 divided by 4 = 16

Number of 89-foot bi-levels = 16 divided by 2 = 8

EXAMPLE 3: A total of fifteen 2 1/2-ton trucks are to be loaded. Two CUCVs and two M416 trailers are added at the last minute. According to the type load list, three trucks will fit on an 89-foot flatcar with enough room left for either a CUCV or an M416 trailer. The number of 89-foot flatcars to be ordered is five. These vehicles are loaded circus style (see Figure 20-1) as follows: three 2 1/2-ton trucks, followed by a CUCV and one M416 trailer, until the cars are filled. In each load, the CUCV is on the first rail car and the M416 trailer is on the second.

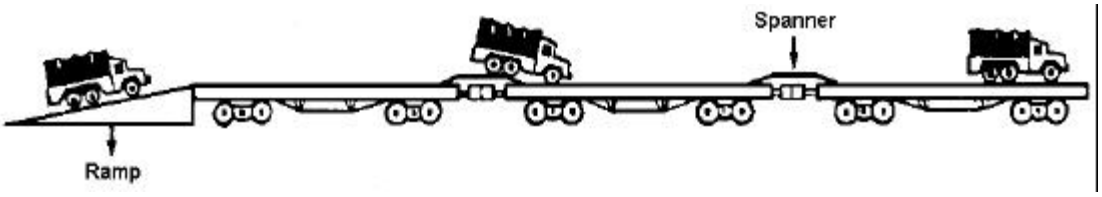

Figure 20-1. Circus method of loading vehicles

(2) Type loads for 68-foot commercial wooden-deck chain tie-down flatcars include—

- Two tracked vehicles weighing about 40,000 to 50,00 pounds each, such as a D7 bulldozer, an M578 recovery vehicle, or an M109- and M110-series howitzer. The width of these vehicles is usually greater than 100 inches.
- One tracked vehicle weighing about 100,000 pounds, such as a tank, a combat engineer vehicle, a launcher (AVLB), bridge tank, an M60 chassis, and an M88 recovery vehicle. The AVLB launcher and bridge must be on adjoining cars. The vehicle must be chocked, braced, and secured with wire rope or chains.

Downloaded from http://www.everyspec.com

- One large wheeled off road vehicle (GOER M520, M533, or M599) plus one pickup sized truck with a large hard body (maintenance contact truck or ambulance).
- Two front-end loads.
- One semitractor M916 or M920 plus trailer.

(3) Type loads for 68-foot DODX-HD (140-ton flatcars) may contain—

- Two M1 tanks.
- Two M60 tanks.
- Two M728 combat engineer vehicles.
- Two M88 recovery vehicles.
- Two M109 self-propelled howitzers.

b. If available, use Air Force MAC Form 571 Series for rail car templating. After the detailed plan of the rail cars is complete, prepare a plan for the cars to be switched to which ramp. This plan is given to the rail representative for spotting of the cars at the correct ramp.

- The cars must be located at the proper ramp in proper sequence.
- Try to have only one type of car at a ramp at a time.
- If more than one type of single level flat car is to be at a ramp, an circus style loading is to be used, the narrowest cars should be on the end away from the ramp and the widest flat car is at the ramp end. (If 89- and 69-foot cars are at the same ramp, then the 68-foot cars are at the ramp end.)
- If cars are to be crane loaded with a ground crane, then the entire siding must have crane access.
- If cars are to be crane loaded with a gantry or overhead crane, then provisions must be made to either move the cars under the crane or the crane over the cars.
- DO NOT PLAN TO MOVE A BULLDOZER OVER A METAL DECK RAIL CAR. It will not be controllable. Dozers require parking and rolling shoring on metal deck cars.
- Multilevel cars should be loaded together and at a ramp end.

c. After equipment is prepared for deployment in the unit motor pool, it is sent to an installation staging area. Vehicle preparation should not be done at the ramp. Reconfiguration of the vehicle at this point will impede the loading process. There, it is lined up by rail car loads. Because all equipment cannot be loaded onto rail cars simultaneously, it is sent from the installation staging area to the railhead in the sequence that the rail cars are ready for loading. This sequence is known as the call forward plan.

NOTE: The railroads belong to the AAR, which publish the loading rules for all the railroads to follow. It is also important to use TM 55-2200-001-12.

20-4. LOADING VEHICLES IN RAIL CARS. The loading procedures are discussed below.

a. **Open-Top Cars.** The two types of open-top cars are the flatcars and the gondola cars. Both are discussed below.

(1) ***Flatcars.*** The loading procedures are as follows:

Downloaded from http://www.everyspec.com

(a) Vehicles can be loaded and unloaded with hoisting equipment. Mobile cranes are generally used. Hoisting by cranes is a simple procedure, provided proper slings are used. Spreaders must be used to protect radiators, fenders, and the rear of the body from being crushed.

(b) When vehicles must be loaded from ground level, a ramp can be improvised using railroad ties and planking. A ramp suitable for loading most ordnance items is shown in Figure 20-2, page 20-6.

(c) For loading small vehicles, the width of the ramp may be reduced to two double-plank runways, with the planks in each cleated together. The short wheelbase on some multiaxle items and the undercarriage or underhull clearance determines the length of the planking.

(d) The freight car bearing the ramp must be securely blocked against rolling. Successive cars must remain coupled and be chocked at several points along the train when vehicles are being towed aboard the train.

(e) If the freight cars are not on an isolated track or blocked siding, each end approach to the train must be placarded (blue flag or light) to indicate that persons are at work and that siding cannot be entered beyond the placarded points.

(f) Vehicles that can be loaded under their own power are driven onto the improvised apron at the base of the ramp and guided into position on the flatcar.

(g) Vehicles that have been processed must be towed onto the improvised apron at the base of the ramp and unhitched. A cable attached to the vehicle and laid along the centerline of the flatcar is used to pivot the vehicle so that it points toward the ramp. Personnel who assist in pivoting the vehicle into position must be careful to avoid injury from side-whipping action likely to occur when strain is applied to the cable. After the first vehicle has been loaded on the flatcar, additional vehicles may be similarly hauled aboard by cable. A vehicle with winch is spotted at a right angle to the train (see Figure 20-3, page 20-7). The vehicle is spotted at about the third or fourth flatcar to facilitate signaling and because of cable-length limits. A single-sheave snatch block, located between cars on the train centerline, provides the necessary lateral pull. Vehicles passing the snatch block can be towed by a vehicle on the ground. A long tow cable from the towing vehicle lessens the tendency of the towed vehicle to stray from the centerline of the train.

(h) When a train of flatcars is being loaded, steel or wooden spanning platforms (spanners) or bridges are used to cover the gap between cars. Flatcar brake wheels must first be lowered to floor level to permit passage. A pair of improvised spanning platforms is shown in the inset in Figure 20-2. Spanning platforms are moved along the train by hand as the vehicle advances.

(i) On completion of loading, the ramp planks and bridging devices are loaded on the train for use in unloading. Random sizes of timbers used in building the approach apron up to rail level should be included. After vehicles have been blocked, all material is securely fastened to the car floors and entered in the bill of lading.

Downloaded from http://www.everyspec.com

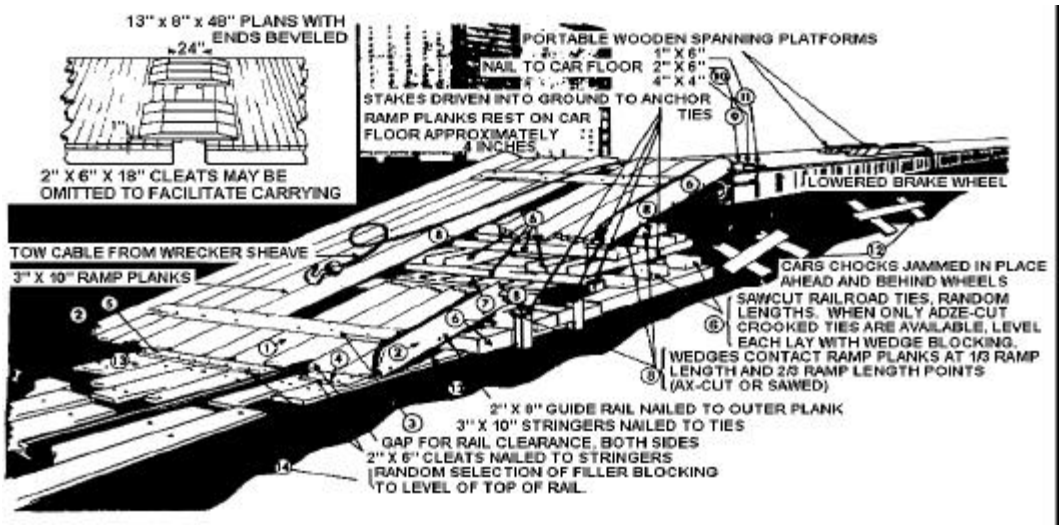

BILL OF MATERIALS FOR RAMP AS ILLUSTRATED					
PART NO.	QTY REQD	PART NAME	LENGTH	WIDTH	THICKNESS
1	9	RAMP PLANKS	20 FT	10 IN	3 IN
2	2	GUIDE RAILS	20 FT	8 IN	2 IN
3	2	TIE STRIPS	8 FT	8 IN	1 IN
4	2	CLEATS	18 IN	6 IN	2 IN
5	1	CLEAT	56 IN	6 IN	2 IN
6	31	RAILROAD TIES	8 FT	8 IN	8 IN
7	AS REQD	FILLERS	AS REQD	10 IN	3 IN
8	AS REQD	WEDGES (CUT TO FIT)	8 FT		
9	1	STEPDOWN PIECE	8 FT	4 IN	4 IN
10	1	STEPDOWN PIECE	8 FT	6 IN	2 IN
11	1	STEPDOWN PIECE	8 FT	6 IN	1 IN
12	4	CHOCK BLOCKS	AS REQD	4 IN	4 IN
13	AS REQD	STRINGERS	AS REQD	10 IN	3 IN
14	AS REQD	GROUND DUNNAGE	AS REQD		

NOTES:

1. RAMP SHOWN IS OF CAPACITY OF LARGEST END-LOADING FREIGHT CAR. FOR LESSER LOADS, REDUCE NUMBER OF RAMP PLANKS.
2. WIDTH DETERMINED BY TREAD OF MATERIEL BEING LOADED.
3. FOR LOADING TWO-WHEELED ARTILLERY TRAILERS, OR SHORT-WHEELBASE MATERIEL, RAMP PLANKS MAY BE SHORTER.

CAUTION: ***WHEN RAMP IS TOO SHORT, UNDERPINNING OF MATERIEL WILL STRIKE END OF RAMP.***

4. OPENING AT CENTER MAY BE FILLED UP TO THE CAR COUPLER TO AVOID INJURY TO MANEUVERING PERSONNEL.
5. FOR LOADS OVER 40 TONS, APPROACH END OF FLATCAR MUST BE BLOCKED UP TO AVOID TIPPING OF FLATCAR.
6. THIS TYPE RAMP IS ADAPTABLE TO DROP-END GONDOLA AND AUTO END-DOOR BOXCAR LOADING.
7. WHEN LOADING AN AUTO END-DOOR BOXCAR, IT MAY BE NECESSARY TO LOAD A FLATCAR COUPLED TO THE BOXCAR TO GAIN OVERHEAD LOADING CLEARANCE.
8. WHEN LOADING BY WRECKER CABLE, WITH PULL AT 90 DEGREES TO TRAIN, USING A SHEAVE, FLATCAR AT POINT OF PULL MUST BE LASHED TO ADJACENT RAILS, CARS, OR OTHER FIXED OBJECT.

Downloaded from http://www.everyspec.com

Figure 20-2. Improvised end-ramp for loading vehicles

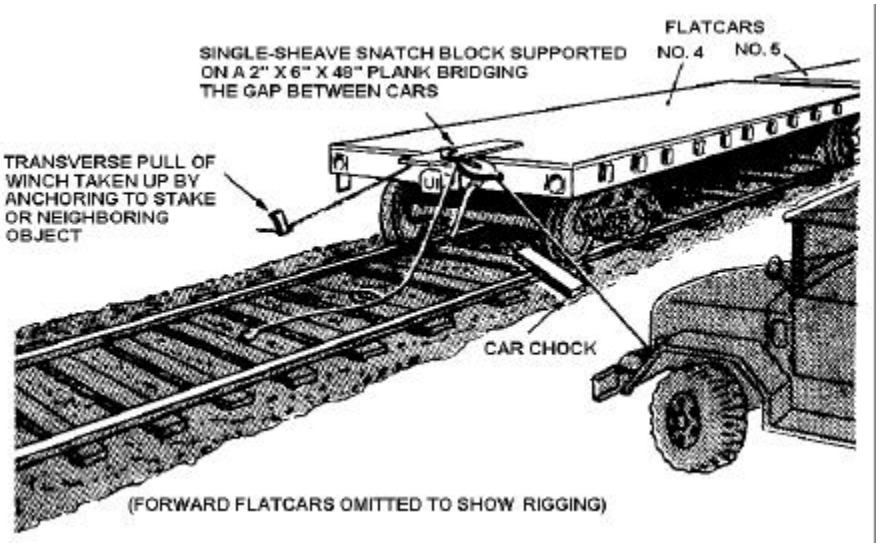

Figure 20-3. Vehicle winch used to power towing cable

(2) ***Gondola cars.*** The loading procedures are as follows:

(a) Vehicles can be loaded in fixed-end gondola cars only when hoisting facilities are available for initial loading or unloading at destination. False flooring must be added to hopper or drop-bottom gondola cars in which unboxed vehicles are shipped.

(b) Drop-end gondola cars can be loaded exactly like flatcars ((1) above). When gondola cars are ordered, the inside width required must be specified since some gondolas have gussets along the inner sides that affect clearance; height of fixed sides is immaterial. Vehicles may progress through gondola cars by passing over two inwardly-dropped ends or over spanning platforms.

b. **Boxcars.** End-door boxcars are spotted with the door end toward the ramp and loaded like flatcars ((1) above), except that the vehicles must be pushed into the boxcar or towed by cable and block.

(1) A vehicle that is almost as high as the inside height of the boxcar may first be loaded on an adjacent flatcar. The flatcar is coupled to the door end of the boxcar after the two end doors have been opened. When end-door boxcars are ordered, inside height must be specified once some automobile boxcars have an overhead built-in automobile-loader rack that affects inside height calculations. Open-end doors must be kept clear of traffic on adjacent tracks.

(2) Vehicles can be loaded in ordinary boxcars by using roller automobile jacks to maneuver them into place. Automobile boxcars have large single or double sliding doors at each

Downloaded from http://www.everyspec.com

side. They must be loaded from a platform of about the same level as the boxcar floor or from an adjacent flatcar. Steel plates or spanning platforms must be used to bridge the gap between platform and car.

c. **Foreign Cars.** Foreign locomotives are usually smaller than those in the United States and have less tractive effort; consequently, their capacities are less. Rolling stock is generally smaller and lighter. Since many foreign cars do not have automatic brakes, they must travel at greatly reduced speeds or use additional personnel in the train crews to operate the brakes by hand.

(1) Generally speaking, foreign railroads do not handle the volume of traffic that is handled in the United States. The average length of haul is much shorter and the equipment much lighter. Therefore, the length of the train and the gross tonnage are considerably less than that of the average freight train in the United States.

(2) Caution should be taken when loading heavy equipment in foreign cars because the floors are not as strong as those of American cars.

d. **Capabilities and Load Limits.** The load limit represents the maximum load under which a car can operate safety. This load, combined with the light weight of a car, gives the maximum AAR axle loading for the car. Loads must be placed so that there is no more weight on one side of the car than the other. The load on one truck wheel unit containing two or more pairs of wheels, brake components, center casting, and truck bolster, located at each end of a car, must not exceed one-half the load limit stenciled on the car. (Complete details of rail car loading are contained in TM 55-601.)

e. **Multilevel Car Special Planning.** The loading procedures are as follows:

- Vehicle preparation for multilevel cars is more intensive than that for single deck flatcars. Radio antennas and radar mounts should be removed.
- In multilevel cars without a roof (shielded) there may be a tendency to load vehicles that are too high or with equipment such as radio antennas. Therefore, the maximum height of the car and load should be obtained from the railroad and then double-checked with the load plan and the actual load.
- Small trucks (pickup trucks) with hard bodies such as maintenance contact trucks and ambulances can be loaded with care on multilevel cars; however, dimensions of the vehicles must be carefully checked with the dimensions of the cars to avoid problems when loading.
- The weight on the rail car must be carefully checked.
- Do not load the rail car so that it is top heavy.

20-5. LOADING UNITIZED CARGO IN RAIL CARS. The loading procedures are as follows:

a. **Palletized.** In the United States, loading, blocking, and bracing of palletized shipments in railroad cars must conform to the instructions given in TM 55-601 and to pamphlets issued by the AAR Operating-Transportation Division, Freight Loading and Container Section. These rules may also be used as guides for a theater of operations. The following additional rules must be observed for palletized shipments. Responsible personnel should—

Downloaded from http://www.everyspec.com

- Block the load, not the pallet. A load smaller than the pallet must be increased so that it is even with or slightly larger than the outside edge of the pallet.
- Use bulkheads in the ends of the car when pallets are heavy and the dented car ends cause uneven surfaces.
- Use end gates as high as the entire height of the load. Loads that extend above gates put unnecessary strain on strapping.
- Be sure that pallets in car doorways (foreign or American) are accessible to forklift trucks.

b. **Small trailers.** Small trailers (1/4-, 3/4-, 1 1/2-ton) can be inverted and stacked on top of each other (piggyback). A crib is first built and placed in the bed of the lower trailer. The two are then mated, banded together, and tied down.

c. **Semitrailers.** Any size flatbed trailer can be loaded piggyback. A crane and heavier banding material, such as chains and cable, must be used to load semitrailers. Trailers can be loaded attached to their prime movers. The prime mover is blocked and tied down; then the trailer is blocked and tied down.

d. **Towed Artillery.** Towed artillery is similar to a small trailer. The trailers are locked together and blocked against lateral as well as fore-an-aft movement. The wheels are blocked like any wheeled vehicle.

e. **Containers.** Most units use containers, CONEXs, or shelters to move classified or sensitive cargo. The gondola is ideal for shipping CONEXs and large shelters. They do require the support of a large forklift or a crane. The containers are blocked with 2 x 4s on all sides and tied down with cables from their top lifting fittings to rails running along the top of the gondola sidewalls. Any space remaining in the car must be blocked to prevent the containers from shifting. When flatcars are used, all sides must be blocked with 2 x 4s stacked two high and tied down to the stake pockets.

NOTE: When loading containers, chain tie-down cars should be used whenever possible.

20-6. HAZARDOUS CARGO. Shipments of explosives and ammunition made by military establishments in the CONUS must comply with regulations of the DOT Hazardous Materials Regulation Board, port and harbor regulations, state and municipal laws, and recommendations of the Bureau of Explosives. Difficulties in complying with such regulations must be reported in detail through proper channels to the MTMC commanding general. The DOT and AAR regulations applicable in the United States are good guides for shipment of explosives and flammables by military forces in the theater of operations (see CFR 49).

20-7. GENERAL RULES FOR LOADING. The steps for loading cargo are discussed below.

a. **Inspection.** Personnel must inspect all freight cars before they are loaded and ensure that they are in a suitable condition to safely carry loads to destination. Inspect for brake handle removal, spanners and clearances, and blue flags. Make sure that the cars are in the proper order. (Narrowest car furthest from the ramp end.) Check the multilevel cars for interior clearance. Change the call forward plan if the vehicle clearance is not available. Failure to check clearances can cause disruption in loading. A vehicle may become stuck in a car or may not be able to pass a

Downloaded from http://www.everyspec.com

certain point. The corrective action is usually a rail car switching which can cause up to a day delay in the loading. This is a severe penalty for not checking the clearances.

b. **Side Bearing Clearance for Loaded Cars.** Clearance between the side bearings and the undercarriage of the car must be sufficient for free curvature of trucks (rail car wheel units).

c. **Maximum Load Weight.** The weight of the load on a car must not exceed the load limit (not capacity) stenciled on the car.

(1) The weight of the load on one truck must not exceed one-half the load limit stenciled on the car. In case of doubt, the load must be weighed. Materiel loaded between truck centers and ends of cars must not exceed 30 percent of the stenciled load limit (15 percent each end when both ends are loaded and 10 percent when loaded at one end only). See Figure 20-4.

(2) Figure 20-5 shows the percentages of allowable loaded weight for the standard flatcar.

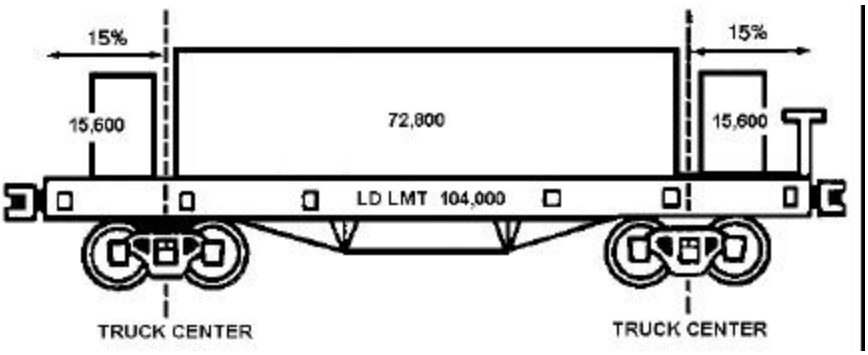

Figure 20-4. Maximum load weight guidance

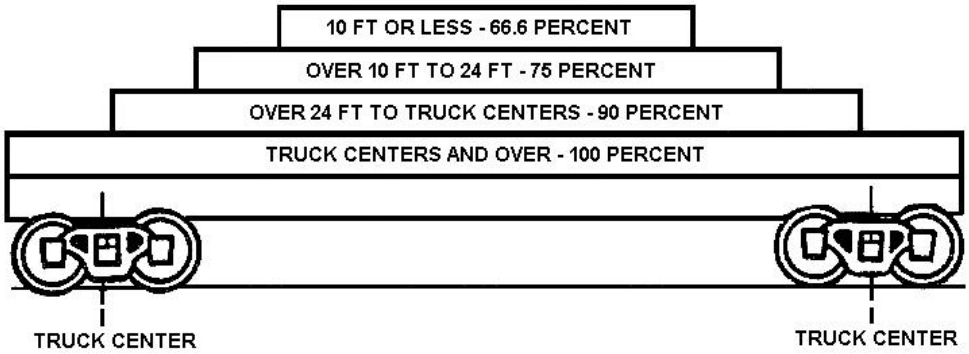

Figure 20-5. Standard flatcar load limits

Downloaded from http://www.everyspec.com

d. **Doorway Protection in a Closed Car.** Doorway protection is provided when there is a possibility of cargo falling or rolling out of the doorway or coming in contact with side doors. Door openings are protected with wood or metal ties of sufficient strength and number, and adequately secured. Figure 20-6 shows an example of the construction of bulkheads for doorway protection.

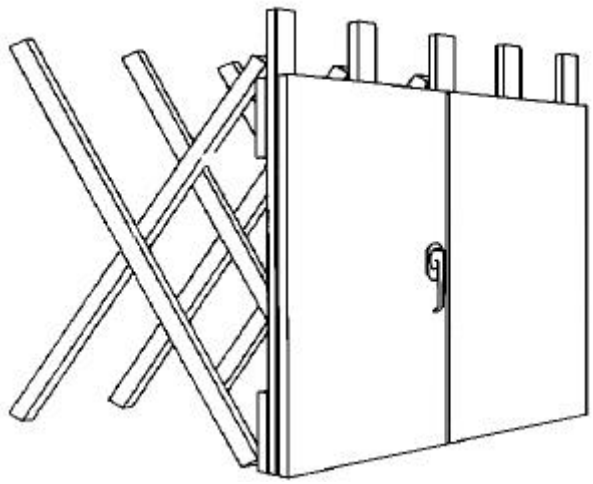

Figure 20-6. Correctly constructed bulkheads for doorway protection

20-8. IDLER CARS. Idler cars do not carry cargo or loads. These cars merely accommodate the overhand of a load too long for a single car. For example, a bridge girder 100 feet long may be loaded on a 50-foot gondola; 25 feet at each end may overhang a flatcar or gondola. The cars on each end of this triple load are idler cars. The waybill for the shipment carries the numbers of all three cars and designates the idlers. A crane on its own wheels with its boom lowered always has an idler. If the load of a two-car shipment rests on both cars, the second car is not considered an idler. In this case, each car is a part of the double load.

a. If an idler is used or a two- or three-car shipment is made, the uncoupling levers are always disconnected to prevent accidental separation of the cars. When cargo rests on two or more cars, steel shims are placed between the couplers and the buffer plates of each car. This eliminates slack between the cars.

b. Personnel must distribute the weight of the load crosswise on a car. Factors that must be considered when distributing the weight of the load are as follows:

(1) The load must be located so that the weight along both sides of the car is equal for the entire length of the load.

(2) Suitable ballast is used to equalize the weight when the load cannot be placed to obtain equal distribution of weight crosswise on the car.

Downloaded from http://www.everyspec.com

(3) Unless otherwise specified, if the vacant space between load and car exceeds 18 inches, the load must be secured to prevent its moving or slipping toward the sides of the car.

20-9. VEHICLE SECUREMENT. Once a vehicle is on the rail car and spotted properly, it is ready to be secured to the rail car. Blocking and bracing materials must be ordered before the operation begins. Since these materials usually arrive in bulk, they will require sorting. Organize blocking and bracing materials alongside the specific rail cars.

NOTE: All nails and spikes driven in blocking are driven vertically.

a. **Blocking and Bracing.** Do not install both the fore and aft wheel blocks before cables are tightened. This will cause the vehicle to be pulled forward and off of the wheel block as the forward cables are tightened. To ensure wheel blocks fit snugly, personnel will—

- Install forward wheel blocks.
- Install side wheel blocks.
- Tighten forward cables.
- Install aft wheel blocks.
- Tighten rear cables.

(1) ***Wheel blocks.*** There are many different wheel block patterns. Wheel block patterns for each type of vehicle are shown in TM 55-2200-001-12 and the AAR manual. The most common wheel block is the standard pattern 16 block (Figure 20-7). All wheels are blocked fore and aft for longitudinal movement.

(2) ***Wheel side blocks.*** The wheel side block assembly is shown in Figure 20-8. A 2 x 4 is nailed to a 2 x 6 to make the basic wheel side block. Barrier material, such as roofing paper or burlap, is placed against the tire and on the car floor to prevent chafing and tire puncture. The basic side block assembly is then placed on the barrier material and fitted snugly against the tire. This assembly should be nailed to the car's floor with at east five 40-penny nails. For 2 1/2-ton trucks or smaller, a second 2 x 4 is nailed on top of the first, thereby making a 4 x 4. If the vehicle is five tons or larger, a third 2 x 4 is nailed to the second, thereby creating a 4 x 6.

(3) ***Side blocking.*** Side blocking must be completed before loading; end overhang is prohibited. To perform side blocking, personnel must first measure the inside vehicle width from track to track, then subtract 7 1/2 inches from the inside width. The result is the width of the horizontal pieces of the side blocking frame. Center these pieces on the car floor. The forward and rear pieces should correspond to the front and rear road wheels of the tracked vehicle. Nail these pieces to the car floor two levels high, with 40-penny nails, using wooden 2 x 4s. Careful measuring is important to position the tank on the rail car. Make sure to allow for brake wheel clearance, and do not allow overhang to the next car. Once the horizontal pieces are in place, cut the longitudinal pieces, butt them tightly against the horizontal pieces, and nail them to the car floor with 40-penny nails as shown in Figure 20-9, page 20-14. The longitudinal pieces are also built up two levels high. You are now ready to load the tracked vehicles. For some "unit trains" side blocking is not required.

Downloaded from http://www.everyspec.com

NOTE: Three ground guides are assigned to load tracked vehicles on rail cars. The center guide is in charge of loading. One guide on each side of the rail car keeps the center guide informed as to the overhang of the vehicle track. Hand signals must be used. If measurements are correct, very little daylight will be seen between the side blocking frame and the tracks.

Downloaded from http://www.everyspec.com

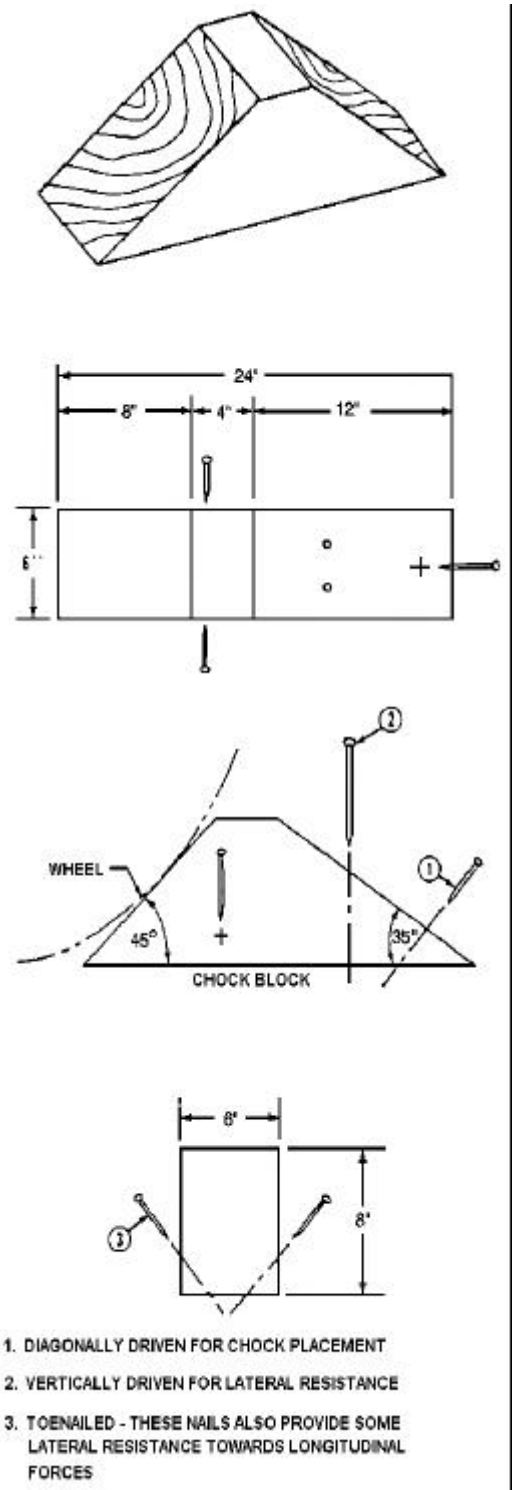

Figure 20-7. Standard pattern 16 block

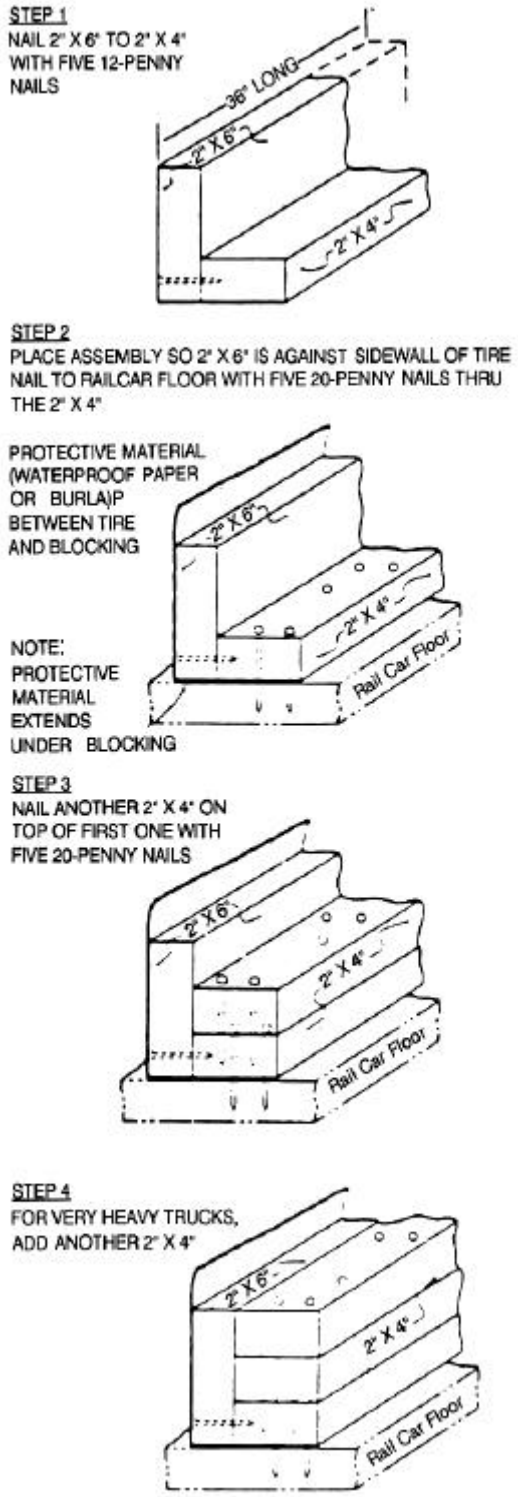

Figure 20-8. How to make side blocking for wheels

Downloaded from http://www.everyspec.com

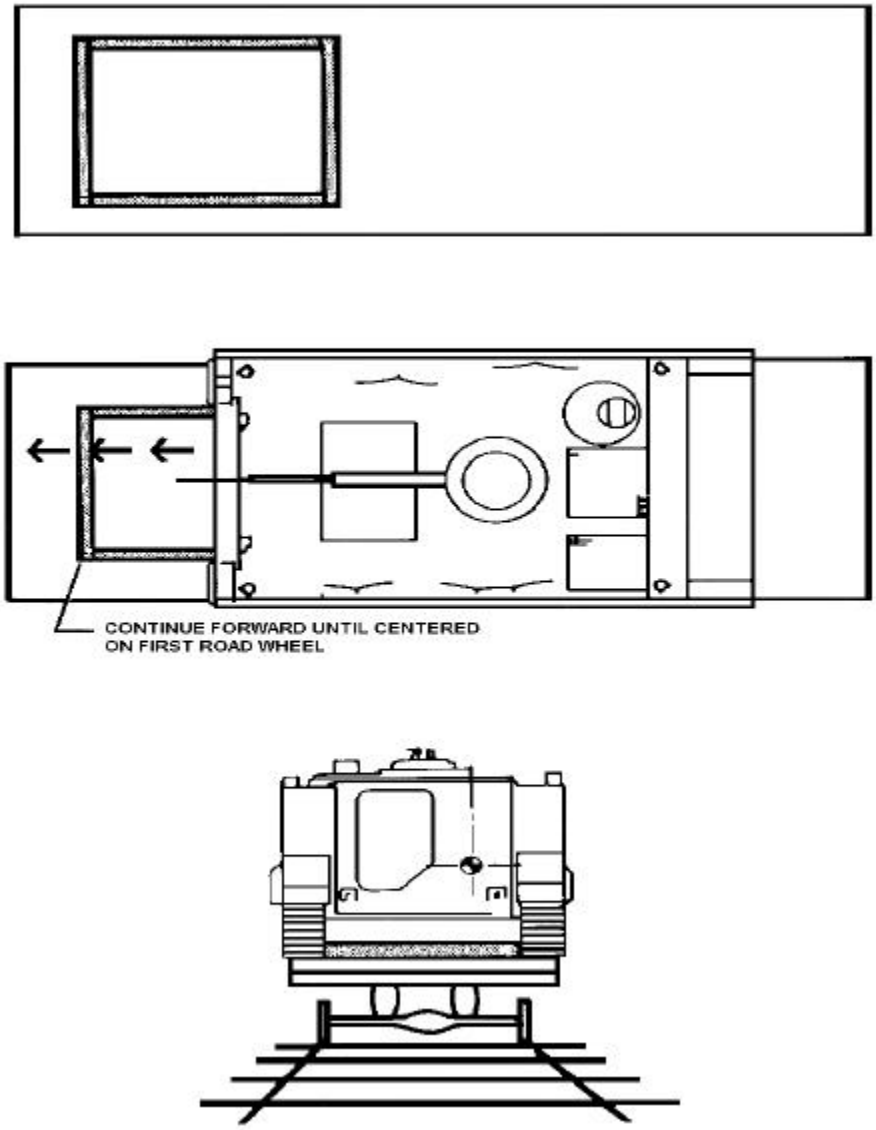

Figure 20-9. Side blocking frames

(4) ***Blocking.*** When the tank is in place, two front blocks are placed against the treads and nailed down with 40-penny nails. Once the front blocks are nailed in place and the area is clear of personnel, the center guide instructs the tank driver to pull the tank forward until the treads are up on the front blocks a few inches. The brakes are then set. Now the rear blocks are placed against the rear of the treads and nailed into place with 40-penny nails. Next, personnel clear the area and the guide on each side inform the center guide that the area is clear. The center guide then instructs the tank driver to release the brakes, and the tank settles into the blocks. When settled, the brakes are set and the engine is cut off (out of gear). The road wheels are now blocked. The road wheel blocks consist of three pieces each made of 4 x 4 lumber. Three road wheels are

Downloaded from http://www.everyspec.com

blocked on each side (with three blocks) (Figure 20-10). While the tank is being blocked, the crew secures the turret by setting the turret lock and wiring it in place.

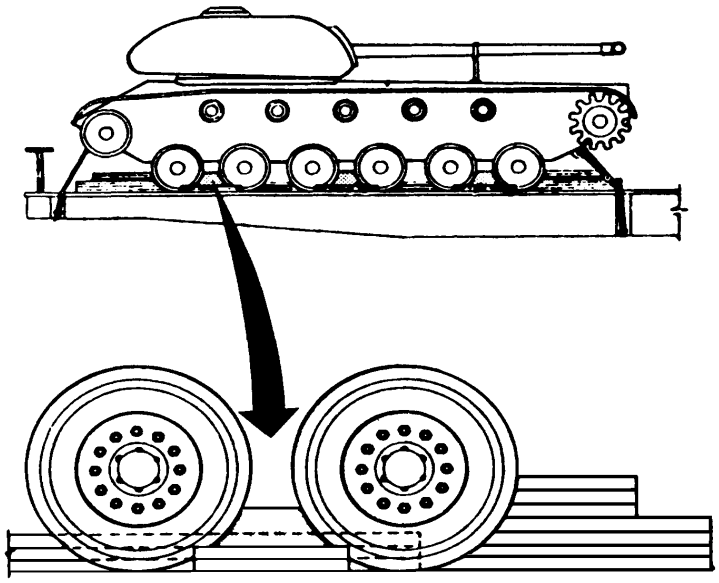

Figure 20-10. Road wheel blocks

b. **Tie-Down Procedures.** The primary means of tying down vehicles and equipment is with wire rope, cable, or chains. Wire rope is very strong but to work with it can be dangerous and difficult. This is especially true of 4/8-inch diameter (or wider) wire rope. When working with wire rope personnel must always wear gloves to prevent cuts from stray strands. Damaged, bent, or frayed wire rope should never be used for an actual move, because it is weak and will not hold its rated strength.

(1) ***Thimbles.*** Use a thimble to bend wire rope around sharp edges or corners (Figure 20-11). A thimble prevents the wire rope from kinking and thus losing some of its rated strength. Use a cable clamp to secure the wire rope to the thimble. The cable clamp should be one size larger than the wire rope so that it will fit over the thimble.

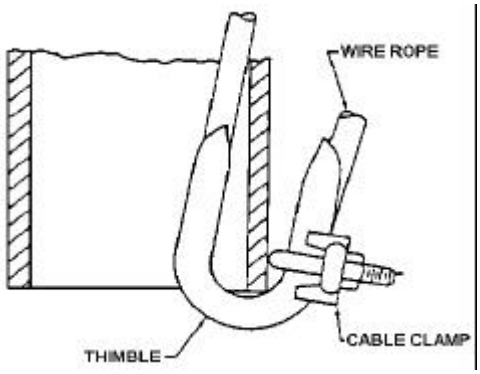

Figure 20-11. Use of thimble and cable clamp

Downloaded from http://www.everyspec.com

(2) ***Cable tension.*** Turnbuckles or chain hoists are used to tighten cables to their proper tension. Cables should not be crossed and all cables must be tensioned evenly. Figure 20-12 shows a chain hoist ("come-along") and cable grippers. The grippers are attached to each end of the wire rope and are pulled together by the chain hoist. The wire rope ends are then clamped into place as shown in Figure 20-13. Cable must be tensioned sufficiently to hold the weight of one person with no more than 1-inch deflection. Use care when tightening cables on lightweight vehicles to prevent too much strain on the vehicle suspension.

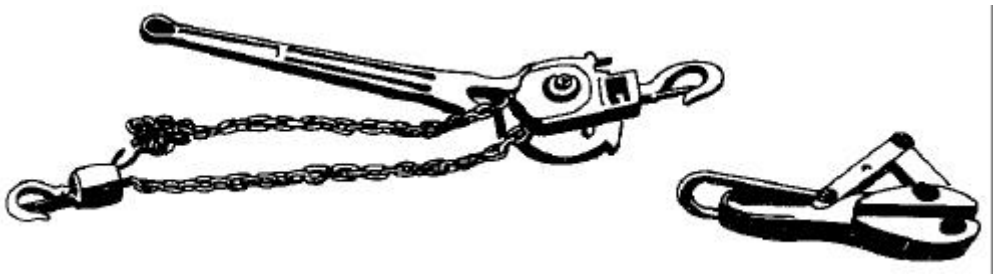

Figure 20-12. Chain hoist and cable grippers

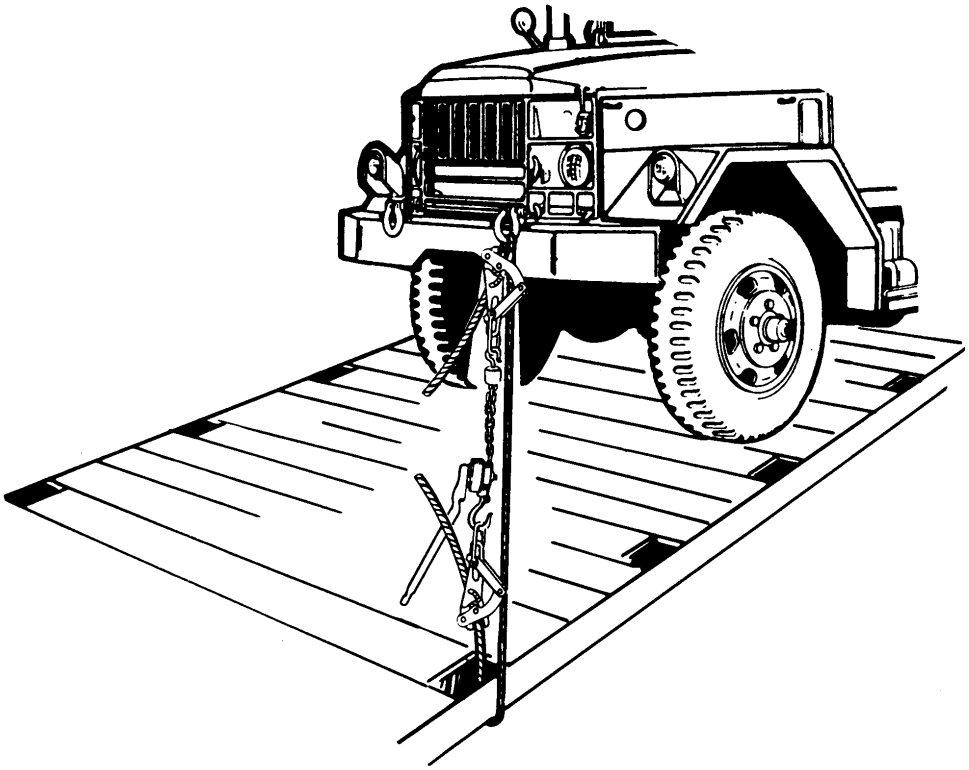

Figure 20-13. Chain hoist with grippers in use

Downloaded from http://www.everyspec.com

(3) ***Cable clamps.*** Once the proper tension has been applied, the cable clamps should be attached. When using U-shaped clamps, the U part of the clamp goes over the free (dead) end of the cable loop (Figure 20-14). Cable clamps must be spaced about six times the diameter of the cable. There must be at least 12 inches of the free end from the last cable clamp. Cables should be strung at a 45 degree angle from the vehicle to the car floor when viewed from the side of the car as shown in Figure 20-13. This angle provides optimal restraint forward, aft, and lateral. For proper cable use, one must be able to form loops. Figure 20-14 shows an arrangement of cable clamps for a complete loop. Four clamps are used and the cable has two free ends. With the U part of the clamps over the free ends, the result is two clamps facing one way and two the other. Tighten 1/2-inch clamps to 35 foot-pounds torque. Tighten 5/8-inch clamps to 50 foot-pounds torque.

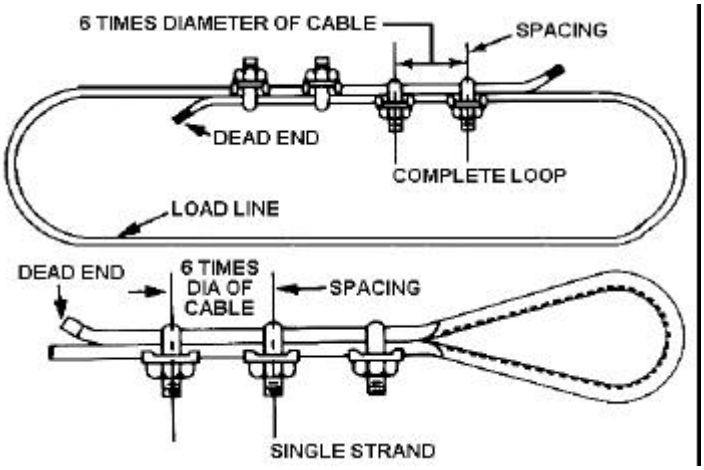

Figure 20-14. Cable secured with cable clamps

(4) ***Shackles.*** Shackles must be installed in all tie-down provisions. "T" hooks must be removed and replaced by screw-pin anchor shackles. Bolts of unknown strength must not be used in place of shackle pins.

g. ***Chain Tie-Down Devices.*** The different devices to secure vehicles are as follows:

(1) The 68-foot DODX flatcar uses a heavy-duty load securement system. Four steel flush-mounted channels run its entire length. Each anchor has a load binder (turnbuckle) that connects to a 1/2-inch alloy chain. When in use, a vehicle is driven or rolled to the appropriate place on the flatcar, where it is secured by conveniently placed chains. The slack is removed and the chain tightened at the load binder. MTMCTEA Pamphlet 55-19 provides detailed guidance on tie-down devices. The 68-foot, 140-ton DODX tie-down device is shown in Figure 20-15. Chains, shackles, and rings on empty cars must be secured to the flatcar so they will not become free and can be accounted. Figure 20-16, page 20-18 shows the general arrangement of the tie-

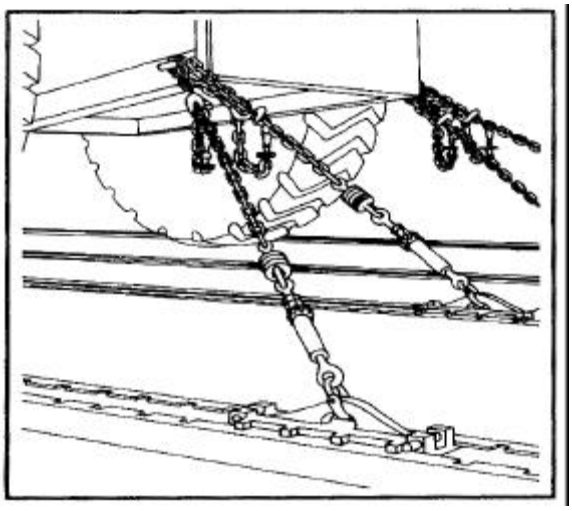

Downloaded from http://www.everyspec.com

down devices.

Figure 20-15. DODX tie-down device

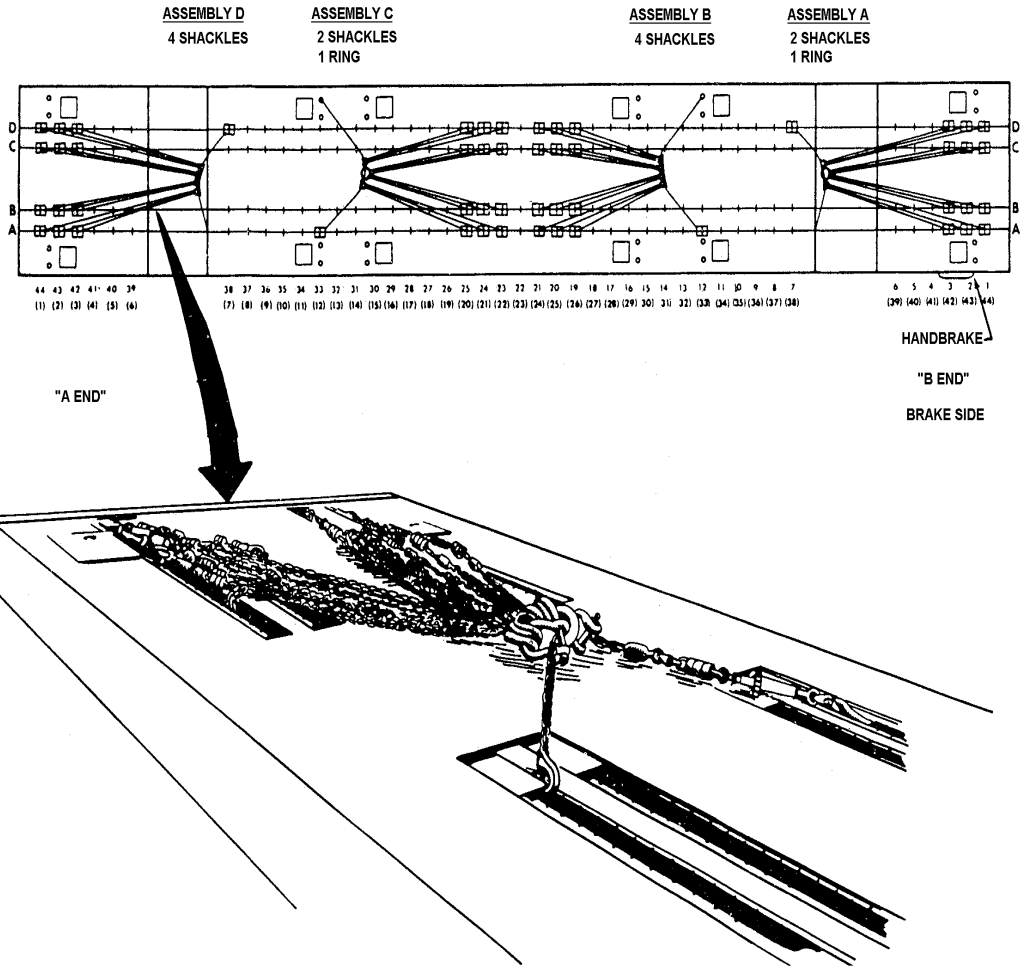

Figure 20-16. Securing tie-down chains and hardware on the 140-ton DODX flatcar

(2) The 60-foot HTTX flatcar has heavy-duty turnbuckles and chains in its four channels. The tie-down system consists of retractable tie-down anchors equipped with chain assemblies that have a load binder, a heavy compression unit, an adjustable grab hook, and a 1/2-inch alloy chain. The car may come equipped with heavy-duty chains and anchors as shown in Figure 20-17. The HTTX flatcar is shown in Figure 20-18.

(3) Use heavy-duty turnbuckles and 1/2-inch chains with stake pockets with the 60-foot TTHX flatcars (Figure 20-19). The chains are attached to castings that are retained in the side stake pockets of the car. The 60-foot TTHX flatcar is still in service but has been replaced by the HTTX flatcar.

Downloaded from http://www.everyspec.com

(4) Designed as a farm equipment car, the 60-foot OTTX flatcar has many military applications. The car has four tie-down channels, two along the sides of the car and two down the center. The movable and retractable ratchet winches are usually equipped with chain tie-down assemblies and a 3/8-inch alloy chain. The flatcar also uses the 360-degree saddleback winch (Figure 20-20).

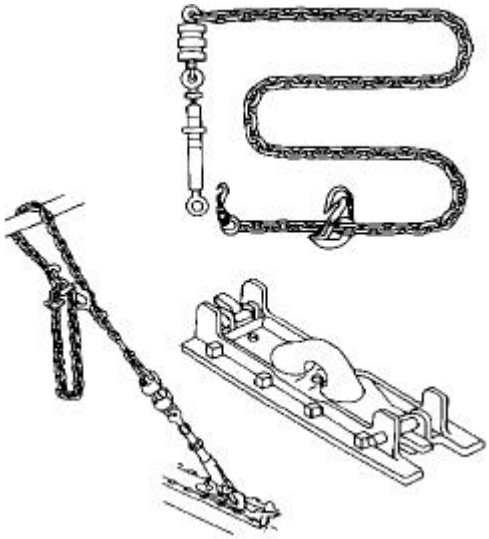

Figure 20-17. Heavy-duty chains and anchors

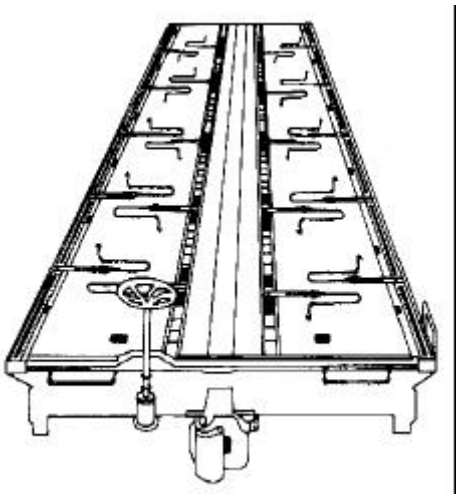

Figure 20-18. Flatcar, 60-foot, HTTX

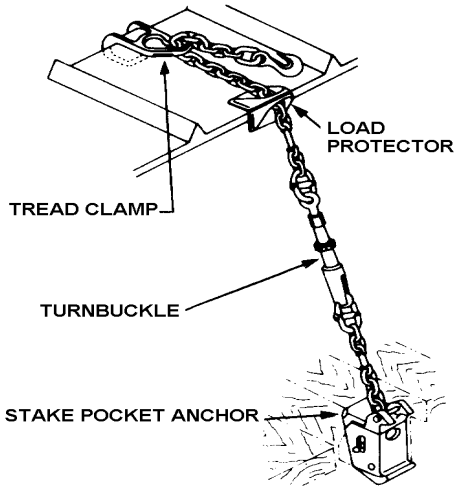

Figure 20-19. Stake pocket anchor

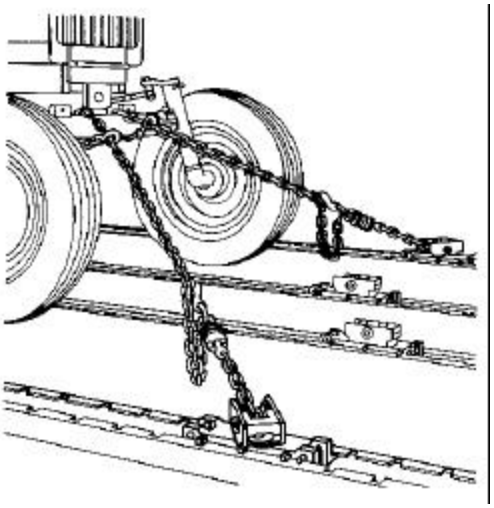

Figure 20-20. Saddleback winch, 360-degree

Downloaded from http://www.everyspec.com

(5) The 89-foot TTDX flatcar (Figure 20-21) is normally used for DOD equipment. This flatcar is equipped with 15 movable screw-type winches and a 1/2-inch alloy chain and can transport military vehicles saddleback or flat style.

(6) The 89-foot ITTX flatcar has pedestal equipment for loading trucks saddleback style. The car uses a saddleback winch with a 3/8-inch chain. The saddleback winch offers a 360-degree retractable feature. When in use, the winch is raised and locked in place in the channel. The chains are then attached to key points on the vehicle and wrenched tight at the winch. The ability of the winch top to swivel permits straight-line tension from load to winch and provides uniform load distribution in the channel (Figure 20-22). The saddleback winch does not rotate but features double panel drum securement, a chain pocket cast in the drum, and automatic channel locking. The ITTX flatcar, as shown in Figure 20-23, has two inboard "low profile" anchor channels in which the winch and chain assembly operate.

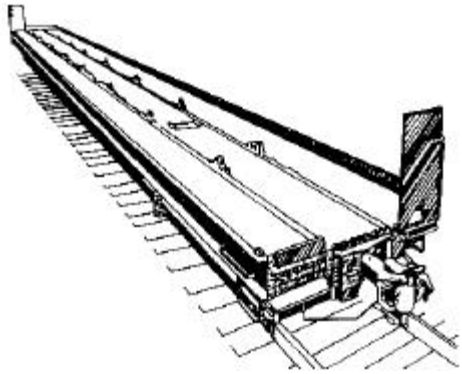

Figure 20-21. Flatcar, 89-foot TTDX

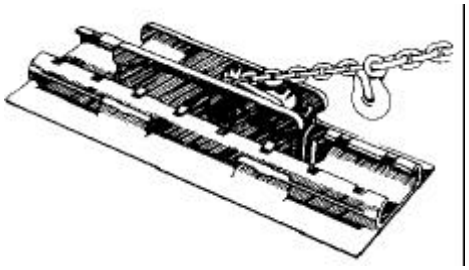

Figure 20-22. Saddleback winch

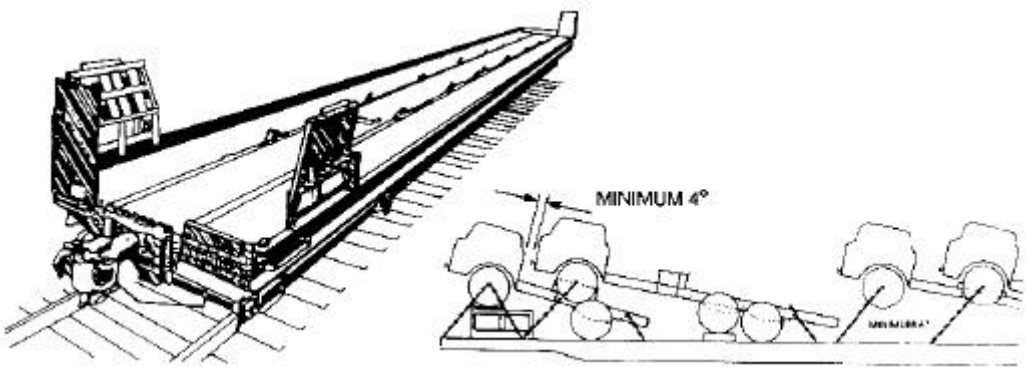

Figure 20-23. Flatcar, ITTX 89-foot (saddleback flatcar)

Downloaded from http://www.everyspec.com

20-10. MULTILEVEL FLATCARS. Multilevel flatcars are 89 feet long; they use chain tie-down devices and are two or three decks high. Some of these rail cars come with fixed protective screening with both open and closed tops. Other bi-level or tri-level cars are completely open. Figures 20-24 and 20-25 show a typical bi-level enclosed flatcar and an open tri-level 89-foot flatcar.

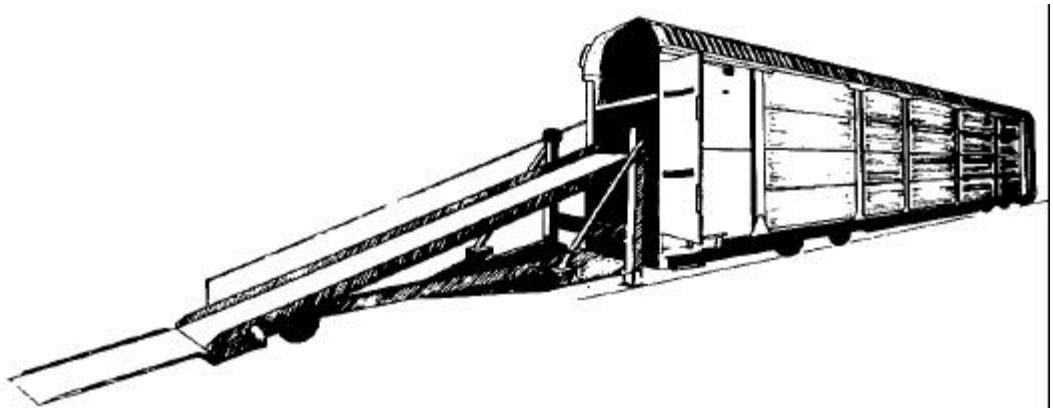

Figure 20-24. Bi-level enclosed 89-foot flatcar

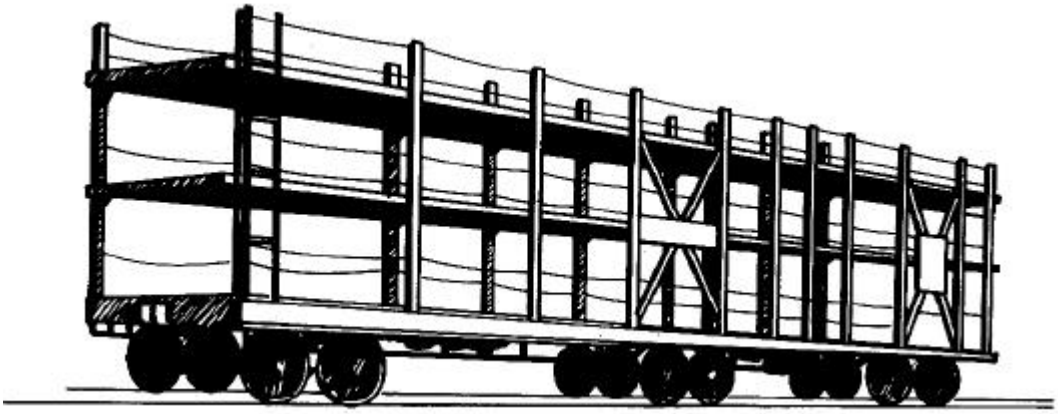

Figure 20-25. Open tri-level 89-foot flatcar

20-11. CHAIN SECUREMENT. The different methods of securing chains are discussed below.

a. **Chain Strength.** Chain strength is stenciled (Figure 20-26, page 20-22) on the chain-tie-down car or may be obtained from the railroad representative at the loading site. At least one link in every 5 feet of chain carries the manufacturer's mark or symbol identifying the grade of

Downloaded from http://www.everyspec.com

chain. Table 20-1, page 20-22 shows the most common chain securement flatcars and the capacity chain needed for each.

No. Chain Tie-Down _____

Chain Size (Diameter & Type) and Length of Assembly _____

Work Load Limit _____

Figure 20-26. Railcar tie-down chain stencil

Table 20-1. Types and capacities of chain securement flatcars

Type	Length	Capacity (lb)
DODX	68	148,200 – 155,500*
HTTX	60	148,200 – 162,500*
TTHX	60	149,000 – 155,500*
OTTX	60	280,000
TTDX	89	135,000
ITTX	89	135,000

* This type of flatcar has varying capacities.

b. **Number of Chains Required.** The number of chains required varies depending on the type of vehicle or cargo as indicated below.

(1) Wheeled and tracked vehicles must have a minimum of four chains, two in each direction. Chains are applied so they provide the greatest restraint against longitudinal movement.

(2) Containers, CONEXs, or boxes must have a minimum of three chains. Chains are applied over the top of the load and set at a right angle to the side of the car whenever possible. To compute the number of chains required, use the following formula:

$$\text{Chains required} = \frac{\text{cargo weight}}{\text{chain strength}} \times 2$$

Downloaded from http://www.everyspec.com

NOTE: Methods of chain application are also shown in TM 55-2200-001-12 and the AAR general rules book.

c. **Chain Application.** Vehicle chains are applied in pairs and parallel to each other. Do not attach chains in a vertical position. The angle between the chain and the car deck must not exceed 45 degrees when viewed from the side. Chains must not kink, twist, or cross. (The shackles and shackle mounts are not designed to be pulled from an oblique angle and thus will not hold their rated strength.)

d. **Chain Hooks.** Chain hooks must be secured with wire. Wire must be passed through the chain link and the throat of the hook and fastened on the backside of the hooks (Figure 20-27). Do not apply wire around the open end of the hooks. Without the wire, the hook will fall off because of slack action during transit.

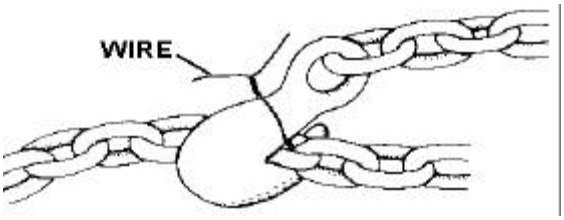

Figure 20-27. Chain hook secured with wire

e. **Chain Anchors.** Anchors must be completely seated in the channel notches. Insert and tie wire in the hole provided in the chain ratchets, to ensure that the keeper stays engaged (Figure 20-28).

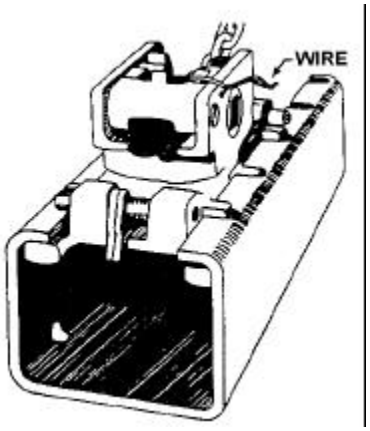

Figure 20-28. Anchor seated and ratchet keeper secured with wire

f. **Turnbuckles.** Unless equipped with self-locking devices, turnbuckles used to tighten chains must be wired or loaded to prevent turning during transit. Figure 20-29, page 20-24 shows a jam nut secured against a turnbuckle. Turnbuckles should be tightened to leave a 1/8-inch space between metal points of the compression units. Chains must be tightened evenly all around.

Downloaded from http://www.everyspec.com

20-12. CHAIN SECUREMENT OF A 2 1/2-TON TRUCK. Cargo handlers must ensure that trucks are properly secured. Figure 20-30, page 20-24 explains the procedures to follow when securing a 2 1/2-ton truck to a flatcar.

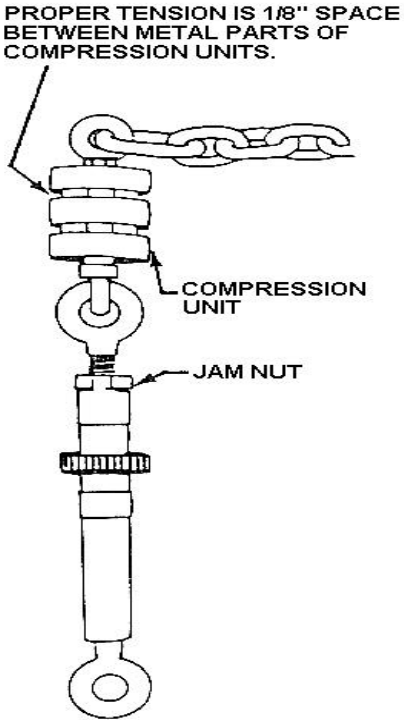

Figure 20-29. Turnbuckle with jam nut and compression unit

Downloaded from http://www.everyspec.com

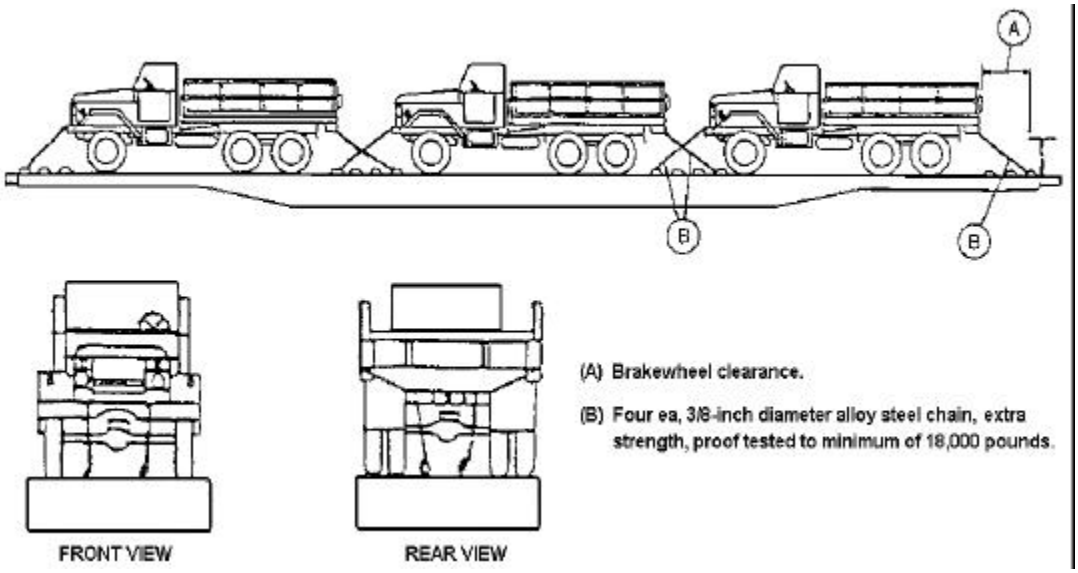

Figure 20-30. Chain securement of a 2 1/2-ton truck

Downloaded from http://www.everyspec.com

APPENDIX A

CONVERSION FACTORS

Terminal operations personnel must be able to solve various types of mathematical problems that arise pertaining to the proper and effective handling, stowing, shipping, and discharging of military cargo. To make this task easier and to ensure correct answer and results, numerous tables are available. Basic conversion Tables A-1 through A-4 are included in this appendix.

Table A-1. Linear measurement

				Miles			
Meters*	Inches	Feet	Yards	Statute	Nautical**	Kilometers	Fathoms
1.0	39.37	3.28083	1.09361	0.0006214	0.0005396	0.001	0.546
0.0254	1.0	0.0833	0.0278	0.00001578	0.00001371	0.0000254	0.0139
0.3048	12.0	1.0	0.3333	0.0001894	0.0001645	0.0003048	0.167
0.9144	36.0	3.0	1.0	0.0005682	0.0004934	0.0009144	0.500
5.0292	198.0	16.5	5.5	0.003125	0.002714	0.005029	2.76
20.1168	792.0	66.0	22.0	0.0125	0.01085	0.02012	11.0
1,609.35	63,360.0	5,280.0	1,760.0	1.0	0.8684	1.6094	879.0
1,853.25	72,962.5	6,080.2	2,026.73	1.15155	1.0	1.85325	1,010.0
1,000.0	39,370.0	3,280.83	1,093.61	0.6214	0.5396	1.0	546.0
219.5	8,640.0	720.0	240.0	0.1364	0.1184	0.2195	120.0
1.829	72.0	6.0	2.0	0.00114	0.00098	0.00183	1.0

* 1 meter = 10 decimeters = 100 centimeters = 1,000 millimeters
** A nautical mile is the length on the earth's surface of an arc subtended by one minute of angle at the center of the earth. Therefore, the circumference of the earth is equivalent in nautical miles to the number of minutes in a circle (360 x 60 = 21,600).

Table A-2. Surface measurement

Square meters	Square inches	Square feet	Square yards	Square rods	Square miles (statute)	Square kilometers
1.0	1,550.0	10.764	1.196	0.03954	0.000000386	0.000001
0.00065	1.0	0.0069	0.00077	0.00000026	0.00000000025	0.00000000065
0.0929	144.0	1.0	0.1111	0.00367	0.0000000359	0.0000000929
0.8361	1,296.0	9.0	1.0	0.0331	0.000000323	0.000000836
25.293	39,204.0	272.25	30.25	1.0	0.00000977	0.0000253
4,046.8	6,272,640.0	43,560.0	4,840.0	160.0	0.00156	0.00405
10,000.0	15,499,969.0	107,639.0	11,960.0	395.37	0.00386	0.01
2,589,999.0	Sq ft x 144	27,878,400.0	3,097,600.0	102,400.00	1.0	2.59
1,000,000.0	Sq ft x 144	10,763,867.0	1,195,985.0	39,537.0	0.3861	1.0

Downloaded from http://www.everyspec.com

Table A-3. Cubic and volume measurements

Cubic centimeters	Cubic inches	Cubic feet*	Cubic yards	US gallons Liquid	US gallons Dry	US bushels	Measurement tons
1.0	0.061	0.0000353	0.0000013	0.000264	0.000227	0.000028	0.00000088
1,000.0	61.023	0.0353	0.00131	0.2642	0.227	0.0284	0.000882
16.39	1.0	0.0005787	0.0000214	0.00433	0.00372	0.00465	0.0000144
28,317.0	1,728.0	1.0	0.03704	7.481	6.4285	0.80356	0.025
764,559.0	46,656.0	27.0	1.0	201.974	173.57	21.696	0.677
964.4	57.75	0.03342	0.00124	0.25	0.2148	0.02686	0.000837
1,101.2	67.201	0.03889	0.00144	0.2909	0.24	0.0313	0.000975
3,785.4	231.0	0.13368	0.00495	1.0	0.8594	0.1074	0.00335
4,404.9	268.803	0.15556	0.00576	1.1636	1.0	0.125	0.00388
35,239.3	2,150.42	1.0461	0.0461	9.3092	8.0	1.0	0.0312
1,130,000.0	69,120.0	40.0	1.48	298.0			

* A board foot, used in measurements for lumber, measures 12” x 12” x 1”. Its volume is 1/12 of a cubic foot.
US dry measure: 1 bushel = 4 pecks = 8 gallons = 32 quarts = 64 pints
US liquid measure: 1 gallon = 4 quarts = 8 pints = 32 gills = 128 fluid ounces = 0.83268 imperial gallon

Table A-4. Weight measurement

Kilograms (kg)	Ounces Troy	Ounces Avoirdupois (avdp)	Pounds Troy	Pounds Avoirdupois	Tons short (2,000 lb)	Tons long (2,240 lb)	Metric (1,000 kg)
1.0	32.1507	35.274	2.67923	2.20462	0.001102	0.0009842	0.001
0.0000648	0.002083	0.0002286	0.0001736	0.0001429	0.00000007	0.00000006	0.00000006
0.0311	1.0	1.09714	0.08333	0.06857	0.00003429	0.00003061	0.0000311
0.02385	0.91146	1.0	0.07595	0.0625	0.00003125	0.0000279	0.00002835
0.37324	12.0	13.1657	1.0	0.82286	0.0004114	0.0003674	0.0003732
0.45359	14.5833	16.0	1.21528	1.0	0.0005	0.0004464	0.004536
907.185	29,166.7	32,000.0	2,430.56	2,000.0	1.0	0.89286	0.90719
1,016.05	32,666.7	35,840.0	2,722.22	2,240.0	1.12	1.0	1.01605
1,000.0	32,150.7	35,274.0	2,679.23	2,204.62	1.10232	0.98421	1.0

Downloaded from http://www.everyspec.com

APPENDIX B

WARNING LABELS

This appendix contains a complete description of all hazardous cargo labels as referenced in Chapter 13.

KEY

Orange Red Yellow Green Blue

EXPLOSIVES

RADIOACTIVE MATERIALS

Downloaded from http://www.everyspec.com

FLAMMABLE LIQUIDS AND SOLIDS

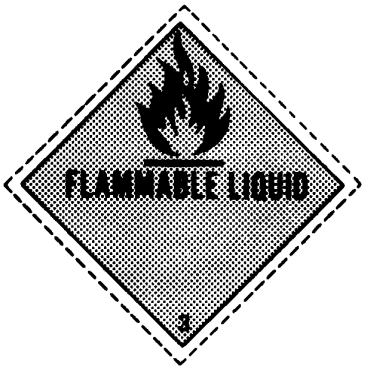

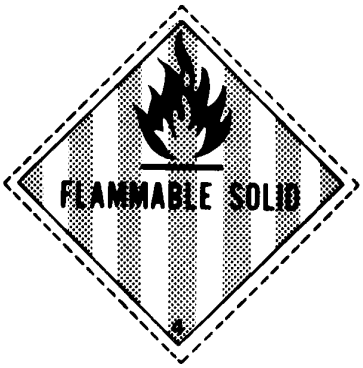

COMPRESSED GASES

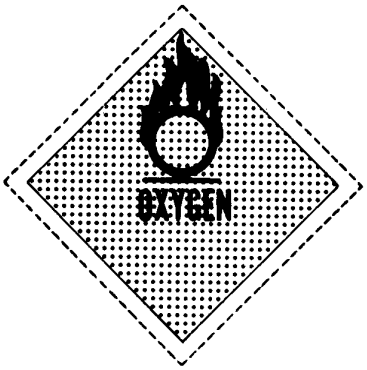

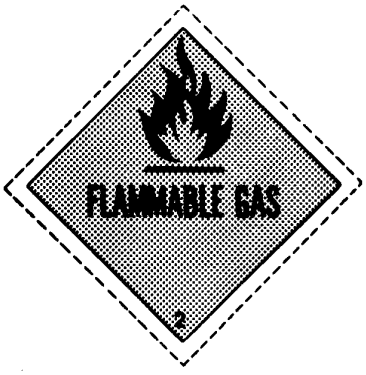

Downloaded from http://www.everyspec.com

OXIDIZING MATERIALS

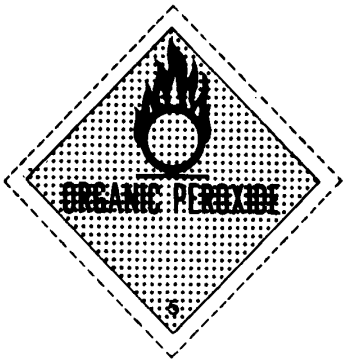

SPONTANEOUSLY COMBUSTIBLE MATERIAL

WATER-REACTIVE MATERIAL

IRRITATING MATERIAL

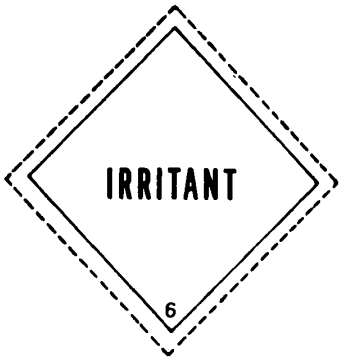

Downloaded from http://www.everyspec.com

POISONOUS MATERIALS

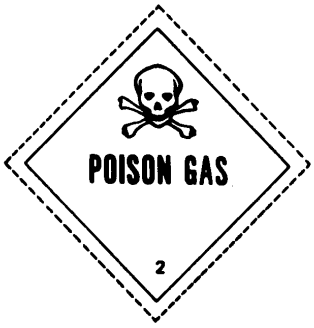

CORROSIVE MATERIAL

EMPTY

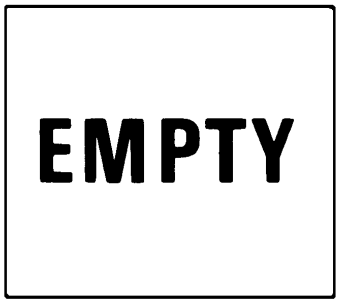

ETIOLOGIC AGENT*

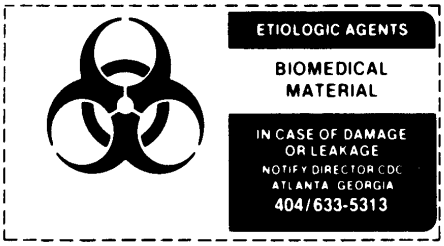

*DISEASE CAUSING CHEMICALS OR ORGANISMS

NOTE: Label has white background; red appears black.

BUNG*

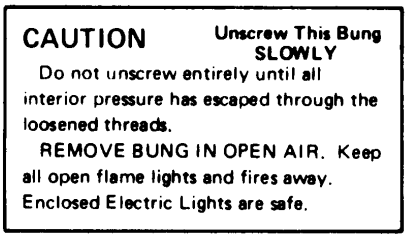

*USED TO RELIEVE INTERIOR PRESSURE IN PRESSURIZED CONTAINERS

Downloaded from http://www.everyspec.com

GLOSSARY

AACG	arrival airfield control group
AAR	American Association of Railroads
ABS	American Bureau of Ships
ACL	allowable cabin load
A/DACG	arrival/departure airfield control group
AFR	Air Force Regulation
ALCE	affiliated airlift control element
AMC	Air Mobility Command
ANSI	American National Standard Institute
APU	auxiliary power unit
BBP	break-bulk point
BD	barge, derrick
BS	breaking strength
C	circumference
CB	center of balance
CCSA	container cargo stowage adapter
CDWT	cargo deadweight tonnage
CF	cubic foot
CFR	Code of Federal Regulation
CG	center of gravity
CHE	container handling equipment
CLP	container load plan
cm	centimeter
CNO	Chief of Naval Operations
COFC	container on flatcar
COMSEC	communication security
CONEX	container express
CONUS	continental United States
CSC	convention for safe containers
CSF	compartment stowage factor
cu	cube
CUCV	commercial utility cargo vehicle
D	diameter
DACG	departure airfield control group
DCC	damage control central
DIC	Document Identifier Code
DISREP	Discrepancy in Shipment Report
DOD	Department of Defense
DODX	government-owned railcar
DOT	Department of Transportation
DTS	Defense Transportation System
ea	each
el-hydr	electric-hydraulic
EOS	enclosed operating system
ETA	estimated time of arrival
F	friction
FAW	front axle weight
FM	frequency modulation

Downloaded from http://www.everyspec.com

FMFM	fleet marine field manual
FOH	front overhang
FRP	fiberglass reinforced plywood
FSS	fast sealift ship
ft	feet
G	acceleration of gravity
GAA	General Agency Agreement
GTS	government transfer service
GW	gross weight
HICHS	helicopter internal cargo-handling system
HNS	host nation support
HQ	headquarters
IMCO	Intergovernmental Maritime Consultive
IMDG	International Maritime Dangerous Goods
in	inches
ISO	International Standardization Organization
ITO	installation transportation officer
JCS	Joint Chief of Staff
kg	kilogram
LACV	lighter amphibian aircushion vehicle
LARC	lighter amphibious resupply cargo
LASH	lighter aboard ship
lb	pound
LCM	landing craft, mechanized
LCU	landing craft, utility
LO/LO	lift-on/lift-off
LOTS	logistics-over-the-shore operation
L/T	loaded trim
LTON	long ton
LWL	load waterline length
MA	mechanical advantage
MAB	marine amphibian brigade
MAC	Military Airlift Command
MANPCS	manifested pieces
MARAD	Maritime Administration
max	maximum
MCA	movement control agency
MCC	movements control center
MCO	movements control officer
MDA	main deck raft
MHE	materials-handling equipment
MILSTAMP	Military Standard Transportation and Movement Procedures
MIL-STD	Military Standard
MILSTRIP	Military Standard Requisitioning Procedures
MILVANs	military-owned demountable container
MLW	mean low water
MIN	minimal
MOTBA	Military Ocean Terminal, Bay Area
MOTBY	Military Ocean Terminal, Bayonne
MOTSU	Military Ocean Terminal, Sunny Point
MPH	miles per hour

Downloaded from http://www.everyspec.com

MPS	maritime pre-positioning ships
MRS	mobility requirements study
MSC	Military Sealift Command
MST	mission support team
MT	measurement ton
MTMC	Military Traffic Management Command
MTON	metric ton
NATO	North Atlantic Treaty Organization
NBC	nuclear, biological, chemical
NCA	National Command Authority
NCO	noncommissioned officer
NDRF	National Defense Reserve Fleet
no.	number
NTPF	near term pre-position force
OAK	Oakland, California
POD	port of debarkation
POE	port of embarkation
POL	petroleum, oils, and lubricants
PSA	port support activity
psf	pounds per square foot
psi	pounds per square inch
PVR	portable vehicle ramp
RAW	right axle weight
RDD	required delivery date
RDL	reference datum line
ROH	rear overhand
RO/RO	roll-on/roll-off
ROS	reduced operational status
RRF	Ready Reserve Force
RTCC	rough terrain container crane
RTCH	rough terrain container-handler
S	summer loadline
SEABEE	sea barge
SEF	sealift enhancement features
SF	safety factor; standard form
SHP	strain on hauling part
SPOD	sea port of debarkation
SPOE	sea port of embarkation
STON	short ton
SWL	safe working load
TACS	containerships and crane ships
TALCE	Tanker Airlift Control Element
TCMD	transportation control and movement document
TCN	transportation control number
TF	tropical freshwater loadline
TIR	transport internationale des routiers
TOE	table(s) of organization and equipment
TOFC	trailer on flatcar
TOPNS	theater of operations
TRADOC	Training and Doctrine Command
TSC	Theater Support Command

Downloaded from http://www.everyspec.com

TTB	Terminal Transportation Brigade
TTU	Terminal Transportation Unit
TW	total weight
UMO	unit movement officer
UN	United Nations
USTRANSCOM	US Transportation Command
VLA	vehicle lashing assemblies
VSF	vessel stowage factor
wt	weight
WB	wheel base
WCA	water clearance authority
WNA	winter North Atlantic loadline
WTD	watertight door
WWII	World War II
YOK	Yokahama, Japan

Downloaded from http://www.everyspec.com

REFERENCES

SOURCES USED

These are the sources quoted or paraphrased in this publication.

AMC Pamphlet 36-1. *Training, AMC Affiliation Program Airlift Planners Course.* 15 March 1995.

AR 55-355. *Defense Traffic Management Regulation.* 31 July 1986.

CFR 46. *Shipping.*

CFR 49. *Transportation.*

DOD Regulation 4500.9-R, Part III. *Department of Defense Transportation Regulation (Mobility).* April 1997.

DOD Regulation 4500.32-R, Volume 1. *Military Standard Transportation and Movement Procedures (MILSTAMP).* 15 March 1987.

FM 55-9. *Unit Air Movement Planning.* 5 April 1993.

FM 55-50. *Army Water Transport Operations.* 30 September 1993.

FM 55-60. *Army Terminal Operations.* 15 April 1996.

FM 55-450-2. *Army Helicopter Internal Load Operations.* 5 June 1992.

MIL-STD-129. *Marking for Shipment and Storage.* 25 September 1984.

MTMCTEA Pamphlet 55-19. *Transportation and Travel, Tiedown Handbook for Rail Movements (Third Edition).* March 1995.

MTMCTEA REF 96-55-23. *Transportation and Travel, Containerization of Military Vehicles.* August 1996.

T-AKR 295 Class. *Cargo Operations Manual.* 5 December 1994.

T-AKR 296 Class. *Cargo Operations Manual.* 5 December 1994.

TM 5-725. *Rigging.* 3 October 1968.

TM 38-250. *Preparing Hazardous Materials for Military Air Shipments (AFJM 24-204; NAVSUP Pub 505; MCO P4030.19G; DLAI 4145.3).* 1 March 1997.

TM 55-601. *Railcar Loading Procedures.* 11 August 1971.

TM 55-607. *Loading and Storage of Military Ammunition and Explosives Aboard Break-bulk Merchant Ships (NAVSEA OP 3221 Rev 2).* 27 December 1988.

Downloaded from http://www.everyspec.com

TM 55-2200-001-12. *Transportability Guidance for Application of Blocking, Bracing and Tiedown Materials for Rail Transport.* 31 May 1978.

Downloaded from http://www.everyspec.com

INDEX

Address markings, 13-3
Air Mobility Command, 16-1
Aircraft, 16-1 through 16-7
    C-130, 16-2
    C-141, 16-3
    C-17, 16-5
    C-5 Galaxy, 16-4
    KC-10A, 16-6
    loading unit's responsibilities, 16-8
    palletized cargo restrictions, 16-2 through 16-7
    rolling stock restrictions, 16-3 through 16-7
    safety, 16-11 through 16-13
    troop commander's responsibilities, 16-9
Alarm and indicator systems, 2-19
    carbon monoxide and combustible gas alarm, 2-19
    flooding alarms, 2-20
    smoke and heat-detection alarm, 2-20
    ventilation alarm, 2-19
Arrows, special markings, 13-4
Block-in-bight rigging, 3-37
Blocking, 20-14
Blocks, types of, 6-2
    fixed-hook, 6-2
    head or heel, 6-3
    multiple-sheave, 6-2
    single-sheave, 6-2
    snatch, 6-3
    swivel-hook, 6-3
Bottom lifting, 13-10
Boxcars, 20-7
Bridles, 4-6
Bulkheads, 9-15
Cargo hold dewatering system, 2-19
    fire, 2-19
    flooding/collision, 2-19
    fuel spill, 2-19
Cargo hold drainage systems, 2-18
    cargo hold dewatering, 2-19
    oily waste transfer , 2-19
Cargo load planning, 7-12
Cargo stowage plan, 7-27
    backstays, 3-5
    bail plate, 3-7
    bitts, 3-8
    booms, 3-11 through 3-13
    bull chain, 3-7
    bull rope, 3-7
    cargo tallying methods, 8-25 and 8-26

Downloaded from http://www.everyspec.com

chains,
chocks, 3-8
cleats, 3-8
clamps, 20-17
compartments, 2-2
deck fittings, 3-8
fairleads, 3-8
gooseneck, 3-7
guy pendant, 3-7
guy tackle, 3-7
head block, 3-7
heel block, 3-7
hoisting wire, 3-5
inboard guys, 3-7
king posts, 3-4
link band, 3-8
multiple topping lift, 3-6
outboard guys, 3-7
pad eyes, 3-8
prestowage plan, 7-17
preventer, 3-7
shrouds, 3-4
single topping lift, 3-6
stays, 3-5
stopper chain, 3-13
stowage areas, 2-15
topping-lift cleats, 3-7
turnbuckles, 3-5
Cargo tension, 20-16
Cargo, rules for stowing, 8-16
Cargo, securing of, 8-16
blocking and bracing, 8-22, 9-1, 20-12
deck, 8-18, 9-10
dunnage, 8-20, 9-14
lashing, 8-16
Cargo-handling operations, 8-1, 11-21
Center of gravity, 17-10
Chain securement, 20-21
chain anchors, 20-23
chain application, 20-22
chain hooks, 20-23
chain strength, 20-21
number of chains, 20-22
turnbuckles, 20-23
Compressed air, 2-18
Container construction, 15-1
aluminum, 15-2
reinforced plywood (FRP), 15-2
steel, 15-1
Container handlers, 5-9
Container inspection steps, 15-5

Downloaded from http://www.everyspec.com

Container receptacles, 2-18
Container securing, 13-7
    equipment used, 13-7 through 13-9
Container special markings, 13-4 through 13-7
Container stuffing, 12-1
Container tallying, 14-9
Container terminals, 1-2
Container, dry cargo, open-top, 15-1 through 15-3
Container, flatrack, 15-3
Container, lift methods, 13-9
    bottom lift, 13-10
    other methods, 13-11
    top lift, 13-9
Containerized loads, 19-3
Containership operations, 13-1
    labeling and handling, 13-2 through 13-4
Conversion factors, A-1 and A-2
Cordage, 6-16
    marline, 6-16
    twine, cotton, 6-16
    twine, sail, 6-16
Crane operations, 5-7
Cranes, types of, 5-4
    floating, 5-5
    gantry, 5-6
    rough-terrain, 5-5
    straddle, 13-1
    truck-mounted, 5-6
Date of requisition, 14-5
Deadweight tonnage, 7-7
Deck fittings, 3-8
Discharge, 7-34
    lighter, 7-35
    over wharves, 7-34
    planning, 7-34
Displacement, 7-7
Documentation element, 14-10 and 14-11
Documentation identifier code, 14-2
Dolly, helicopter positioning, 5-7
Doubling-up, 3-29, 3-35 and 3-36
Draft marks, 7-3
Draft, 7-3
Draglines, 8-3, 8-5
D-rings, 2-12
Ebel rig, 3-25
Explosives, 19-5
Farrel rig, 3-24
Fiber line, 6-14
    characteristics, 6-14
    cordage, 6-16
    inspection, 6-16

Downloaded from http://www.everyspec.com

Fire extinguishing system, 2-17
Fire lanes, 8-52
Fixed port facilities, 1-1
Flammable liquids, 19-5
Flatracks, 2-11
Forklift trucks, types of, 5-1
    commercial, 5-1
    electric, 5-1
    rough-terrain, 5-1
Friction, 6-7
Gear, 4-1
    cargo-handling, 4-8
    general-purpose, 4-1
    special-purpose, 4-4
General ship characteristics, 2-14
    T-AKR 295 and 296 class ship configurations, 2-14 through 2-19
Gooseneck tunnel, 2-12
Grapple lift, 13-12
Guy, equalizing, 3-16
    positioning, 3-18
Guying booms, 3-16 through 3-23
Hagglunds crane, 3-40
    hand signals, 3-44 and 3-45
    operation, 3-41
Hand trucks, 5-4
Handling aids, cargo, 4-8
    rollers, 4-8
    tag lines, 4-9
    wedge point bars, 4-8
Hatch gang, 3-13
Hatch tents, rigging, 3-27
    seattle, 3-27
Hatch, double-rigged, 3-37, 3-39
Hatches, opening and closing, 11-3
Hazardous cargo, 9-1
    deck stow securing, 9-10
    encasement, 9-3 and 9-19
    loading procedures, 9-3
    magazine stowage, 9-5
    open-hold guardrail, 9-25
    stowage of bombs and missiles, 9-7
    stowage of explosives, 9-6 through 9-25
    stowage procedures, 9-7 through 9-10
    tomming, 9-1, 9-2, 9-7, 9-10, 9-23, 9-24
Heavy lifts, 3-28, 8-3
Helicopter internal cargo-handling system, 18-9
Hitch, clove, 6-21
Hitch, half, 6-21
Hitch, stopper, 6-22
Hooks, types of, 3-1
    cargo, 3-1

Downloaded from http://www.everyspec.com

sling, 3-2
Idler cars, 20-11
Inland terminal, 1-2
Inspection completion, 15-7
Jacks, pallet, 5-4
Jacob's ladder, 11-3
Joint Chiefs of Staff (JCS), 2-4
Jumbo boom , 3-30 through 3-36
signals, 3-33
Knots, 6-19
bowline, 6-20
figure eight, 6-19
french bowline, 6-20
overhand, 6-19
square, 6-19
LASH and SEABEE operations, 10-5
Lift-off operations, 8-53
aft section, 8-53
forward, 8-58
midsection, 8-57
Lift-on operations, 8-37
aft section, 8-37 through 8-43
forward section, 8-45
midsection, 8-44
Lighting, 2-18
Line, fiber, 6-14
hemp, 6-14
manila, 6-14
nylon, 6-14
sisal, 6-14
Line, uncoiling, 6-17
Line, whipping, 6-17
Line-haul, 19-1
Loading rules, 19-1
Loading, general data, 16-1
Loading, specific data, 16-2
Local haul, 19-1
LOTS operation, 10-1
Lowering booms, 3-15
Marine amphibious brigade (MAB), 2-4 and 2-7
Maritime administration classification systems, 2-4
Maritime pre-positioning ships, 2-4
Markings, 7-5, 15-6
loadline, 7-5
plimsoll, 7-5
Markings, special, 13-4
commodity category markings, 13-5
hazardous material, 13-4
precautionary and special handling instructions, 13-4
Marlinespike Seamanship, 6-14
Metal blocks, 6-1

Downloaded from http://www.everyspec.com

Military Sealift Command, 1-6, 1-8
Military traffic management command, 1-9
Miscellaneous systems, 2-20
    ammunition and small arms stowage, 2-20
    cargo batteries facilities, 2-21
    fresh water for vehicles, 2-21
    helicopter landing facility, 2-21
    list control, 2-20
    refueling station, 2-20
    vehicle washdown stations, 2-21
Motor transport, 19-1
Multiple-topping lift booms, 3-13, 3-15
Navy Rapidly Deployable Medical Facility, 2-7
Navy Strategic Sealift Program, 2-4
Nets, cargo, 4-4
Ocean water terminal, 1-1
Oily waste transfer system, 2-19
Open-top cars, 20-4
Pallet jacks, 5-4
Palletization, multi, 18-5
Palletized cargo, 12-1
Palletized loads, 19-3
Palletized loads, stowage of, 8-2
Pallets, 4-4, 18-1
    463L, 18-1
    loading, 18-1
    securing, 18-3
Plate-handling clamps, 4-7
Plates, pie, 4-4
Pontoon, 2-9
Port operation cargo detachment, 1-6
Prepositioned shipping, 2-4
Rail cars, unitized cargo loading, 20-8
    containers, 20-9
    palletized, 20-8
    semitrailers, 20-9
    small trailers, 20-9
    towed artillery, 20-9
Rail equipment, 20-1
Rail planning, 20-2
Rain tents, 11-17
Ready Reserve Force, 2-13
Receptacles, 2-18
Refrigerated cargo, 8-12
Rejection criteria, 15-3
    for rear end and door assembly, 15-4
Restrictions, 16-2 through 16-7
    palletized cargo, 16-2 through 16-7
    rolling stock, 16-3 through 16-7
Resupply shipping, 2-7
Rigging hatch tents, 3-27

Downloaded from http://www.everyspec.com

Rigging save-alls, 3-28
Rigging systems, 3-24
    ebel, 3-25
    farrel, 3-24
    west coast, 3-26
    wing-and-wing, 3-27
    yard-and-stay, 3-24, 3-36
Riggings, types of, 3-4
    running, 3-5
    standing, 3-4
RO/RO, 1-2, 8-35
    system, 8-35
    terminals, 1-2
    vehicle operations, 8-36
Roofing check, 15-7
Running rigging, 3-5
Safety, 8-34, , 11-1, 16-11
    first aid and life saving equipment, 11-25
    handling cargo, 11-7, 11-21
    handling hazardous cargo, 11-23
    hatch covers, 11-5
    using ship's gear, 11-7
    vessel access, 11-1
    working conditions, 11-24
Sea sheds, 2-8
Sealift enhancement features program, 2-8
Shipboard directions, 2-1
    amidships, 2-1
    bow, 2-1
    inboard, 2-1
    outboard, 2-1
    starboard, 2-1
Shipping categories, 2-4
    prepositioned shipping, 2-4
    resupply shipping
    surge shipping
Ship's gear, 3-1
    chains, 3-1, 11-13
    hooks, 3-1 and 3-2, 11-16
    safety requirements, 11-7
    shackles, 3-3, 11-15, 20-17
Shoring, 18-11
Side blocking, 20-12
Single-topping lift booms, 3-14, 3-16
Slings, 4-1
    canvas, 4-3
    chain, 4-3
    combination, 4-3
    endless, 4-1
    single, 4-2
Splice, 6-22

Downloaded from http://www.everyspec.com

eye, 6-23 and 6-24
hasty eye (Molly Hogan), 6-26
liverpool, 6-27
short, 6-22 and 6-23
Spreaders, 4-5
Standing rigging, 3-4
Storage of, 18-8
nets, 18-8
pallets, 18-8
Stowage factors, 7-2
Straddle trucks, 13-1
Stragetic sealift ship, 1-8s
Surge shipping, 2-7
Tackle, 6-4
double luff, 6-4, 6-6
gun, 6-4, 6-6
luff, 6-4, 6-6
reeving, 6-4
single whip, 6-4
threefold, 6-4, 6-6
twofold, 6-4, 6-6
TACS, 2-7
T-AKR 295 class inboard and outboard profile, 2-16
T-AKR 295, 1-8, 7-19, 7-21, 8-58
dual ramp, 8-59
LO/LO operations, 8-64
RO/RO operations, 8-58
single ramp, 8-62
T-AKR 296 class inboard and outboard profile, 2-17
T-AKR 296, 1-8, 7-19, 7-21, 8-58
dual ramp, 8-65
LO/LO operations, 8-69
RO/RO operations, 8-64
single ramp, 8-68
TCMD (DD Form 1384), 14-2 through 14-9
Terminal battalion, 1-5
Terminal operations, types of, 1-1
inland, 1-2
ocean water, 1-1
safety, 11-1
Terminal organizations in a theater of operations, 1-3
Terminal organizations in the continental United States, 1-3
Theater support command materiel management center, 1-3
Thimbles, 20-15
Tonnage, vessel, 7-1
Tools, splicing, 6-25
Topping booms, 3-13
Topping-lift winches, 3-15
Tractors, 5-3
Trailers, 5-3
Transportation cargo transfer company, 1-5

Downloaded from http://www.everyspec.com

Transportation composite group, 1-3
Trim table, 7-9
Understructure inspection, 15-7
Unitized loads, 19-2
Vehicle measurement, 17-1
    front axle weight, 17-1
    front overhang, 17-1
    gross weight, 17-1
    moment, 17-2
    rear axle weight, 17-1
    rear overhang, 17-1
    reference datum line, 17-2
    wheel base, 17-1
Vehicle securement, 20-12
    blocking and bracing, 20-12
    chain tie-down devices, 20-17
    chain tie-down procedures, 20-15
Vessel deadweight scale, 7-7
Vessels, 7-25
    break-bulk, 7-25
    conventional, 7-24
Warning labels, B-1 through B-4
Water clearance authority, 14-1
Water commodity and special handling code, 14-3
Weight and balance, 17-2 and 17-10
West coast rig, 3-26
Wheel blocks, 20-12
Wheel side blocks, 20-12
Winches, 3-8
    electric, 3-8, 11-9
    hydraulic, 3-9
    operation, 3-9 through 3-11
    signals, 3-11
Wing-and-wing rig, 3-27
Wire rope, 6-8
    classification, 6-8
    handling, 6-11
    inspection, 6-10
    measurement, 6-10
Wooden blocks, 6-1
Yard-and-stay rig, 3-24

Downloaded from http://www.everyspec.com

By Order of the Secretary of the Army:

DENNIS J. REIMER
General, United States Army
Chief of Staff

Official:

JOEL B. HUDSON
Administrative Assistant to the
Secretary of the Army
05652

DISTRIBUTION:

Active Army, Army National Guard, and U. S. Army Reserve: To be distributed in accordance with initial distribution number 111189, requirements for FM 55-17.

Downloaded from http://www.everyspec.com

PIN: 023741-000