Downloaded from http://www.everyspec.com

FM 23-41

DEPARTMENT OF THE ARMY FIELD MANUAL

SUBMACHINEGUNS
CALIBER .45 M3 AND M3A1

HEADQUARTERS, DEPARTMENT OF THE ARMY
28 JUNE 1974

Downloaded from http://www.everyspec.com

FIELD MANUAL
No. 23-41

HEADQUARTERS
DEPARTMENT OF THE ARMY
WASHINGTON, DC, *28 June 1974*

SUBMACHINEGUNS, CALIBER .45, M3 AND M3A1

		Paragraphs	Page
CHAPTER 1.	INTRODUCTION	1-5	3
2.	MECHANICAL TRAINING		
Section I.	Disassembly and assembly	6-15	8
II.	How the submachinegun functions	16-26	26
III.	Operation	27-32	30
IV.	Malfunctions, stoppages, and immediate action	33-36	33
V.	Care and cleaning	37-46	35
VI.	Repair parts and accessories	47-48	41
VII.	Ammunition	49-55	41
CHAPTER 3.	MANUAL OF ARMS	56-61	45
4.	MARKSMANSHIP TRAINING		
Section I.	General	62-64	48
II.	Preparatory marksmanship training and familiarization firing	65-72	48
III.	Range firing and targets, ranges, and range safety precautions	73-76	54
CHAPTER 5.	TECHNIQUE OF FIRE		
Section I.	Technique of fire	77-79	56
II.	Firing at moving ground targets	80-84	58
CHAPTER 6.	DESTRUCTION OF MATERIEL	85-89	60
7.	ADVICE TO INSTRUCTORS		
Section I.	General	90-94	62
II.	Range firing	95-96	63
III.	Training aids	97-99	63
CHAPTER 8.	SAFETY PRECAUTIONS	100-103	69
APPENDIX A.	REFERENCES	-------	72
B.	TRAINING SCHEDULE	-------	74
INDEX		-------	76

*This manual supersedes FM 23-41, 8 July 1957, including all changes; and Army Subject Schedule 21-34, 9 June 1959.

Downloaded from http://www.everyspec.com

WARNING

DANGEROUS PROCEDURES

Care must be exercised to either have the submachinegun raised or pointed down-range when loading. Load the weapon only when ready to fire. The submachinegun has no mechanical means of locking the trigger. The insertion of a loaded magazine loads the weapon. If the cover is open and the bolt cocked, pressure on the trigger will fire the gun. If an unlocked weapon is dropped, it may fire whether the bolt is cocked or not.

Unlock the loaded weapon only when it is raised for firing. When firing long bursts, the weapon has a tendency to move up and to the right. The firer can control this tendency by always taking a correct firing position.

DANGEROUS CONDITIONS

Before firing, the firer must be sure that the bore of the submachinegun is free from any obstruction in the bore that will result in damage to the weapon and possible injury to personnel.

Clear the weapon of all ammunition before starting the inspection. Remove the magazine and check the chamber to insure that it is empty. Do not actuate the trigger until the weapon has been cleared.

DANGEROUS SOLUTIONS

Avoid skin contact with P–C–111. The compound should be washed off thoroughly with running water if it comes in contact with the skin. A good lanolin base cream, after exposure to the compound, is helpful. The use of rubber gloves and protective equipment is recommended.

Downloaded from http://www.everyspec.com

CHAPTER 1

INTRODUCTION

1. General.

a. Purpose and Scope. The purpose of this manual is to provide a source of information to individual soldiers and guidelines to instructors on the Submachineguns, Caliber .45, M3 and M3A1. The material presented for the individual soldier includes mechanical training, marksmanship training, familiarization firing, and other information pertaining to the care and handling of the weapon. The advice to instructors chapter is not intended as a final guidance, but as a starting point for commanders to use in establishing a training program for the submachinegun.

b. Importance of Submachinegun Training. The submachinegun is a secondary individual weapon intended primarily for self-defense in close combat. It is primarily carried by members of tank crews, on combat engineer vehicles, and battalion/squadron maintenance personnel. It is used at close ranges or when a crew must dismount from a disabled vehicle. The soldier must keep his weapon in good working condition and have the utmost confidence in his marksmanship ability. This ability can be acquired only through study and practical training.

2. Changes.

Users of this publication are encouraged to submit recommended changes or.comments to improve the publication. Comments should be keyed to the specific page, paragraph, and line of the text in which the change is recommended. Reasons will be provided for each comment to insure understanding and complete evaluation. **Comments should be** prepared using DA Form 2028 (Recommended Changes to Publications and Blank Forms) and **forwarded direct to Command, US Army Armor School, ATTN: ATSB-TD-DD, Fort Knox, Kentucky 40121.**

3. General Description.

a. Submachinegun. The Submachineguns, Caliber .45, M3 and M3A1 (hereafter referred to as the M3 or M3A1), are air-cooled,

Downloaded from http://www.everyspec.com

blowback-operated, magazine-fed, automatic shoulder-fired weapons (fig 1 thru 4). They are light, compact, and rugged. The stock is one piece of formed steel rod which can be telescoped for ease of handling; its ends are drilled and tapped so that it can be used as a cleaning rod. The stock may also be used as a disassembly tool or wrench. The stock of the M3A1 has a hand loader that is used to load the magazine.

b. Magazine. The magazine (fig 1 thru 4) holds 30 cartridges. The upper cartridge is stripped from the magazine and chambered by the forward movement of the bolt. When the last cartridge from the magazine has been fired, the bolt closes on the empty chamber.

c. Rate of Fire. The automatic rate of fire is limited only by the firers ability to change magazines rapidly, aim and fire. There is no provision for semiautomatic fire; however, because of the low cyclic rate of fire, the firer can fire single shots by proper trigger manipulation.

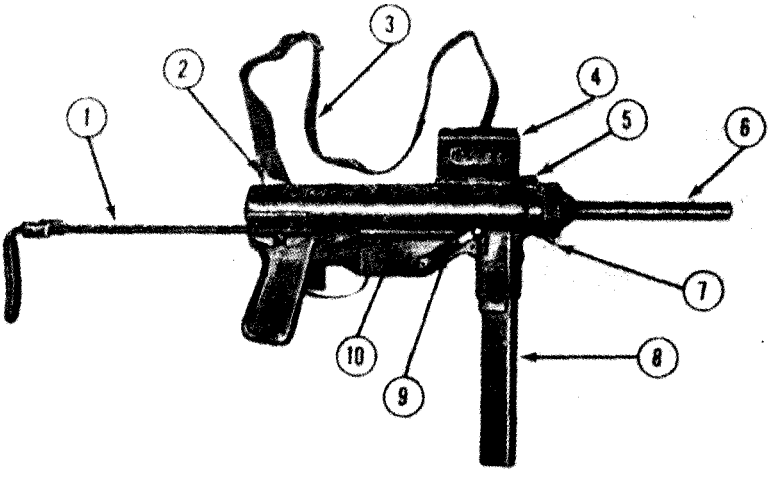

1. Stock
2. Rear sight
3. Sling
4. Cover
5. Front sight
6. Barrel
7. Barrel ratchet
8. Magazine
9. Retracting handle
10. Housing assembly

Figure 1. Submachinegun, M3, right side, stock extended.

Downloaded from http://www.everyspec.com

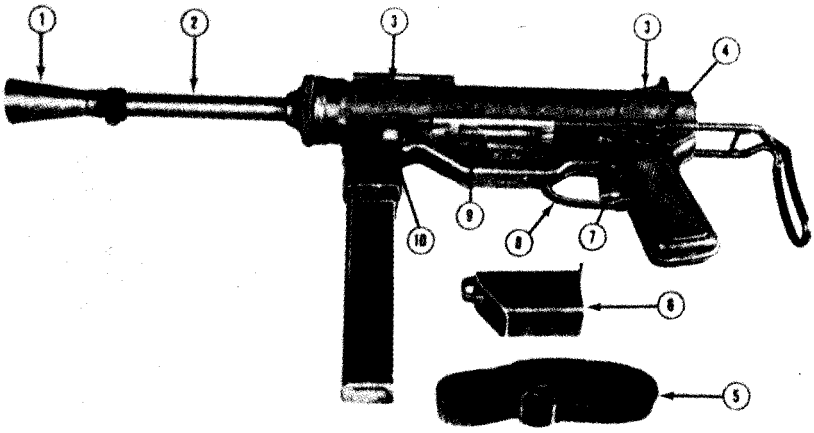

1. Flash hider (accessory)
2. Barrel
3. Sling loop
4. Stock catch
5. Sling
6. Magazine loader (accessory)
7. Trigger
8. Trigger guard
9. Oiler
10. Magazine catch

Figure 2. Submachinegun, M3, left side, stock telescoped, sling removed, with flash hider.

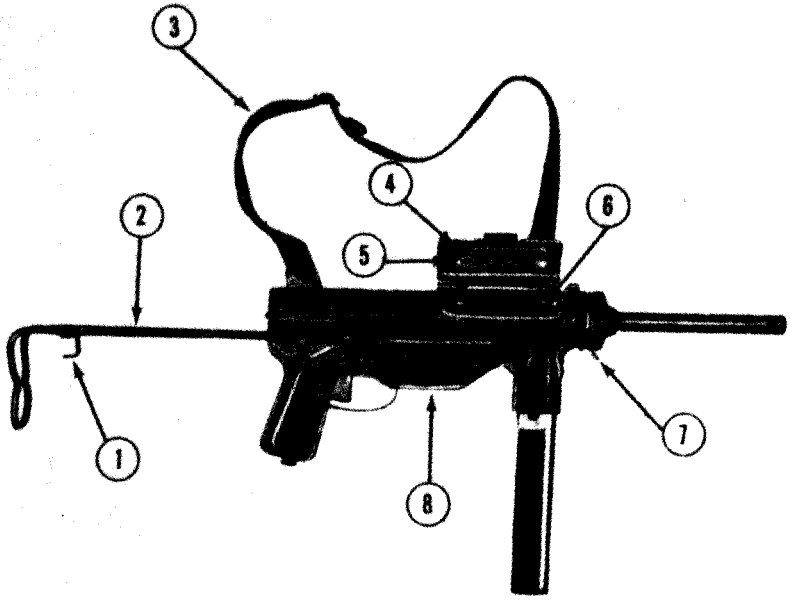

1. Hand loader and cleaning rod stop
2. Stock
3. Sling
4. Cover
5. Safety lock
6. Cocking slot
7. Barrel ratchet
8. Housing assembly

Figure 3. Submachinegun, M3A1, right side, stock extended.

Downloaded from http://www.everyspec.com

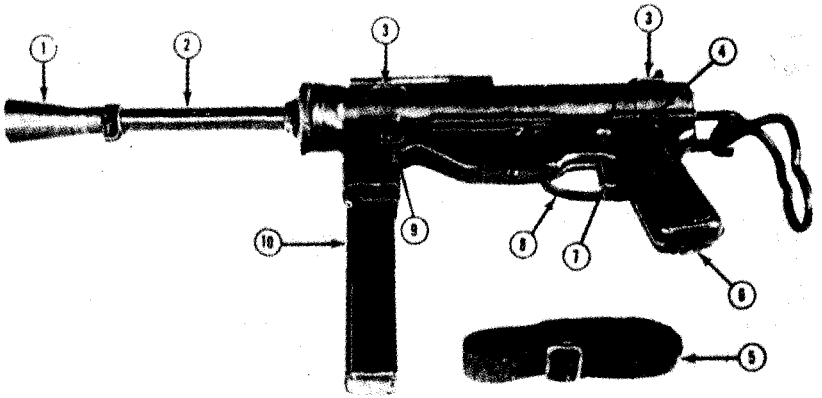

1. Flash hider (accessory)
2. Barrel
3. Sling loop
4. Stock catch
5. Sling
6. Oiler cap
7. Trigger
8. Trigger guard
9. Magazine catch
10. Magazine

Figure 4. Submachinegun, M3A1, left side, stock telescoped, sling removed, with flash hider.

4. General Data.

a Barrel.

Diameter of bore	0.45 inch
Number of grooves	4
Twist in firing	Uniform, right, 1 turn in 16 inches
Length of barrel	8 inches

b. Gun.

Length, overall with stock extended	29.8 inches
Distance between sights	10.875 inches
Weight without magazine (approx)	8.15 pounds
Weight with 30 rounds in magazine (approx)	10.25 pounds
Weight of 30-round magazine (empty)	.75 pound
Weight of 30-round magazine (loaded)	2.10 pounds

c. Miscellaneous.

Chamber pressure (approx)	12,000 to 16,000 pounds per square inch
Muzzle velocity (approx)	900 feet per second
Cyclic rate of fire	450 rounds per minute
Sights	100 yards, fixed peep
Maximum range (approx)	1,500 meters
Maximum effective range (approx)	90 meters
Trigger pull (approx)	5 to 7 pounds
Pull to cock weapon—M3	18 to 23 pounds
M3A1	10 to 12 pounds

Downloaded from http://www.everyspec.com

5. Differences in Models.

The M3 and the M3A1 are basically alike. However, though most of the parts are interchangeable, the bolt, the housing assembly, and the receiver are not. The M3A1, developed from the M3, was modified as follows:

a. The retracting handle assembly, retracting lever assembly, retracting lever spring, and oiler clip have been eliminated.

b. A cocking slot has been cut into the top front portion of the bolt, so that the firer can retract the bolt with his finger. There is an ejector groove on the bottom of the bolt, extending the entire length of the bolt, to permit removal of the bolt and guide rod group without removing the housing assembly. The retracting pawl notch has been eliminated, and a clearance slot for the cover hinge rivets has been added.

c. The ejection opening and the cover assembly are longer. This allows the bolt to be drawn back far enough to be engaged by the sear. The safety lock is located farther to the rear on the cover.

d. An oil reservoir and oiler have been placed in the pistol grip of the receiver assembly. The stylus on the oiler cap may be used as a drift to remove the extractor pin. The barrel ratchet has been redesigned to provide a longer depressing level for easier disengagement from the barrel collar.

e. A bracket has been welded at the rear end of the stock. This bracket is used as a hand loader for loading ammunition into the magazine; it also serves as a cleaning rod stop.

f. The barrel collar has two flat cuts to permit the use of the stock as a wrench to unscrew a tight barrel assembly.

Downloaded from http://www.everyspec.com

CHAPTER 2

MECHANICAL TRAINING

Section 1. DISASSEMBLY AND ASSEMBLY

6. General.

The purpose of this chapter is to enable the user to understand how to disassemble and assemble the submachinegun, how it functions, and how to care for it properly. In understanding functioning of the submachinegun, the soldier is better prepared to reduce malfunctions and stoppages as they occur. In learning the loading, firing, unloading, and safety checks, the individual acquires greater knowledge and thus develops confidence in the weapon. The first steps in understanding functioning are to learn the nomenclature and how to disassemble and assemble the weapon.

7. Nomenclature.

Nomenclature should be taught to the user to simplify and assist future instruction. In the disassembly/assembly procedures, the titles of the tasks involved are the names of the parts. The soldier should read and say the task to be performed aloud and thus learn the nomenclature.

8. Disassembly, General.

a. The soldier is permitted to disassemble only certain parts of the submachinegun—not because he cannot learn to disassemble all of them, but because unnecessary disassembly causes extra wear. Also, disassembly and assembly of some parts require tools that are not normally available in troop units.

b. The left column of the following chart shows those parts that may be disassembled by the soldier. The center column indicates those parts that the unit armorer may remove, including the parts disassembled by the soldier. The right column shows those parts that only ordnance personnel may disassemble.

Downloaded from http://www.everyspec.com

Disassembly authorized	Disassembly performed by		
	Individual soldier	Unit armorer	Ordnance personnel
Field disassembly	X	X	
Barrell assembly			X
Housing assembly			X
Trigger and sear group	X	X	
Bolt and guide rod group	X	X	
Extractor		X	
Magazine	X	X	
Receiver			X

9. Guides To Follow in Disassembly and Assembly.

These guides should be followed when disassembling and assembling the subrnachinegun.

a. Follow the step-by-step explanation in disassembling the submachinegun.

b. Do not attempt to disassemble or assemble the weapon against time.

c. If it is necessary to apply force, do it carefully so that none of the parts are damaged.

d. As the weapon is disassembled, line up the parts in the order of their removal. This procedure helps in assembly of the weapon, which is done in reverse order of disassembly.

10. Field Disassembly.

The soldier must learn field disassembly (removal of the groups) so well that he can perform this operation in the dark. The submachinegun can be field disassembled without special tools. Parts of the weapon are used instead of tools.

11. Procedure for Field Disassembly.

a. Before disassembling the submachinegun, make sure that the weapon is *clear* (para 31). Press in on the magazine catch, and remove the magazine. Raise the cover, pull the bolt to the rear, and inspect the chamber. Allow the bolt to go forward by squeezing the trigger. Close the cover.

Note. To pull back (retract) the bolt on the M3, pull the retracting handle to the rear. To pull back the bolt on the M3A1, insert a finger into the cocking slot on the bolt and pull the bolt to the rear.

b. To disassemble the submachinegun, follow the procedure illustrated in figures 5 through 15.

Downloaded from http://www.everyspec.com

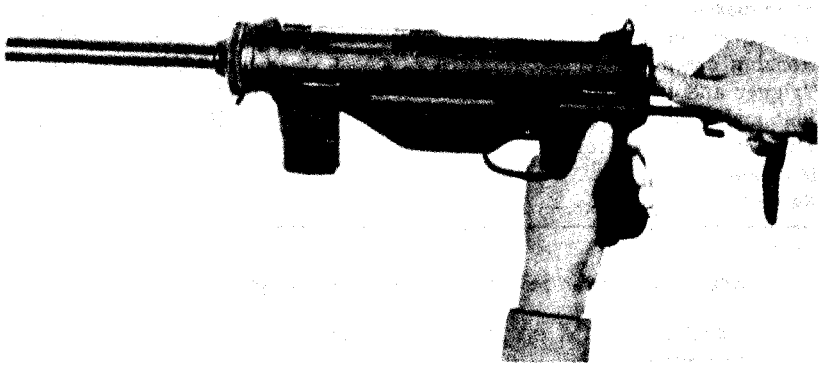

Figure 5. Press in on stock catch on the left side of the pistol grip, and remove the stock by pulling it directly to the rear.

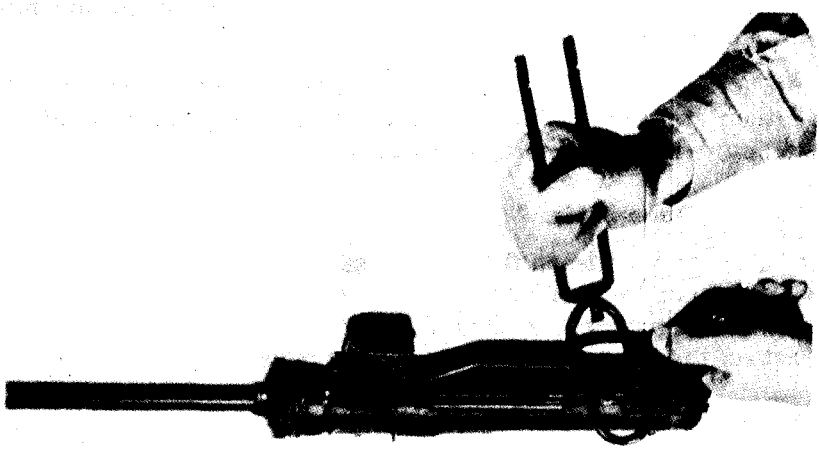

Figure 6. To remove the trigger guard, place one side of the shoulder rest of the stock on the housing assembly, against the trigger guard, and pry the trigger guard out of the pistol grip. Rotate the trigger guard toward the front of the weapon, and unhook the trigger guard from the housing assembly.

Downloaded from http://www.everyspec.com

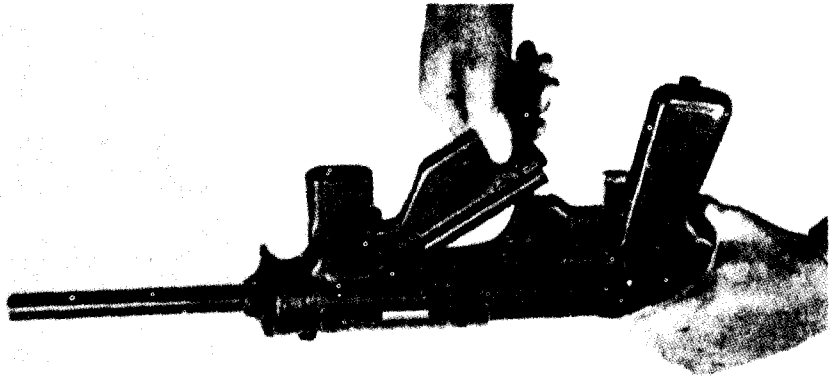

Figure 7. Remove the housing assembly by pulling up and to the rear on the rear end.

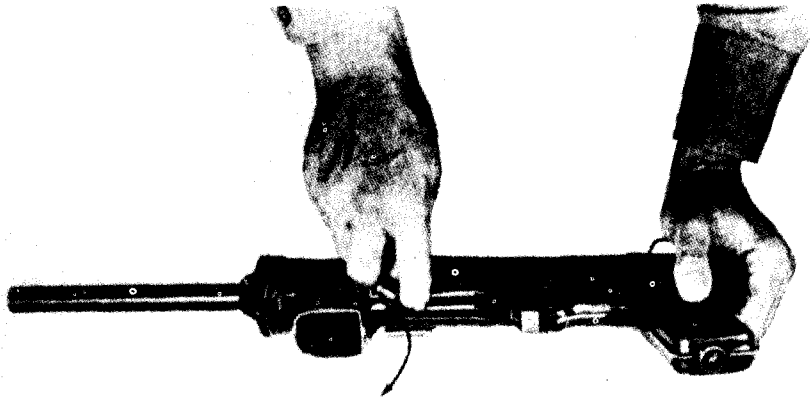

Figure 8. Remove the magazine catch assembly by rotating it twoard the right side of the receiver.

Downloaded from http://www.everyspec.com

Figure 9. To remove the barrel, make sure the bolt is forward, depress the barrel ratchet, and unscrew the barrel. Do not allow the barrel ratchet to contact the notches in the barrel collar when removing or replacing the barrel.

Downloaded from http://www.everyspec.com

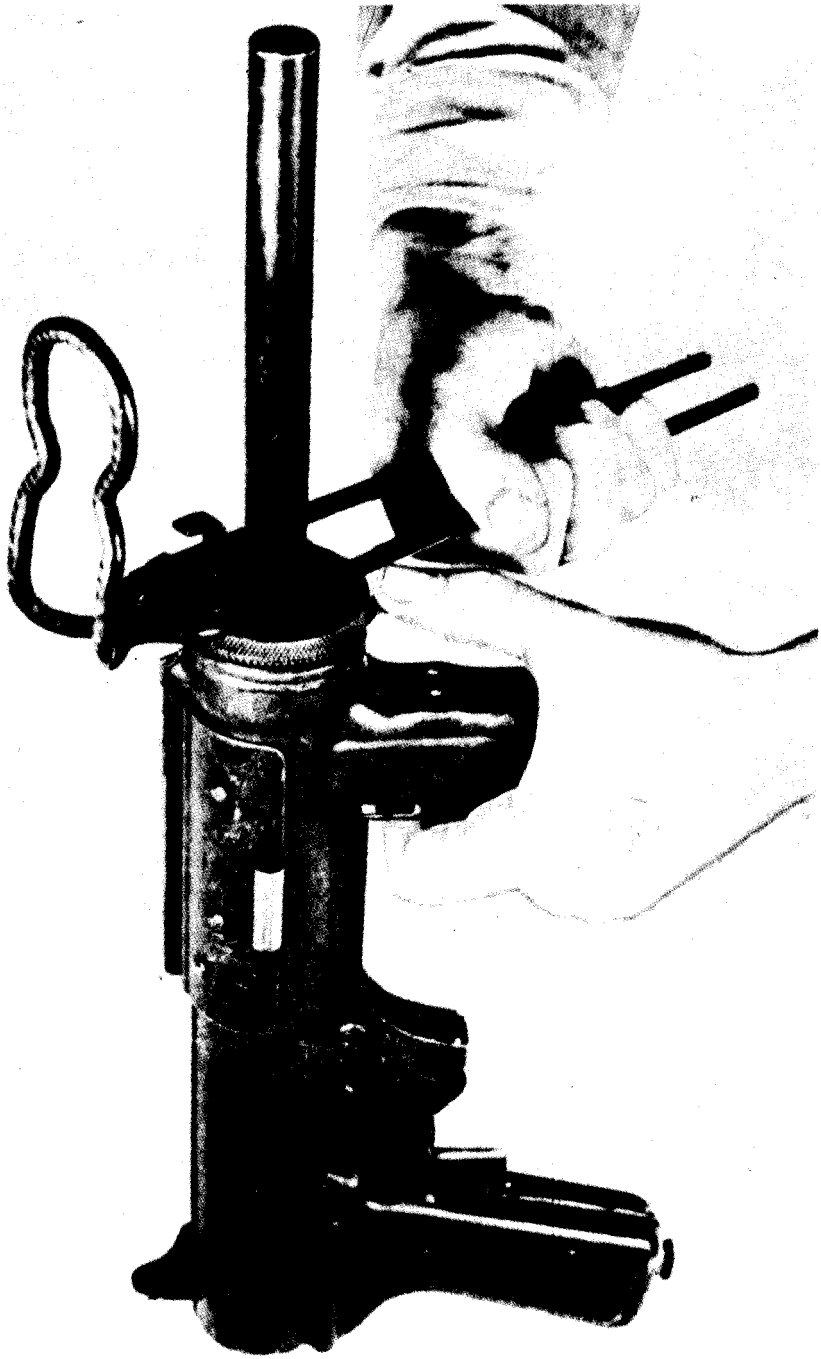

Figure 10. Using M3A1 stock as a wrench.

Downloaded from http://www.everyspec.com

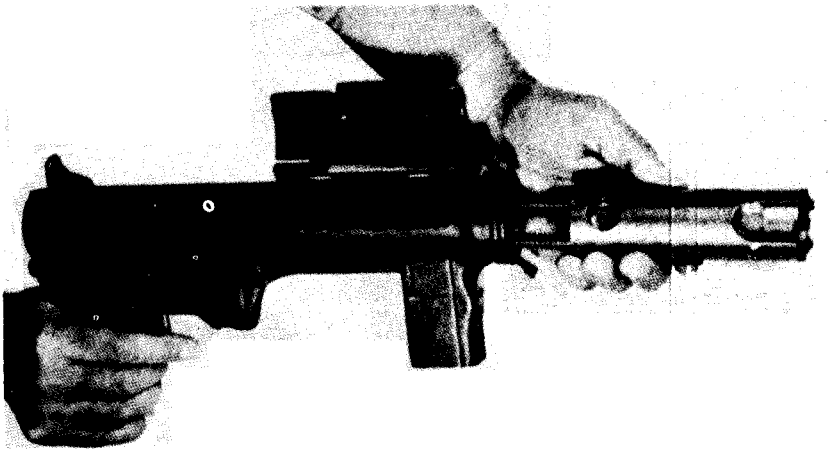

Figure 11. Open the cover, and withdraw the bolt and guide rod group from the receiver.

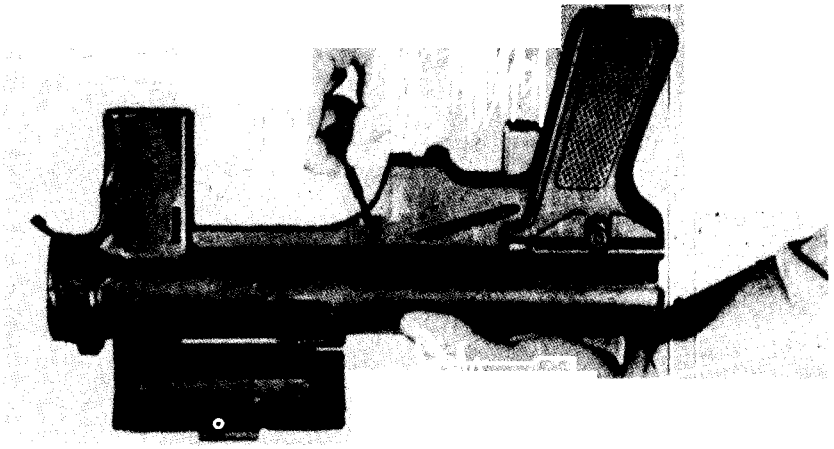

Figure 12. Drift out the sear pin. The magazine catch, ejector, or oiler stylus may be used as a drift.

Downloaded from http://www.everyspec.com

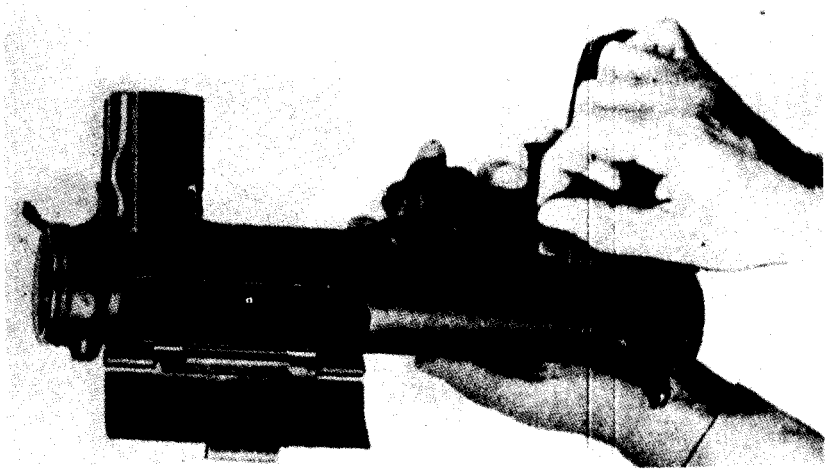

Figure 13. Remove the trigger pin.

Downloaded from http://www.everyspec.com

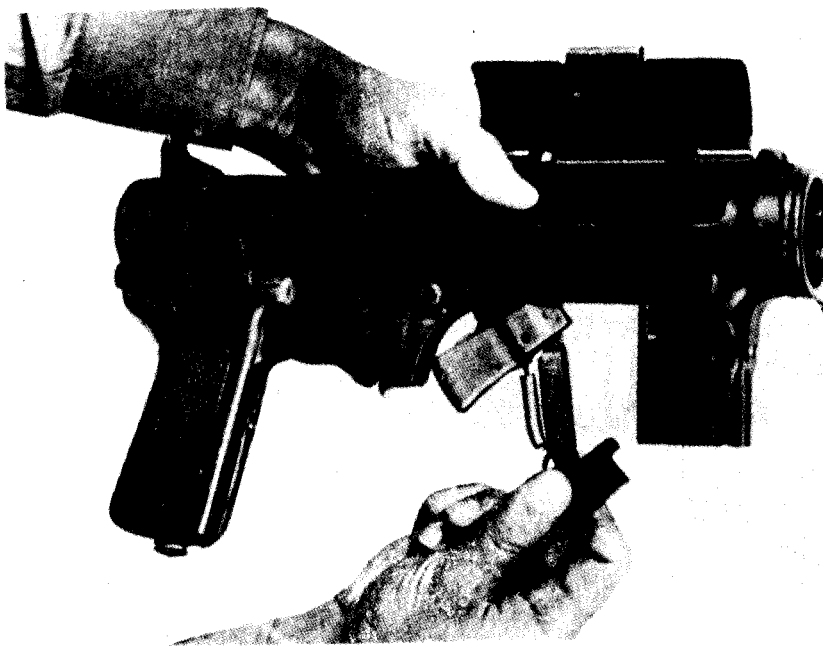

Figure 14. Withdraw the trigger and sear group from the receiver. Be careful not to drop the connector pin. This completes field disassembly.

Downloaded from http://www.everyspec.com

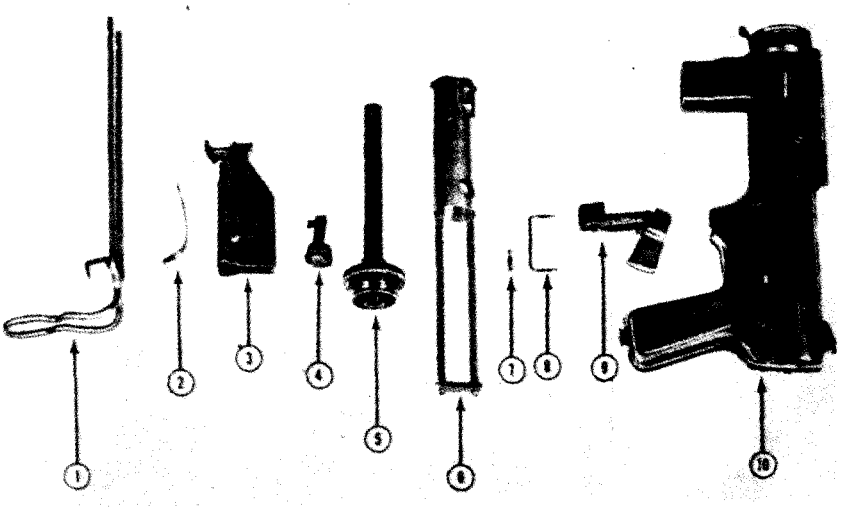

1. Stock
2. Trigger guard
*3. Housing assembly
4. Magazine catch assembly
*5. Barrel assembly
6. Bolt and guide group
7. Sear pin
8. Trigger pin
9. Trigger and sear group
*10. Receiver

*Further disassembly is performed by ordnance personnel only.

Figure 15. Parts lined up in order of removal during field disassembly.

12. Procedure for Assembly After Field Disassembly.

a. The first steps in assembling the submachinegun are illustrated in figures 16 and 17.

b. Replace the bolt and guide rod group into the receiver with the retaining plate to the rear and the sear notch down. Close the cover. Depress the barrel ratchet, and replace the barrel by screwing the barrel collar all the way down until it is snug against the receiver. Replace the magazine catch assembly. Place the front projection on the housing assembly into its recess in the magazine guide. Press the rear end of the housing into place; make certain that it is properly seated. Insert the forward end of the trigger guard in its slot in the housing assembly, and rotate it to the rear (fig 18). Do not use force in this operation. Press the rear end of the trigger guard until it snaps into its slot in the pistol grip. Press in on the stock catch, and replace the stock.

160-855 0 - 94 - 2

Downloaded from http://www.everyspec.com

Figure 16. Replace the trigger and sear group in the receiver, with the trigger pin holes in the trigger and receiver alined. Replace the trigger pin. The front arm of the trigger pin goes through the holes in the receiver and does not go through any other parts.

Downloaded from http://www.everyspec.com

Figure 17. Grasp the receiver, with the little finger on the trigger and the first finger against the sear. Press down on the trigger, and at the same time manipulate the sear until the sear pin hole in the sear is alined with the hole in the receiver. Replace the sear pin.

Downloaded from http://www.everyspec.com

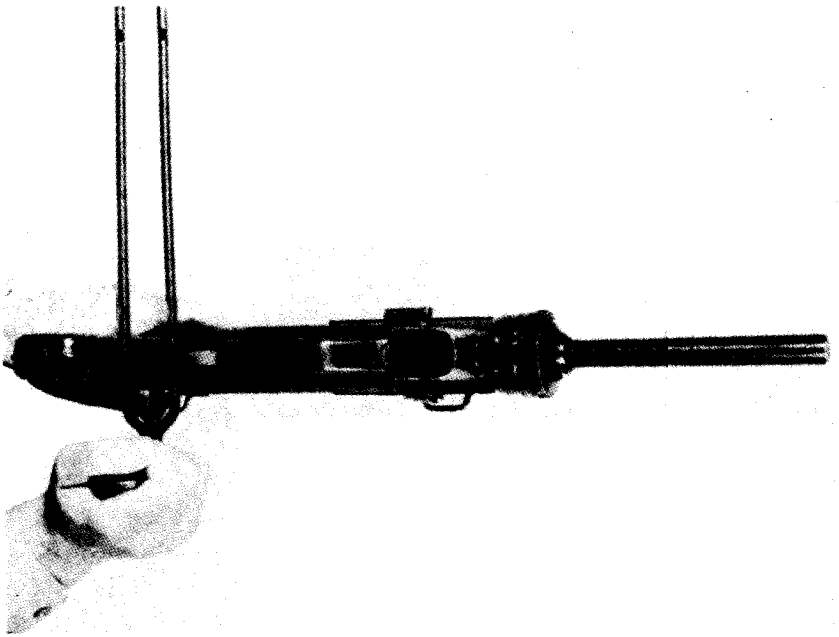

Figure 18. Use of the stock in replacing the trigger guard.

13. Disassembly of Groups (Detailed Disassembly).

a. Magazine (fig 19). Lift the tab in the base plate by inserting a screwdriver in the hole. Remove the base plate, placing the fingers over the bottom of the magazine to prevent the magazine spring from flying out. Remove the magazine spring and the magazine follower.

b. Bolt and Guide Rod Group (fig 20 thru 24). Compress the driving springs, and remove the guide rod retaining clip. Remove the guide rod locating plate. Remove the bolt and driving springs from the guide rods. Do not remove the guide rod retaining plate from the two guide rods (this is done by ordnance personnel only). The extractor is removed for replacement only (this should be done by the unit armorer). To remove the extractor, drift out the extractor pin (from the small end, located on the bottom of the bolt). Place the rim of a dummy cartridge under the lip of the extractor, and lift it out.

c. Trigger and Sear Group (fig 25). Drift out the connector pin. Remove the sear. Unfasten the trigger spring from the connector (do not remove it from the trigger).

Downloaded from http://www.everyspec.com

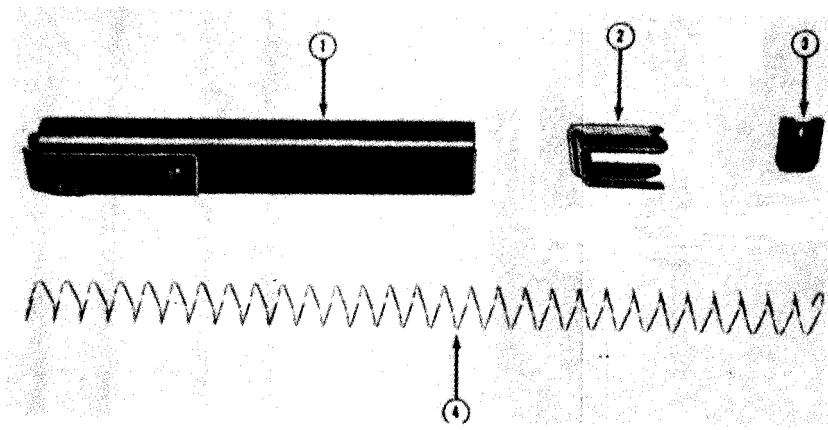

1. Magazine body
2. Magazine follower
3. Magazine base
4. Magazine spring

Figure 19. Magazine assembly.

Downloaded from http://www.everyspec.com

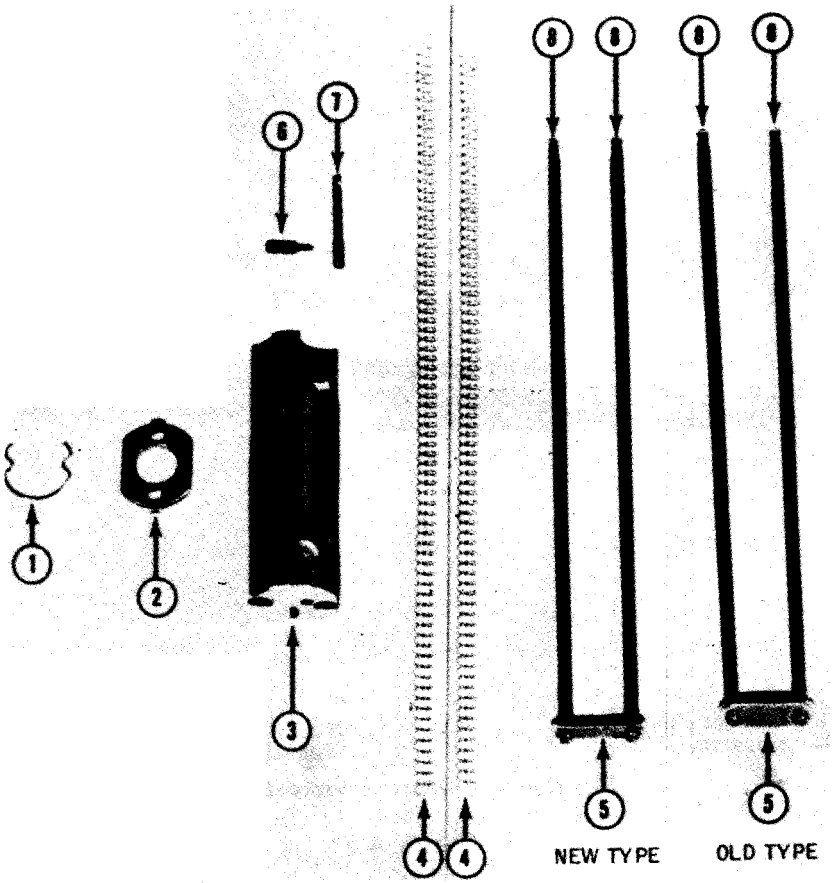

1. Guide rod retaining clip
2. Guide rod locating plate
3. Bolt
4. Driving springs
5. Guide rod retaining plate
6. Extractor pin
7. Extractor
8. Guide rods

Figure 20. Bolt and guide rod group.

Downloaded from http://www.everyspec.com

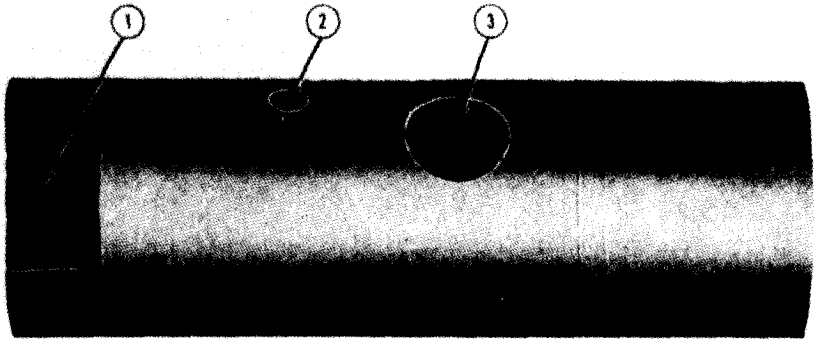

1. Clearance cut to allow ejection of spent cartridge case
2. Extractor pin
3. Safety lock recess

Figure 21. Top view of M3 Bolt.

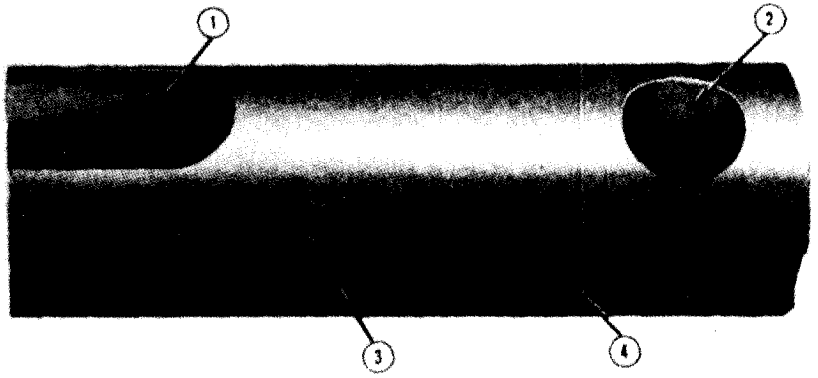

1. Cocking slot
2. Safety lock recess
3. Extractor pin
4. Clearance groove for cover rivets

Figure 22. Top view of M3A1 bolt.

Downloaded from http://www.everyspec.com

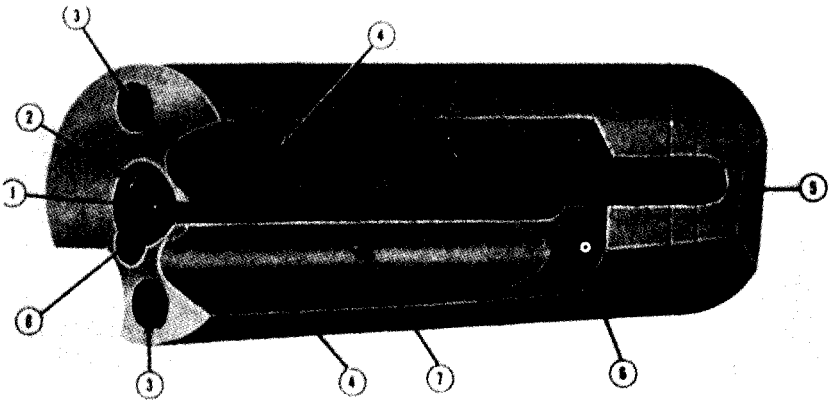

1. Firing pin
2. Cartridge recess
3. Guide rod bearing
4. Magazine lip recess
5. Retracting lever pawl notch
6. Sear notch
7. Extractor pin
8. Extractor

Figure 23. Bottom view of M3 bolt.

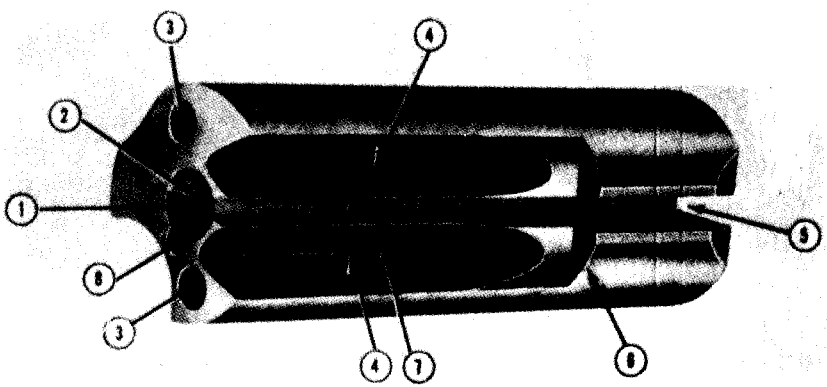

1. Firing pin
2. Cartridge recess
3. Guide rod bearings
4. Magazine lip recess
5. Ejector groove
6. Sear notch
7. Extractor pin
8. Extractor

Figure 24. Bottom view of M3A1 bolt.

Downloaded from http://www.everyspec.com

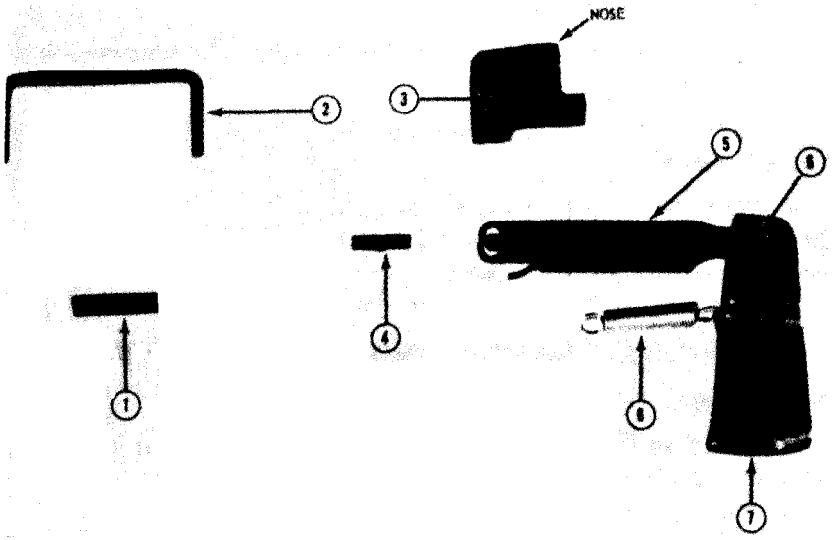

1. Sear pin
2. Trigger pin
3. Sear
4. Connector pin
5. Connector
6. Connector rivet
7. Trigger
8. Trigger spring

Figure 25. Trigger and sear group.

14. Assembly of the Groups.

a. Magazine. Replace the magazine follower and the magazine spring, with the loop toward the front of the magazine. Compress the magazine spring into the magazine body, and replace the magazine base. Press the tab back into its original position.

b. Bolt and Guide Rod Group. Replace the extractor so that the notch and hole for the extractor pin in the bolt are alined. Firmly seat the extractor pin, and stake it in place. Place the driving springs on the guide rods. Compress the driving springs, and place the bolt on the guide rods with the firing pin away from the guide rods retaining plate. Replace the guide rod locating plate and the guide rod retaining clip.

c. Trigger and Sear Group. Fasten the trigger spring to the connector. Place the sear on the connector, with the sear nose up and to the rear. Replace the connector pin.

15. Operation Check.

After the weapon has been assembled, it should be checked to insure that it has been correctly assembled.

Downloaded from http://www.everyspec.com

a. Pull the bolt to the rear sharply. It should be engaged and held to the rear by the sear.

b. Close the cover, and squeeze the trigger. The bolt should not move forward.

c. Open the cover, and squeeze the trigger. The bolt should move forward.

d. With the trigger held to the rear, pull the bolt to the rear and release it. The bolt should not be held to the rear by the sear, but should move forward.

Section II. HOW THE SUBMACHINEGUN FUNCTIONS

16. General.

a. By disassembling and assembling the submachinegun, the soldier becomes familiar with the parts. The next step is to learn how these parts function. If the soldier understands how the submachinegun works, he will be able to keep it in operating condition and reduce any stoppage which might occur during firing. This knowledge will give the soldier confidence in his weapon.

b. Each time a cartridge is fired, the parts inside the submachinegun function in a given order. This is known as the cycle of operation (functioning).

c. The cycle of operation of small arms is broken down into eight basic steps. However, in the subrnachinegun, two of these steps—locking and unlocking—do not occur. The 6 basic steps of the cycle of operation of the submachinegun are listed below in the proper sequence, although more than 1 step may occur at the same time.

(1) Feeding—the placing of a cartridge in the receiver, in front of the bolt, so it can be chambered. This action takes place in the magazine only.

(2) Chambering—moving the cartridge forward until it is properly seated in the chamber.

(3) Firing—the striking of the primer of the cartridge by the firing pin to ignite the cartridge.

(4) Extracting-removal of the empty cartridge case from the chamber.

(5) Ejecting—removal of the empty cartridge case from the receiver.

(6) Cocking—retraction of the bolt far enough so that it

Downloaded from http://www.everyspec.com

will pick up a new cartridge and, as it moves forward, will have enough energy to fire the new cartridge.

17. Functioning of the Submachinegun, General.

As the bolt is moved back to a cocked position, the driving springs are compressed, and the ear engages the sear notch of the bolt. When the trigger is pressed, the sear releases the bolt, which is driven forward by the driving springs. During this forward movement, the bolt pushes a cartridge from the magazine into the chamber. The bolt continues forward and fires the cartridge. When the cartridge is fired, the chamber pressure forces the bullet out of the muzzle of the barrel. At the same time, this pressure overcomes the forward movement of the bolt and starts it to the rear. By the time the bolt and empty cartridge case have moved to the rear far enough to open the rear end of the chamber, the bullet has left the barrel, and the chamber pressure has decreased. (In the submachinegun, the chamber pressure is relatively low and the bolt is relatively heavy; this eliminates the need for the steps of locking and unlocking.) During the rearward movement of the bolt, the empty cartridge case is extracted and ejected, the driving springs are compressed, and the top round in the magazine moves up against the lips of the magazine (fig 26). The rearward movement of the bolt is stopped by the compressed driving springs or when it contacts the guide rod retaining plate.

Figure 26. M3, cutaway view. Lower left shows camming action of ejector on empty cartridge case. Lower right shows action of retracting lever and handle in cocking the gun.

Downloaded from http://www.everyspec.com

18. Operation of the Trigger and Sear Group.

a. When the trigger is pressed, it rotates around the rear arm of the trigger pin and forces the connector forward. This rotates the sear from the sear notch in the bottom of the bolt. This allows the bolt to move forward under the action of the expanding driving springs.

b. If the trigger is held to the rear, the nose of the sear cannot engage the sear notch. The bolt will continue to move forward and backward, firing the weapon automatically until the trigger is released.

c. If the trigger is released, the nose of the sear engages in the sear notch in the bottom of the bolt, and holds the bolt in its rearward or cocked position. The trigger spring furnishes the spring action to the sear. The front arm of the trigger pin is a stop for the sear and prevents it from rotating forward when it engages the bolt.

19. Feeding.

a. When a loaded magazine is placed in the weapon, the magazine catch holds the magazine in position. The top cartridge is held against the lips of the magazine through the action of the magazine spring and follower. When the bolt moves forward, it removes the round from the magazine.

b. When the bolt moves to the rear and clears the top of the magazine, the next cartridge is placed against the lips of the magazine by the action of the magazine spring and follower.

20. Cambering.

The bolt, moving forward under the action of the expanding driving springs, pushes the top cartridge out of the magazine. The lips of the magazine aid to aline the cartridge with the chamber. As the bolt continues forward, the cartridge is pushed into the chamber by the front of the bolt and the extractor. The base of the cartridge protrudes slightly from the chamber when the cartridge is fully seated.

21. Firing.

After the cartridge is chambered, the bolt continues to move forward. The extractor springs out to the side and snaps into the extracting groove of the cartridge. At the same time, the fixed firing pin in the center of the cartridge recess of the bolt strikes the primer of the cartridge, firing the cartridge. At the instant of firing, the cartridge is inclosed in the chamber by the cartridge

Downloaded from http://www.everyspec.com

recess of the bolt, and the rim of the cartridge is engaged by the extractor.

22. Extracting.

a. When the cartridge is fired, the gas pressure forces the bullet out of the muzzle and the empty cartridge case out of the chamber, pushing the bolt to the rear. The extractor holds the base of the cartridge case against the bolt. The bolt continues moving to the rear, carrying the empty cartridge case with it. Extraction is completed when the front of the cartridge case clears the rear of the chamber.

b. If the cartridge is not fired, the extractor will remove it from the chamber when the bolt is manually pulled to the rear.

23. Ejecting.

As the bolt moves to the rear, the empty cartridge case is held by the extractor. The base of the cartridge strikes the fixed ejector. The extractor serves as a pivot point for the cartridge, which is deflected out of the ejection opening of the receiver. The extractor and ejector are both needed to complete the ejection.

24. Cocking.

As the bolt moves to the rear, the driving springs are compressed. If the trigger has been released, the nose of the sear will move up. As the bolt moves forward, the sear nose will engage in the sear notch and hold the bolt to the rear in a cocked position. If the trigger has not been released, the bolt will continue forward and the cycle of operation will be repeated.

Caution. **If the gun is accidentally dropped, the bolt may be jarred far enough to the rear to clear the top cartridge in the magazine, but not far enough for the sear nose to engage in the sear notch. When this happens, the bolt will chamber and fire the cartridge as it goes forward.**

25. Operation of the Housing Assembiy.

a. On the M3, when the retracting handle is pulled to the rear, the retracting lever pawl rises into the pawl notch in the bottom of the bolt. As the retracting handle is moved farther to the rear, the retracting lever pawl pushes the bolt to the rear until the bolt is engaged by the sear and held in a cocked position.

b. On the M3A1, the firer retracts the bolt with his finger. The retracting mechanism has been eliminated.

Downloaded from http://www.everyspec.com

26. Operation of Safety Lock.

a. When the bolt is forward and the cover is closed, the safety lock on the cover engages in the safety lock recess in the bolt. This prevents movement of the bolt.

b. When the bolt is to the rear and the cover is closed, the safety lock enters the cocking slot of the M3A1 bolt, or the notch on the front top portion of the M3 bolt, forces the bolt back off the sear, and holds it to the rear. Closing the cover is called "locking the piece."

Section III. OPERATION

27. General.

Before firing the submachinegun, the firer must know how to fill the magazine; must know how to load, fire, and unload the weapon; and must observe safety precautions. These points are covered in this section.

28. To Fill Magazine.

a. Place the magazine loader on top of the magazine, then place the base of the magazine on a firm surface. Push down on the loader to depress the magazine follower. Insert a cartridge, base first, into the magazine. Lift the loader, and push the cartridge all the way into the magazine. Push down on the loader, depressing the cartridge and magazine follower. Repeat the operation (fig 27) until the magazine is full.

b. To use the stock as the hand loader (fig 28), place the butt of the stock over the magazine and use the same procedure as with the magazine loader.

29. To Load Submachinegun.

To load the submachinegun, pull the bolt sharply to the rear (cock), close the cover (lock), insert the magazine, and push it upward until the magazine catch clicks into the magazine notch (load).

30. To Fire Submachinegun.

a. To fire the gun, raise the cover and manipulate the trigger.

b. The gun has no mechanism for semiautomatic fire. However, it is possible to fire single shots by proper manipulation of the trigger, pressing it and then quickly releasing it. It takes practice for a firer to become proficient at firing single shots.

Downloaded from http://www.everyspec.com

Figure 27. Using magazine loader.

c. When firing long bursts, the weapon has a tendency to move to the right. The firer can control this tendency by always taking a correct firing position (para 69).

d. When the magazine has been emptied, the bolt will close on the empty chamber. Cock and lock the weapon before inserting another loaded magazine.

Downloaded from http://www.everyspec.com

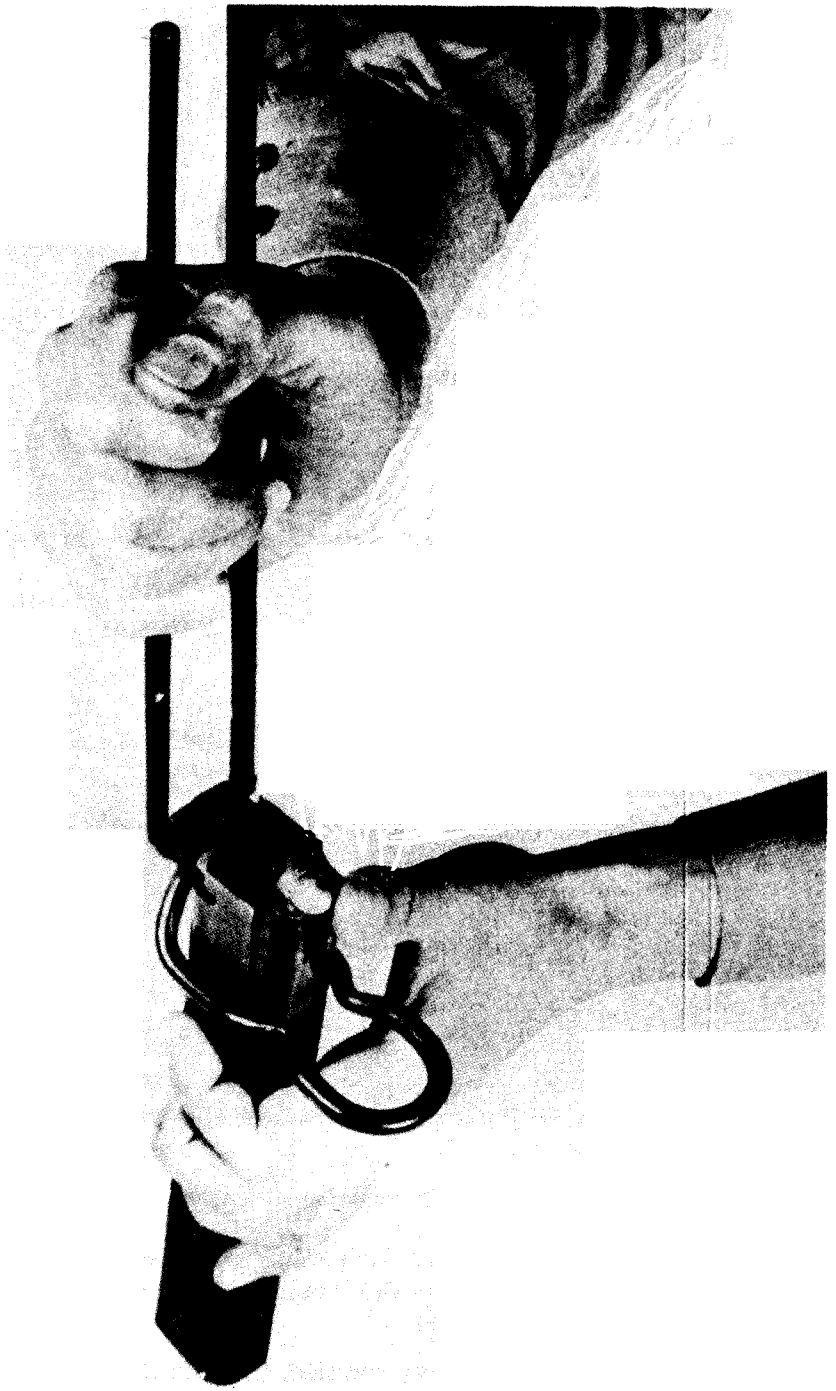

Figure 28. Use of the stock as a hand loader.

Downloaded from http://www.everyspec.com

31. To Unload Submachinegun (Clearing).

Remove the magazine, and raise the cover. If the bolt is forward, pull it to the rear. Inspect the chamber (look and feel). Press the trigger and allow the bolt to go forward, then close the cover.

32. Safety Precautions, General.

Safety cannot be overemphasized. The submachinegun has no mechanical means of locking the trigger. The insertion of a loaded magazine loads the gun. If the cover is open and the bolt cocked, pressure on the trigger will fire the gun. If an unlocked gun is dropped, it may fire whether the bolt is cocked or not. The safety precautions to observe in handling the submachinegun are:

a. Never consider the weapon to be safe unless it has been properly cleared.

b. Never playfully or carelessly point the weapon at anyone.

c. Load the weapon only when ready to fire.

d. Unlock the loaded weapon only when it is raised for firing.

e. Never leave any obstruction in the muzzle or bore.

Section IV. MALFUNCTIONS, STOPPAGES, AND IMMEDIATE ACTION

33. General.

A malfunction is a failure of the weapon to function satisfactorily. A stoppage is any unintentional interruption in the cycle of operation. If the submachinegun stops firing through no fault or intention of the firer, or an attempt to fire is made and the weapon does not fire, then a stoppage has occurred. The firer must be able to reduce a stoppage and continue firing. In combat, lives and the success of a mission may depend on the soldier's ability to reduce a stoppage quickly and continue to deliver accurate fire. Immediate action is the prompt action taken by the firer to reduce a stoppage.

34. Malfunctions.

a. Failure To Function Freely. Sluggish operation of the gun is usually due to excessive friction caused by dirt, lack of proper lubrication, burred or bent guide rods, or a dent in the receiver.

b. Uncontrolled Automatic Fire (Runaway Gun). Uncontrolled automatic fire is fire that continues after the trigger has been released. This may be caused by the following:

160-855 0 - 94 - 3

Downloaded from http://www.everyspec.com

(1) A worn sear nose.

(2) A worn sear notch on the bolt.

(3) A weak or broken trigger spring.

In case of uncontrolled automatic fire, keep the gun pointed at the target and press the magazine catch to release the magazine.

35. Stoppages.

a. Stoppages are classified in accordance with the six steps in the cycle of operation of the submachinegun (para 16 *c*). Stoppages are usually the result of worn parts or improper care of the gun. A knowledge of how the gun functions enables the soldier to classify and correct the stoppage. Listed below are the classes of stoppages which might occur.

(1) *Failure to feed.* The top cartridge in the magazine is not positioned up and in front of the bolt. Most stoppages of the submachinegun are failures to feed caused by a defective or dirty magazine.

(2) *Failure to chamber.* The top cartridge from the magazine is not seated in the chamber.

(3) *Failure to fire.* The cartridge is chambered but does not fire.

(4) *Failure to extract.* If the cartridge fires, the chamber pressure will usually push the empty cartridge case out of the chamber. If the cartridge case is not completely removed from the chamber and the bolt is retracted, then there is a failure to extract. This stoppage seldom occurs.

(5) *Failure to eject.* The empty cartridge case is not ejected from the receiver.

(6) *Failure to cock.* If the bolt is retracted and is not held by the sear, or if, during firing, the bolt does not move to the rear far enough to clear the top cartridge in the magazine, the gun has a failure to cock.

b. Common Stoppages. The two most common stoppages are:

(1) Failure to feed—usually caused by a defective magazine,

(2) Failure to fire-usually caused by defective ammunition.

c. Causes of Stoppages. The following chart lists common causes of various stoppages.

Downloaded from http://www.everyspec.com

Stoppage	Cause	How to reduce
Failure to feed	Dirty or dented magazine	Replace magazine.
	Weak or broken magazine spring.	Replace magazine.
	Worn magazine notch	Replace magazine.
	Corroded ammunition	Replace ammunition.
	Worn or broken magazine catch.	Replace magazine catch.
Failure to chamber	Dirty chamber	Clean chamber.
	Obstruction in chamber	Remove obstruction.
	Weak driving springs	Replace driving spring.
Failure to fire	Defective ammunition	Replace ammunition.
	Defective firing pin	Replace bolt.*
	Weak driving springs	Replace driving springs.
Failure to extract	Broken extractor	Replace extractor.
Failure to eject	Broken ejector	Replace ejector.*
	Broken or missing extractor	Replace extractor.
Failure to cock	Worn sear	Replace sear.*
	Worn sear notch	Replace bolt.*
	Bent guide rods	Straighten.

*These items are not carried as a unit repair parts.

d. Prevention of Stoppages. Periodic inspection and proper care and cleaning will reduce the possibility of the submachinegun having a stoppage.

36. Immediate Action.

a. As the first step in reducing a stoppage, remove the magazine, retract the bolt, and inspect the chamber to insure that it does not contain a live cartridge, or any other obstruction. If there is no obstruction, close the cover, replace the magazine, open the cover, and attempt to fire. If the gun still does not fire, check to see whether a live cartridge has chambered; if it has not, remove the magazine and insert a new magazine.

b. If there is a live cartridge or other obstruction lodged in the chamber, cock the gun and hold the cover down firmly; remove the barrel; then clear the chamber by using the stock to push the obstruction out of the barrel. Under combat conditions, when time is short, omit the step of removing the barrel.

Section V. CARE AND CLEANING

37. General.

The submachinegun will function under conditions that would cause some automatic weapons to fail. However, its continued

Downloaded from http://www.everyspec.com

dependability and accuracy depend on its receiving proper care and cleaning. The chamber and bore, receiver, and moving parts must be kept clean and *very lightly* oiled. The same care must be given the magazines.

38. Cleaning, Materials, Lubricants, and Rust Preventives.

a. Cleaning Materials.

(1) Cleaning compound, solvent (rifle bore cleaner), is used to clean the bore and the face of the bolt after firing. It dissolves corrosive primer salts and removes primer fouling, powder ash, and carbon. This cleaner has preservative properties and provides temporary protection against rust.

Caution. **Rifle bore cleaner is usable at temperatures of minus 20° Fahrenheit and higher. When it is below that temperature, it must be thawed and shaken well before it is used. *Do not mix water with rifle bore cleaner.* This destroys its preservative qualities and impairs its value as a cleaner.**

(2) Hot or cold water may be used to clean the bore when rifle-bore cleaner is not available. Hot, soapy water is preferable. One-quarter pound of soap dissolved in 1 gallon of water makes a desirable solution. After using the solution, dry the barrel thoroughly and apply a thin coat of oil.

(3) Volatile mineral spirits paint thinner and drycleaning solvent are noncorrosive solvents used for removing grease, oil, or light rust-preventive compounds from weapons. Apply them with rags to large parts, and use them as a bath for small parts.

Caution. **These solvents are highly flammable. Do not smoke when using them. Continuous contact with them will dry the skin and may cause irritation.**

(4) Decontaminating agents are used under special conditions to remove chemical agents (para 45).

b. Lubricants.

(1) Medium preservative lubricating oil is a highly refined, nonhardening mineral oil containing a rust-inhibiting additive. It forms a relatively heavy film that resists direct action of salt spray. This makes it useful for coating all parts of a weapon before amphibious operations. It should be used in preference to special preservative lubricating oil only when the weapon is exposed to salt water, high humidity, or high temperatures. This oil should not be used in temperatures below freezing.

(2) Special preservative lubricating oil is a thin oil used for lubricating at normal and below-normal temperatures, and for

Downloaded from http://www.everyspec.com

providing temporary protection against rust. When this oil is used, moving parts of weapons must be checked frequently to make sure that they have an adequate film of lubricant.

(3) Engine oil SAE 10 may be used when preservative lubricating oils cannot be obtained. In cold weather, any heavy oil will cause sluggish operation, and may prevent the submachinegun from functioning properly. Engine oil does not have the rust-preventive properties of preservative lubricating oils. When engine oil is used, the weapon must be inspected, cleaned, and reoiled frequently.

c. Rust Preventive. Medium rust-preventive compound can be used to protect the submachinegun for a long period of time when it is boxed for storage.

39. Care and Cleaning Before Firing.

Before the submachinegun is fired, the following stops should be taken to make sure that it will function properly:

a. Field disassemble the weapon.

b. Clean the bore and chamber with a clean, dry patch.
Note. Do not apply oil to bore or chamber before firing.

c. Clean all parts thoroughly.

d. Use a lightly oiled cloth, apply a light coat of lubricating preservative oil to all parts that do not come in contact with the ammunition.

e. Assemble the weapon.

f. Wipe excess oil from the receiver.

g. Clean the magazines, and place a light film of oil on their outer surfaces.

40. Care and Cleaning During Firing.

a. During lulls in firing, lubricate the guide rods, oil the sear pin, and trigger pin. Use the stylus of the oiler to apply oil from the oiler.

b. If time permits, during a lull in firing, disassemble the submachinegun and oil the sear, sear notch, connector pin, connector rivet, and the grooves in the bottom of the bolt.

41. Care and Cleaning After Firing.

The weapon must be cleaned as soon as practicable on the day of firing in the following manner:

Downloaded from http://www.everyspec.com

a. Disassemble the groups.

b. Clean all parts with dry, clean cloth, using rifle bore cleaner if necessary. Inspect all parts, and apply a light film of oil.

c. Clean the bore and chamber, using the following procedure:

(1) Saturate a patch with rifle bore cleaner, and run it back and forth through the bore.

(2) Repeat the operation 2 or 3 times with clean patches saturated with bore cleaner.

(3) Run dry patches through the bore until they come out dry and clean.

(4) Inspect the bore for cleanliness. If it is not free of oil residue, repeat the cleaning process. If the residue cannot be removed by the use of patches, the bore brush should be used.

(5) Clean the chamber with rifle bore cleaner applied to a patch on the chamber cleaning brush.

(6) Dry the chamber, and inspect it for cleanliness.

(7) After the bore and chamber are cleaned dry them and apply a light coat of oil.

d. Assemble the weapon.

e. Perform an operation check (para 15).

f. Inspect periodically.

42. Care and Cleaning During Combat.

a. There is no basic difference in the care and cleaning of the submachinegun during range firing and during combat. However, when the weapon is being fired each day, rifle bore cleaner may be left in the bore and chamber each night.

b. To obtain the maximum efficiency from the submachinegun:

(1) Before firing, carefully check the bore and chamber for obstructions.

(2) Keep the bore and chamber free from oil and dirt when firing.

(3) Never leave a patch, plug, or other obstruction in the chamber or bore. Neglect of this precaution may result in serious injury.

(4) Oil the guide rods frequently to insure smooth operation of the gun,

(5) In emergencies, when the prescribed lubricants are not available, use any clean light mineral oil such as engine oil.

Downloaded from http://www.everyspec.com

43. Preparation for Storage.

Medium preservative lubricating oil is the most suitable oil for short-term protection. It is effective for storage over periods of 2 to 6 weeks, depending on climatic conditions. However, submachineguns in short-terms storage must be inspected every 4 or 5 days and reoiled if necessary. For longer periods of storage, submachineguns are protected with medium rust-preventive compound. This compound is a semisolid material. It will preserve the weapon for a period of approximately 1 year, depending on climatic and storage conditions.

a. The weapon must be cleaned and prepared for storage with great care. The bore, receiver, and other parts of the gun should be thoroughly cleaned and completely dried with rags. In damp climates, particular care must be taken to see that the rags are dry. After a metal part is dried, it should not be touched with bare hands. All metal parts should then be coated with either medium preservative lubricating oil or medium rust-preventive compound, depending on the length of storage required. The best way to apply rust-preventive compound to the bore and chamber is to dip a clean bore brush into the compound and then run it through the bore 2 or 3 times. When the weapon is placed in storage, the bolt should be in the forward position.

b. Guns should be stored in wooden packing boxes which are provided with wooden supports for the stocks and muzzles of the guns. These supports should be coated with medium rust-preventive compound. Guns should be handled with oily rags while being placed in storage. Under no circumstances should a submachinegun be placed in storage in a cloth or other cover, or with a plug in the bore; this will cause the weapon to rust. The sling should be removed from the weapon and wrapped in oil paper coated with medium rust-preventive compound.

44. Cleaning Weapons Received From Storage.

Submachineguns removed from storage will be coated with either preservative lubricating oil or rust-preventive compound. Weapons received from ordnance storage will usually be coated with rust-preventive compound. Use drycleaning solvent or volatile mineral spirits paint thinner to remove the compound or oil. Failure to thoroughly clean the driving spring recesses in the bolt may cause a malfunction or stoppage at below normal temperatures, since the rust-preventive compound will congeal during cold weather. After using solvent, dry all parts by wiping them with a dry cloth, Then apply a thin film of special preservative lubricating oil.

Downloaded from http://www.everyspec.com

45. Care and Cleaning in Connection With a CBR Attack.

a. If a chemical, biological, or radiological attack is anticipated, the following action is taken: Apply oil to all outer metal surf aces of the submachinegun and accessories. *Do not* apply oil to ammunition. If the weapon is not to be used, cover the weapon, accessories, and ammunition with protective coverings and place them under natural cover. Ammunition should be kept in its containers as long as possible.

b. After a CBR attack, determine by means of detectors whether or not the equipment is contaminated. A complete suit of protective clothing, including protective gloves and a gas mask, must be worn during decontamination. If the contamination is too great, it may be necessary to discard the equipment. Detailed information on decontamination is contained in FM 21–40 and TM 3-220.

46. Care and Cleaning Under Unusual Climatic Conditions.

a. Cold Climates. It is necessary that the moving parts will solidify and cause sluggish operation or complete failure.

(1) Before firing in temperatures below 0° Fahrenheit, disassemble the gun and clean all parts of the gun and magazine thoroughly. Oil them very lightly by rubbing them with a cloth dipped in special preservative lubricating oil. Leave the bore and chamber free of oil.

(2) When the gun is brought indoors, allow it to come to room temperature; then disassemble it, wipe it completely dry of any moisture, clean it, and oil it lightly with special preservative lubricating oil.

(3) If the gun has been fired, the bore should be immediately swabbed out with an oily patch. When the weapon reaches room temperature, clean and oil it as prescribed in paragraph 41.

b. Tropical Climates. Where temperature and humidity are high, or during rainy seasons, thoroughly inspect the weapon daily and keep it lightly oiled when not in use. Remove the groups at regular intervals and, if necessary, disassemble them for cleaning, drying, and oiling. Be careful to see that all unexposed parts, as well as exposed surfaces, are kept clean and oiled with special or medium preservative lubricating oil.

c. Hot, Dry Climates.

(1) In hot, dry climates, where sand and dust are likely to get into the mechanisms and bore, the weapon should be wiped clean daily, or oftener if necessary. Groups should be disassembled to insure thorough cleaning.

Downloaded from http://www.everyspec.com

(2) When the weapon is used under sandy conditions, lubricants should be wiped from exposed and noncritical operating surfaces. This will prevent sand or dust from sticking to the lubricants and forming an abrasive which can damage the moving parts.

(2) When the weapon is used under sandy conditions, lubricants should be wiped from exposed and noncritical operating surfaces. This will prevent sand or dust from sticking to the lubricants and forming an abrasive which can damage the moving parts.

(3) Immediately after use in sandy terrain, the weapon should be cleaned and lubricated with special preservative lubricating oil.

(4) During sand or dust storms, the gun should be kept covered. It should be cleaned immediately after the storm.

Section VI. REPAIR PARTS AND ACCESSORIES

47. Repair Parts.

a. The parts of any submachinegun may in time become unserviceable through breakage or wear resulting from usage. For this reason, extra parts are provided for replacement of parts most likely to fail. Sets of repair parts must be kept complete at all times; when a part is used, it should be replaced in the set as soon as possible. Repair parts are kept clean and lightly oiled to prevent rust. Parts must always be ready for immediate use.

b. Extra 30-round magazine are also issued with the gun. The number of magazines issued per gun, and the allowance of repair parts, are prescribed in appropriate supply publications.

48. Accessories.

Accessories include the tools required to disassemble and assemble the submachinegun, cleaning and preserving materials, sling, repair parts envelope, oiler, flash hider, magazine loader, and similar items. They must be used for no other purpose than that for which they are intended.

Section VII. AMMUNITION

49. General.

a. The soldier armed with the submachinegun must be familiar with the types of ammunition used in the weapon, ways of identifying each type of ammunition, and how to care for, handle, and use it.

160-855 0 - 94 - 4

Downloaded from http://www.everyspec.com

b. A complete round of submachinegun ammunition consists of all the components necessary to fire the weapon once. The components are a cartridge case, bullet, propellant powder, and primer.

50. Classification of Ammunition.

Contents of original ammunition boxes or containers can be identified by markings on the box. These markings indicate the number of cartridges in the container, caliber, type, code symbol, and lot number. Types, uses, and means of identification of ammunition used in submachinegun are:

a. Cartridge, Caliber .45, Ball, M1911, Used against personnel and light materiel targets. The ball bullet consists of a metal jacket surrounding a lead alloy core. The bullet tip is unpainted.

b. Cartridge, Caliber .45, Blank, M9. Used to simulate fire and for salutes. This cartridge can be fired single shot only. It can be identified by the absence of a bullet and by its tapered mouth.

c. Cartridge, Caliber .45, Dummy, M1931. Used for training personnel in the operation of loading and unloading the submachinegun, and for testing weapons. This cartridge can be identified by the empty primer pocket and two holes in the cartridge case.

d. Cartridge, Caliber .45, Tracer, M26. Used for observation of fire. Secondary uses are for incendiary effect and for signaling. The bullet consists of three parts: a copper-plated or gliding metal-clad steel jacket, a slug of lead hardened with antimony, and a tracer mixture in the rear portion of the jacket. The bullet is painted red for a distance of approximately $\frac{3}{16}$ inch from the tip.

e. Cartridge, Cailiber .45, High Density Shot, XM261. Used against personnel. It employs 16 spheres encased in a sabot similar in shape to the ball bullet.

51. Ammunition Lot Number.

Ammunition is assigned a lot number at the time of manufacture. It is marked on all packing containers and entered on all records pertaining to that ammunition. It must be included in all reports on condition and functioning of the ammunition and all reports of accidents in which the ammunition is involved. Therefore, it is important to retain the lot number with the cartridges after they are removed from their original containers. If cartridges

Downloaded from http://www.everyspec.com

cannot be identified by ammunition lot number they are automatically placed in grade 3. Grade 3 ammunition is unserviceable and will not be fired, but will be turned to the ammunition supply point.

52. Care, Handling, and Preservation of Ammunition.

a. Small arms ammunition is generally safe to handle, However, do not allow ammunition boxes to become broken or damaged. Repair broken boxes immediately. Transfer original markings to the new parts of the box.

b. Do not open ammunition boxes until the ammunition is used. Ammunition removed from airtight containers, particularly in damp climates, is likely to corrode and become unserviceable.

c. Use care when opening wooden ammunition boxes; they can be continued in use as long as they are serviceable.

d. Protect ammunition from mud, sand, dirt, and water. If it appears wet or dirty, wipe clean with a dry cloth immediately. Wipe off light corrosion as soon as it is discovered. Cartridges with a heavy coat of corrosion must be turned in to the ammunition supply point.

e. Do not oil or polish cartridges.

f. Do not expose ammunition to direct rays of the sun for any length of time. If the powder is heated, excessive pressure will be developed when the weapon is fired. This condition will affect accuracy and operation of the weapon.

g. Do not attempt to fire cartridges that have dents, scratches, loose bullets, or corroded cases. If a cartridge is defective, turn it in. Do not throw away or attempt to destroy defective ammunition.

h. Do not strike the primer of a cartridge; it may ignite the cartridge and cause injury.

53. Storage of Ammunition.

a. Small arms ammunition is not an explosive hazard; however, under poor storage conditions it may become a fire hazard.

b. Small arms ammunition should be stored away from all sources of extreme heat.

c. Whenever practicable small arms ammunition should be stored under cover. If necessary to leave ammunition in the open, it should be placed on dunnage at least 6 inches above the ground.

Downloaded from http://www.everyspec.com

It should be covered with a double thickness of tarpaulin or suitable canvas. The cover should be placed so that it gives maximum protection yet allows free circulation of air. Suitable trenches should be dug to prevent water from flowing under the ammunition.

54. Precautions in Firing Ammunition.

Precautions concerning the firing and handling of ammunition in the field prescribed in AR 385-63, TM 9-1305-200, and TM 9–1300–206 must be observed. Precautions particularly applicable to small arms ammunition include the following:

a. No small arms ammunition will be fired until it has been positively identified by ammunition lot number and grade.

b. Before firing, the firer must be sure that the bore of the pistol is free from any foreign matter. Firing a pistol with any obstruction in the bore will result in damage to the weapon and may cause injury to the firer.

55. Hangfire.

a. A hangfire is a delay in the functioning of the propelling charge or explosive train. The amount of delay is unpredictable, but in most cases will be from a fraction of a second to several seconds. Thus, a hangfire cannot immediately be distinguished from a misfire. There is a danger in immediately assuming that a failure to fire is a misfire when in fact it is a hangfire. For this reason, always wait 5 seconds before pulling the bolt to the rear after a failure to fire.

Caution. **During this time, keep the submachinegun pointed at the target.**

b. Use of ammunition in any lot that has experienced a hangfire is suspended and a report given to the ammunition supply point. The ammunition in the affected lot will be turned in and replaced with serviceable ammunition.

Downloaded from http://www.everyspec.com

CHAPTER 3

MANUAL OF ARMS

56. General.

The manual of arms for the submachinegun is designed to provide uniform, simple, safe, and quick methods for handling the gun. This chapter gives a simple and effective method of performing the manual of arms, which can be executed in cadence when precision is desired.

57. Carrying Position.

The submachinegun is carried with the magazine removed and stock telescoped, slung over the right shoulder, muzzle pointing down, with the right hand grasping the sling in front of the armpit (fig 29). When carried during dismounted marches or during field exercises, the weapon may be slung over either shoulder. When troops are at ease, the submachinegun is kept slung, unless ordered otherwise. When troops are at rest, the submachinegun may be unslung and held in any desired position. In executing the command ATTENTION, the soldier assumes the position of attention and places the submachinegun in the carrying position. Parade rest is executed in the normal manner except that the right hand continues to grip the sling and keeps the gun at sling arms.

58. Port Arms.

a. The command is PORT, ARMS.

b. Using the sling, swing the gun forward with the left hand and grasp the stock with the right hand. Withdraw the left hand from the sling, and grasp the housing assembly with the left hand. Extend the stock, then carry the gun to a position 4 inches in front-of-the body, with the barrel pointing upward and to the left at an angle of 45° and with the barrel collar at the same level as the point of the left shoulder (fig 29). Hold the gun in a vertical plane parallel to the body, with the left hand at the housing assembly and the right hand grasping the butt of the dock.

Downloaded from http://www.everyspec.com

59. Inspection Arms.

a. The command is INSPECTION, ARMS.

b. First execute port arms. With the right hand, open the cover, retract the bolt, and grasp the butt of the stock with the right hand. At the same time, lower the head and eyes enough to look into the receiver. (Be sure that the fingers of the left hand do not cover the ejection opening (fig 29)). Having seen that there is no round in the chamber, raise the head and eyes to the front. At the command PORT, ARMS, remove the right hand from the stock, press the trigger, close the cover, and grasp the butt of the stock with the right hand.

60. Present Arms.

a. The command is PRESENT, ARMS.

b. Grasp the sling in front of the armpit with the left hand, and give the hand salute with the right hand (fig 29). At the command ORDER, ARMS, drop the right hand smartly to the side, raise the right hand and grasp the sling in front of the armpit, then drop the left hand to the side.

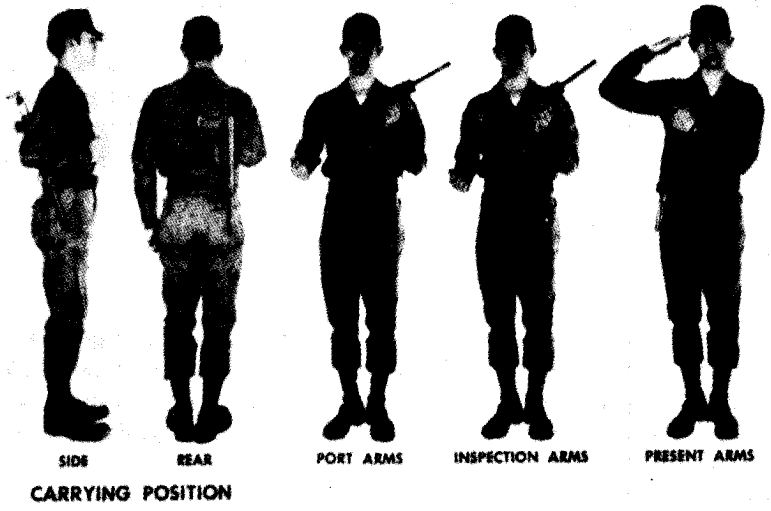

Figure 29. Manual of arms.

Downloaded from http://www.everyspec.com

61. Sling Arms.

a. Sling arms is executed on the command ORDER (or RIGHT SHOULDER), ARMS after INSPECTION ARMS and PORT, ARMS have been given.

b. At the command of execution, telescope the stock, grasp the receiver with the left hand, thrust the right arm through the sling, and assume the carrying position.

Downloaded from http://www.everyspec.com

CHAPTER 4

MARKSMANSHIP TRAINING

Section I. GENERAL

62. Introduction.

The primary use of the submachinegun is to engage the enemy at close range with accurate automatic fire. To obtain accurate fire from the submachinegun, the soldier must be trained. With proper training and a desire and willingness to learn, the soldier can deliver effective fire with this weapon.

63. Fundamentals of Marksmanship.

Accurate shooting is the result of knowing and being able to put into use the important elements of marksmanship: sighting and aiming, positions, and trigger manipulation.

64. Phases of Training.

a. Marksmanship training is divided into two phases:

(1) Preparatory marksmanship training.

(2) Range firing.

b. Each of the two phases may be divided into separate instructional steps. One very important thing to remember, during all phases of marksmanship training, is that the training must be progressive.

Section II. PREPARATORY MARKSMANSHIP TRAINING AND FAMILIARIZATION FIRING

65. General.

a. Before he receives instruction in marksmanship training, the soldier must have a good understanding of the functioning cycle. He must know how to disassemble and assemble the weapon. He must know the correct way of applying immediate action and all of the safety precautions.

Downloaded from http://www.everyspec.com

b. A thorough course in preparatory marksmanship training must precede any range firing. This training is given to all soldiers expected to fire the submachinegun. The soldier should develop fixed and correct shooting habits before going on the range. The purpose of preparatory marksmanship training is to develop these shooting habits.

c. Preparatory marksmanship training is divided into three steps:

(1) Sighting and aiming.

(2) Position.

(3) Trigger manipulation.

66. Coaching.

a. Throughout all of the preparatory training, the coach-and-pupil method of training should be used. The duties of the coach are very important. How well a man learns to shoot depends to a great extent on how well his coach does his duties. When possible, the more experienced man should serve as the coach first. The coach will assist the pupil by:

(1) Correcting any errors made.

(2) Insuring that, he takes the proper positions.

(3) Insuring that he observes all safety precautions.

b. During familiarization firing, the coach will also perform the duties listed in paragraph 72 *b.*

67. Sighting and Aiming, General.

The first step of preparatory marksmanship is sighting and aiming. Sights on the submachinegun are not adjustable. The weapon is primarily intended for firing automatic fire at short ranges where quick shooting is required. Generally the sights are used for the initial alinement of the weapon on the target. During firing, the firer can observe the strike of the rounds and bring them onto the target. In a situation where the firer desires to fire single shots or short bursts and has enough time to obtain the correct sight alinement and sight picture, he should do so. Therefore he must understand the correct sight alinement and sight picture.

68. Important Points About Sighting and Aiming.

a. The front sight must be accurately centered in the rear sight.

Downloaded from http://www.everyspec.com

b. The bull's-eye is centered above and appears to barely touch the top of the front sight.

c. The last focus of the eye is on the *front sight*. The front sight will be seen clear and sharp, while the bull's-eye will appear to be a bit fuzzy.

d. If the rounds are striking below the target, aim higher on the target. If the rounds are striking above the target, aim lower.

69. Position.

The second and most important step of preparatory marksmanship is the position exercise. To hit a target and to continue to hold a burst on a target, the firer must have a good position. The submachinegun may be fired from the standing, sitting, kneeling, prone, or assault position (figs 30 ① and. ②).

a. Standing. This is normal firing position. To assume this position, stand facing the target, then make a half right face. Move the left foot forward one step, pointing the left toe toward the target. Lean forward; bend the left knee slightly, keeping the right leg straight, with about two-thirds of the body weight on the left foot. Grasp the magazine guide with the left hand and the pistol grip with the right hand. Place the butt of the stock against the right shoulder, and twist the body (at the waist) to the left to bring the right shoulder forward. The left elbow should be under the weapon, and the right elbow should be shoulder high. Press the cheek against the stock. The recoil is slight for one shot, but in automatic fire, each time the gun recoils it will tend to push the shoulder backwards. Therefore, the gun will move off the target if the firer is not well braced and in the proper position.

b. Sitting. This position is best used when firing from ground that slopes to the front. To assume this position, face the target, half face to the right, spread the feet a comfortable distance apart, and sit down. The feet should be farther apart than the knees. Bend the body forward from the hips, keeping the back straight. Push the right shoulder slightly forward (toward the target). Place the left upper arm on the flat part of the shinbone so that the tip of the elbow is crossed over the shinbone. There should be several inches of contact between the upper arm and the shinbone. The right elbow is blocked in front of the right knee,

c. Kneeling. The kneeling position affords a steadier aim than the standing position and is useful when the firer can crouch behind a rock, log, or other protection. This position is frequently

Downloaded from http://www.everyspec.com

used on level ground or ground that slopes upward. To assume this position, face the target, half face to the right, and kneel on the right knee. Sit on the right heel, with the right thigh forming an angle of 90° with the line of aim. The entire surface of the lower right leg, from knee to toe, is in contact with the ground. The left foot should be placed about 18 inches to the front, with the toe pointing at the target. The left lower leg is vertical when viewed from the front. Move the weight of the body forward, and place the point of the left elbow a few inches forward of the knee. The right elbow is raised to the height of, or slightly below, the right shoulder.

d. Prone. This position is the steadiest and should be used whenever time and terrain permit. To assume this position, take a prone position, with the body inclined to the left of the line of aim at an angle of 20° or less. Spread the legs a comfortable distance apart, with the toes pointed outward. Keep the spine straight. Place the left elbow under the gun, with the left hand grasping the magazine guide. The right elbow is out from the body so that the shoulders are level. Place the butt of the stock the pocket formed by the shoulder, and press the cheek against the stock.

e. Assault. This position, usually called the hip position or chest position, is used for "close-in" fighting. When this position

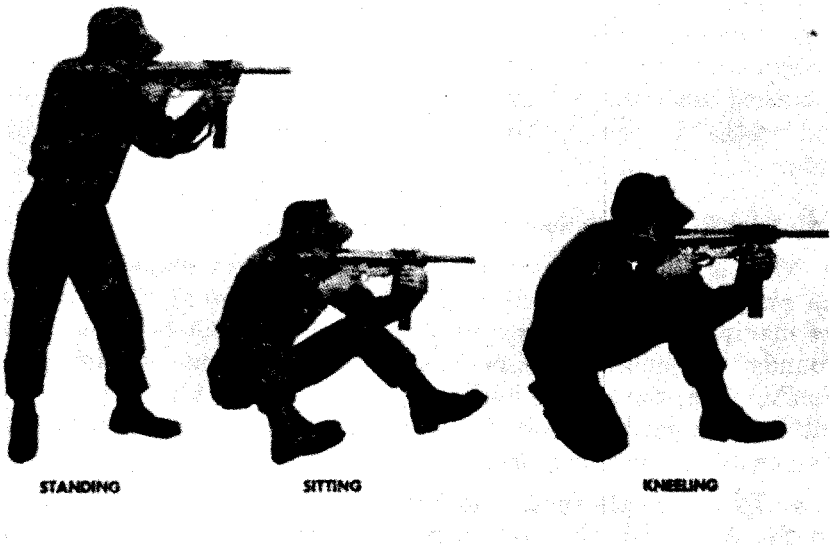

Figure 30①. Firing positions.

Downloaded from http://www.everyspec.com

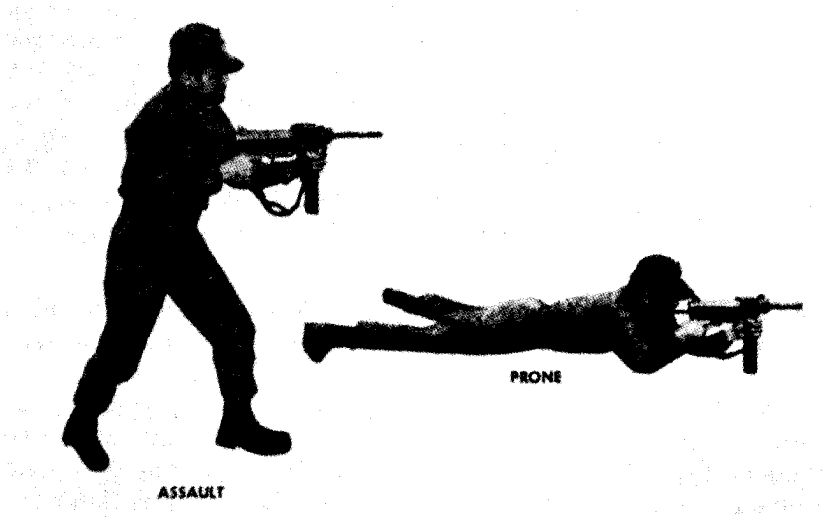

Figure 30②. Firing positions.

is used, there is less tendency of the muzzle to climb. The sights are not used to aim the weapon; the firer simply points the weapon toward the target and commences firing. The soldier must have a great deal of practice before he can do accurate shooting. To assume this position, press the stock against the side of the hip with the right arm, or place the stock under the armpit and press it against the body. The body should be in a crouched position, and the firer should walk on the balls of his feet so that he can quickly shift his body to fire at targets to his side.

70. Trigger Manipulation.

a. This is the third step of preparatory marksmanship. With an automatic weapon, the soldier does not squeeze the trigger; he manipulates the trigger to obtain a single shot or a burst of rounds. To obtain correct trigger manipulation on the submachinegun, the soldier must be given adequate-training. In addition, he must be familiar with his weapon, because the trigger pull on all submachineguns is not the same.

b. To fire single shots, the firer may press or tap the trigger to the rear until the bolt is released, then quickly release the trigger.

c. To obtain a burst of rounds, the firer holds the trigger to

Downloaded from http://www.everyspec.com

the rear until the desired number of rounds have been fired, then quickly releases the trigger.

d. To practice trigger manipulation for single shot, the soldier cocks the weapon, presses or taps the trigger, and releases it before he hears the noise of the bolt striking the guide rod locating plate. If ammunition is available, firing the weapon and becoming familiar with it is the best means of learning trigger manipulation.

71. Familiarization Firing.

The following table prescribes the familiarization firing. Preliminary instruction is conducted prior to firing. Thirty rounds of ammunition are allowed per individual. The procedure for familiarization firing is given in paragraph 72.

FAMILIARIZATION FIRING—E SILHOUETTE

Type of fire	Position	Range (Meters)	Time	Rounds
Single shot and automatic.	Standing and assault.	25	No limit	*10
Single shot and automatic.	Standing, sitting, or kneeling.	50	No limit	**10
Single shot and automatic.	Standing, sitting, or kneeling.	90	No limit	**10

*Four rounds from the standing position (single shot) and 6 rounds in a burst from the assault position.

**Four rounds single shot and 6 rounds in bursts of 3 rounds.

72. Procedure for Familiarization Firing.

a. General. This course is designed to allow the men to become familiar with the weapon. It may be set up and fired in the following manner:

(1) A straight firing line with several firing points is used, with approximately 10 to 12 feet between firing points. Stands are provided on which to place the weapons during lulls in firing. Holders for E-type targets should be placed at ranges of 25, 50, and 90 meters from the firing line. There is one target for each firing point.

(2) The E targets are first placed in the holders at the 25-meter range.

(3) Each firer has 3 magazines of 10 rounds each. Each firer has a coach who also acts as his scorer.

(4) The firers take the standing position. On the command of the officer in charge, they cock, lock, and load their guns. At the command COMMENCE FIRING, each firer fires four

Downloaded from http://www.everyspec.com

rounds, single shot, at his target. He then locks his weapon, takes the assault position, opens the cover, and fires a burst of six rounds at his target.

(5) The firers clear their weapons (checked by the coaches) and place them on the stands. On command, the firers and coaches move forward and mark and paste the targets. They then move the targets to the 50-meter range, placing them in the holders there.

(6) After moving back to the firing line, the firers take standing, sitting, or kneeling positions. On command, they cock, lock, and load their guns and commence firing. Each firer fires 4 rounds, single shot, and 2 bursts of 3 rounds each, at his target.

(7) The firers clear their weapons (checked by the coaches) and place them on the stands. On command, the firers and coaches move forward and mark and paste the targets. They then move the targets to the 90-meter range, placing them in the holders there.

(8) After moving back to the firing line, the firers take standing, sitting, or kneeling position. On command, they cock, lock, and load their guns and commence firing. Each firer fires 4 rounds, single shot, and 2 bursts of 3 rounds each, at his target.

(9) The firers clear their weapons (checked by the coaches) and place them on the stands. On command, the firers and coaches move forward and mark and paste the targets. They then bring the targets back to the 25-meter range and place them in the holders there in readiness for the next order of firers.

(10) In some cases, a pistol range maybe modified for firing this course by establishing the 25 and 90 meters.

(11) If a stoppage occurs, the firer will keep his weapon pointed down-range and notify his coach.

b. Duties of coaches. Coaches perform the duties listed in paragraph 66. In addition, they mark and paste the targets

c. Marking and pasting targets.

(1) *Procedure.* When the officer in charge has determined that the weapons are clear, he commands: MARK AND PASTE TARGETS. Firers and coaches mark and paste targets as indicated by the officer in charge.

(2) *Familiarization scores.* There are no scores for this course.

Section III. RANGE FIRING AND TARGETS, RANGES AND RANGE SAFETY PRECAUTIONS

73. Responsibility.

Unit commanders are responsible for the conduct of range prac-

Downloaded from http://www.everyspec.com

tice in accordance with the provisions of this manual and applicable Army Regulations. All range firing will be conducted under the direct supervision of a commissioned officer. No person will be permitted to fire the submachinegun on the range until he has completed the preliminary instruction.

74. Target.

The target used for familiarization firing is the E silhouette (fig 31).

75. Ranges.

The familiarization course range may be set up on a pistol range (if space permits), a rifle range, or any flat terrain.

76. Range Safety Precautions.

During firing, all personnel, including marking and scoring details, must be in a safe position. The necessary range guards must be posted and danger flags prominently displayed before firing begins. Men on the firing line must observe all safety precautions.

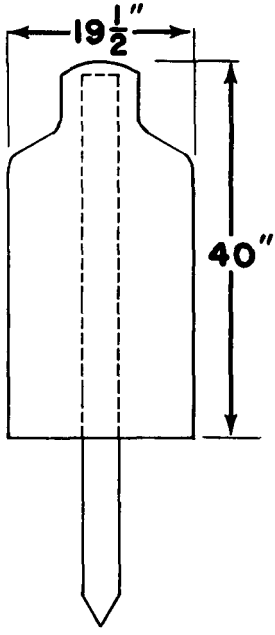

Figure 31. E silhouette target.

Downloaded from http://www.everyspec.com

CHAPTER 5

TECHNIQUE OF FIRE

Section I. TECHNIQUE OF FIRE

77. Characteristics of Fire.

a. General. The characteristics of the submachinegun govern the manner in which it is used. It is highly effective at close quarters. It is very dependable, because of the simplicity of its mechanism. The soldier who uses the weapon properly can attain considerable accuracy in firing automatic fire at close ranges.

b. Collective Firing. Collective firing is the combined firing of a group of individuals. The submachinegun is normally issued as an individual weapon. It is not issued to all members of a unit, as is the pistol, carbine, or rifle. Consequently, collective firing of submachineguns is seldom employed. The submachinegun may be used in conjunction with other weapons, especially the machinegun. When used in this manner, it is normally fired at short range targets, while the other weapon is fired at longer ranges.

78. Types of Fire Commands.

a. Formal fire commands are seldom necessary or desirable. For control on target ranges, such commands as COCK, LOCK, AND LOAD; READY; COMMENCE FIRING; and CEASE FIRING are used. In combat, fire commands, if necessary, are normally limited to COMMENCE FIRING and CEASE FIRING.

b. The target designation may be added to the fire command when the firer has not seen the target. In this case, the fire command may be given as follows: JONES, BEHIND TREE, RIGHT, COMMENCE FIRING. Normally, each soldier discovers targets and immediately takes them under fire.

79. Sample Technique-of-Fire Exercises.

In preparing exercises involving the use of the submachinegun, advantage is taken of field exercises and maneuvers to present logical situations, some phases of which would require the em-

Downloaded from http://www.everyspec.com

ployment of this weapon both from the ground and from a vehicle. These exercises should include the use of the submachinegun in the dismounted reconnaissance of a roadblock, its employment on outpost duty or in establishing march outposts, and its use by mounted scouts and armored vehicle personnel in assumed ambush situations.

a. Exercises, General. The following exercises are given as a guide and may be modified to suit the terrain, equipment, and time available. Each problem utilizes natural terrain features, equipment normally available, and actual personnel targets (all fire is simulated). The exercises should be conducted under the supervision of a commissioned officer, who will note any errors made and critique each exercise. Service ammunition is not fired during these exercises. They train the soldier and unit leader in locating targets, target designation, fire commands, and the use of the submachinegun as a supporting weapon in the unit. Every effort is made to employ the fundamentals of concealment, camouflage, and scouting and patrolling in the conduct of these exercises. Personnel acting as targets should be rotated with firers, and the targets should be shifted frequently to avoid monotony.

b. Exercise 1. A stretch of terrain not to exceed 350 meters in length and containing as many terrain features as possible-such as trees, shrubs, tall grass, ditches, logs, and walls—is selected for the course. Actual personnel targets are placed along a designated path, at various ranges from the path and in normal concealment. Typical targets include prone, kneeling, and standing soldiers, moving individuals and groups, machineguns with normal crews, and mounted scouts. The firer is required to proceed down the designated path and locate targets. When he discovers a target, he takes a firing position and simulates firing on the target. He is accompanied by an instructor, who checks all phases of the firer's actions and points out any errors made.

c. Exercise 2. A roadblock is established in a suitable location. It is held by a detachment of soldiers armed with submachineguns and rifles. Either a dismounted soldier with submachinegun, a mounted scout with submachinegun, an armored vehicle with submachinegun as an alternate weapon, or any combination of these, may operate against the roadblock. A commissioned officer should accompany the individual or the vehicle. He checks and instructs in procedure and critiques the exercise, including any commands given by a vehicle commander.

d. Exercise 3. A small area in which buildings predominate, and which can be presumed to be a village or city street, should

Downloaded from http://www.everyspec.com

be selected for this exercise. It should be possible for personnel to occupy buildings, roofs, and windows and to erect barricades. Personnel armed with submachineguns and mounted in armored vehicles should be required to operate against personnel in buildings and to reduce barricades. This type of problem is especially beneficial in training for mounted and dismounted action, collective firing with other weapons, and proper leadership. All actions by individuals, squad or platoon leaders, and units should be carefully checked by a commissioned officer. The exercise should be reviewed and critiqued immediately upon completion.

Section II. FIRING AT MOVING GROUND TARGETS

80. General.

a. All personnel armed with the submachinegun should be trained to fire at moving vehicular and personnel-type targets. Normally such fire will be delivered at short ranges in short bursts. The high rate of fire, and the ability of the soldier to move the direction of fire at will, make the submachinegun particularly effective against moving personnel. The soldier must be trained to employ his submachinegun effectively and quickly. He must be trained in the proper use of the sights and methods of leading the target at short ranges.

b. Moving targets are seldom exposed for long periods and usually move at maximum speed during periods of exposure.

81. Use of Leads.

When targets are crossing the line of sight, the firer must aim ahead of the target so that the bullet and target will meet. The distance aimed ahead of the target is called the *lead.* For personnel targets moving across the line of sight, the point of aim should be slightly in front of the body, and the lead should be corrected by observation of the fire. Targets that approach directly toward the firer or move directly away from him require no lead.

82. Determination of Leads.

The lead necessary to hit a moving target depends upon the speed of the target, the range of the target, and the direction of movement with respect to the line of sight. Moving at 10 miles per hour, a vehicle travels approximately its own length in 1 second. The velocity of a bullet from the submachinegun is approximately 900 feet in 1 second.

Downloaded from http://www.everyspec.com

83. Application of leads.

a. Leads are applied by using the length of the target (TL), as it appears to the firer, as a unit of measure. This eliminates the necessity for corrections due to the angle at which the target crosses the line of sight; because the more acute the angle, the shorter the target appears, and the less lateral speed it attains.

b. The following lead table for vehicles is furnished as a guide:

Miles per hour	Range 90 meters or less
10	1/3 TL
20	2/3 TL

84. Techniques of Fire at Moving Targets.

a. The firer uses the following technique in firing at moving targets.

(1) *Approaching or receding targets.* The firer holds his aim on or above the center of the target (depending upon the range) and fires in short bursts.

(2) *Crossing vehicular targets.* The firer estimates the proper amount of lead, alines his sights on or above the bottom of the target at its rearward point (depending upon the range), swings straight across the target to the estimated lead, and fires short bursts, keeping the proper lead.

(3) Grossing personnel targets. The firer takes aim slightly in front of the center of the body of the target, with proper adjustment for range, and fires short bursts. He changes the lead and range as necessary after observing the effect of the bursts.

b. The high rate of fire of the submachinegun allows the firer to cover the target with fire and to improve his lead and range estimation by actual observation of the effectiveness of his fire.

Downloaded from http://www.everyspec.com

CHAPTER 6

DESTRUCTION OF MATERIEL

85. Authority.

The decision to destroy ordnance materiel to prevent its capture and use by the enemy is a command decision.

86. Principles Governing Destruction.

The following are the fundamentals to be observed in executing an order to destroy small arms.

a. The destruction must be as complete as the circumstances will permit.

b. If there is insufficient time for complete destruction, the parts essential to operation of the weapon must be destroyed, beginning with those parts most difficult for the enemy to duplicate.

c. The same essential parts of each weapon must be destroyed, to prevent the reconstruction of a complete weapon from several damaged ones.

87. Training in Destruction.

Before reaching the combat zone, soldiers must be trained to quickly and adequately destroy their individual weapons in an established and uniform sequence, based on the principles stated in the above paragraph. Training will not involve actual destruction of materiel.

88. Method for the Destruction of the Submachinegun.

Remove and dispose of the bolt and guide rod group. Smash the receiver and stock against a tree, rock, or other hard surface until bent and twisted. Smash or burr the threads of the barrel collar.

89. Destruction of Ammunition.

When time and materials are available, ammunition may be destroyed as follows: Break out all packed ammunition from boxes

Downloaded from http://www.everyspec.com

or cartons. Stack the ammunition in a pile. (If possible, the pile should be placed in a depression or hole, to lessen the danger to personnel performing the destruction operation.) Stack or pile all available flammable material, such as scrap wood or brush, over the ammunition. Pour gasoline or oil over the pile. Sufficient flammable material must be used to insure a very hot fire. Ignite the material and take cover. A period of 30 to 60 minutes will be required to destroy the ammunition carried by small combat units.

Downloaded from http://www.everyspec.com

CHAPTER 7

ADVICE TO INSTRUCTORS

Section I. GENERAL

90. Purpose.

The material contained in this chapter is advisory and should be considered as a guide only. It is not intended to limit the imagination and initiative of the instructor.

91. Assistant Instructors.

Train, in advance of classes, as many demonstrators and assistant instructors as will be needed. Rehearse them carefully in the duties they are to perform. Only by rehearsals can the instructor insure effective demonstrations and efficient work by assistant instructors.

92. Training Schedules.

To aid in the individual training phase, a training schedule for a course in marksmanship training/familiarization firing is shown in appendix B. This schedule is based on the desirable number of training hours for proper submachinegun training. Use it as a guide in preparing lesson plans. Conditions may require a longer or shorter period to complete the training. When time is available, more training should be added to the schedule. When suggested references, equipment, and training aids are not available, improvise or substitute the best that are available. All references in the training schedule, unless otherwise noted, are to this manual.

93. Training Notes, Mechanical Training.

a. Instruction in mechanical training will be conducted in a sequence that insures the uniform progress of the unit.

b. The instructor briefly explains the subject to be covered. The assistants demonstrate the proper procedure for clearing the

Downloaded from http://www.everyspec.com

weapon. The soldiers then clear their weapons. The instructor names the parts, and the assistants point out each part as it is named. The assistants demonstrate disassembly and assembly and then supervise the students during practical work on disassembly and assembly.

c. The instructor teaches functioning, stoppages, and malfunctions with the use of visual aids.

94. Training Notes, Familiarization Firing.

a. The purpose of familiarization firing is to give the soldier enough training to enable him to maintain and fire the submachanegun during an emergency.

b. If the soldiers have received training on other weapons, the time spent on sighting and aiming may be reduced.

Section II. RANGE FIRING

95. Inspection of Submachinegun.

All submachineguns should be carefully inspected far enough in advance to permit the replacement of defective weapons before the training period begins.

96. Inspection of Ranges.

All ranges to be used are carefully inspected far enough in advance of the period of use to permit changes or repairs when necessary. Targets and other equipment must be in the best Possible state of repair when range firing begins.

Section III. TRAINING AIDS

97. General.

In conducting training, make the greatest possible use of working models, charts, and other suitable visual training aids. Excellent submachinegun training aids are available through normal supply channels, or they can be constructed locally. Some recommendations and suggestions concerning the construction and use of the various training aids are listed below.

a. Scrap lumber in good condition may be used to construct models. Hardwood is recommended for model parts that rub together or have strain on them. Other materials which are needed in making models are nails, screws, and springs.

b. Charts and models should be painted with contrasting colors to help the class locate the various parts.

Downloaded from http://www.everyspec.com

c. Models should be mounted on stands so that they can be seen by the entire class.

d. All lettering on charts, models, and other training aids must be large enough to be read easily. Lettering 2½ inches high is readable at a distance of 75 feet.

e. Charts that are painted or drawn on heavy paper will be just as satisfactory as those painted on wood, except that charts painted on wood will withstand harder usage than paper charts.

f. Before using a multicolored chart or working model, explain the meaning of the various colors.

98. Wooden Working Model.

A large-scale working model (fig 32) is an excellent training aid for teaching functioning of the submachinegun. Figures 33 ① through ③ show the dimensions of the parts, and a detailed plan of construction is given below.

a. Cut out the parts.

b. Paint the outline of the receiver on a sheet of ½-inch plywood.

c. Position the rails for the barrel (B), place the cartridge between the rails, and fasten the rails to the receiver with screws.

d. Position the guide rod (C). The bottom of the guide rod should be 4⅜ inches below the top of the receiver. Fasten it to the receiver with screws.

e. Slide the bolt forward on the guide rod.

f. Position the guide rod retaining plate (D), and fasten it to the receiver with screws.

g. Position the magazine follower (E) by placing the cartridge on top of the follower. Move the bolt forward. The bolt will push the cartridge forward; guide it (by hand) into the chamber. Mark a path for the lug of the cartridge. Recess the path of the lug (A) to a depth of ¼-inch. When the model will feed and chamber the cartridge fasten the follower to the receiver.

h. Assemble the trigger, connector, and sear (F), using a 1-inch dowel rod.

i. Position the trigger and sear group on the receiver.

j. Place the trigger pin in position, and fasten it to the receiver with screws.

Downloaded from http://www.everyspec.com

k. Place the sear pin in position, and fasten it to the receiver with screws.

l. Place on the trigger spring (use a salvage driving spring).

m. Chamber the cartridge, and place stops in the barrel to prevent the cartridge from going completely into the barrel.

n. Paint the ejector on the receiver.

99. Charts and Other Aids.

a. Some of the points that can best be presented by a chart are:

(1) Steps in functioning.
(2) Stoppages.
(3) Steps in care and cleaning.
(4) Characteristics and general data.
(5) Range orientation.

b. Other helpful training aids which can be obtained through normal supply channels are:

(1) Training films and film strips.
(2) Graphic training aids.

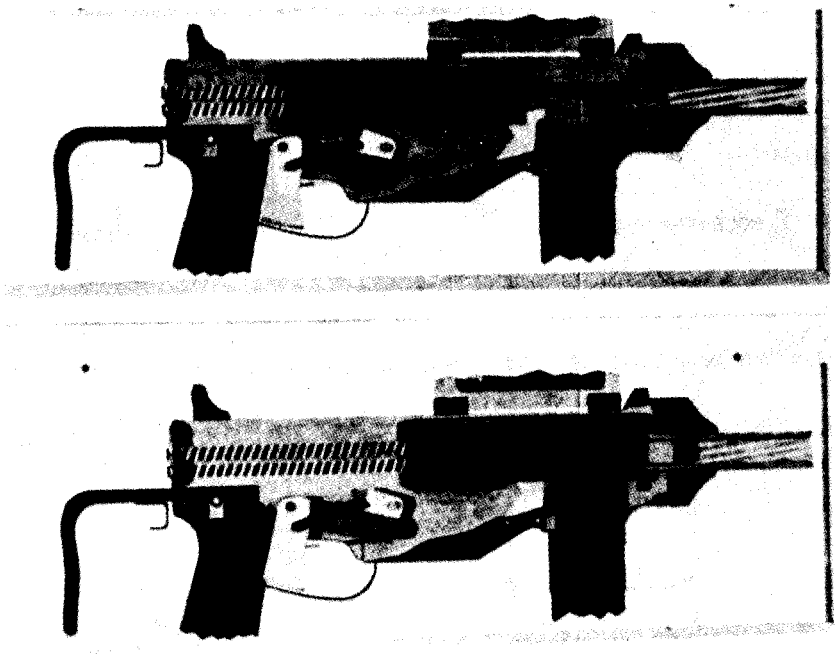

Figure 32. A wooden working model.

Downloaded from http://www.everyspec.com

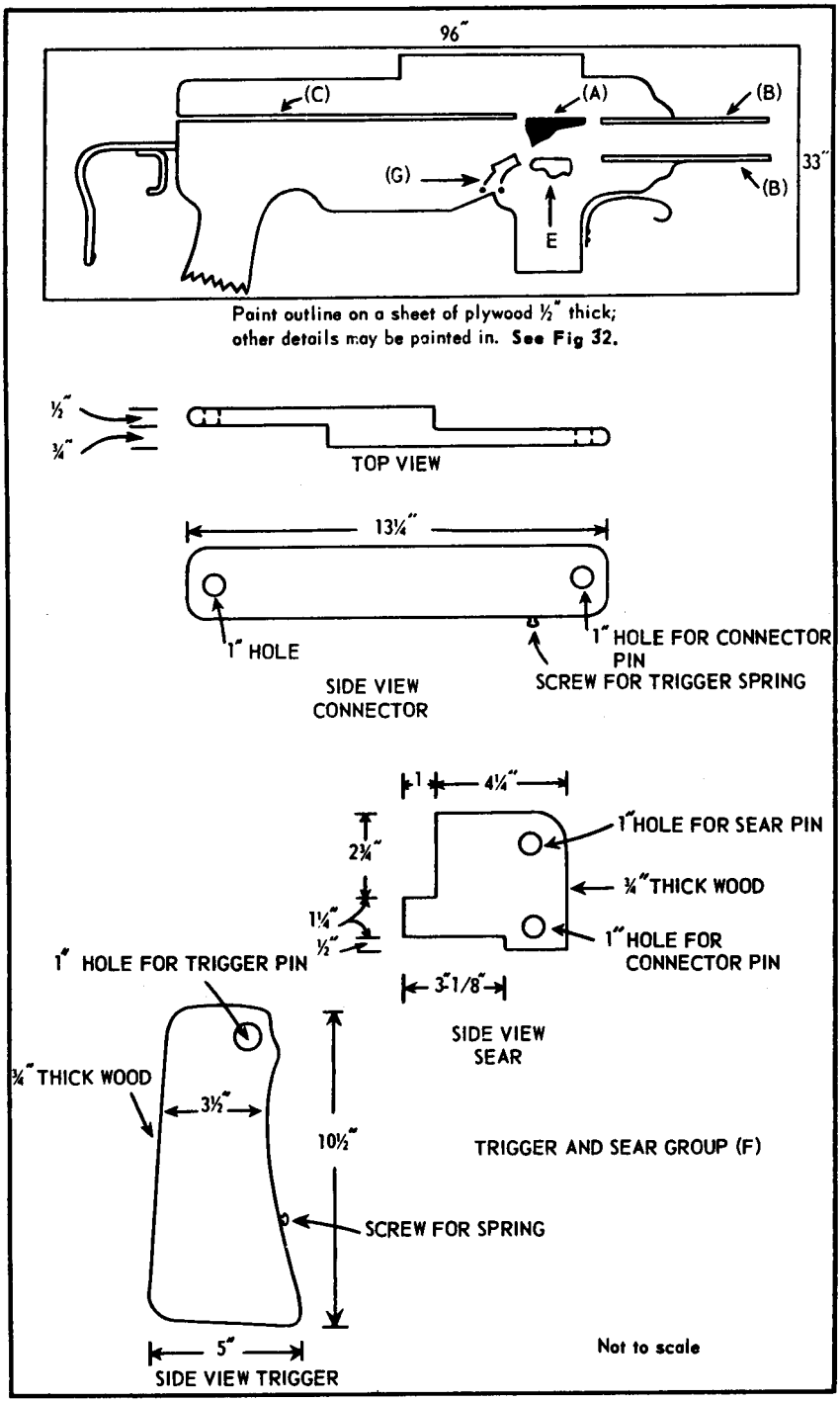

Figure 33①. Diagram of working model.

Downloaded from http://www.everyspec.com

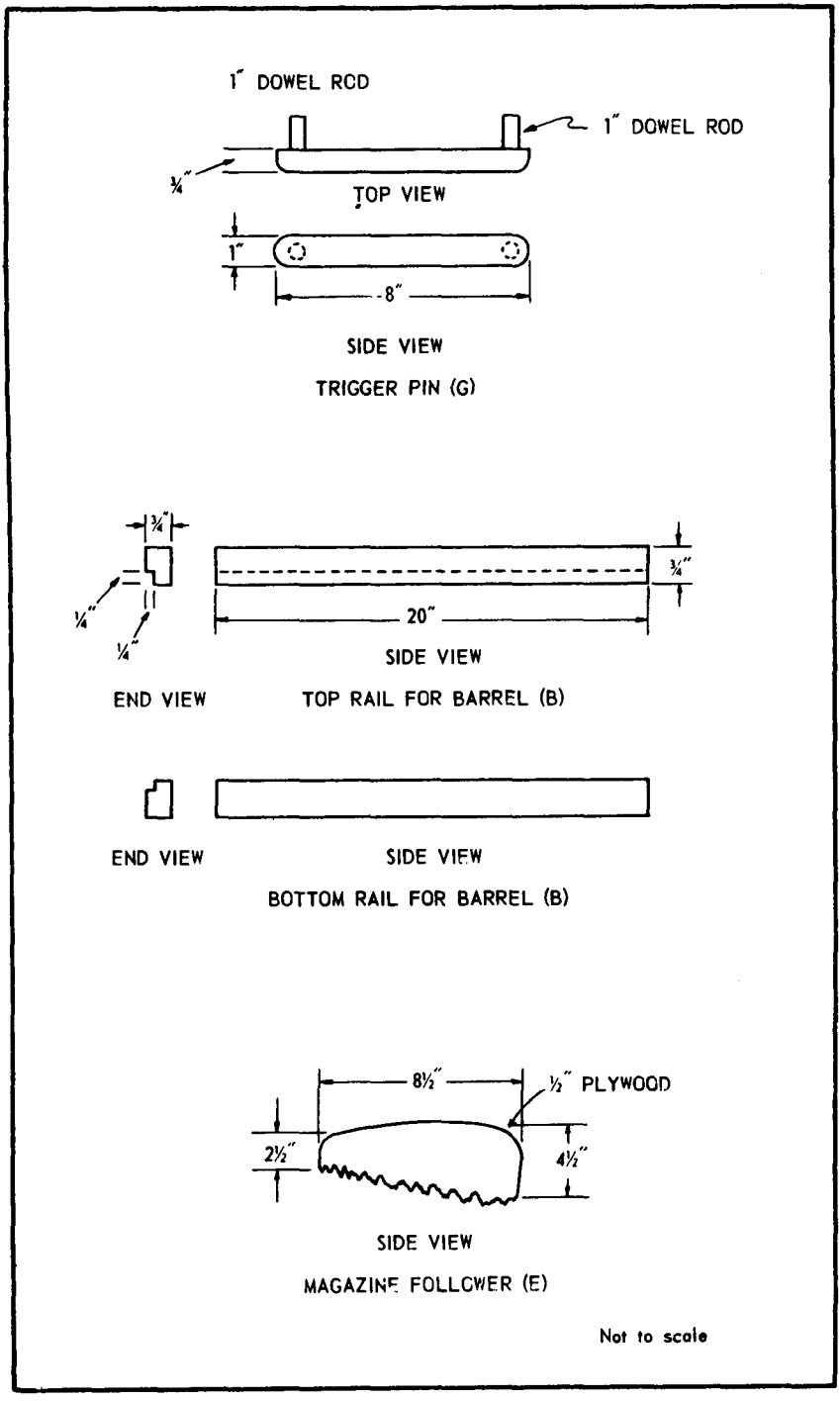

Figure 33③. Diagram of working model.

Downloaded from http://www.everyspec.com

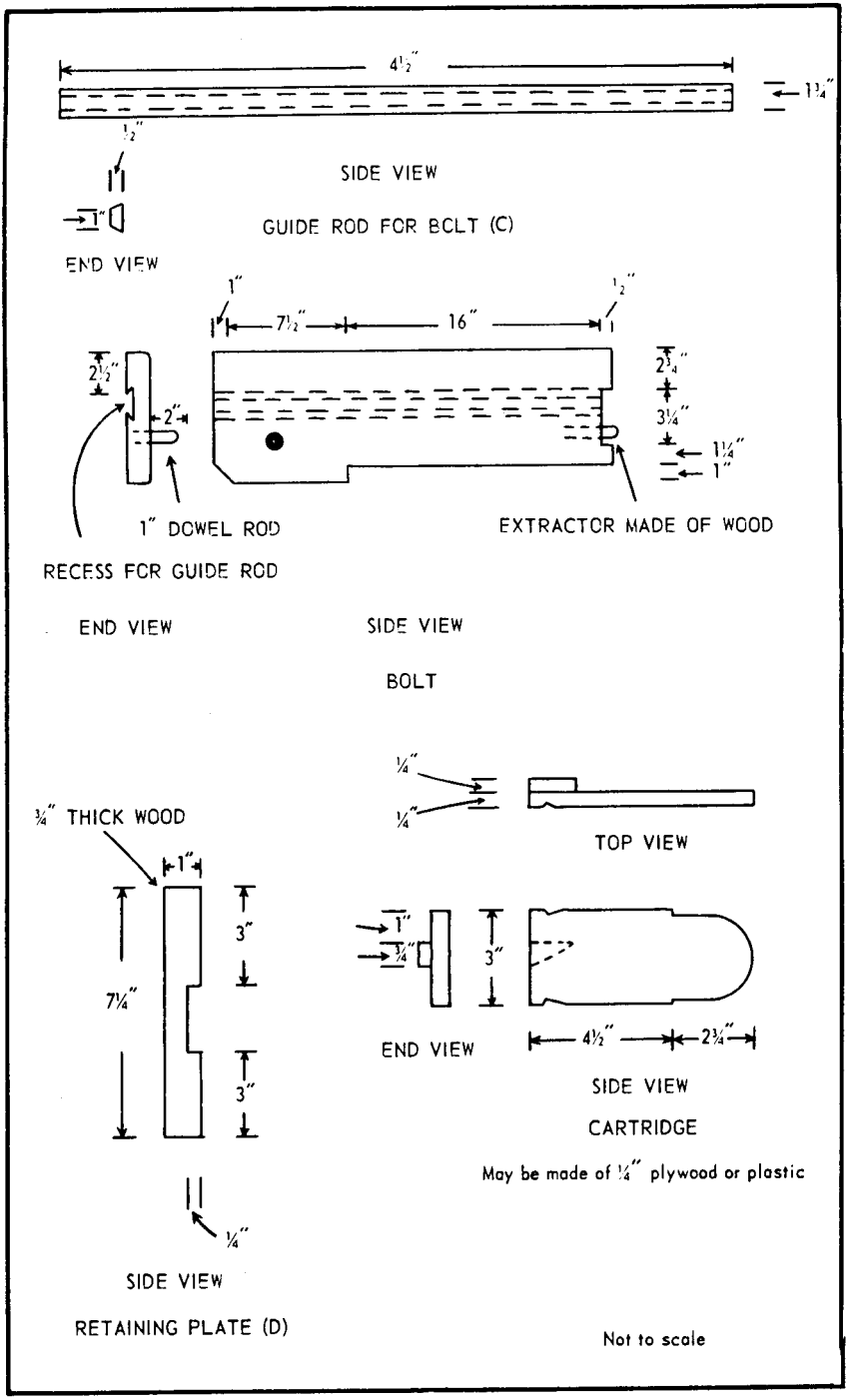

Figure 33③. Diagram of working model.

Downloaded from http://www.everyspec.com

CHAPTER 8

SAFETY PRECAUTIONS

100. General.

a. The safety of personnel is the primary concern of everyone during any exercise in which live ammunition is fired. To minimize the possibility of accidents, certain safety regulations have been established and currently are published in AR 385-63. The safety precautions given in this chapter are intended to emphasize and supplement the regulations in AR 385-63.

b. All officers conducting any type of firing are responsible for:

(1) Becoming familiar with all safety rules, general and local, pertaining to that type of firing and to the type weapons and ammunition being fired.

(2) Teaching all men on the ranges the meaning of these safety rules.

c. Each man is responsible for his own safety and that of others around him. Each man is required to enforce safety regulations on the range.

101. Safety Precautions, Mechanical Training.

a. Start observing safety precautions as soon as you receive a weapon. Always check the chamber and receiver to insure that there is no live cartridge in the weapon.

b. Never playfully or carelessly point a weapon at anyone.

c. Check all dummy cartridges to make sure that there is no live ammunition among them.

102. Safety Precautions, Preparatory Marksmanship Training.

a. Develop the habit of keeping the muzzle pointed up or down range.

Downloaded from http://www.everyspec.com

b. Carry the weapon with the magazine removed, chamber empty, bolt forward, and cover closed.

c. Comply with all commands of the officer in charge and the coach.

103. Safety Precautions, Range Firing.

a. Safety precautions must be observed on the range, A safety officer / NCO should be designated with the specific duty of insuring that all safety precautions are being observed. Each coach will require his firer to observe safety precautions.

b. Safety precautions listed above for mechanical training and preparatory marksmanship training also apply during range practice.

c. Precautions to be observed prior to firing include:

(1) Do not draw or issue ammunition until the officer in charge of firing gives the command.

(2) Do not start firing until:

(a) All personnel are oriented regarding safety regulations and other pertinent information.

(b) Roadblocks are established and road guards are posted.

(c) A red streamer is displayed from a prominent place on the range.

(d) All weapons are checked by an officer to insure that none contain live ammunition. The bores of weapons to be fired must be checked to insure that they contain no obstructions such as rust-preventive compound, cleaning patches, mud, or snow.

(e) Markers are placed at the right and left safety limits, and personnel are warned not to fire outside of the markers.

d. Precautions to be observed during firing include:

(1) Weapons will be loaded and unloaded on the firing line, on command of the officer in charge.

(2) The commands COMMENCE FIRING and CEASE FIRING are given loud and clear (whistle signals may be used when necessary). Anyone who considers it necessary to insure safety may give the command CEASE FIRING. When a firer hears the command CEASE FIRING, he will take his finger off the trigger, close the cover, and wait for further instructions.

(3) As soon as the firing exercise is completed, or on command, the firer will clear his weapon.

Downloaded from http://www.everyspec.com

(4) No one will move in front of the firing line unless directed to do so by the officer in charge, who, before giving the command, will have all weapons cleared, checked by the safety officer/NCO or coach, and grounded.

(5) No weapon is moved in front of the firing line.

(6) No weapon will be removed from the firing line until it has been checked, by the safety officer/NCO or one of his representatives, to see that it is clear.

(7) Proper care will be given ammunition (para 52).

(8) All accidents will be immediately reported to the officer in charge. AR 385–63 prescribes the report that will be made for accidents involving faulty weapons or ammunition. AR 385-40 prescribes the report that will be made for accidents that are not the result of faulty weapons or ammunition.

(9) When guns are being fired from vehicles, a red flag will be displayed on each vehicle while the gun in that vehicle is loaded.

e. Precautions to be observed after firing include:

(1) All brass and live cartridges will be kept separate. Brass will be inspected to insure that there are no empty cartridge cases with unexploded primers.

(2) All cardboard ammunition cartons will be inspected to insure that they contain no live cartridges or brass.

(3) Before any weapon is removed from the firing line or from the range, it will be checked to insure that it contains no live ammunition.

(4) All personnel are inspected to insure that no unauthorized person is carrying live ammunition or brass from the range.

(5) All range flags are taken down, and the road guards are withdrawn from their posts.

Downloaded from http://www.everyspec.com

APPENDIX A

REFERENCES

1. Army Regulations (AR)

350-4	Qualification and Familiarization with Weapons and Weapon Systems.
385-40	Accident Reporting and Records.
385-63	Regulations for Firing Ammunition for Training, Target Practice and Combat.

2. DA Pamphlets (DA Pam)

108-1	Index of Army Motion Pictures and Related Audio-Visual Aids.
310-3	Index of Doctrinal, Training, and Organizational Publications.
310-4	Military Publications: Index of Technical Manuals, Technical Bulletins, Supply Manuals (Types 7, 8, and 9), Supply Bulletins, and Lubrication Orders.
310-7	Military Publications US Army Equipment Index of Modification Work Orders.

3. Field Manuals (FM)

21-5	Military Training Management.
21-6	Techniques of Military Instruction.
21-40	Chemical, Biological, Radiological, and Nuclear Defense.
22-5	Drill and Ceremonies.

4. Technical Manuals (TM)

3-220	Chemical, Biological, and Radiological (CBR) Decontamination.
9-1005-229-12	Operator's and Organizational Maintenance Manual, Including Repair Parts and Special Tools Lists: Submachineguns, Caliber .45: M3, w/e (1005-672-1767); Subma-

Downloaded from http://www.everyspec.com

chinegun, Caliber .45: M3A1, w/e (1005-672-1771).

9-1005-229-35 DS, GS, and Depot Maintenance Manual, Including Repair Parts and Special Tool Lists for Submachineguns, Caliber .45: M3, w/e (1005-672-1767); Submachinegun Caliber .45: M3A1, w/e (1005-672-1771).

9–1300-206 Ammunition and Explosives Standards.

9-1305-200 Small-Arms Ammunition (TO llA13-l-101).

9-6920–210–14 Operator, Organizational, DS and GS Maintenance Manual, Including Basic Issue Items List and Repair Parts List: Small Arms Targets and Target Material. (NAVPERS 15217; AFM 50-27 ; TM 6920-14/1.)

Downloaded from http://www.everyspec.com

APPENDIX B

TRAINING SCHEDULE

1. General.

To aid in the individual training phase, a training schedule for submachinegun marksmanship training/familiarization firing is shown in paragraph 2. This schedule is based on the desirable number of training hours for submachinegun training. Use it as a guide in preparing lesson plans. Conditions may require a longer or shorter period to complete the training. When time is available, more training should be added to the schedule. When suggested equipment and training aids are not available, improvise or substitute the best that are available.

2. Training Schedule.

a. This training schedule may be used as a guide for the instructor in preparing lesson plans and for scheduling periods of instruction. Training problems peculiar to a given unit or installation may necessitate modification of some portions of the training outlined herein.

(1) Training management will be guided by FM 21-5.

(2) In order to teach effectively, the military instructor must be familiar with the principles and techniques defined and discussed in FM 21–6.

(3) Active Army units should supplement this schedule with additional training hours, if available, to more adequately train the soldier.

b. Submachinegun, caliber .45, M3/M3A1 (familiarization training) (10 hours).

Downloaded from http://www.everyspec.com

Period	Hours		Lesson	Text references	Area	Training aids and equipment
	Peace	Mobilization				
1	1	1	MECHANICAL TRAINING (2 hours) Characteristics, general data, nomenclature, disassembly assembly.	FM 23–41, para 3–15.	Classroom or field.	*For instructor:* Submachinegun, dummy cartridges, chalkboard, T9–6–23, overhead projector and screen, FB 7–273 and movie projector. *For student:* Submachinegun, dummy cartridges, GTA 9–618.
2	1	1	Functioning, care, and cleaning; malfunctions, stoppages, immediate action, loading, unloading, ammunition, safety precautions.	FM 23–41, para 16–46, 49–55.	Classroom or field.	*For instructor:* Same as period 1 plus working model and cleaning materials. *For student:* Same as period 1 plus cleaning materials.
3	2	2	PREPARATORY MARKSMANSHIP TRAINING (2 hours) Three steps of marksmanship training (sighting, and aiming, positions, trigger manipulation); technique of fire.	FM 23–41, para 62–70, 77–84.	Classroom or field.	*For instructor:* Submachinegun, submachinegun rest, sight picture model, and chalkboard. *For student:* Same as instructor less chalkboard.
4	3	3	RANGE FIRING (3 hours) Familiarization firing, safety precautions.	FM 23–41, para 90–96, 100–103; AR 685–63 and AR 385–40.	Range	All range equipment.

Downloaded from http://www.everyspec.com

INDEX

	Paragraph	Page
Accessories	48	41
Advice to instructors	90	62
After-firing care and cleaning	41	37
After-storage cleaning	44	39
Aids, training	97	63
Aiming. (*See* sighting and aiming)	67	49
Ammunition	49	41
Care, handling, and preservation	52	43
Classification	50	42
Destruction	89	60
Hangfires	55	44
Identification	50	42
Lot numbers	51	42
Precautions in firing	54	44
Storage	53	43
Application of leads	83	59
Armorer, disassembly	8	8
Assembly:		
Field disassembly, after	12	17
Groups	14	25
Guides to follow	9	9
Housing, functioning	25	29
Assault position	69	50
Assistant instructors	91	62
Authority, destruction of materiel	85	60
Authorization for disassembly	8	8
Barrel, data	4	6
Before-firing care and cleaning	39	37
Biological attack, care and cleaning	45	40
Bolt and guide rod group:		
Assembly	14	25
Disassembly	13	20
Building ranges	75	55
Bursts, firing	70	52
Care and cleaning	37	35
After firing	41	37
Ammunition	52	43
Before firing	39	37
CBR attack	45	40
Combat conditions	42	38

Downloaded from http://www.everyspec.com

	Paragraph	Page
Care and cleaning—Continued		
During firing	40	37
Preparation for storage	43	39
Unusual climatic conditions	46	40
Carrying position	57	45
Cartridge. (*See* ammunition.)		
Causes of stoppages	35	34
Chambering	16, 20	26, 28
Characteristics of fire	77	56
Charts	99	65
Check, operation	15	25
Chemical attack, care and cleaning	45	40
Classification of ammunition	50	42
Cleaning. (*See* also care and cleaning.)		
Materials	38	36
Weapons received from storage	44	39
Coaching	66	49
Cocking	16, 24	26, 29
Cold climates, care and cleaning in	46	40
Collective firing	77	56
Commands, fire	78	56
Common stoppages	35	34
Wooden working model	98	64
Cycle of operation	16	26
Data	4	6
Decontamination	45	40
Description:		
Ranges	75	55
Submachinegun	3	3
Destruction of materiel	85	60
Detailed disassembly	13	20
Determination of leads	82	58
Differences in models	5	7
Disassembly	6, 8	8
Field	10, 11	9
Groups	13	20
Guides to follow in	9	9
Dry climates, care and cleaning in	46	40
During combat, care and cleaning	42	38
During firing, care and cleaning	40	37
Ejecting	16, 23	26, 29
Exercises:		
Technique of fire	79	56
Extracting	16, 22	26, 29
Failures	33, 35	33, 34
Familiarization firing, procedure	71, 72	53
Feeding	16, 19	26, 28
Field disassembly	10, 11	9
Filling the magazine	28	30
Fire commands	78	56

Downloaded from http://www.everyspec.com

	Paragraph	Page
Firing	16, 21, 30	26, 28, 30
Familiarization	71, 72	53
Moving ground targets	80	58
Ranges. (*See* ranges.)		
Functioning	16, 17	26, 27
Housing assembly	25	29
Safety lock	26	30
Fundamentals of marksmanship	63	48
Gas attack, care and cleaning after	45	40
General data, description	3, 4	3, 6
Groups, disassembly of	13	20
Guide rod and bolt group:		
Assembly	14	25
Disassembly	13	20
Guides for disassembly, assembly	9	9
Handling of ammunition	52	43
Hangfires	55	44
Hot climates, care and cleaning in	46	40
Housing assembly:		
Disassembly	13	20
Functioning	25	29
Identification of ammunition	50	42
Immediate action	36	35
Important points, sighting and aiming	68	49
Importance of training	1	3
Individual:		
Soldier, disassembly by	8	8
Inspection:		
Arms	59	46
Ranges	96	63
Submachinegun	95	63
Instructors, advice	90	62
Kneeling position	69	50
Leads:		
Application	83	59
Determination	82	58
Use	81	58
Loading:		
Magazine	28	30
Submachinegun	29	30
Lock, safety, functioning	26	30
Lot number, ammunition	51	42
Lubrication	38, 46	36, 40
Magazine:		
Assembly	14	25
Disassembly	13	20
Loading	28	20
Maintenance. (*See* care and cleaning.)		

Downloaded from http://www.everyspec.com

	Paragraph	Page
Malfunctions	33, 34	33
Manipulation, trigger	70	52
Manual of arms	56	45
Carrying position	57	45
Inspection arms	59	46
Port arms	58	45
Present arms	60	46
Sling arms	61	47
Markings, ammunition	50	42
Marksmanship. (*See* also firing.)		
Fundamentals	63	48
Training	62	48
Materials, cleaning	38	36
Mechanical training	93	62
Safety precautions	101	69
Method. (*See* procedure.)		
Models:		
Differences in	5	7
Wooden working	98	64
Moving ground targets:		
Firing	80	58
Nomenclature	7	8
Notes, training	93, 94	62, 63
Number, ammunition lot	51	42
Nuclear attack, care and cleaning	45	40
Oil, lubricating	38	36
Operation. (*See* also functioning.)		
Check	15	25
Filling magazine	28	30
Firing submachinegun	30	30
Loading submachinegun	29	30
Malfunctions	33, 34	33
Submachinegun	27	30
Unloading submachinegun	31	33
Ordnance personnel, disassembly	8	8
Parts:		
Nomenclature	7	8
Repair	47	41
Phases of training	64, 65	48
Port arms	58	45
Positions	69	50
Precautions. (*See* safety precautions.)		
Preparatory marksmanship training	65	48
Preparation of gun for storage	43	39
Present arms	60	46
Preservation of ammunition	52	43
Prevention of stoppages	35	34
Preventives, rust	38	36
Principles, destruction of materiel	86	60

Downloaded from http://www.everyspec.com

	Paragraph	Page
Procedure:		
Assembly after field disassembly	12	17
Care and cleaning	37, 46	35, 40
Destruction of materiel	88, 89	60
Familiarization firing	72	53
Field disassembly	11	9
Manual of arms	57, 61	45, 47
Prone position	69	50
Radiological attack, care and cleaning after	45	40
Range:		
Dismounted practice	75	55
Firing, responsibility	73	54
Safety precautions	76, 100, 103	55, 69, 70
Repair parts	47	41
Responsibility:		
Range firing	72	53
Safety precautions	100	69
Runaway gun	34	33
Rust preventives	38	36
Safety:		
Lock	26	30
Precautions	32	33
Ammunition	52, 54, 55	43, 44
Mechanical training	101	69
Range	103, 76	70, 55
Responsibility for	100	69
Sample technique-of-fire exercises	79	56
Schedules, training	92	62
Sear and trigger group:		
Assembly	14	25
Disassembly	13	20
Functioning	18	28
Sequence of functioning	17	27
Sighting and aiming	67	49
Important points about	68	49
Single shots, firing	70	52
Sitting position	69	50
Sling arms	61	47
Sluggish operation	34	33
Spare parts	47	41
Standing position	69	50
Steps in functioning	16	26
Stoppages	35	34
Storage:		
Ammunition	53	43
Cleaning weapons after	44	39
Preparation for	43	39
Table:		
Familiarization firing	71	53
Leads	83	59

Downloaded from http://www.everyspec.com

	Paragraph	Page
Targets:		
Firing	80	58
Stationary	74	55
Technique:		
Fire	77	56
Moving targets	84	59
Trigger manipulation	70	52
Training:		
Aids	97	63
Destruction of materiel	87	60
Importance	1	3
Marksmanship	62	48
Phases	64	48
Preparatory	65	48
Notes	93, 94	62, 63
Schedules	92	62
Trigger:		
Manipulation	70	52
Sear group. (*See* sear.)		
Tropical climates, care and cleaning	46	40
Types:		
Ammunition	50	42
Fire commands	78	56
Uncontrolled fire	34	33
Unloading submachinegun	31	33
Use of leads	81	58
Wooden working model	98	64

Downloaded from http://www.everyspec.com

By Order of the Secretary of the Army:

CREIGHTON W. ABRAMS
General, United States Army
Chief of Staff

Official:

VERNE L. BOWERS
Major General, United States Army
The Adjutant General

Distribution:

Active Army, ARNG, USAR: To be distributed in accordance with DA Form 12–12, requirements for training publications for all Units Organized Under TOE 7 and 17 series TOE.