Downloaded from http://www.everyspec.com

FUNDAMENTALS AND PROCEDURES OF AIRFRAME MAINTENANCE

DISTRIBUTION RESTRICTION: Aproved for public release; distribution is unlimited

HEADQUARTERS, DEPARTMENT OF THE ARMY

Downloaded from http://www.everyspec.com

FIELD MANUAL
NO. 1-563

HEADQUARTERS
DEPARTMENT OF THE ARMY
Washington, DC, 30 September 1991

FUNDAMENTALS AND PROCEDURES OF AIRFRAME MAINTENANCE

TABLE OF CONTENTS

Page

PREFACE vi

CHAPTER 1. BASIC AIRCRAFT INFORMATION

SECTION I. AERODYNAMIC FORCES

FOUR FORCES AFFECTING AN AIRCRAFT 1-1
ANGLE OF ATTACK 1-2
AIRFOIL SPEED 1-3
AIR DENSITY 1-3
AIRFOIL SHAPE 1-3

SECTION II. MAIN STRUCTURAL UNITS

STRUCTURE 1-3
STRUCTURAL MEMBERS 1-3
PRINCIPAL AIRFRAME PARTS (ROTARY-WING) 1-6
PRINCIPAL AIRFRAME PARTS (FIXED-WING) 1-6

CHAPTER 2. AIRCRAFT STRUCTURAL METALS

SECTION I. PROPERTIES AND CHARACTERISTICS

PROPERTIES OF METALS 2-1
STRESS AND STRAIN FORCES 2-2

SECTION II. METALS AND METALWORKING PROCESSES

ALLOYING 2-3
HEAT TREATMENT 2-3
HOT WORKING 2-5
COLD WORKING 2-6
STEEL 2-7
ALUMINUM AND ALUMINUM ALLOYS 2-10

DISTRIBUTION RESTRICTION: Approved for public release; distribution is unlimited.

*This publication supersedes FM 1-563, 24 June 1985.

Downloaded from http://www.everyspec.com

MAGNESIUM ALLOYS 2-19
TITANIUM AND TITANIUM ALLOYS 2-22
COPPER AND COPPER ALLOYS 2-26
MONEL 2-26
INCONEL 2-28
HARDNESS TESTING OF METALS 2-28

CHAPTER 3. SHEET METAL TOOLS AND SHOP EQUIPMENT

SECTION I. BASIC HAND TOOLS

LAYOUT AND MEASURING TOOLS 3-1
HOLDING TOOLS 3-10
STRIKING TOOLS 3-13
CUTTING TOOLS 3-14
PUNCHES 3-23
SCREWDRIVERS 3-24

SECTION II. SPECIAL TOOLS AND DEVICES

BENCH PLATES 3-25
STAKES 3-25

SECTION III. SHEET METAL SHOP EQUIPMENT

NONPOWERED METAL-CUTTING MACHINES 3-26
POWERED METAL-CUTTING MACHINES 3-29
DRILLS AND DRILL PRESSES 3-31
GRINDING AND SANDING MACHINES 3-33
METAL-FORMING MACHINES 3-35
SHRINKING-AND-STRETCHING MACHINE 3-41

CHAPTER 4. ENGINEERING DRAWING AND BLUEPRINT READING

TERMS 4-1
LINES 4-1
SCALE 4-5
DRAWING SIZE 4-5
DIMENSIONING 4-5
DRAWINGS 4-8
VIEWS 4-13
BLUEPRINTS 4-15
MICROFILM AND MICROFICHE 4-18

CHAPTER 5. FORMING

SHAPING AIRCRAFT METALS 5-1
MEASUREMENT TERMS 5-3
BENDS OR FOLDS 5-4
PATTERNS OR TEMPLATES 5-10

Downloaded from http://www.everyspec.com

SHRINKING AND STRETCHING ALUMINUM 5-14
STRAIGHT-LINE BENDS 5-14
FORMING BLOCKS 5-14
FLANGED ANGLES 5-18
CURVED FLANGED PARTS 5-19
FORMING BY BUMPING 5-20
JOGGLING 5-25
RELIEVING STRESS 5-28

CHAPTER 6. RIVETS, SPECIAL-PURPOSE FASTENERS, AND RESISTANCE WELDING

SECTION I. SOLID-SHANK RIVETS

TYPES 6-1
IDENTIFICATION 6-1
HEAT-TREATING ICEBOX RIVETS 6-5
SELECTION 6-5
INSTALLATION 6-7

SECTION II. SPECIAL RIVETS

TYPES 6-17
MECHANICALLY EXPANDED RIVETS 6-18
BULBED CHERRYLOCK RIVETS 6-21
WIREDRAW CHERRYLOCK RIVETS 6-31
CHERRYLOCK AND BULBED CHERRYLOCK INSTALLATION 6-31
CHERRYLOCK INSPECTION 6-39
TROUBLESHOOTING (CHERRYLOCK) 6-39
RIVET REMOVAL (CHERRYLOCK) 6-42
TOOL SELECTION (CHERRYLOCK) 6-43
CHERRYMAX RIVETS 6-51
CHERRYMAX TOOLING 6-51
CHERRYMAX INSTALLATION 6-68
CHERRYMAX INSPECTION 6-70
TROUBLESHOOTING (CHERRYMAX) I6-70
RIVET REMOVAL (CHERRYMAX) 6-70
RIVNUTS 6-73
HI-SHEAR RIVETS 6I-75

SECTION III. SPECIAL-PURPOSE FASTENERS

HUCK LOCK BOLTS 6-76
JO-BOLTS 6-84
RESTRICTIONS 6-89
ADVANTAGES 6-93

Downloaded from http://www.everyspec.com

CHAPTER 7. AIRCRAFT FASTENERS

SECTION I. BOLTS

COMPOSITION 7-1
IDENTIFICATION 7-1
GRIP LENGTH 7-2
TYPES 7-2

SECTION II. NUTS

IDENTIFICATION 7-3
CODING 7-4
TYPES AND APPLICATIONS 7-5

SECTION III. WASHERS

PLAIN 7-33
OTHER 7-34

SECTION IV. BOLT AND NUT INSTALLATION

BOLT HOLE SIZE TOLERANCES 7-34
TORQUE APPLICATION 7-35
TYPES AND DESCRIPTION 7-36
IDENTIFICATION 7-38
INSTALLATION 7-39
REMOVAL 7-39
2600- AND 2700-SERIES STUD ASSEMBLIES 7-44

CHAPTER 8. AIRFRAME REPAIR

BASIC PRINCIPLES 8-1
STRUCTURAL REPAIR 8-2
GENERAL REPAIR PRACTICES 8-5
DAMAGE REMOVAL AND FASTENER LAYOUT 8-6
PRIMARY (STRESSED) SKIN REPAIR 8-11
LAYOUT PROCEDURES – SKIN REPAIR 8-12
INTERNAL STRUCTURAL REPAIR 8-23
STRUCTURAL SEALING 8-30
SANDWICH CONSTRUCTION 8-34

CHAPTER 9. AIRCRAFT PLASTICS

CHARACTERISTICS 9-1
TYPES AND IDENTIFICATION 9-1
REPAIR TYPES AND PROCEDURES 9-1
TRANSPARENT PLASTIC PANEL INSTALLATION 9-3
THERMOSETTING PLASTICS (REINFORCED FIBERGLASS) 9-3

Downloaded from http://www.everyspec.com

CHAPTER 10. REBALANCING MOVABLE SURFACES

STATIC BALANCE 10-1
DYNAMIC BALANCE 10-1
TERMS AND SYMBOLS 10-1
SURFACE BALANCING OR REBALANCING PRINCIPLES 10-3
SURFACE REBALANCING PROCEDURES 10-4

GLOSSARY Glossary-1

REFERENCES Reference-1

INDEX Index-1

Downloaded from http://www.everyspec.com

PREFACE

This manual is a training guide and basic reference manual on airframe maintenance and repair for airframe repairers.

It contains general information on structural repair of Army fixed- and rotary-wing. It is not directed to specific aircraft. For information on structural repairs for a specific aircraft type, refer to the applicable aviation unit maintenance (AVUM) and aviation intermediate maintenance (AVIM) technical manuals for that type of aircraft. For a more detailed discussion of maintenance procedures, refer to applicable TM 55-1500-series technical manuals.

The proponent of this publication is HQ TRADOC. Send comments and recommendations on DA Form 2028 (Recommended Changes to Publications and Blank Forms) directly to Assistant Commandant, US Army Aviation Logistics School, ATTN: ATSQ-LTD-L, Fort Eustis, Virginia 23604-5414.

This publication contains copyrighted material.

Downloaded from http://www.everyspec.com

CHAPTER 1

BASIC AIRCRAFT INFORMATION

This chapter contains basic aircraft information for aircraft structural repairers. A general knowledge of aircraft design, aerodynamic forces, aircraft structural units and structural members, and their relationships to each other is essential to understanding basic aircraft structural repair.

Section I. Aerodynamic Forces

Airframe repairers repair, fabricate, and modify aircraft structures. They need to know the names, locations, and purposes of all structural members and parts as well as methods and techniques for repairing them. Repairers should also know basic flight theory and aerodynamic principles and how a repair might affect them. The exterior surfaces of an aircraft, all of which are critical aerodynamically, must be repaired so that air will move over them as smoothly as possible. Repairers must ensure repairs are both structurally sound and aerodynamically smooth.

FOUR FORCES AFFECTING AN AIRCRAFT

Four forces affect an aircraft while it is on the ground, during takeoff and landing, and in flight: weight, thrust, drag, and lift.

Weight

Weight is the force exerted by an aircraft from the pull of gravity. It acts on the aircraft through its center of gravity. The magnitude of this force changes only when the gross weight of the aircraft changes.

Thrust

Thrust is the forward force produced by the engine through the propeller or, in jet engines, by the reaction of the exhaust gases. Thrust is the force that sets an aircraft in motion against the force of drag. Thrust overcomes the inertia of an aircraft to get it moving and the force of drag to keep it moving.

Drag

Inertia is that property of matter which causes an object to remain stationary or to move uniformly in a straight line until it is compelled to change direction by a force acting upon it. If an aircraft is set in motion by the force of thrust, it will continue moving in a straight line until another force is applied to stop it. This stopping force is the resistance of the air itself to an aircraft moving through it. This resistance from the air is the force called drag.

Lift

If weight, thrust, and drag were the only forces acting on an aircraft, it would continue moving down the runway until it ran out of runway or out of fuel. Therefore, a force is needed to overcome the pull of weight and allow the aircraft to leave the ground. This force, which works against the force of weight, is called lift. The wings supply lift to an aircraft.

Airfoil

An airfoil is any surface designed to create a reaction on itself from the air it passes through. Aircraft surfaces, such as propeller blades, wings, stationary and movable control surfaces, and even the fuselage, can all be considered airfoils. However, the term airfoil is usually applied to the wings. Cross sections of wings or airfoils appear in Figures 1-1 through 1-4. The front edge of a wing is called the leading edge; the rear is called the trailing edge. The chord of a wing is the distance from the leading edge to the trailing edge. Chord is represented by a straight line called the chordline. The curve or departure from this straight line taken by the shape of the wing is known as the camber. If the surface is convex (outward-curving), the camber is positive (Figure 1-2). If the surface is concave (inward-curving), the camber is negative (Figure 1-3). The upper surface of an airfoil always has positive camber. The lower surface usually has positive camber, but it can have zero (no curve) camber (Figure 1-4).

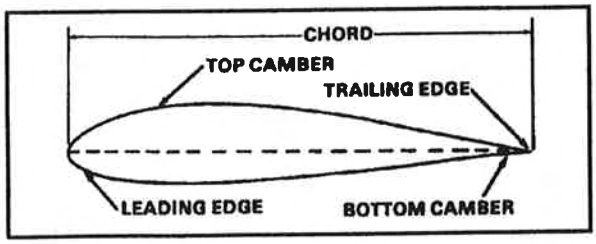

Figure 1-1. Cross section of a wing

Downloaded from http://www.everyspec.com

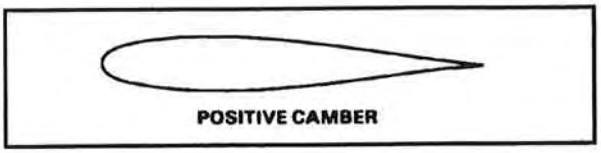

Figure 1-2. Wing with positive camber

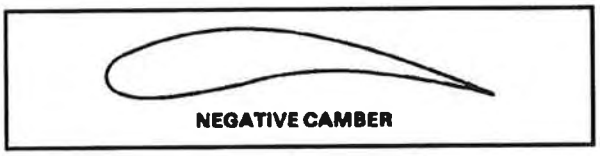

Figure 1-3. Wing with negative camber

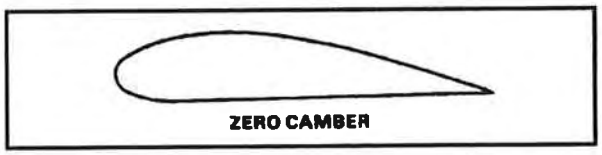

Figure 1-4. Wing with zero camber

Bernoulli's Principle

In the eighteenth century, a Swiss physicist, Bernoulli, discovered as the speed of air moving over a surface increases, pressure on the surface decreases proportionately. This principle applies to the flight of an aircraft in the following manner. As movement starts, the mass of air molecules at the leading edge of the airfoil divides. Because the distance across the upper surface is greater than that across the relatively flat bottom surface, air molecules that pass over the top must travel faster than those moving across the bottom in order to meet at the same time along the trailing edge. The faster airflow over the wing creates a lower pressure above it than below it (Figure 1-5).

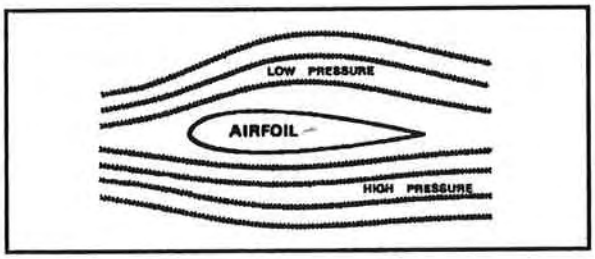

Figure 1-5. Air pressure on airfoil

The greater pressure below the wing tends to push into the lesser pressure above it (lift). Lift will persist as long as air continues to pass over the airfoil. When enough air is moving, the lift will match the weight of the airfoil and all its attached portions and will then support the entire aircraft. As air moves even faster across the wing, lift will exceed weight and the aircraft will rise. Not all the air that an airfoil meets is used in lift. Some of the air creates resistance (drag) and hinders forward motion. Lift and drag, the two forces into which air resistance is converted, depend on the angle of attack, the speed of the airfoil, air density, and the shape of the airfoil or wing.

ANGLE OF ATTACK

The term, angle of attack, represents the acute angle between the chord of an airfoil and the direction of its motion relative to the air (Figure 1-6). Motion relative to air, or relative wind, is the direction of moving air in relation to the wing or airfoil.

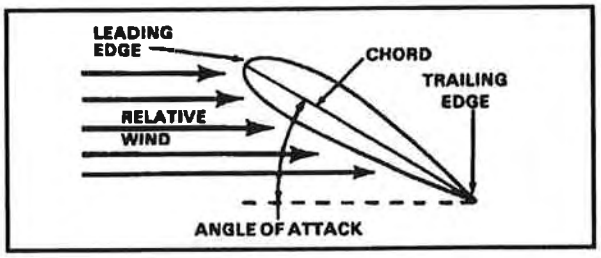

Figure 1-6. Angle of attack.

As the angle of attack increases, lift and drag increase along with it up to a certain point known as the critical angle of attack (Figure 1-7). At this point the wing suddenly loses lift although drag continues to increase. As a result, the aircraft stalls. Stalling is caused by turbulence, which is created by eddies of air (burbling) that break up the pattern of relative wind on the upper surface of the wing.

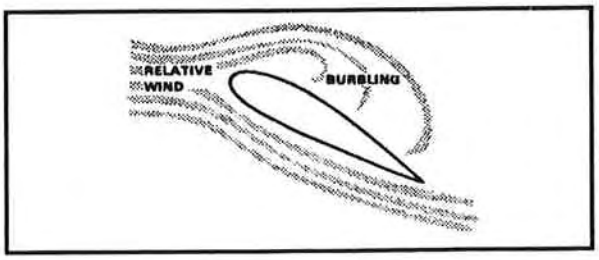

Figure 1-7. Critical angle of attack

When the critical angle is reached, air no longer clings to the top of the wing and turbulence slows the speed of the relative wind and increases pressure above the wing. When pressure above and below the wing becomes equal, the wing loses lift. At this point, the aircraft stalls. Wings and horizontal stabilizers are usually attached with a built-in angle of attack known as the angle of incidence. When the fuselage is level longitudinally, the angle of incidence is measured between the chord of the wing and its horizontal plane.

Downloaded from http://www.everyspec.com

AIRFOIL SPEED

As the speed of the airfoil moving through the air increases, the difference in pressure between the upper and lower relative wind layers also increases. Thus, lift increases as speed increases but not in direct proportion to it.

AIR DENSITY

Air density at 18,000 feet is only about half its density at sea level. Because air becomes thinner as altitude increases, any aircraft flying at high altitude must increase speed to maintain level flight. Aircraft flight is also affected by temperature because air density is reduced as air temperature rises.

AIRFOIL SHAPE

The shape of an airfoil affects lift in many ways. Up to a certain point the greater the camber or curvature, the greater the lift. An airfoil with a smooth surface has more lift in relation to drag than one with a rough surface. A rough surface produces turbulence, which reduces lift and increases drag.

Section II. Main Structural Units

An aircraft is constructed of many parts that are either riveted, bolted, screwed, bonded, or welded together. Because these parts make up the structure of the aircraft, they are called structural members. Many of them can be grouped into several units or assemblies; these combined units are often called the aircraft structure or the airframe. Repair and maintenance of structural members is called airframe maintenance or repair. To deal with the problems of airframe repair intelligently and effectively, airframe repairers must have a clear understanding of the location, construction, and purpose of the aircraft's various structural units.

STRUCTURE

The monocoque type of construction (Figure 1-8) is like a shell in which the skin carries the major stresses and functions as the main part of the airframe. The strength required in construction depends on the power rating, speed, maneuverability, and design of the aircraft. In full-monocoque-type construction, formers, frame assemblies, and bulkheads provide shape, but the skin carries the primary stresses. However, this type is seldom used because of its limited load-carrying capacity. To overcome the strength-versus-weight problem inherent in full monocoque construction, additional classes or modifications were developed—semimonocoque, reinforced-shell construction, box beam, etc. All present-day Army helicopters and airplanes use one or the other of these classes of construction. The semimonocoque type (Figure 1-9) has vertical reinforcements with the skin being reinforced by longitudinal members called stringers. All of these variations have the skin reinforced by a complete framework of structural members (Figure 1-10).

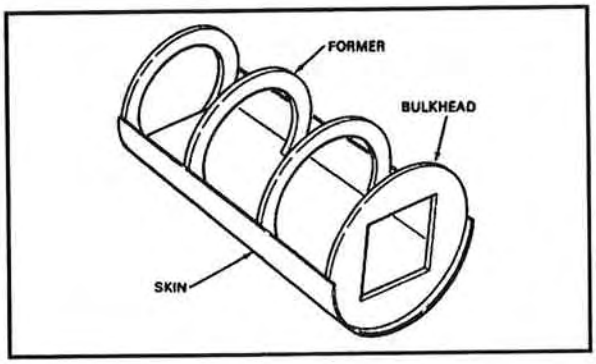

Figure 1-8. Monocoque-type construction

STRUCTURAL MEMBERS

Bulkheads, Frame Assemblies, and Formers

Bulkheads, frame assemblies, and formers (Figure 1-11) serve a dual purpose. They give cross-sectional shape to the fuselage, and they add rigidity and strength to the structure. Their shape and size vary considerably depending on their function and position in the fuselage. Formers are the lightest. They are used primarily for fillings or skin attachments between the larger members. Frame assemblies are the most numerous and important members in the fuselage. When frame assemblies are used to separate one section of the fuselage from another, they are called bulkheads. Heavier than formers, they are equipped with doors or other means of access.

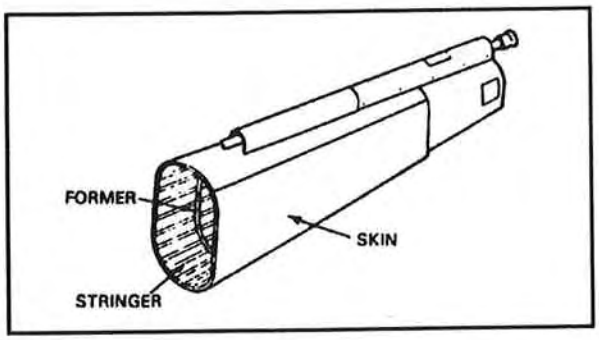

Figure 1-9. Semimonocoque-type construction

Downloaded from http://www.everyspec.com

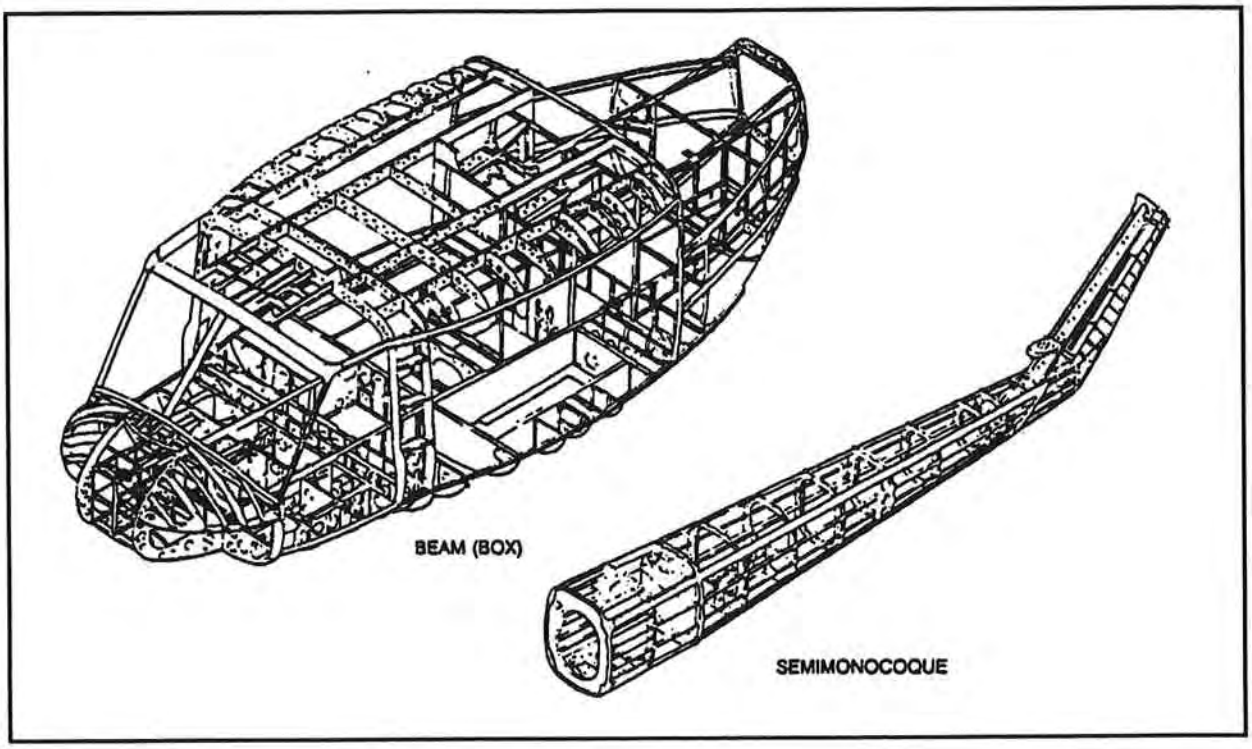

Figure 1-10. Variations of semimonocoque construction

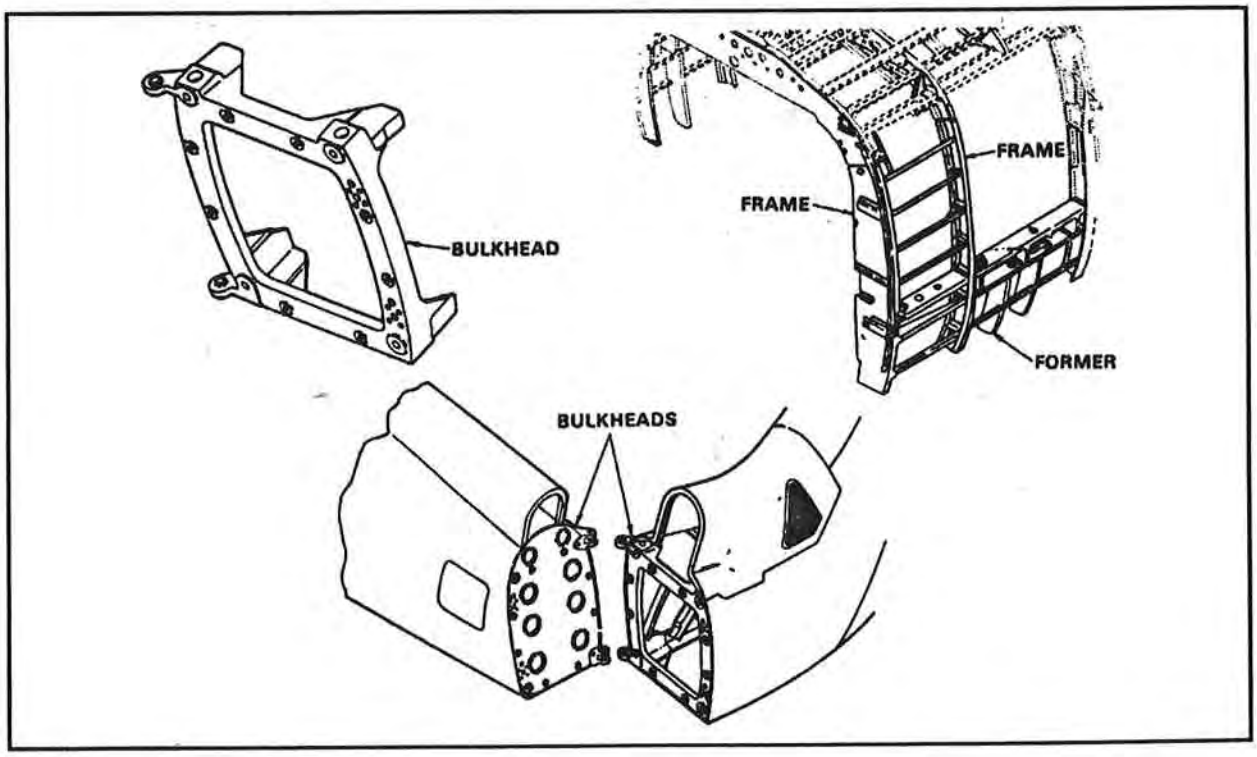

Figure 1-11. Airframe structural members

Downloaded from http://www.everyspec.com

Stringers and Longerons

Stringers and longerons are the main lengthwise members of the fuselage structure. The longeron is fairly heavy. Several longerons usually run the full length of the fuselage. They hold the bulkheads and formers which, in turn, hold the stringers. The stringers are smaller, lighter, and weaker than the longerons. They have some rigidity and are the structural members that "string" or join together the skin and vertical structural members. Longerons, bulkheads, formers, and stringers are all joined together to form a rigid fuselage framework (Figure 1-12).

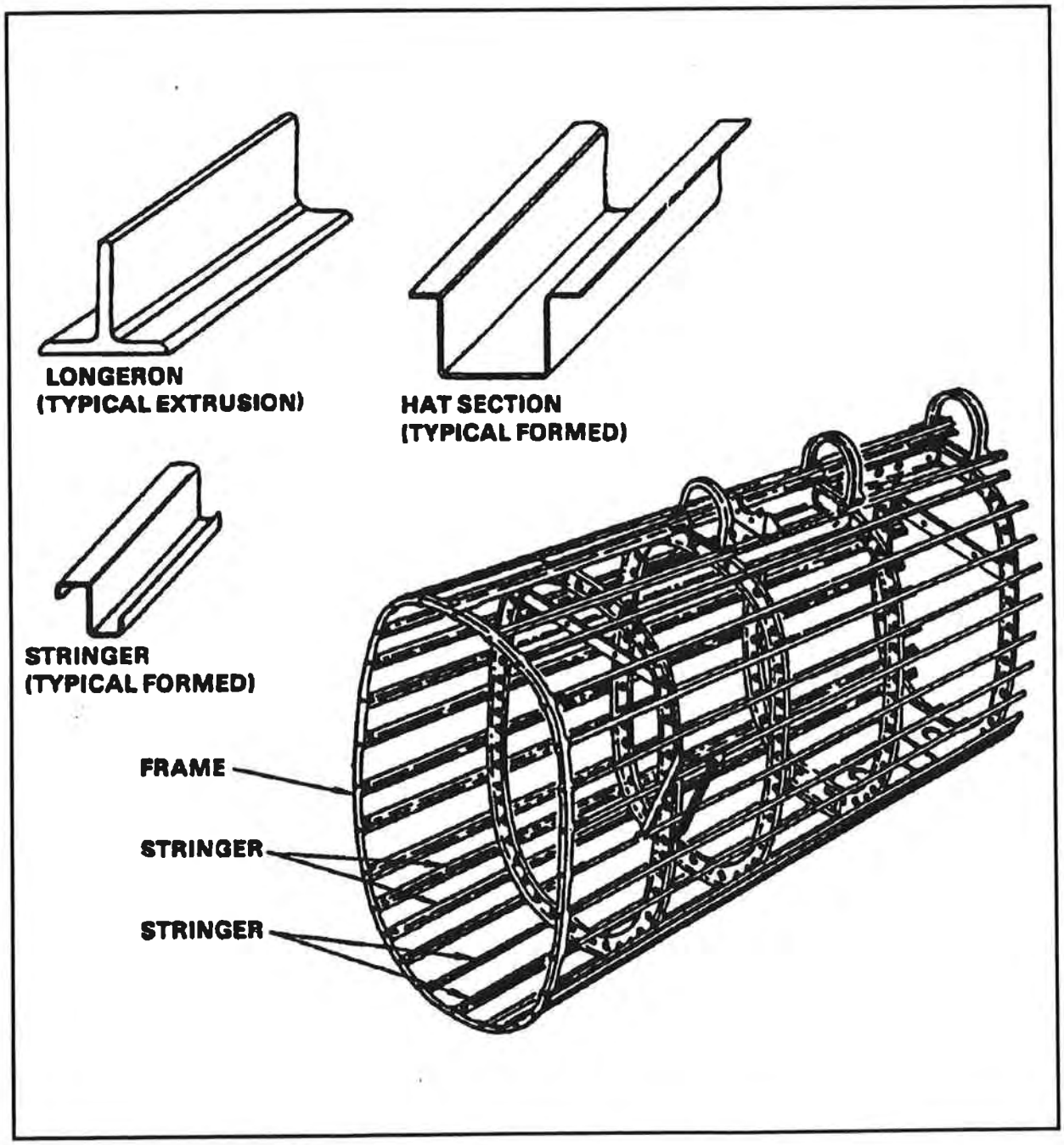

Figure 1-12. Rigid fuselage framework

Downloaded from http://www.everyspec.com

PRINCIPAL AIRFRAME PARTS (ROTARY-WING)

Fuselage

The fuselage of a typical helicopter has two main sections, the cabin and the tail cone or tail boom (Figure 1-13). The cabin section contains passenger or cargo compartments with space for crew, passengers, cargo, fuel, oil tanks, controls, and power plant. Multiengine helicopter are an exception; their power plants are mounted internally or externally in separate engine nacelles (see discussion of nacelles below). The tail cone section and landing gear are attached to the cabin section in such a manner that they can be inspected, removed, repaired, and replaced when necessary. The cabin is strong enough at the points of attachment to withstand the forces involved in flying and landing. Size and construction of cabin compartments vary with different types of helicopters. The tail cone section attaches to the cabin and supports the tail rotor, tail rotor drive shafts, and stabilizer (Figure 1-14).

Main and Tail Rotor Blades

The rotor blades are rotary airfoil surfaces. Main rotor blades provide the lift that the helicopter needs for flight. Tail rotor blades compensate for the torque created by the rotation of the main rotor blades. A typical rotor blade has a leading edge spar, a trailing edge, balance plates, root and tip fairings, and a cuff attachment point. The leading edge spar is the main supporting member. The trailing edge consists of ribs and pockets attached to the leading edge spar with adhesive bonding. Figures 1-15 and 1-16 illustrate typical construction features of main and tail rotor blades.

PRINCIPAL AIRFRAME PARTS (FIXED-WING)

Fuselage

The fuselage is the main structural unit of any airplane. Other structural units are directly or indirectly attached to it (Figure 1-17). The outline and general design of the fuselage are much the same in all types of airplanes. Various designs have been developed that successfully meet the many different requirements for mission performance. The best features of these designs are incorporated in the latest airplanes. Airplanes differ in the size and construction of the different compartments. On single-engine military airplanes, the fuselage houses the power plant, the personnel, and the cargo. On most multiengine airplanes, power plants are housed in compartments called nacelles, which are either built into the wings or suspended in pods from the wings or fuselage. Fuselage design varies with the manufacturer and the requirements of the service for which it is intended. The basic internal structures of airplanes are the same as for helicopters.

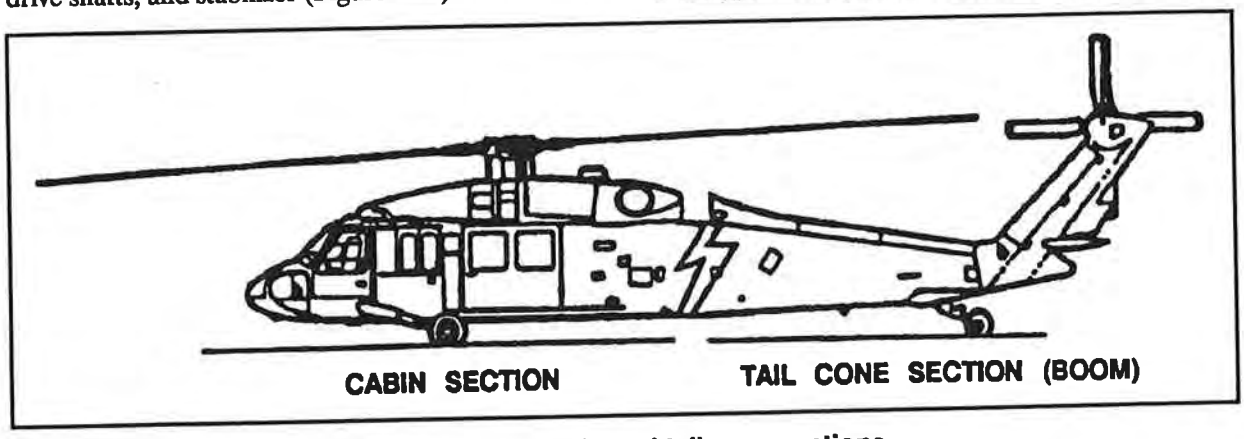

Figure 1-13. Cabin and tail cone sections

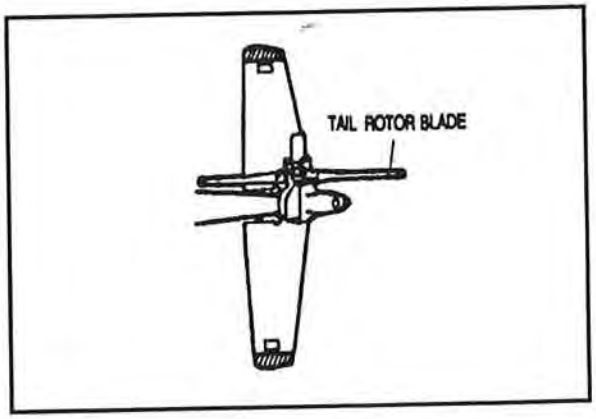

Figure 1-14. Stabilizer

Downloaded from http://www.everyspec.com

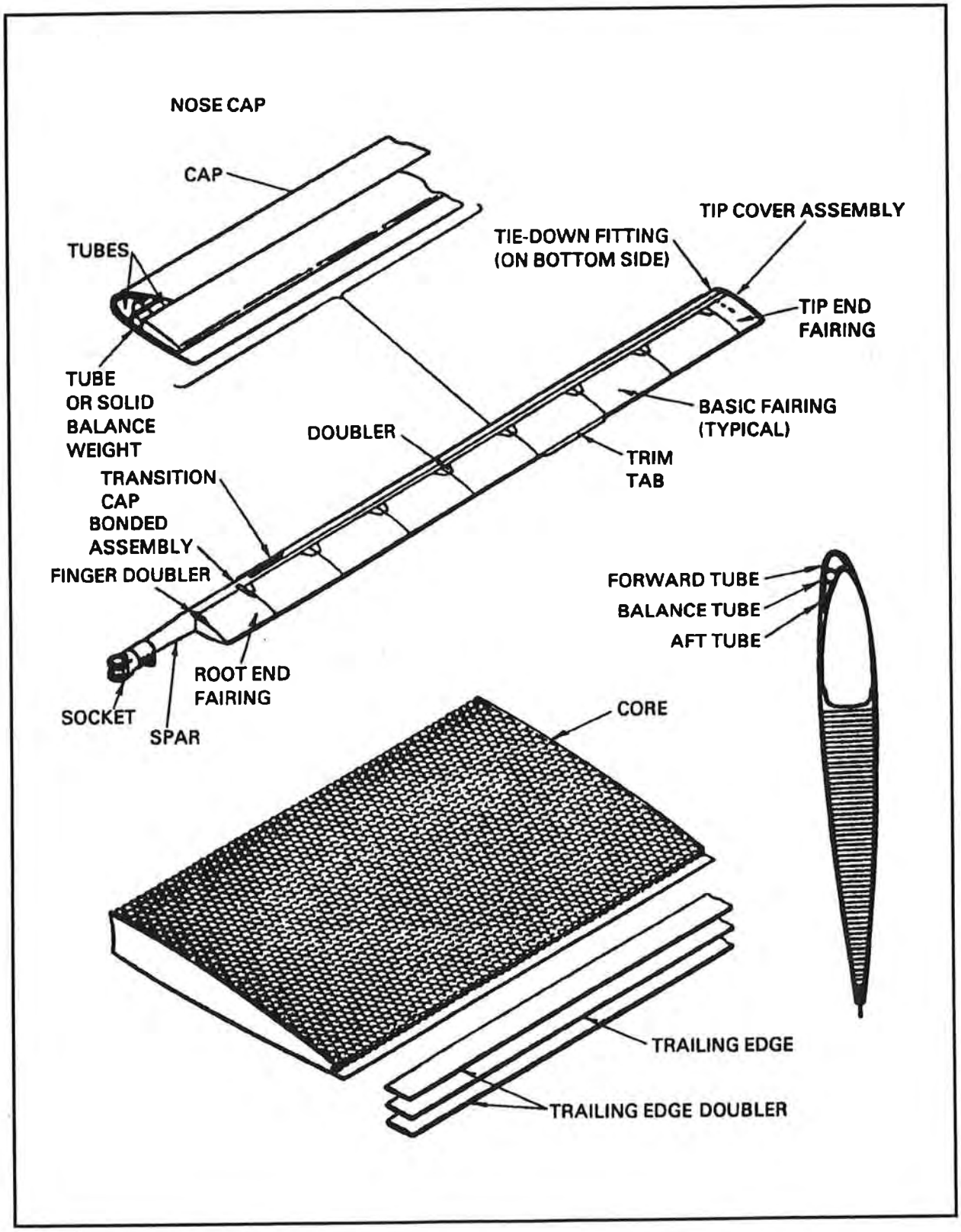

Figure 1-15. Main rotor blade construction (basic) (metal spar)

Downloaded from http://www.everyspec.com

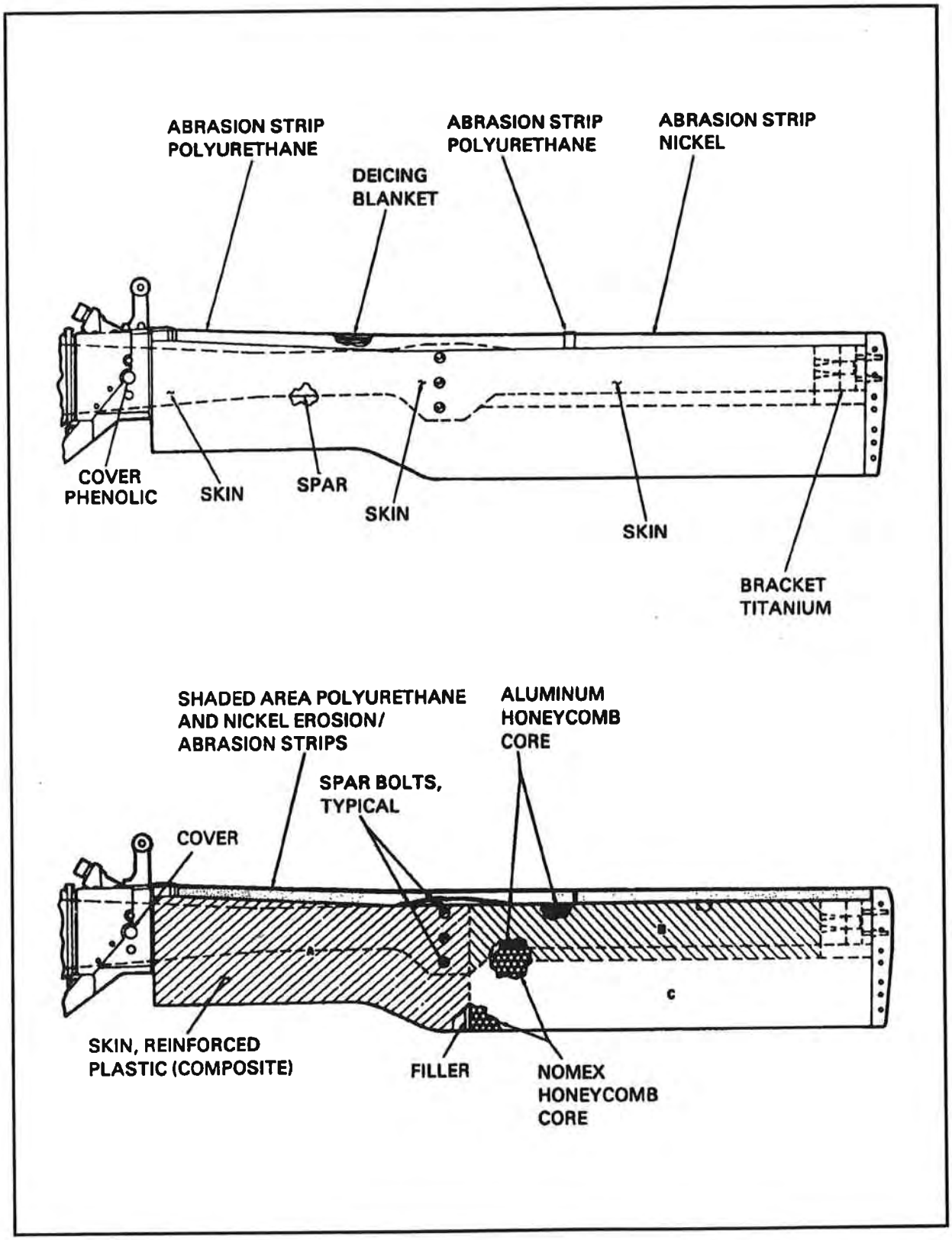

Figure 1-16. Tail rotor blade construction

Downloaded from http://www.everyspec.com

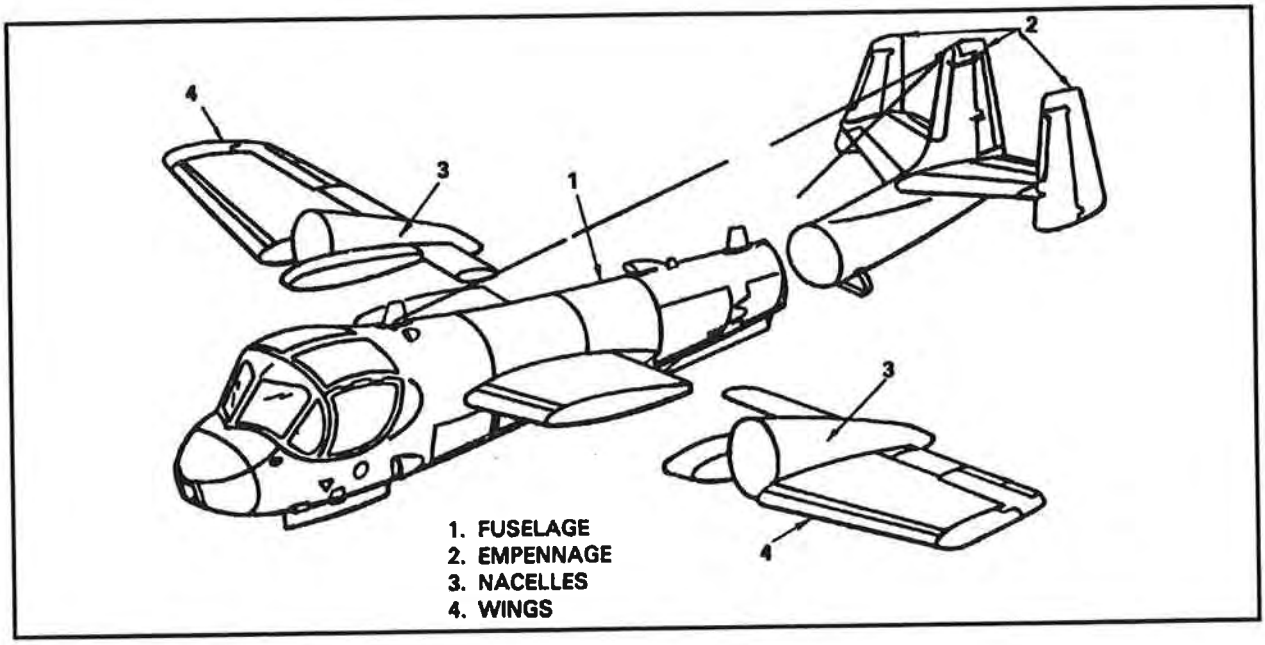

Figure 1-17. Principal airframe parts

Nacelles

Nacelles (Figure 1-18) are enclosed, streamlined structures used on multiengine aircraft primarily to house the engines. Nacelle design, like that of fuselages, depends partly on the manufacturer and partly on intended use. On twin-engine airplanes nacelles also house the main landing gear and related equipment. Fundamentals of nacelle repair are essentially the same as for fuselage repair, regardless of whether the nacelle houses a piston-type reciprocating engine, a jet engine, landing gear, cargo, or personnel. The nacelle's construction, whether of the monocoque or semimonocoque type, must be strong; its weight must be kept to a minimum; and its exterior must be aerodynamically suited to its position on the airplane. As in the fuselage, airframe maintenance on the nacelle involves the skin, formers, bulkheads, rings, and longerons.

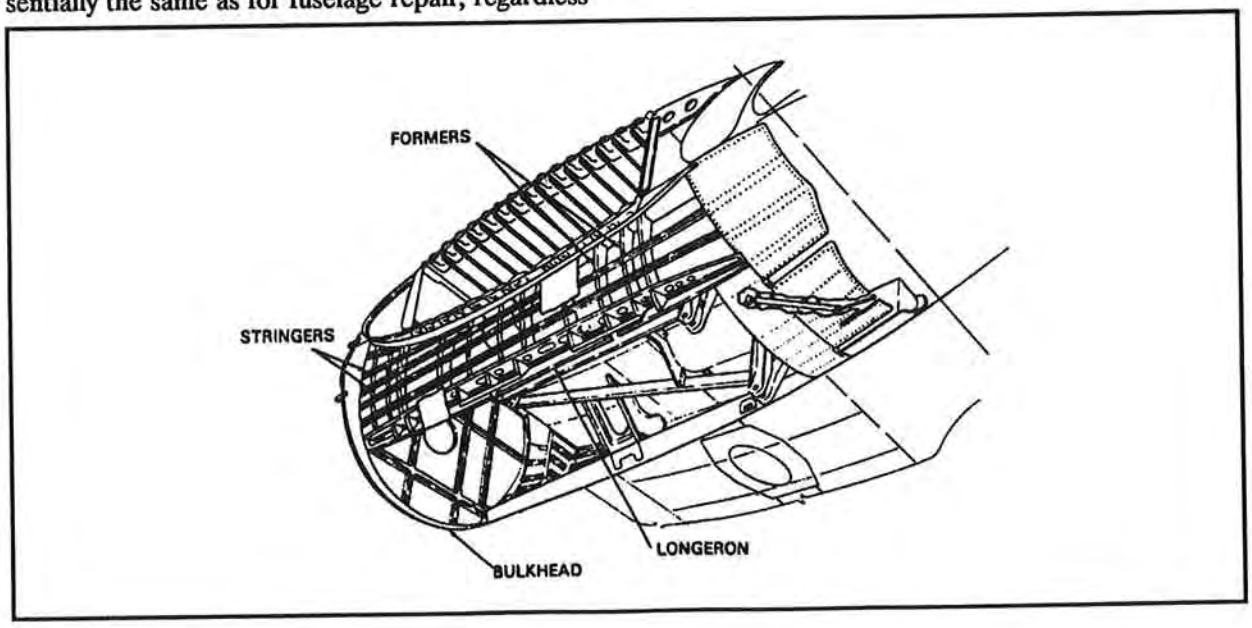

Figure 1-18. Multiengine-type nacelle with cross section

Downloaded from http://www.everyspec.com

Wings

The wings of an airplane are airfoils designed to give lifting force when the airplane moves forward rapidly through the air. The wing design of any airplane depends on a number of factors, such as the plane's size, weight, and intended use, desired in-flight and landing speeds, and rate of climb. The wing tip may be square, rounded, or even pointed. Both leading and trailing edges may be straight or curved, or one edge may be straight and the other curved. Also, one or both edges may be tapered so that the wing is narrower at the tip than at the root where it joins the fuselage. Many types of modern airplanes have swept-back wings. The wings of military airplanes are usually of cantilever construction; that is, they are built so that they need no external bracing. With few exceptions wings of this design are of the stressed-skin type. This means that the skin is part of the wing structure and carries part of the wing stresses.

Types of Wing Design

In general, wing construction is based on one of three fundamental designs – monospar, multispar, and box beam. Various slight modifications of these designs may be adopted by different manufacturers.

Monospar. The monospar wing (Figure 1-19) uses only one main longitudinal member in its construction. Ribs or bulkheads provide the necessary contour or shape to the airfoil. Wings of the strict monospar type are not in common use. However, this type of wing design is often modified by adding false spars or light shear webs along the trailing edge as support for the control surfaces.

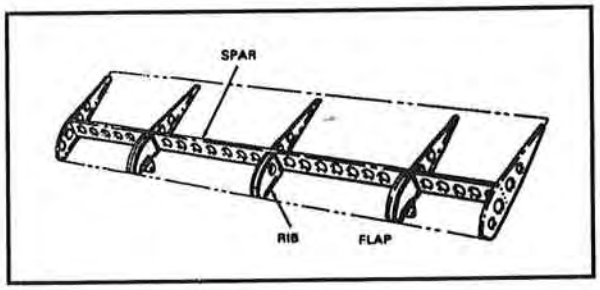

Figure 1-19. Monospar wing

Multispar. The multispar wing (Figure 1-20) uses more than one main longitudinal member in its construction. Ribs or bulkheads are often included to give contour to the wing. This type of construction, or a modification of it, is used in lighter types of airplane.

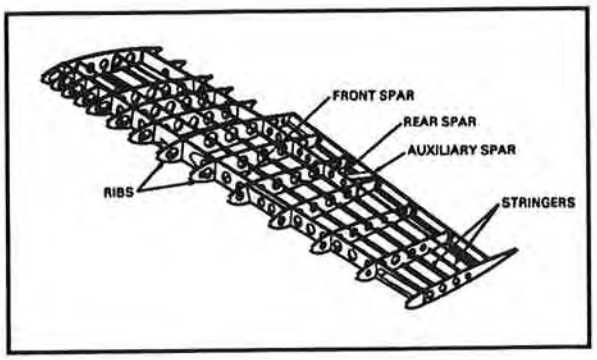

Figure 1-20. Multispar wing

Box beam. The box beam wing (Figure 1-21) uses two main longitudinal members with connecting bulkheads to provide additional strength and give contour to the wing. A corrugated sheet may be placed between the bulkheads and the smooth outer skin to enable the wing to carry tension and compression loads better. In some cases heavy longitudinal stiffeners are substituted for the corrugated sheets, or a combination of corugated sheets on the upper surface of the wing and stiffeners on the lower surface is used.

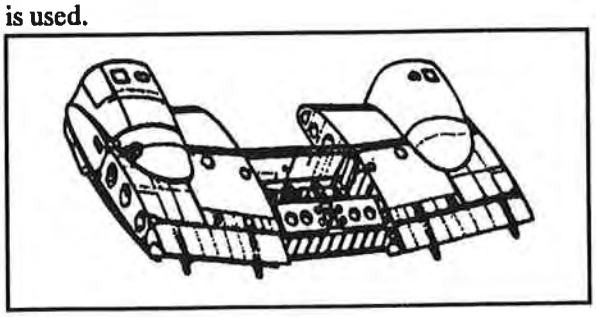

Figure 1-21. Box beam wing

Internal Construction

The main structural components of a wing are the spars, the ribs or bulkheads, and the stringers or stiffeners (Figure 1-22). These structural parts are riveted or bonded together.

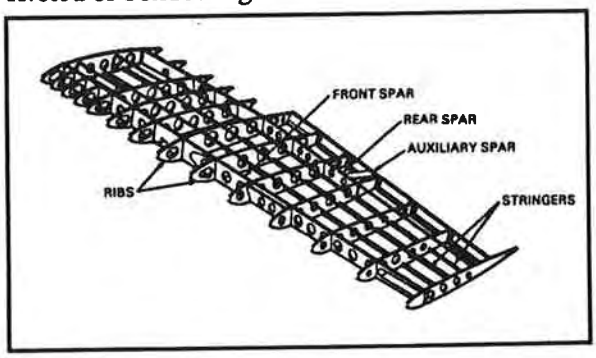

Figure 1-22. Internal wing construction

Downloaded from http://www.everyspec.com

Spars and stiffeners. Spars are the principal structural members of the wing. They correspond to the longerons of the fuselage. Spars run parallel to the lateral axis or toward the wing tip. They are usually attached to the fuselage by wing fittings, plain beams, or part of a truss system. The I-beam type of spar construction consists of a web and cap strips (Figure 1-23). The web is the portion of the I-beam that is between the cap strips. Cap strips are extrusions, formed angles, or milled sections to which the web is attached. They carry the loads caused by the wing's bending and also provide a foundation for attaching the skin. Stiffeners give the spar structure additional strength. They may be either beads pressed into the web or extrusions of formed angles riveted vertically or diagonally to the web.

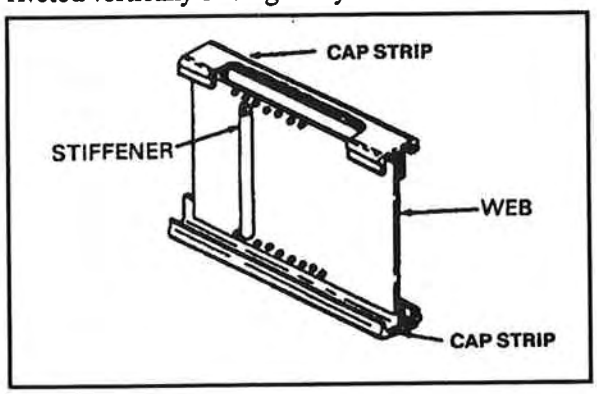

Figure 1-23. Spar design

Ribs. Ribs are the crosspieces that make up the framework of a wing. They run from the leading edge toward the trailing edge (front to rear). Ribs give the wing its contour or shape and transfer the load from the skin to the spars. Ribs are also used in ailerons, elevators, fins, and stabilizers. There are three general types of rib construction: reinforced, truss, and formed (Figure 1-24). Reinforced and truss ribs are relatively heavy compared to formed ribs and are located only at points of greatest stress. Formed ribs are located in many places throughout the wing. The construction of reinforced ribs is similar to that of spars; it consists of upper and lower cap strips joined together by a web plate. The web is reinforced between the cap strips by vertical and diagonal angles. Reinforced ribs are much more widely used than truss ribs. The latter consist of cap strips reinforced only by vertical and diagonal cross members. Formed ribs are made of reformed sheet metal and are very lightweight. The bent portion of a formed rib is known as the flange; the vertical portion is called the web. The web is generally constructed with lightening holes and beads formed between the holes (Figure 1-25). Lightening holes lessen rib weight without decreasing strength. Lightening hole areas are made rigid by flanging the edges of the holes. Beads stiffen the web portion of the rib.

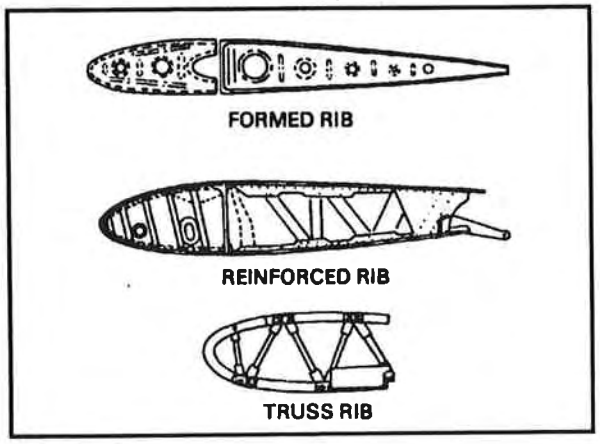

Figure 1-24. Types of ribs

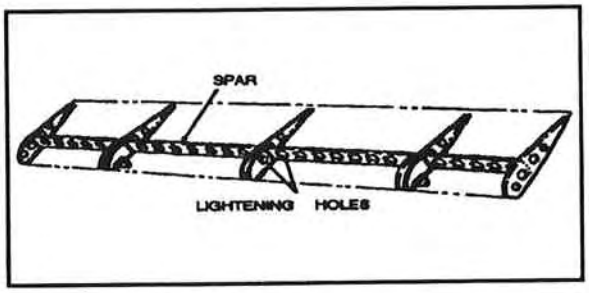

Figure 1-25. Lightening holes

Empennage

The tail section of an airplane is called the empennage (Figures 1-26, 1-27). It includes the aft end of the fuselage or booms, rudders, elevators, stabilizers, and trim tabs. The empennage includes the airplane's stabilizing units, which comprise the vertical and horizontal airfoils located at the rear of the fuselage. The fixed vertical surface is called the vertical stabilizer or fin; the fixed horizontal surface is called the horizontal stabilizer. The vertical stabilizer or fin serves to maintain the airplane's directional stability in flight about its vertical axis. On single-engine, propeller-driven airplanes the vertical fin is sometimes offset in relation to the centerline of the fuselage. This provides directional stability by compensating for the torque or twist caused by the engine propeller. The vertical fin is also the base or anchorage for attaching the rudder. The horizontal stabilizer provides stability about the airplane's lateral axis and also serves as a base or anchorage for attaching the

Downloaded from http://www.everyspec.com

elevators. As with the wings, there are many variations in size, shape, and number of component parts in the empennage and also in its placement in relation to the fuselage. In many respects the empennage has the same construction features as the wings. It is usually all-metal with a cantilever design. Both monospar and multispar construction are common. Ribs give shape to the cross section. Fairing streamlines the angles formed between these surfaces and the fuselage.

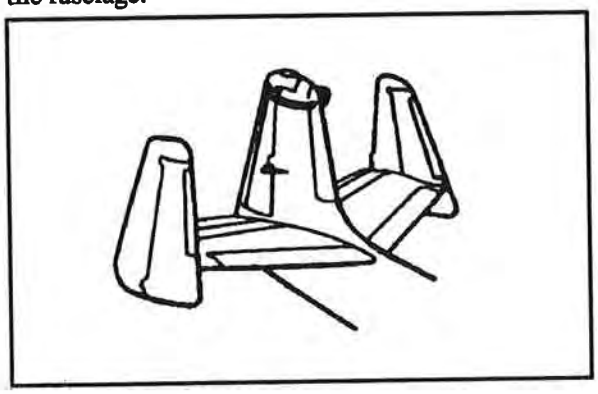

Figure 1-26. Empennage

Flight Control Surfaces

These surfaces may be divided into three groups: primary, secondary, and auxiliary. Primary flight control surfaces are directly attached to the empennage and are movable. Secondary surfaces are hinged on other movable surfaces and are themselves movable. Auxiliary surfaces are attached to nonmovable surfaces of the aircraft. Primary control surfaces include ailerons, elevators, and the rudder. They control the airplane about all three axes: lateral, longitudinal, and vertical. Ailerons are attached to the trailing edge of both the right and left sections of the airplane's two wings. Elevators are attached to the trailing edge of the horizontal stabilizer, and the rudder is attached to the trailing edge of the vertical stabilizer.

Secondary control surfaces include trim tabs and spring tabs. Their purpose is to trim the airplane in flight or reduce the force required to activate the primary control surfaces. Trim tabs and spring tabs are small airfoils recessed into the trailing edges of the primary control surfaces.

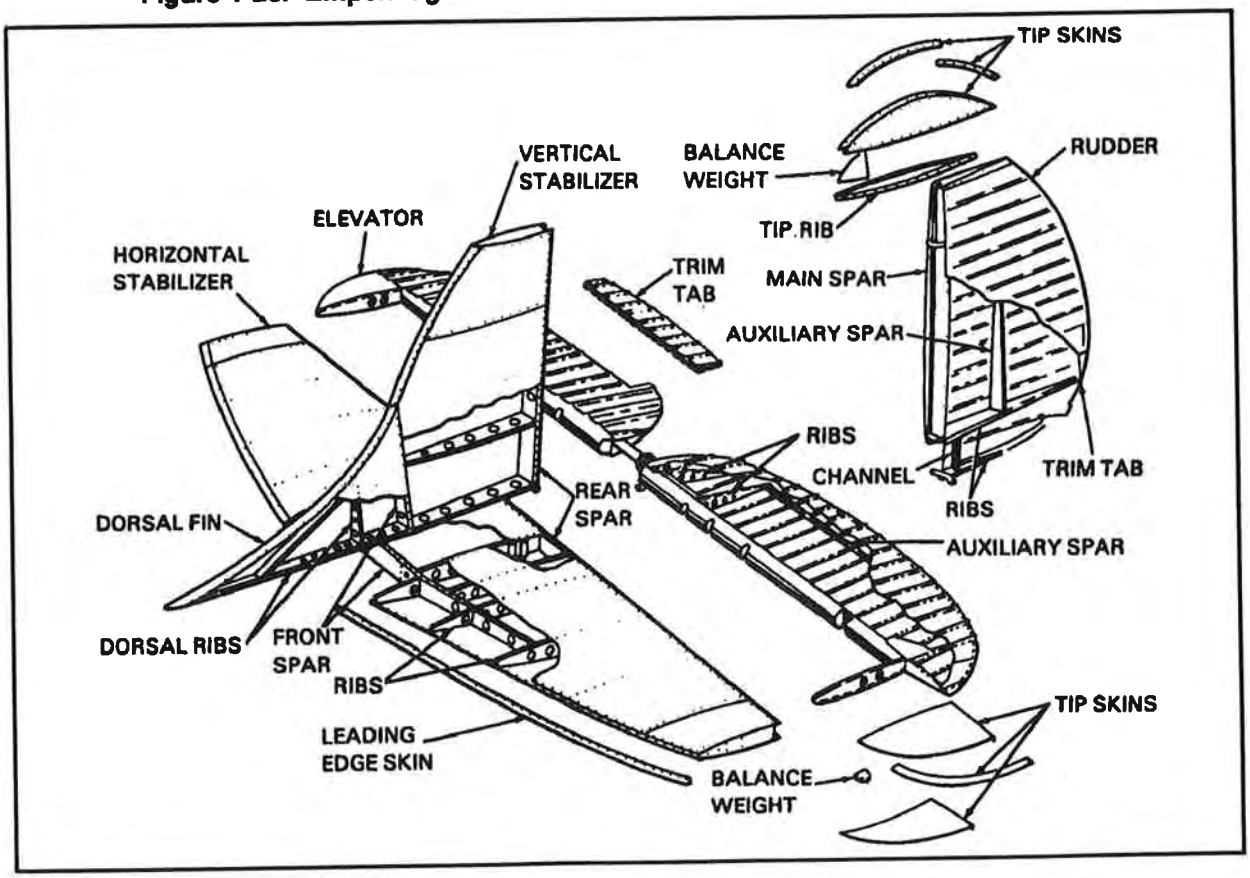

Figure 1-27. Empennage construction

Downloaded from http://www.everyspec.com

Auxiliary control surfaces include wing flaps, speed brakes, slats, and spoilers. Their purpose is to reduce landing speed or shorten the length of the landing roll and change the airplane's speed in flight.

The construction of flight control surfaces is similar to that of the wings. They are usually made of an aluminum alloy. They form a structure built around a single spar member or torque tube. Ribs are fitted to the spar at the leading and trailing edges and are joined together with a metal strip. In most cases the ribs are formed from flat sheet stock. They are not solid but contain punched lightening holes, which saves weight without reducing strength.

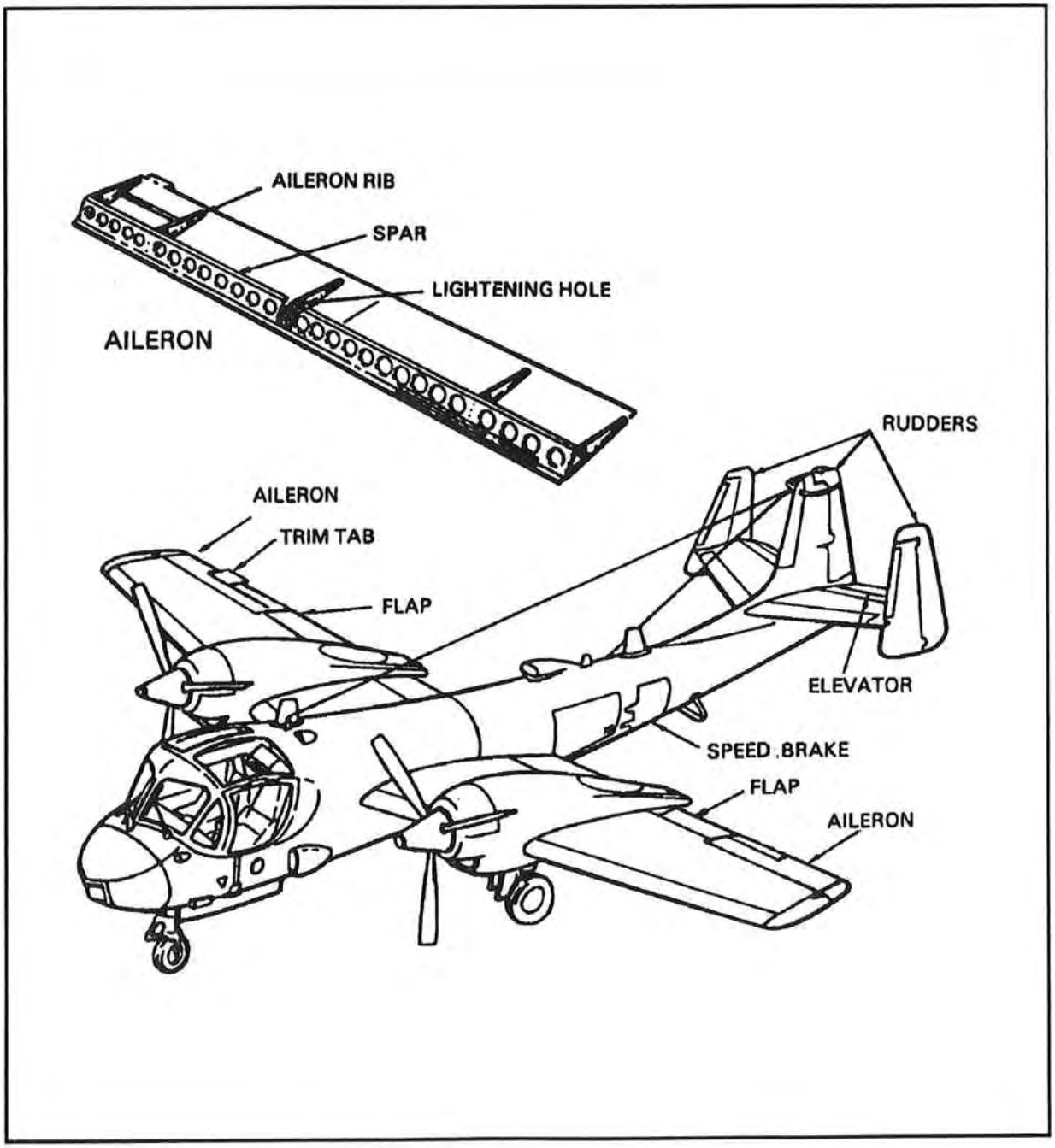

Figure 1-28. Flight control surfaces

Downloaded from http://www.everyspec.com

Downloaded from http://www.everyspec.com

CHAPTER 2

AIRCRAFT STRUCTURAL METALS

Army aircraft are constructed primarily of metal alloys selected for their strength-to-weight ratio. To increase their strength, they are heat-treated and formed to various shapes. To select materials for Army aircraft repairs, airframe repairers must understand the properties and characteristics of metals and alloys and metalworking processes. For additional information on metals, refer to TM 43-0106.

Section I. Properties and Characteristics

PROPERTIES OF METALS

Metallurgists have been working for over 50 years to improve metals used in aircraft construction and repair. Each type of metal or alloy has certain properties and characteristics that make it desirable for a particular use; however, it may have other undesirable qualities. The metallurgist's job is to build up the desirable qualities and tone down the undesirable ones. This is done by alloying (combining) metals and by various heat-treating processes. Airframe repairers need not be metallurgists, but it is to their advantage to have a general knowledge of the properties involved in developing metals and alloys. They should be familiar with certain metallurgical terms used in describing these physical properties and characteristics.

Hardness

This is a metal's ability to resist abrasion, penetration, cutting action, or permanent distortion. Hardness can be increased by working the metal and, for steel and certain aluminum alloys, by heat treatment and cold working. Structural parts are often formed from metals in their soft state. To harden them, they are then heat-treated to retain the finished shape. Hardness and strength are closely associated properties in metals.

Brittleness

This allows metal to tolerate only a little bending or deformation without shattering. A metal that is brittle may break or crack without changing shape. Because structural metals often receive sudden blows, brittleness is not a desirable property. Cast iron or cast aluminum and very hard steel are brittle metals.

Malleability

A malleable metal can be hammered, rolled, or pressed into various shapes without cracking, breaking or other detrimental effects. Sheet metal that is worked into curved shapes, such as cowling, fairings, and wingtips, must be malleable. Copper is an example of a malleable metal.

Ductility

This enables a metal to be permanently drawn, bent, or twisted into various shapes without breaking. Metals used in making wiring and tubing must be ductile. Such metals are preferred for aircraft use because they are easy to form and resist failure when subjected to sudden blows. For these reasons, highly ductile aluminum alloys are used for cowl rings, fuselage, wing skin, and formed or extruded parts, such as ribs, spars, and bulkheads. Chromemolybdenum steel is easily formed into desired shapes.

Elasticity

This enables a metal to return to its original shape when the force causing the shape to change is removed. Elasticity is necessary because it is not desirable for a part to be left permanently distorted after an applied load is removed. Each metal has a point known as the elastic limit beyond which it cannot be loaded without causing permanent distortion. In aircraft construction, members and parts are designed so that the maximum loads to which they might be subjected will never stress them beyond their elastic limits. Spring steel is an elastic metal.

Toughness

A material that has toughness withstands tearing or shearing and can be stretched or otherwise deformed without breaking. Therefore, toughness is desirable in aircraft metals.

Conductivity

This enables a metal to carry heat or electricity. Heat conductivity is important in welding because it governs the amount of heat required for proper fusion. To a certain extent, the metal's conductivity determines the type of jig used to control expansion

Downloaded from http://www.everyspec.com

and contraction. In aircraft, electrical conductivity must also be considered, along with bonding, to eliminate radio interference. Metals vary in their capacity to conduct heat and electricity. For example, copper is a good conductor of both heat and electricity.

Fusibility

This is the ability of a metal to become liquid when heat is applied to it. Metals are fused in welding. Steels fuse at about 2500°F (1371°C), and aluminum alloys fuse at about 1100°F (593°C).

Density

This is the weight of a unit volume of a given material. In aircraft work, the actual weight of a material per cubic inch is used to determine the weight of a part before manufacture. To maintain the proper weight and balance of the aircraft, density should be considered when choosing a material to be used in the design of a part.

Contraction and Expansion

These are reactions produced in metals after heating or cooling. A high degree of heat applied to a metal causes it to expand or become larger. Cooling hot metal shrinks or contracts it. Contraction and expansion affect the design of welding jigs and castings and the tolerances needed for hot-rolled material.

Strength

This is the ability of a metal to hold loads (or forces) without breaking. Strength sums up many of the desirable qualities of metals. Strength with toughness is the most important combination of properties a metal can have. Metals with this combination are used in vital structural members that may become overloaded in use.

STRESS AND STRAIN FORCES

Stress and strain must be included in any discussion of the properties and characteristics of metals. Stress is a force exerted upon a body. It is measured in terms of force per unit area, the force being expressed in pounds and the unit area in square inches; that is, in pounds per square inch. Stress may take the form of compression, tension, torsion, bending, shearing loads, or a combination of two or more of these forces. All parts of an aircraft are subjected to stresses. Strain refers to the condition of a part when it fails to return to its original form after undergoing stress. The various stresses that act on parts of an aircraft while in flight determine the metals that are used in construction and repair.

Compression

This is the squeezing or crushing effect produced on a material by two forces pushing against it and towards each other along the same straight line (Figure 2-1). For example, the landing struts of an aircraft are under compression when landing and, to a lesser extent, when supporting the aircraft's weight as it rests on the ground.

Torsion

This is the action of a material or part when twisting force in one direction is exerted on it from the opposite direction (Figure 2-1). The force that produces torsion is torque.

Tension

This is the pulling apart or stretching effect produced by two forces pulling in opposite directions along the same straight line (Figure 2-1). For example, the cables of a control system are placed under tension when the controls are operated.

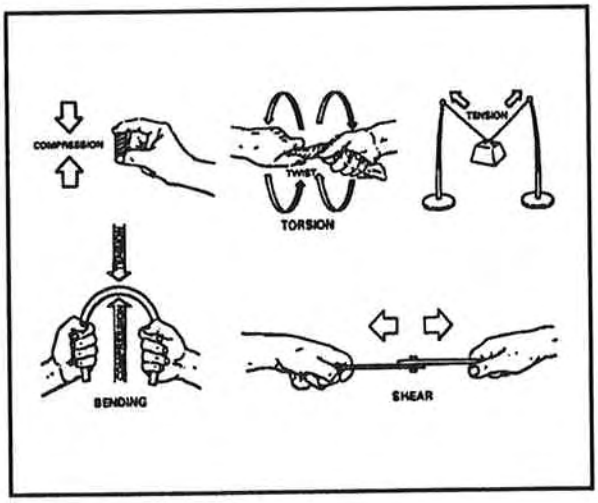

Figure 2-1. Examples of stress and strain

This is a combination of tension and compression. The inside curve of the object being bent is under compression and the outside curve is under tension (Figure 2-1). For example, the main spars of the main rotor blades are subject to bending. The blades droop while the rotor head is at rest and bend upward when rotating.

Downloaded from http://www.everyspec.com

Shear

This is the stress exerted when two pieces of metal fastened together are separated by sliding one over the other in opposite directions (Figure 2-1). The stress cuts off a bolt or a rivet like a pair of shears and tension. Any part being bent is subject to internal shear, as is the skin of sheet metal structures.

Section II. Metals and Metalworking Processes

ALLOYING

An alloy is defined as a metallic substance that contains more than one chemical element. This definition is logically incorrect because no metallic element can be obtained in a condition of absolute purity. Also, if the definition were applied strictly, all nominally pure metal would be classified as alloys. But the definition is acceptable if it is understood that when dealing with nearly pure metals there is no sharp dividing line between an impure metal and an alloy. Most alloys consist essentially of two or more metallic elements. Nonmetallic elements may also be present, notably carbon, nitrogen, oxygen, phosphorus, and sulfur. These are often accidental impurities introduced from the original metal or during production of the alloy. However, in some cases, such as carbon in steel or cast iron, the nonmetallic element is an essential component, which by its presence determines the alloy's properties.

Industrial Alloys

These are classed as either ferrous (iron base) or nonferrous. The ferrous alloys, which have iron as their main component, are the larger group. The most important ferrous alloys are iron and carbon; however, if the carbon content is less than 0.13 percent by weight, they are known as steels. The terms alloy steel and special steel are used to describe steels in which metals other than iron are present in relatively large amounts. One such steel is stainless steel, which contains chromium and nickel. The nonferrous alloys include those with copper, which have been known since the Bronze Age. The brasses are essentially alloys of copper and zinc, with the copper content usually varying between 57 and 70 percent by weight. The bronzes are essentially alloys of copper with 5 to 10 percent tin by weight. The expansion of the aircraft industry has led to the development of light alloys, of which the most important are aluminum and magnesium. The increasing speed of flight has resulted in a wide and growing use of titanium and titanium-base alloys, which have a melting point considerably higher than those of aluminum or magnesium alloys.

Preparing Alloys

The most common way of doing this is by melting together the component metals. If the melting point of the metals differs widely or if one metal is relatively very reactive, it may be convenient to first prepare a master alloy, portions of which are then melted with the remaining metals. Depending on the nature of the alloy, the melting process may be carried out in gas-, coke-, or oil-fired furnaces. Electrical heating by resistance, induction, or arc-melting methods is also used. A few alloys are prepared directly where the metals are extracted from their ores. Thus, pig iron is prepared by reducing iron ore in the blast furnace, and steels are prepared by further purifying the pig iron. Alloys may also be prepared by mixing finely divided powders of the component metals and compacting the mixture under high pressure, followed by removing the impurities.

HEAT TREATMENT

Heat treatment involves the controlled heating and cooling of metals in the solid state. Its purpose is to change a mechanical property or combination of mechanical properties so that the metal will be more useful, serviceable, and safe for a specific purpose. Heat-treating a metal can make it harder, stronger, and more resistant to impact. It can also make a metal softer and more ductile. No single heat-treating operation can produce all of these characteristics; in fact, it often improves some properties at the expense of others. For example, in being hardened a metal may become brittle. The various heat-treating processes are similar in that they all involve the heating and cooling of metals. However, they differ in the temperatures to which the metal is heated, its rate of cooling, and the final result.

Types of Heat Treatment

The most common types of heat treatment for ferrous metals are hardening, tempering, annealing, normalizing, and case hardening. Most nonferrous metals can be annealed, and many can be hardened. With nonferrous metals, the latter process is referred to as heat treatment, not hardening. However, only one nonferrous metal, titanium, can be case-hardened, and none of them can be tempered or normalized.

Downloaded from http://www.everyspec.com

Hardening

For most steels, this consists of heating the steel to the correct temperature and then cooling it rapidly by plunging the hot steel into oil, water, or brine. Although most steels must be cooled rapidly for hardening, a few may be cooled down at room temperature. Hardening increases the hardness and strength of the steel but makes it less ductile. Many nonferrous metals can also be hardened and increased in strength by heating them to the proper temperatures and then cooling them rapidly.

Tempering

After the hardening treatment, steel is often harder than necessary and too brittle for most practical uses. In addition, severe internal stresses are set up during the rapid cooling from the hardening temperature. To relieve internal stresses and reduce brittleness, steel is tempered after being hardened. Tempering consists of heating the steel to a certain temperature (below the temperature at which it was hardened), holding the metal at that temperature for the required length of time, and then cooling it, usually in a draft-free room. The resulting strength, hardness, and ductility depend on the temperature to which the steel is heated during the tempering process.

Annealing

In general, annealing is the opposite of hardening. Metals are annealed to relieve their internal stresses, soften them, make them more ductile, and refine their grain structures. Annealing consists of heating the metal to the proper temperature for the required length of time, and then cooling it back to room temperature. The rate at which the metal is cooled from the annealing temperature varies greatly. To make steel as soft as possible, the metal must be cooled very slowly; for example, by burying the hot part in sand, ashes, or some other substance that does not conduct heat readily or by shutting off the furnace and allowing the furnace and the part to cool together. The former method is called packing; the latter is called furnace cooling.

Normalizing

This treatment applies to ferrous metals only. Normalizing consists of heating the part to the proper temperature, holding it at that temperature until it is uniformly heated, removing it from the furnace, and cooling it at room temperature. Steel parts are normalized to relieve the internal stresses set up by machining, forging, bending, or welding.

Case Hardening

This treatment produces a hard, wear-resistant surface or case over a strong, tough core. The principal forms of case hardening are carburizing, cyaniding, and nitriding.

Principles of Heat Treatment

Internal Structure of Metals

The results of heat treatment depend mainly on the structure of the metal and how it changes when heated and cooled. A pure metal cannot be hardened by heat treatment because its structure changes little when heated. On the other hand, most alloys respond to heat treatment because their structures change with heating and cooling. Alloys are solid solutions, mechanical mixtures, or a combination of both. When an alloy is a solid solution, the elements and compounds that make up the alloy are absorbed, one into the other, in much the same way as salt is dissolved in a glass of water. Their components cannot be identified even under a microscope. When two or more elements or compounds are mixed but can be identified by microscopic examination, a mechanical mixture is formed. A mechanical mixture can be compared to the mixture of sand and gravel in concrete, where the sand and gravel are both visible. Just as the sand and gravel are held together and kept in place by the matrix of cement, so the other components of an alloy are embedded in the matrix formed by the base metal. An alloy that is in the form of a mechanical mixture at ordinary temperatures may change to a solid solution when heated. When cooled back to normal temperature, the alloy may return to its original structure, remain a solid solution, or form a combination of a solid solution and mechanical mixture. An alloy consisting of a combination of a solid solution and mechanical mixture at normal temperatures may change to only a solid solution when heated. When cooled, the alloy may remain a solid solution, return to its original structure, or form a combination solution.

Changes in Steel During Heating and Cooling

The internal structure of a ferrous metal is changed by heating it to a temperature above its critical point, holding it at that temperature long enough for certain

Downloaded from http://www.everyspec.com

internal changes to occur, and then cooling it to air temperature under predetermined and controlled conditions. At ordinary temperatures, the carbon in steel is in the form of particles of iron carbide scattered throughout an iron matrix known as ferrite. The number, size, and distribution of these particles determine the hardness of the steel. At high temperatures, the carbon is dissolved in the iron matrix in the form of a solid solution called austenite and the carbide particles appear only after the steel has been cooled. If cooling is slow, the carbide particles are usually coarse and few. In this condition the steel is soft. If the cooling is rapid, the carbon precipitates as a cloud of very fine carbide particles, and the steel is hard. Heat treatment of steel is based on the fact that carbide particles can be dissolved in austenite. The temperatures at which this transformation takes place are called the critical points. They vary with the composition of the steel. The element that normally has the greatest influence on the desired characteristics is carbon.

HOT WORKING

Almost all steel is hot-worked from the ingot into some form from which it is either hot- or cold-worked to the finished shape. When an ingot is stripped from its mold, its surface is solid but the interior is still molten. The ingot is then placed in a soaking pit that retards loss of heat, and the molten interior gradually solidifies. After soaking, the temperature is equalized throughout, and the ingot is reduced to intermediate size by rolling, which makes it easy to handle. The rolled shape or section is called a bloom when its dimensions are 6 by 6 inches or larger and almost square. The section is called a billet when it is almost square and less than 6 by 6 inches. Rectangular sections that have widths greater than twice their thicknesses are called slabs. The slab is the intermediate shape from which sheets are rolled. There are three basic techniques used in hot working: casting, forging, and extruding.

Casting

Castings are produced by pouring a molten metal or mixture of metals into a mold, where it is allowed to solidify. Castings are made in two types of molds: single-purpose and permanent. The single-purpose molds must be specially prepared, sometimes by machine, from patterns for each casting. Where casting is applicable, there are many advantages to using metal or permanent molds. This eliminates the constantly repeated cost of sand molding. But this advantage may be offset by the high initial cost of the metal mold or die, which is justified only where large numbers of the same casting are required. For many metals, the relatively rapid solidification that takes place in a metal or chill mold offers a definite advantage in structure and strength. For nonferrous metals, chill casting is widely used, especially with some aluminum alloys.

Forging

Sections that cannot be rolled or sections of which only a few are required are usually forged. The forging of steel is a mechanical working above the critical heating point to shape the metal as desired. Forging is done either by pressing or hammering the heated steel to the desired shape.

Pressing

This is used when the parts to be forged are large and heavy. It also replaces hammering where high-grade steel is required. Because a press acts slowly, its force is uniformly transmitted to the center of the section and thus affects the interior grain structure as well as the exterior surface to produce the best possible structure throughout.

Hammering

This can be used only on small pieces. Since the force of hammering is transmitted almost instantly, its effect is limited to a small depth. Thus, to ensure complete working of the section, it is necessary either to use a very heavy hammer or to strike the part with repeated blows. If the force applied is too weak to reach the center, the finished forged surface will be concave. If the center is properly worked, the surface will be convex or bulged. The advantage of hammering is that the operator controls both the amount of pressure applied and the finishing temperature and can produce parts of the highest grade. This type of forging is usually called smith forging. It is used extensively where only a small number of parts are needed. Considerable machining and materials are saved when a part is smith-forged to approximately the finished shape.

Extruding

The extrusion process involves forcing metal through an opening in a die, causing the metal to take the shape of the die opening. Some metals, such as lead, tin, and aluminum, may be extruded cold, but metals

Downloaded from http://www.everyspec.com

are generally heated before the operation begins. The principal advantage of the extrusion process is its flexibility. Because of its workability and other desirable properties, aluminum can be economically extruded to more intricate shapes and larger sizes than is practical with many other metals. Extruded shapes are produced in very simple as well as in extremely complex sections. For example, a cylinder of aluminum is heated to 750° to 850° F (399° to 454°C) and then forced by a hydraulic ram through the opening of a die. Many structural parts, such as stringers, are formed by extrusion.

COLD WORKING

The term cold working applies to mechanical working performed at temperatures below the critical range. It results in a strain hardening of the metal. In fact, the metal becomes so hard that it is difficult to continue the forming process without softening the metal by annealing. Because cold working eliminates the errors attending shrinkage, a much more compact and better metal is obtained. The strength and hardness as well as the elastic limit of the metal are increased, but its ductility is reduced. Because this makes the metal more brittle, it must be heated from time to time during certain operations to remove the undesirable effects of cold working. There are several cold-working processes, but the airframe repairer will be chiefly concerned with cold rolling, cold drawing, and stamping or pressing. These processes give the metals desirable qualities that cannot be obtained by hot working.

Cold Rolling

This term usually refers to the working of metal at room temperature. In this operation, the materials that have been rolled to approximate sizes are first pickled to remove the scale and then passed through chilled finishing rolls. This produces a smooth surface and shapes the pieces to accurate dimensions. The principal forms of cold-rolled stocks are sheets, bars, and rods.

Cold Drawing

This process is used in making seamless tubing, wire, streamlined tie rods, and other forms of stock. Wire is made from hot-rolled rods of various diameters. These rods are pickled in acid to remove scale, dipped in lime water, and then dried in a steam room where they remain until ready for drawing. The lime coating adhering to the metal serves as a lubricant during the drawing operation. The size of the rod used for drawing depends on the diameter desired in the finished wire. To reduce the rod to the desired size, it is drawn cold through a die. One end of the rod is filed or hammered to a point and slipped through the die opening. Here it is gripped by the jaws of the draw and pulled through the die. The series of operations are performed by a mechanism known as a drawbench. To reduce the rod gradually to the desired size, the wire must be drawn through successively smaller dies. Because each of these drawings reduces the ductility of the wire, it must be annealed from time to time before further drawings can be made. If cold working reduces the wire's ductility, it increases its tensile strength enormously. In making seamless steel aircraft tubing, the tubing is cold-drawn through a ring-shaped die with a mandrel or metal bar inside the tubing to support it while the drawing operations are being performed. This forces the metal to flow between the die and the mandrel and provides a way to control the wall thickness and the inside and outside diameters.

Stamping or Pressing

Forming sheet metal parts by forcing the flat metal in molds or dies is called stamping or pressing. These two words have much the same meaning. However, stamping is generally applied to the forming of small objects that can be shaped by one rapid blow of a machine. Pressing is the process that uses a slow, steady stroke or blow to form a large section. The machines used for both these processes include hydraulic, mechanical, and manually operated presses and drop hammers. The stamping or pressing process enables parts to be made faster on a mass production basis. However, due to constant changes in aircraft design, the dies must often be altered or replaced. Steel dies provide long service, but their manufacture involves considerable expense. Therefore, it is desirable wherever possible to avoid using steel dies. Fortunately, most parts that are stamped are made of relatively soft material which permits the use of dies made from materials more easily shaped than steel. One material that has proven successful in the construction of forming dies is laminated hardwood. Such woods as birch and maple can be laminated to make as large a block as desired and can be given a suitable shape with woodworking tools. The female die is concave; the male die is convex and shaped to match the female die exactly, allowing for

Downloaded from http://www.everyspec.com

the thickness of the metal to be formed. Although the blanks from which the dies are made are inexpensive, the actual construction of the die requires superior woodworking skills. Hardwood dies are not normally as successful on drop hammers as they are on presses. The sudden impact of the hammer tends to deform the dies; therefore, lead-zinc dies are used extensively with the drop hammer. Normally, the female zinc die is clamped to the base of the hammer and the male lead die to the drop. This combination has proved very successful. The lead die is soft enough to give slightly under the force of impact, thereby exerting equal pressure on all parts of the material being formed. The lead die will retain its shape for a long time because, at each impact, it is hammered against the hard zinc die, thus reshaping the lead to its original form.

STEEL

Steel is the name given to the various alloys of iron with comparatively small proportions of carbon, silicon, manganese, sulfur, and phosphorus. In addition, special steels usually contain a large proportion of the rare element that gives them their special name, such as chromium steel, tungsten steel, manganese steel, nickel steel, and vanadium steel. Many kinds and grades of steel are used in aircraft construction. Each of these has a characteristic or property that makes it suitable for some particular part. Steels used in aircraft range in tensile strength from 55,000 pounds per square inch to more than four times that strength.

Elements of Steel

Carbon

This is the most important element found in steel. Carbon mixes with iron to form iron carbide, a compound known as cementite. Because of the amount of carbon it contains and its behavior when added to iron, steel can be heat-treated to varying degrees of strength and toughness. The higher the carbon content of a steel, the greater its ultimate strength and hardness and the range through which it can be heated. At the same time, the ductility, malleability, toughness, impact resistance, and weldability of a steel are reduced as its carbon content increases. Therefore, a high-carbon steel is required where great hardness is necessary and where ductility is of secondary importance, while a low-carbon steel is necessary for deep drawing or exceptional strength. In general, low-carbon steels are used for formed fittings and welded parts, and high-carbon steels are used for springs. Steels in the medium-carbon range are used for forged fittings and tie rods, where both strength and ductility are required.

Manganese

Next to carbon in importance as an element in steel production is manganese. The main purpose of manganese is to eliminate the oxides and sulfur from steel in order to produce a clean, tough, hard metal. Adding manganese improves the forging qualities of the steel by reducing its brittleness at forging and rolling temperatures.

Silicon

This nonmetallic element is used in steel making as a hardener and oxidizer (to remove rust). When used in small quantities, silicon improves the ductility of steel.

Sulfur

This is a very undesirable impurity that must be limited to not more than 0.06 percent of total content. The presence of sulfur makes steel brittle at rolling or forging temperatures. Manganese combines with sulfur to form manganese sulfide and thus counteracts the effects of sulfur. When too much sulfur is present, an iron sulfide is formed that, due to its lower melting point, is in liquid form at the forging temperature of steel.

Phosphorus

In low carbon steels, phosphorus raises the yield strength and improves resistance to atmospheric corrosion; but it must be limited to not more than 0.05 percent of the total content. Higher levels of phosphorus cause brittleness when the metal is cold.

Nickel

A white metal that is almost as bright as silver, nickel adds strength and hardness to nickel steels and increases their yield strength. In heat treatment, the presence of nickel in the steel slows down the critical rate of hardening. This, in turn, increases the depth of hardening and produces a finer grain structure. Nickel also reduces the steel's tendency to warp and scale and increases its corrosion resistance. Nickel is one of the chief components of stainless or corrosion-resistant steels.

Downloaded from http://www.everyspec.com

Chromium

This element is a hard, gray metal with a high melting point. Chromium imparts hardness, strength, wear resistance, and corrosion resistance to steel. It also improves the magnetic qualities of steel to such an extent that chromium steel is used for magnets. Chromium is chiefly used in alloys in conjunction with nickel, tungsten, molybdenum, and vanadium. Some chromium alloys are used for parts where greater wear resistance is required. Thus, a chromium-vanadium alloy is used for ball bearings and a tungsten-chromium alloy is used for high-speed cutting tools.

Molybdenum

This element alloys very well with steel to produce a wide variety of molybdenum steels. A small amount of molybdenum has as great an effect as much larger quantities of the other alloying agents. Molybdenum reduces the grain size and increases the elastic limit, impact value, wear resistance, and fatigue strength of steels. The molybdenum steels are readily heat-treated, forged, and machined.

Titanium

Small quantities of titanium are added to stainless steel that is to be used for exhaust stacks, tailpipe shrouds, or other parts where intense heat is encountered. Titanium aids in reducing brittleness caused by high operating temperatures.

Types of Steel

Carbon Steels (Low, High, and Medium)

When the carbon content of steel is between 0.10 and 0.30 percent, it is classed as low-carbon steel. The equivalent Society of Automotive Engineers (SAE) numbers range from 1010 to 1030. (The identification of steel by the SAE numbering system is explained later.) Steels of this grade are used for the manufacture of such articles as safety wire, certain nuts, cable bushings, and threaded rod ends. In sheet form, this steel is used for secondary structural parts and clamps and, in tubular form, for moderately stressed structural parts. Steel that contains carbon in percentages ranging from 0.30 to 0.50 percent is classed as medium-carbon steel. This type of steel is especially suitable for machining and forging and where surface hardness is important. Certain rod ends, light forgings, and parts such as woodruff keys are made from SAE 1035 steel. Steel containing carbon in percentages ranging from 0.50 to 1.05 percent is classed as high-carbon steel. The addition of other elements in varying quantities increases the hardness of this steel. In the fully heat-treated condition, it is very hard and will withstand high shear and wear but little deformation. It has limited use in aircraft construction. In sheet form, SAE 1095 is used for making flat springs and in wire form for making coil springs.

Alloy Steels

Chromium steels. These steels have high hardness, strength, and corrosion-resistant properties. SAE 51335 steel is especially suitable for heat-treated forging, which requires greater toughness and strength than can be obtained in plain carbon steel.

Chrome-molybdenum steels. These steels are formed from small percentages of molybdenum in combination with chromium. They have various uses in aircraft. Molybdenum is a strong alloying element that increases the ultimate strength of steel without affecting is ductility or workability. Molybdenum steels are tough, wear-resistant, and hardened throughout by heat treatment. They are especially suitable for welding and, for this reason, are mainly used for welded structural parts and assemblies. Molybdenum steel has almost replaced carbon steel in the fabrication of fuselage tubing, engine mounts, landing gears, and other structural parts. For example, a heat-treated SAE X4130 tube is about four times stronger than an SAE 1025 tube of the same weight and size. The most widely used series of chrome-molybdenum steel is the one containing 0.25 to 0.55 percent carbon, 0.15 to 0.25 percent molybdenum, and 0.50 to 1.10 percent chromium. When suitably heat-treated, these steels are deep hardening, easily machined, readily welded by gas or electric methods, and especially suitable for high-temperature areas.

Chrome-vanadium steels. These steels are made up of approximately 0.18 percent vanadium and 1 percent chromium. When heat-treated, they have strength, toughness, and resistance to wear and fatigue. A special grade of this type steel in sheet form can be cold-formed into intricate shapes and folded and flattened with no signs of breaking or failure. SAE 6150 is used for making springs; SAE 6195, chrome-vanadium with a high carbon content, is used for ball and roller bearings.

Downloaded from http://www.everyspec.com

Nickel steels. These are produced by combining nickel with carbon steel. The most commonly used of the various nickel steels contain from 3 to 3.75 percent nickel. Nickel increases the hardness, tensile strength, and elastic limit of steel without appreciably decreasing its ductility. It also intensifies the hardening effect of heat treatment. SAE 2330 steel is widely used for aircraft parts, such as bolts, terminals, keys, clevises, and pins.

Nickel-chrome steels. These steels are formed by mixing nickel and chromium in varying proportions with steel. Normally, they contain about two and a half times as much nickel as chromium. The combination of nickel and chrome in these steels produces greater hardness and toughness than either chromium or nickel steels have by themselves. Nickel-chromium steel is used for machined and forged parts requiring strength, ductility, toughness, and shock resistance. These steels include the SAE 3140, 3250, and 3435 types.

Stainless steels. These steels are corrosion-resisting metals. The anticorrosive capacity of this steel is determined by the surface condition of the metal and also by the composition, temperature, and concentration of the corrosive agent. The main component of stainless steel is chromium, to which nickel may or may not be added. Corrosion-resistant steel, such as 18-8, contains 18 percent chromium and 8 percent nickel. Stainless steel, such as Type 321, has chromium, nickel, and titanium, and is nonmagnetic. One of the distinctive features of this steel is that its strength is increased by cold working. Stainless steels can be rolled, drawn, bent, or formed to any number of shapes. These steels are more difficult to weld than mild steels because they expand about 50 percent more and conduct heat only about 40 percent as fast. Some common applications of stainless steel are in fabricating exhaust collectors, stacks and manifolds, structural and machined parts, springs, castings, tie rods, and cables.

Identification

SAE Numbering System

The SAE system for classifying steel is used in specifications for all high-grade steels used in aircraft construction. A numerical index system identifies the composition of SAE steels. Each SAE number consists of a group of digits. The first digit indicates the type of steel; the second indicates the percentage of the principal alloying element; and the last two or three digits usually indicate the percentage, in hundredths of a percent, of carbon in the alloy. Table 2-1 lists the basic SAE numbers for the more common steels. For example, the SAE number 4150 indicates a molybdenum steel containing about 1 percent chromium, 0.15 to 0.25 percent molybdenum, and 0.50 percent carbon. The SAE number 1010 represents a carbon steel that has no principal alloying element but contains 0.10 percent carbon.

> NOTE: The percentages indicated in the SAE numbers are average. For example, the carbon content of SAE 1050 may vary from 0.45 to 0.55 percent.

Types

Steel stock is manufactured in several forms and shapes, including sheets, bars, rods, tubing, and wire. Sheet metal is made in a number of sizes and

Table 2-1. SAE numerals used to identify steel

Type of Steel	Classification (Series)
Carbon	1000
Nickel	2000
Nickel-chromium	3000
Molybdenum	4000
Chromium	5000
Chromium-vanadium	6000
Tungsten	7000
Silicon-manganese	9000

Downloaded from http://www.everyspec.com

thicknesses. Bars and rods are supplied in a variety of shapes, such as round, square, rectangular, hexagonal, and octagonal. Tubing can be obtained in round, oval, rectangular, and streamlined shapes. The size of tubing is generally specified by outside diameter and wall thickness.

NOTE: For more information on steels, refer to TM 43-0106.

Spark Test

This test is commonly used to identify various ferrous metals that have become mixed together in a scrap pile. The pieces of iron or steel are held against a revolving grinding stone, and the metal is identified by the sparks thrown off. Each ferrous metal has its own peculiar spark characteristics. Spark streams vary from a few tiny shafts to a shower of sparks several feet in length. Wrought iron produces long shafts that are straw colored leaving the stone and white at the end. Cast iron sparks are red leaving the stone and turn a straw color in flight. Low-carbon steels give off long, straight shafts with a few white sprigs. As the carbon content of the steel increases, the number of sprigs along each shaft also increases, and the stream becomes whiter in color. Nickel steel causes the spark stream to contain small white blocks of light within the main burst.

ALUMINUM AND ALUMINUM ALLOYS

Uses and Characteristics

Aluminum is found in most clays, soils, and rocks, but the principal commercial source is bauxite ore. Bauxite is largely aluminum oxide mixed with impurities. These impurities are removed by a chemical process, leaving the pure aluminum oxide, alumina. An electrolytic process is used to obtain aluminum from the oxide. Aluminum is one of the most important metals in aircraft construction. It has high strength-to-weight ratio, corrosion resistance, and readily forms into various shapes. Its most desirable characteristic is its light weight, which is only one-third that of steel required to accomplish the same structural purpose. Commercially pure aluminum has a tensile strength of more than 9000 pounds per square inch, but its strength may be almost doubled by rolling or other cold-working processes. By alloying the metal with other metals through heat-treating processes, the tensile strength may be raised as high as 80,000 pounds per square inch or to a point within the strength range of structural steel. The principal elements of aluminum alloys are copper, silicon, magnesium, zinc, nickel, iron, chromium, and manganese. These metals are added singly or in combination to produce the desired characteristics. The total percentage of alloying elements is seldom more than 6 to 10 percent in the wrought alloys. Further changes can be brought about by heat treating. Aluminum and aluminum alloys are available in two basic forms: wrought alloys and cast alloys. Wrought alloys are the more widely used of the two forms in aircraft construction. However, wrought aluminum is always derived from cast aluminum by heating the cast form to a specific temperature and reshaping it by rolling, forging, or extruding while in the heated condition. The extruding process makes it possible to produce many shapes and eliminates much machining, forming, and bending.

Identification

Alloy Designation

Aluminum products are identified by a universally used designation system that has been adopted by the Aluminum Association. Under this arrangement, wrought aluminum alloys are designated by a four-digit index system. The first digit indicates the major alloying element or alloy group, as shown in Table 2-2. Thus, 1xxx indicates aluminum that is 99 percent or more in purity, 2xxx an aluminum alloy in which copper is the major alloying element, 3xxx an aluminum alloy with manganese as the major alloying element, and so on. Although most aluminum alloys contain several alloying elements, only one group (6xxx) designates more than one alloying element. In the 2xxx through 8xxx groups, the second digit indicates alloy modifications. If the second digit in the designation is zero, it indicates the original alloy produced, while numbers 1 through 9, assigned consecutively, indicate alloy modifications. The last two of the four digits have no special significance but serve only to identify the different alloys in the group. These digits are generally the same as those formerly used to designate the same alloy. Thus, 2014 was formerly 14S, 3003 was 3S, and 7075 was 75S. The letter S is used to identify wrought alloys.

Temper Designation

This directly follows the alloy designation and shows the actual condition of the metal. It is always separated from the alloy designation by a dash, as shown in Table 2-3. The letter F following the alloy designation indicates the as-fabricated condition, in

Downloaded from http://www.everyspec.com

Table 2-2. Designation for aluminum alloy groups

Aluminum	99.00 percent minimum and greater	1xxx
Aluminum Alloys grouped by major alloying elements	Copper	2xxx
	Manganese	3xxx
	Silicon	4xxx
	Magnesium	5xxx
	Magnesium and silicon	6xxx
	Zinc	7xxx
	Other element	8xxx

which no effort has been made to control the mechanical properties. The letter O indicates dead soft, or annealed, condition. The letter W indicates solution heat-treated. Solution heat treatment consists of heating the metal to a desired temperature and then quenching it rapidly in cold water. This causes an unstable temper which is applicable only to those alloys that spontaneously age at room temperature. Alloy 7075 may be ordered in the W condition. Some parts are formed in the W state because this avoids the chance of distortion. The letter H indicates strain-hardened; that is, cold-worked, hand-drawn, or rolled. Additional digits are added to the H to indicate the extent of strain hardening. Alloys in this group cannot be strengthened by heat treatment but can be straightened by cold working. The letter T indicates fully heat-treated. Digits are added to the T to indicate certain variations in treatment.

Table 2-3. Temper desination for aluminum alloys

DESIGNATION	CONDITION INDICATED	EXAMPLE
-F	As fabricated	3003-F
-0	Fully annealed	6061-0
-W	Solution heat-treated only	2024-W
-H	Strain-hardened (cold-worked)	
-H1, plus one or more digits	Strain-hardened only and in an unstable condition	1100-H14
-H2, plus one or more digits	Strain-hardened and then partially annealed	3003-H24
-H3, plus one or more digits	Strain-hardened and then partially annealed	3003-H36
-T	Heat-treated	
-T3	Solution heat-treated and then cold-worked	2024-T3
-T4	Solution heat-treated	2024-T4
-T5	Artificially aged only	2017-T5
-T6	Solution heat-treated and then artificially aged	2014-T6
-T8	Solution heat-treated, cold-worked, and then artificially aged	7075-T8
-T9	Solution heat-treated, artificially aged, and then cold-worked	6061-T9
-T10	Artificially aged and then cold-worked	2014-T10

Downloaded from http://www.everyspec.com

Classification of Wrought Aluminum Alloys

These alloys are classified as either heat-treatable or non-heat-treatable. Some aluminum alloys can be hardened by heat treatment, while others can only be hardened by cold working. The latter are known as non-heat-treatable alloys or strain-hardened alloys. Heat-treatable alloys may be hardened by heat treatment, by cold working, or by applying both processes.

Heat-treatable alloys. These alloys provide greater strength and are used in aircraft for structural purposes in preference to non-heat-treatable alloys. Heat-treatable alloys commonly used in aircraft construction are (in order of increasing strength):

- Alloys 5053, 6061, 6062, and 6063 are sometimes used for oxygen and hydraulic lines and in some applications, such as extrusions and sheet metal.
- Alloy 2017 is used for rivets, stressed-skin covering, and other structural members.
- Alloy 2024 is used for airfoil covering, fittings, and rivets. It may be used wherever 2017 is specified because it is stronger.
- Alloy 2014 is used for extrusions and forging. This alloy is similar to 2017 and 2024 in that it contains a high percentage of copper. It is used instead of 2017 or 2024 when more strength is required.
- Alloy 7075 is a newer material that is used where maximum strength is needed. Zinc (instead of copper) is the main alloying element. A small amount of chromium is used for stabilizing.

NOTE: The -T designations below may have one or more digits added to indicate certain variations of the basic heat treatments described.

Non-heat-treatable alloys. These alloys do not respond to any heat treatment except softening and annealing. They can be hardened only be cold working. The non-heat-treatable alloys used in aircraft construction are—

- Alloy 1100—used in nonstructural areas.
- Alloy 3003—similar to 1100 and generally used for the same purposes. It is stronger and harder than 1100 but retains enough workability to make it preferable to 1100 for most applications. Alloy 3003 contains a small percentage of manganese.
- Alloys 5052 and 5056 are used for fuel lines, hydraulic lines, fuel tanks, rivets, honeycomb, and wingtips. Substantially higher strength without too much sacrifice of workability can be obtained with 5052. Therefore, it is preferable to 1100 and 3003 in many applications.

Table 2-4 shows types of aluminum alloys, their commercial designation, and the conditions and types available.

Corrosion Resistance

Aluminum is widely known for its remarkable resistance to corrosion. Some aluminum alloys are more resistant than others. When aluminum is in contact with air, a thin film of aluminum oxide forms on the surface as a protective barrier against corrosion. Often no additional protective coating is necessary, but precautions are taken when the metal is exposed to severe atmospheric conditions or salt water. Interior surfaces are protected with zinc chromate primer. Exterior surfaces are primed and then painted. Where aluminum is in contact with unlike metals, protective coatings are essential because such contact is likely to cause electrolytic action. Standard aluminum alloys that have been coated on both sides with a thin layer of pure aluminum are known as alclad. Alclad has very good corrosion-resisting qualities and is used exclusively for exterior surfaces of aircraft. Alclad sheet is available in all tempers of 2014, 2017, 2024, and 7075. The total thickness of the alcad equals approximately 10 percent of the total aluminum sheet thickness.

Shop Working Practices

Forming

Aluminum is one of the most workable of all common commercial metals. It can be fabricated into a variety of shapes by any conventional method; however, its formability varies with the alloy and temper. In general, aircraft manufacturers form the heat-treatable alloys in the -0 or -T4 condition before they reach their full strength. They are subsequently heat-treated or aged to the maximum strength conditions before being installed in aircraft. This combination of processes achieves the advantage of forming in a soft condition without sacrificing the maximum obtainable strength-to-weight ratio.

Downloaded from http://www.everyspec.com

Table 2-4. Types of aluminum alloys

Sheet and Plate	
COMMERCIAL DESIGNATION	CONDITIONS AND TYPES AVAILABLE
1100	0 (Annealed)
	H12 (1/4-Hard)
	H14 (1/2-Hard)
	H16 (3/4-Hard)
	H18 (Hard)
	H22 (1/4-Hard, partially annealed)
	H24 (1/2-Hard, partially annealed)
	H26 (3/4-Hard, partially annealed)
	H28 (Hard, partially annealed)
	H112 (As rolled)
	F (As fabricated)
3003	Same as 1100
Alclad	0 (Annealed)
2014	T3
	T4
	T42
	T6
	T451
	T651
	F
2024	0
	T3
	T36
	T4
	T42
	T6
	T81
	T86
	T351
	T851
	F
Alclad	0
2024	T3
	T36
	T4
	T42
	T6
	T81
	T86

Downloaded from http://www.everyspec.com

Table 2-4. Types of aluminum alloys (continued)

COMMERCIAL DESIGNATION	CONDITIONS AND TYPES AVAILABLE
	T351
	F
5052	Same as 1100
6061	0
	T4
	T6
	T451
	T651
	F
7075	0
	T6
	T651
	F
Alclad	0
7075	T6
	T651
	F
Seamless Tubing, Round, Square, Rectangular, and Other Shapes	
1100	0 (Annealed)
	H12 (1/4-Hard)
	H14 (1/2-Hard)
	H16 (3/4-Hard)
	H18 (Hard)
	F (As fabricated)
2024	0
	T3
	T4
3003	0
	H12 (1/4-Hard)
	H14 (1/2-Hard)
	H16 (3/4-Hard)
	H18 (Hard)
5052	0 (Annealed)
	H32 (1/4-Hard)
	H34 (1/2-Hard)
	H36 (3/4-Hard)
	H38 (Hard)
	F (As fabricated)

Downloaded from http://www.everyspec.com

Table 2-4. Types of aluminum alloys (continued)

Bars, Rods, and Shapes		
COMMERCIAL DESIGNATION	TYPE	CONDITIONS AND TYPES AVAILABLE
6061 and 6062	0	
	T4	
	T6	
6061 and 6062 (Hydraulic Quality)	T4	
	T6	
1100	Rolled, drawn, or cold-finished	0 (Annealed)
		H12 (1/4-Hard)
		H14 (1/2-Hard)
		H16 (3/4-Hard)
		H18 (Hard)
		H112 (As fabricated)
3003	Extruded	0 (Annealed)
		H112 (As extruded)
		H (As fabricated)
3003	Rolled, drawn, or cold-finished	0 (Annealed)
		H12 (1/4-Hard)
		H14 (1/2-Hard)
		H16 (3/4-Hard)
		H18 (Hard)
		F (As fabricated)
2001	Free machining	T3
		T8
2014	Extruded	0
		T4
		T42
		T4510
		T4511
		T62
		T6510
		T6511
2014	Rolled, drawn, or cold-finished	0
		T4
		T451
		T6
		T651
2017	Rolled or drawn	0
		T4
		T451
2024	Extruded	0

Downloaded from http://www.everyspec.com

Table 2-4. Types of aluminum alloys (continued)

COMMERCIAL DESIGNATION	TYPE	CONDITIONS AND TYPES AVAILABLE
		T351
		T4
		T42
		T8510
		T8511
		T81
2024	Rolled, drawn, or cold-finished	0
		T351
		T4
		T6
		T851
5052	Rolled, drawn, or cold-finished	0
		H32 (1/4-Hard)
		H34 (1/2-Hard)
		H36 (3/4-Hard)
		H38 (Hard)
		F
6061 and 6062	Extruded	0
		T4
		T6
6061	Rolled, drawn, or cold-finished	0
		T4
		T451
		T6
		T651
		T6511
7075	Extruded	0
		T6
		T6510
7075	Rolled, drawn or cold-finished	0
		T6

Annealing

When aluminum is worked repeatedly, it becomes strain-hardened. To remove this hardness, the metal must be annealed. The usual method for removing strain hardening due to cold working is to heat the metal to 650°F (343°C) and allow it to cool slowly in noncirculating air. To remove the effect of heat treatment, slightly higher temperatures are necessary.

Welding

Aluminum is one of the most readily weldable of all metals; however, heat-treatable aluminum alloys used in aircraft structures are not welded. Refer to TM 43-0106 for more information on welding.

Riveting

Riveting is the most reliable method for joining stress-carrying parts of heat-treated aluminum alloy structures.

Heat-Treatment Methods

The most widely used heat-treatable alloys are the wrought alloys: Alclad 2017, 2024, Alclad 2024, 2025, 6053, 6061, 7075, and Alclad 7075. Cast and forging

Downloaded from http://www.everyspec.com

alloys can also be heat-treated. Wrought aluminum alloys always respond more to heat treatment than do cast or forging alloys. The non-heat-treatable alloys commonly used are 1100, 3033, 5052, and 5056. For these alloys, the harder tempers are produced by cold working. Aluminum alloys may be given either a solution heat treatment or a precipitation heat treatment. Certain alloys develop their full strength from the solution heat treatment alone, while others require both types of treatment to develop the desired physical properties.

Solution Heat Treatment

In this treatment, aluminum alloys are heated to the highest temperature that can be used without danger of melting the metals. In order for the metal to read the proper temperature, it should be placed in the oven prior to the oven being turned on. They are held at that temperature long enough to produce the solid solution of the hardening components in the alloy. The term solution here refers to a solid that is evenly dispersed or mixed in another solid. After the holding period (soaking), the alloys are rapidly quenched to retain the solid solution produced. Aluminum alloys 2017 and 2024 develop their full properties when this treatment is followed by aging at room temperature for about 4 days. Age hardening, which is completed in 4 days in 2017 and 2024 materials at ordinary room temperatures, is 90 to 98 percent complete after 24 hours. These alloys should be formed or otherwise worked within 1 hour after the solution heat treatment. This allows the material to be worked easily without danger of cracking. The aging of 2017 and 2024 alloys can be retarded if the material is kept below a temperature of 32°F (0°C). Clad sheet can be heat-treated in salt baths and air chamber furnaces. The molten salt bath brings the metal to the proper temperature in a shorter time than does the air furnace. Various alloys have specific heat-treatment ranges that allow the maximum improvement in mechanical properties. The temperatures in Table 2-5 give satisfactory results in the heat treatment of wrought aluminum alloy products.

Table 2-6 gives the length of time that the alloy should be kept at the correct soaking temperature range after all parts of the metal have reached that temperature.

When a charge (clad alloy) includes parts of various thicknesses, whether in an assembly, in separate pieces, or as overlapping members, the soaking period is determined by the maximum thickness of the load. For this reason, charges of clad alloys involving different thicknesses of material should be avoided as much as possible to prevent diffusion of the alloy through the clad coating of the thinner parts (499° C). After the charge has been soaked for the proper length of time and at the proper temperature, it should be quenched by immersion in water or oil or exposure to air. The sheet, strip, and other thin-sectioned products of the quenching tank must contain enough water so that the average rise in

Table 2-5. Heat-treating (soaking) temperature range for aluminum alloys

Wrought alloys (except forgings)	Temperature (°F)		Temperature (°C)	
	From	To	From	To
2014, 2017, 2117	930	950	499	510
2024, Alclad 2024	910	930	488	499
6063, 6061	960	980	516	527
7075, Alclad 7075 (Sheet)	860	930	460	499
7075 (Extruded shapes)	860	880	460	471

Downloaded from http://www.everyspec.com

Table 2-6. Soaking time for solution heat treatment of wrought aluminum alloys (except forgings)

Alloy	Time required for given thickness[a] (minutes)			
	0.032 in or less	Over 0.032 to 0.125 in	Over 0.125 to 0.250 in	Over 0.250 in
2014			30	60
2117	20	20	30	60
2017	20	20	30	60
2024	30	30	40	60
Alclad 2024[b]	20	30	40	60
6053	20	30	40	60
6061	20	30	40	60
7075	25	30	40	60
Alclad 7075[b]	20	30	40	60

[a]Measured from the time when the load reaches the minimum heat-treating temperature.
[b]Clad aluminum will be held at the correct soaking temperature for a time not to exceed the minimum that is compatible with nonclad aluminum to prevent the loss of cladding.

temperature of the water after quenching a normal load does not exceed 20°F (11°C).

Greater temperature rises are permitted for heavily sectioned products, but the rise must always be kept to the minimum that is practical for the particular product. Wrought alloy parts (except forgings) in 2017, 2117, 2024, and 707 must be quenched by total immersion in water at a temperature not higher than 85°F (30°C) before the charge enters the water. For 2017, 2024, and 7075 material, a rapid quenching is needed to give the resulting product maximum resistance to corrosion. If the material is quenched too slowly, its resistance to corrosion is reduced. For clad 2024 and 7075 material, a rapid quenching is needed to develop maximum resistance to corrosion attack. However, even when it is air-blast-quenched, a solution-heat-treated clad sheet generally loses fewer of its properties when exposed to corrosive conditions than does an uncoated sheet that has been cold-water-quenched.

The method of quenching any individual part should produce the most uniform cooling possible. Usually, distortion of heat-treated parts results from uneven cooling during quenching. This distortion may vary with the position in which a part enters the quenching bath. Tests on hat-shaped sections that were quenched flanges-down, flanges-up, and vertically have shown that distortion can vary from an angular twist of 45° for the flange-down position to no angular distortion at all for the vertical position.

Precipitation Heat Treatment (Artificial Aging)

This heat treatment is used to artificially age material that has previously been solution-heat-treated. Certain aluminum alloys require this treatment to produce the fully heat-treated condition, including the complete development of their mechanical properties. In precipitation heat treatment, the alloys are soaked at specified temperatures well below the annealing temperatures for the length of time required to develop the desired properties. The aging times and temperatures are shown in Table 2-7. During the treatment, a portion of the hardening components in the solid solution precipitates or drops out of the solution and forms particles that are distributed throughout the alloy. These particles, although submicroscopic, effectively increase the alloy's strength. This precipitation results in an increase in yield and tensile strength and a decrease in the elongation of the alloys.

Heat-Treating Procedures

Solution heat treatment involves the following steps and procedures. For precipitation heat treatment, these steps and procedures must be done before the heat treatment (artificial aging) can be accomplished:

Downloaded from http://www.everyspec.com

Table 2-7. Ageing time and temperatures for aluminum alloys

Wrought alloy[a]	Aging time (hr)	Aging temperature (°F)		Aging temperature (°C)	
		From	To	From	To
2017, 2117, 2024	96	b	b	b	b
Alclad 2024	8	345	355	174	179
2014	5	355	365	179	185
6053 and 6061	12 to 20	315	325	157	163
7075[c]	6 to 10	345	355	174	179
Alclad 7075	24	245	255	118	124

[a]Except forgings.
[b]Room temperature.
[c]Unless the aging treatment is begun within 2 hours after quenching, the material should be allowed to age-harden at room temperature for not less than 2 days before it is subjected to the aging treatment.

- Determine the type of alloy being heat-treated. Consult Table 2-3. If the metal is alclad, use the lower temperature and set the oven or furnace to that temperature. Before turning the oven on, open the door and check to make sure there is no trash or metal inside. Place the part in the oven. Then close the door and turn on the oven. Allow the oven to reach the set temperature. This may vary depending on the size, type, and power rating of the oven.
- Soak the metal. Consult Table 2-6 to determine how long to leave the metal in the oven. This is the soaking time. If the metal is clad, make sure the soaking time is not exceeded.
- Quench the aluminum in clear water. The water should be room temperature or less. Not more than 10 seconds should pass between opening the furnace door and immersing the metal in the water. Improper quenching will result in intergranular corrosion or a severe loss of corrosion resistance.

NOTE: Place the part in the quenching solution edgewise or in a manner that minimizes any tendency to float.

- Allow alloys to age. Some alloys are aged at room temperature; others require artificial aging to get the maximum strength. Alloy 2024 may be aged at room temperature for 96 hours before the part may be used. This will give the part a temper designation of T4. Alloy 2024 may also be aged in the furnace artificially.(Artificial aging should be restricted to clad sheets.) Artificial aging will give a different temper and increase strength in the metal. At the end of the artificial aging process the part will have a temper designation of T6. The alloy 7075 must be artificially aged. Consult Table 2-7 for the correct time and temperature for aging. The aging of 7075 will have a designation of T6.

Refer to TM 43-0106 for additional information on aging.

MAGNESIUM ALLOYS

Description, Uses, and Characteristics

Magnesium is the world's lightest structural metal. Aluminum is 1.5 times heavier, titanium 2.5 times heavier, steel 4 times heavier, and copper and nickel alloys 5 times heavier. Magnesium is probably more widely distributed in nature than any other metal. It can be obtained from ores, such as dolomite and magnesite, from underground brines and waste liquors of potash manufacture, and from sea water. Magnesium is combined with small amounts of

Downloaded from http://www.everyspec.com

certain other metals, including aluminum, manganese, zinc, zirconium, thorium, and others, to obtain the strong, lightweight alloys needed for structural purposes. The thorium-containing alloys are suitable for use at temperatures above 700°F (371°C). Table 2-8 lists the magnesium alloys commonly used in aircraft construction and indicates the forms in which they are supplied. It shows how magnesium alloys are used in both the cast and wrought forms. Cast alloys are used in making landing wheels, engine sections, accessory housings, sumps, and small airframe castings. Wrought alloys are used as extrusions, sheet, and plate.

Identification

Magnesium alloys are identified by a standard system of alloy designation adopted by the American Society for Testing Metals (ASTM). The magnesium alloy AZ92A-T4 is an example of how this system works. The first part of the designation (AZ) signifies that aluminum and zinc are the two principal alloying elements. The second part (92) indicates that these elements are present in rounded-off percentages of 9 and 2 percent. The third part (A) indicates that this is the first alloy standardized, with 9 percent aluminum and 2 percent zinc as the principal alloys. The fourth part (-T4) indicates that the alloy is in the solution-heat-treated condition. Table 2-9 gives a complete breakdown of the ASTM designation system.

If identification markings are not on the material, use a spot test to distinguish magnesium from aluminum. Clean the unknown alloy with a file, removing all paint or other surface coating to expose base metal. Place one drop of a 1/2 to 1 percent solution of silver nitrate on the cleared surface.

Table 2-8. Commonly used magnesium alloys

ALLOY (ASTM NO)	ALUMINUM	MANGANESE	ZINC	ZIRCONIUM	RARE EARTHS	THORIUM	MAGNESIUM
Sand and Permanent Mold Castings							
AZ92A	9.0	0.15	2.0	---	---	---	Balance
AZ63A	6.0	0.25	3.0	---	---	---	Balance
EK41A	---	---	---	0.6	4.0	---	Balance
EZ33A	---	---	2.7	0.7	3.0	---	Balance
HK31A	---	---	---	0.7	---	3.0	Balance
Die Castings							
AZ91A	9.0	0.20	0.6	---	---	---	Balance
Extrusions							
AZ31B	3.0	0.45	1.0	---	---	---	Balance
AZ61A	6.5	0.30	1.0	---	---	---	Balance
M1A	---	1.50	---	---	---	---	Balance
AZ80A	8.5	0.25	0.5	---	---	---	Balance
Sheet and Plate							
AZ31B	3.0	0.45	1.0	---	---	---	Balance
HK31A	---	---	---	0.7	---	3.0	Balance

Downloaded from http://www.everyspec.com

The metal is magnesium if the surface being tested turns black. When no reaction occurs, the metal is probably aluminum.

NOTE: Cadmium and zinc also react to silver nitrate, but these metals are in thin coatings and should be removed by previous filing.

Methods for Working

Magnesium alloys have excellent machining characteristics. Machine tools can be used on magnesium at maximum speed, with faster feed rates, to make heavy cuts. The power required to cut magnesium alloys is about one-sixth that needed for mild steel. An excellent surface finish can be produced on magnesium and in most cases grinding is not needed.

Table 2-9. Standard alloy designation system for magnesium

First part	Second part	Third part	Fourth part
Indicates the two principal alloying elements.	Indicates the amounts of the two principal alloying elements.	Distinguishes between different alloys with the same rounded-off percentages of the two principal alloying elements.	Indicates condition and properties.
Consists of two code letters representing the two main alloying elements arranged in order of	Consists of two whole numbers corresponding to rounded-off percentages of the two main	Consists of a letter of the alphabet assigned in sequence as compositions become	Consists of a letter followed by a number (separated from the third part by a dash).
decreasing percentage.	alloying elements and arranged in same order as the alloy designations in the first part.	standard.	
A-Aluminum E-Rare earth H-Thorium K-Zirconium M-Manganese Z-Zinc	Whole numbers	All letters of alphabet except I and O.	F-As fabricated. H-Strain-hardened and partially annealed. T4-Solution heat-treated. T5-Artificially aged only. T6-Solution heat-treated and artificially aged.

Downloaded from http://www.everyspec.com

Standard machine operations on magnesium can be performed to tolerances of a few ten-thousandths of an inch. This metal has no tendency to tear or drag. Magnesium alloy sheets can be worked using much the same methods as with other sheet metals. Sheets can be sheared in much the same way as with the other metals, except that a rough, flaky fracture is produced on sheets thicker than 0.064 inch. A better edge will be produced on a sheet thicker than 0.064 inch if it is sheared hot. Magnesium alloys tend to work-harden rapidly and cannot be formed to the radii normally used on aircraft. For this reason, wrought products made of these alloys are generally produced by hot working, rolling, extruding, or forging. The temperatures at which wrought alloys are formed range from 450° to 700°F (232° to 371°C). Parts formed at temperatures near the lower end of this range are stronger than those formed at higher temperatures. This is due to an annealing effect that varies with the temperature at which the forming is accomplished.

Magnesium alloys are quite resistant to normal atmospheric corrosion even when unprotected. When painted and given proper treatment, they will resist the corrosive effects of salt air. They should not be used for parts in continuous contact with salt water. Magnesium alloys suffer only visible surface corrosion and are not subject to intercrystalline corrosion. Unpainted engine castings that are usually oily or greasy do not suffer corrosion. Powdering and roughening of the surface indicate corrosion. Magnesium alloys must be insulated from contact with other metals to avoid electrolytic corrosion.

TITANIUM AND TITANIUM ALLOYS

Description

Titanium is in demand for items such as pumps, screens, and other tools and fixtures where corrosion is prevalent. Titanium is used in aircraft construction and repair for fuselage skins, engine shrouds, firewalls, longerons, frames, fittings, air ducts, and fasteners.

Crystal Structure

In the solid state, the atoms of each metal have a characteristic formation known as the crystal structure. How the atoms are arranged in this structure determines the characteristics of the metal. Alloying can alter or combine the crystal structures. The A-B-C classification of titanium alloys was established to provide a convenient and simple means of describing all these alloys. Titanium and titanium alloys have three basic types of crystal structures:

- A (alpha)—all-around performance; good weldability; tough and strong, both cold and hot, and resistant to oxidation; poor bendability.
- B (beta)—bendability; excellent bend ductility; strong, both cold and hot, but vulnerable to corrosion; heavy consumption of strategic alloys.
- C (combined alpha and beta for compromise performances)—strong when cold and warm, but weak when hot; good bendability; moderate corrosion resistance; excellent forgeability.

Characteristics

Titanium ranks between aluminum and stainless steel in terms of modulus of elasticity, density, and strength at high temperatures. It has a melting point of 2730°F to 3155°F (1499°C to 1735°C), low thermal conductivity, and low coefficient of expansion. It is light, strong, and resistant to stress-corrosion cracking in marine atmospheres. Titanium becomes softer as its percentage of purity increases. It is not practical to distinguish between the various grades of commercially pure or unalloyed titanium by chemical analysis. Therefore, these grades are determined by their mechanical properties. Titanium is about 60 percent heavier than aluminum and about 50 percent lighter than stainless steel. It has good strength properties up to about 1000°F (538°C). If subjected to temperatures of 1000°F (538°C) or higher for a long time, it becomes very brittle. This metal is nonmagnetic and has an electrical resistance comparable to that of stainless steel.

Some of the base alloys of titanium are quite hard. Heat treating and alloying do not develop the hardness of titanium to the high levels of some heat-treatable steel alloys. This alloy can be formed in the soft condition and heat-treated for hardness. In view of the high melting point of titanium, its high temperature properties are disappointing. Its ultimate yield strength drops rapidly above 800°F (427°C). The absorption of oxygen and nitrogen from the air at temperatures above 1000°F (538°C) makes the metal so brittle on prolonged exposure that it soon becomes worthless. However, titanium

Downloaded from http://www.everyspec.com

does have merit for short exposures up to 3000°F (1649°C), where strength is not important. Aircraft firewalls require this type of alloy. Iron, molybdenum, and chromium are used to stabilize titanium and produce alloys that will quench-harden and age-harden.

Adding these metals also increases the ductility of titanium alloys. Titanium has greater fatigue resistance than aluminum or steel. A peculiar characteristic of this metal is that it never reacts in the same way when forming sharp angles and bends. Titanium is very sensitive to stresses or strains. Its corrosion resistance also deserves special mention. Corrosion resistance involves the formation of a protective film of stable oxide or chemically absorbed oxygen. Film is often produced when oxygen and oxidizing agents are present. Corrosion is often reduced by impurities and minor components of commercial solutions. Laboratory tests with acid and saline solutions show that titanium polarizes readily. In general, the net effect of this polarization is to decrease corrosion caused by unlike metals. Corrosion currents on the surface of titanium and metallic couples are naturally restricted. This partly accounts for their good resistance to many chemicals. Titanium may also be used with some metals with no harmful galvanic effect on either. Corrosion of titanium is uniform. There is little evidence of pitting or other serious forms of localized attack. Normally, titanium is not subject to corrosion from stress or errosion, to corrosion fatigue, or to intergranular or galvanic corrosion.

Identification

Titanium is manufactured for commercial use in two basic compositions: commercially pure titanium and alloyed titanium. Type A-55 is an example of a commercially pure titanium. It has a yield strength ranging from 55,000 to 80,000 pounds per square inch and is a general-purpose grade for moderate to severe forming. It is sometimes used for nonstructural aircraft parts and for all types of corrosion-resisting applications, such as tubing. Type A-70 titanium is closely related to type A-55 but has a yield strength ranging from 70,000 to 95,000 pounds per square inch. It is used where higher strength is required and is specified for many moderately stressed aircraft parts. For many corrosion applications, it is used interchangeably with type A-55. Both these types are weldable.

Type C-110M is widely used for primary structural members and aircraft skin in airframe applications. It has a minimum yield strength of 110,000 pounds per square inch and contains 8 percent manganese. Type A-110AT is a titanium alloy that contains 5 percent aluminum and 25 percent tin. This type also has a minimum yield strength at high temperatures with the excellent welding characteristics found in alpha-type titanium alloys. Titanium is similar in appearance to stainless steel. One method used to quickly identify titanium is the spark test. Titanium gives off a brilliant white trace ending in a brilliant white burst. Titanium can also be identified by moistening it and drawing a line on a piece of glass. This will leave a dark line that looks like a pencil mark. Titanium is nonmagnetic. Table 2-10 shows the various types of titanium alloy compositions.

Methods for Working

Grinding

Titanium and its alloys can be ground at about the same rate of speed as hardened high-speed steels and die steels. Moderately light cuts are recommended. Periodic dressing is required to keep the wheel in proper condition, with the frequency of dressing depending on grinding conditions. Excessive wheel loading leads to poor grinding action with resulting poor surface finish, high residual tensile stresses, and low grinding ratios. Grinding difficulties can be minimized by using the proper type of wheels at low wheel speeds and feeds and by flooding the grinding area with an inhibiting or purging type of cutting fluid. The grinding temperature must be low to keep stresses low. Dry grinding is not recommended. Instead, proper wheel speed, frequent wheel dressing, and the use of appropriate wheels and grinding fluids are the minimum cutting requirements. The correct operation sheets for the parts concerned should specify the data for these variables.

High-quality machine tools are important for good grinding conditions. Rigid work and wheel setups are required to prevent vibrations that would otherwise contribute to surface damage. Grinding operations must be closely supervised and recommended procedures adhered to without any changes. When grinding methods are questionable, quick checks can be made by dye or fluorescent penetrants to identify possible surface cracking. Titanium parts should be handled with care to avoid nicking and scratching finished parts. (Some ground parts may need to be

Downloaded from http://www.everyspec.com

Table 2-10. Titanium and titanium alloys

Titanium and Titanium Alloy, Sheet, Strip, and Plate Military Specification MIL-T-9046J			
PERCENT ALLOY	CLASS	CONDITION	TENSILE STRENGTH (pounds per square inch-minute)
8Mn	1	Hot-rolled, annealed, and descaled	120,000
6Al-4V	2		130,000
5Al-2.5Sn	3		120,000
2Fe-2C4-2Mo	4		120,000
Titanium and Titanium Alloy Bars (Rolled or Forged) and Reforging Stock, Aircraft Quality MIL-T-9047G INT and 1			
Unalloyed	1	Hot-worked, annealed, and descaled	80,000
5Al-2-1/2Sn	2		115,000
3Al-5Cr	3		140,000
2Fe-2Cr-2Mo	4		130,000
6Al-4V	5		130,000
4Al-4Mn	6		140,000
5Al-1-1/2Fe-1-1/2Cr-1-1/2Mo	7		145,000

Al-Aluminum
Cr-Chromium
Fe-Iron (Ferrous)
Mn-Manganese
Mo-Molybdenum
Sn-Tin (Stannum)
V-Vanadium

stress-relieved by heat treating for some time before final inspection. One hour at 1000°F (538°C) is a common heat treatment.)

Drilling

Titanium and its alloys may be difficult to drill unless certain procedures are followed. The galling action between titanium and tool materials, when accentuated by high cutting temperatures, can result in a rapid dulling of the cutting lips of the drill. This, in turn, will result in poor cutting action and unsatisfactory holes. A cutting drill that is sharp produces tight, curled chips and is easy to drill with. As the drill becomes dull, the cutting temperatures rise, the metal begins to cling to the lips and margins of the bits, and the flow of chips becomes increasingly obstructed. The appearance of feathered chips from the flutes indicates that the drill is dull and should be

Downloaded from http://www.everyspec.com

replaced. The appearance of irregular and discolored chips indicates that the drill has failed. Drilling difficulties can be reduced by designing holes to be as shallow as possible, by using short, sharp drills of approved design and large amounts of cutting fluids so they will penetrate to the chip-tool contact areas for maximum cooling, and by using low speeds and heavy feeds. When improper drilling methods are used, the resulting holes are out-of-round, tapered, or rough-edged. If appropriate cutting procedures and drills are used, holes of proper size and quality will be produced. The rule stated above for handling titanium parts also applies to using the drill press and in transit.

Sawing

Power hacksaws, band saws, and friction saws are used for sawing titanium and its alloys. Successful band sawing of the AMS 4908 alloy is done with a standard 1/2-inch-wide blade that has 10 teeth per inch and rotates at about 2500 feet per minute. A constant rate of feed of about 25 feet per minute must be maintained. Water-soluble coolants are desirable. It is easy to do friction sawing if a positive feed is maintained and the cut is not interrupted. A heavy burr is formed, in proportion to the gage thickness, which must be removed. Sawed edges must be draw-filed or belt-sanded to remove the ragged edges before forming to prevent the possibility of subsequent cracking

Shearing

The application of shearing to titanium and its alloys is successful if the dies are in perfect condition. Without further hand filing, machining, or belt sanding to remove shear cracks, the die life will be short, maintenance costs will be higher, and sheared and blanked edges will be unsatisfactory. For gages of up to about 0.040 inch, it is sufficient to remove 0.010 inch from the sheared edge. For gages over 0.040 inch, 0.020 to 0.025 inch must be removed. Special attention must be paid to the sharpness of the shear knives; nicked knives should never be used. Straight shears are applied in the conventional manner. Blanking and piercing dies (male and female) are comparable to those used on 1/4-inch hard stainless steel. (Kirtsite blanking dies are not satisfactory.) Power contour shears, power roll shears, and unishears can be used. Gages thicker than 0.080 inch require square shears for both alloy and commercially pure titanium.

Marking

Commonly used marking tools are acceptable for titanium alloys, except for those that physically damage the surface such as impression stamps, scratch-awls, electric pencils, and punch marks. For example, holes drilled for locating pins are always punch-marked before drilling, while layout line intersections for locating parts are not punched. Titanium is stencilled in the direction of grain formation and parallel to rolling directions. Stencil paint must be removed before cleaning and relieving stresses; otherwise, damage will occur from stress effects during cleaning. By following basic rules and using proper equipment, you can form titanium sheet on a commercial production basis. Many forming operations are carried out at room temperature. The best results are obtained by slow working because titanium resists sudden movement. Stretching, hydro pressing, and draw pressing are preferable to punch pressing and drop-hammer work. After severe cold forming, stress relieving is desirable. Some parts are formed at room temperature, but others are more readily produced warm. Warming the dies or the work usually overcomes any problems that may be encountered in cold forming. Even minimum heating helps, but better results are obtained in the 500° to 800°F (260° to 427°C) range

Heat Treating

Several commercial high-strength titanium alloys are quite responsive to heat treatment, but only a few users of titanium have employed this treatment to gain strength. The major reason for this is that the quench-hardening process has not been completely perfected and is still difficult to use. Conventional methods of heat-treating titanium have resulted in brittle products. However, several types of treatment capable of enhancing alloy strength while maintaining adequate ductility are being researched. The heat-treatment potential of most titanium-base alloys is based on the metal undergoing chemical transformation. It can exist as two different crystal structures, with one being transformed into the other, depending on temperature. In broad outline, the process of alloy transformation to hardening includes formation of the higher temperature phase (beta) by heating, followed by sufficiently rapid cooling to retain some beta beyond the equilibrium point, and by its subsequent transformation to the lower temperature phase (alpha). Titanium is heat-treated to relieve stresses set up during cold forming or

Downloaded from http://www.everyspec.com

machining. It is fully annealed after hot working and thermal-hardened to improve strength, usually with some loss of ductility.

COPPER AND COPPER ALLOYS

Description

Copper is one of the most widely distributed metals in nature. It is the only reddish-colored metal and is second only to silver in electrical conductivity. Its use as a structural material is limited because of its great weight. However, in many cases, some of its outstanding characteristics, such as high electrical and heat conductivity, compensate for the weight factor. Because it is very malleable and ductile, copper is ideal for making wire. Salt water corrodes it, but fresh water does not. The ultimate tensile strength of copper varies greatly. For cast copper, the tensile strength is about 25,000 pounds per square inch; when cold-rolled or cold-drawn, the tensile strength increases in range to between 40,000 and 67,000 pounds per square inch. In aircraft, copper is used primarily in the electrical system and for instrument tubing and bonding. In the manufacture of tubing, the copper must be at least 99.9 percent pure. The standard tubing requirements for aircraft fuel, oil, and water lines call for dies ranging from a 1/8-inch to 1 1/8-inch outside diameter. A wall thickness of 35/1000 inch is used for tubing with diameters of less than 5/8 inch and a thickness of 49/1000 inch for larger diameters. Copper is used in the pure form and is alloyed with various other elements. The most common copper-base alloys are brass and bronze. In brass, the chief alloying element is zinc; in bronze, it is tin. Other copper-base alloys are beryllium copper and copper silicon.

Identification

Because the use of copper and copper alloys in repairing aircraft structures is limited, their identification by types is not covered here. Refer to MIL-STD-455B for identification of copper and copper alloys.

MONEL

Description

Monel is the leading high-nickel alloy. It combines the properties of great strength, notably at high temperatures, and excellent corrosion resistance. This metal is 68 percent nickel, 29 percent copper, 1.5 percent iron, and 1 percent manganese. It cannot be hardened by heat treatment and responds only to cold working

Identification

Refer to Table 2-11.

Methods for Working and Uses

Monel is adaptable to casting and hot or cold working, can be successfully welded, and has properties similar to steel. When forged and annealed, it has a tensile strength of 80,000 pounds per square inch that can be increased by cold working to 125,000 pounds per square inch, which ranks Monel among the tough alloys. Because of its corrosion resistance, Monel is substituted for steel where such resistance is a primary consideration. Monel has been successfully used for gears and chains, for operating retractable landing gears, and for structural parts that are subject to corrosion. In aircraft construction, Monel has been used for parts requiring both strength and high resistance to corrosion, such as exhaust manifolds, carburetor needle valves, and sleeves.

INCONEL

Description and Uses

Inconel is a nickel-chromium alloy containing about 77 percent nickel, 14 percent chromium, 7 percent iron, and small amounts of manganese, copper, and silicon. Inconel has great corrosion resistance, retains its strength at high temperatures, and remains bright under exposure to a wide variety of corrosives. The tensile strength of Inconel is very high, ranging from 80,000 to 100,000 pounds per square inch in annealed form and from 165,000 to 185,000 pounds per square inch in spring temper form. This metal responds to all standard joining methods. Inconel has the ability to resist the effects of combustion gases and to retain its strength and ductility at temperatures as high as 1600°F (871°C). This makes it valuable for use in aircraft exhaust stacks and manifolds, collector rings, cowling around exhaust pipes, firewalls, shrouding, and exhaust gas analyzer tubes. Because of its nonmagnetic quality, Inconel is suitable for use around aircraft compasses.

Identification

Refer to Table 2-12.

Methods for Working

Inconel can only be hardened by cold working, not by heat treatment. Machining Inconel is difficult and

Downloaded from http://www.everyspec.com

Table 2-11. Identification of Monel

Sheet, Plate, and Strip		
INDUSTRY STANDARD	FEDERAL SPECIFICATION	CONDITION AVAILABLE
ASTM B127-80A	QQ-N-281D, INT AMD 1(SH)	Sheet—Hot- or cold-rolled Plate—Hot-rolled Strip—Cold-rolled
	QQ-N-286D(2)	Sheet—Cold-rolled and annealed Strip—Cold-rolled and annealed; cold-rolled, annealed, and age-hardened; cold-rolled, 1/2-hard; cold-rolled, 1/2-hard, and age-hardened; cold-rolled, full-hard; cold-rolled, full-hard, and age-hardened
Bars, Forgings, and Rods		
	QQ-N-281D, INT AMD 1(SH)	Bars and Rods—Cold-drawn, hot-rolled Forgings—Hot-finished, high tensile
	QQ-N-281D, AMD 1(SH)	Bars and Rods—Cold-drawn, hot-rolled
	QQ-N-286D	Bars, Forgings, and Rods—Hot-finished, age-hardened; hot-finished, annealed; hot-finished, annealed, and age-hardened Bars and Rods—Cold-drawn (as drawn); cold-drawn, age-hardened; cold-drawn, annealed; cold-drawn, annealed, and age-hardened

Tubing			
INDUSTRY STANDARD	MILITARY SPECIFICATION	TYPE	CONDITION AVAILABLE
ASTM B165-81	MIL-T-1368C(2)	I. Seamless II. Welded	Annealed; hard, stress-relieved; stress-equalized

Downloaded from http://www.everyspec.com

Table 2-12. Identification of Inconel

INDUSTRY STANDARD	CURRENT SPECIFICATION	CONDITION AVAILABLE	FINISH
Sheet, Plate, and Strip			
ASTM B168-80A or AMS 5540J-80		Sheet—Cold-rolled and annealed Plate—Hot-rolled and annealed Strip—Cold-rolled and annealed, or spring temper	(1) Sodium hydride descaled (2) Acid pickled (3) Controlled atmosphere annealed (0.125 inch and less in thickness) (4) Cold-rolled (as rolled)
Bars, Forgings, and Rods			
ASTM B 166-81		A (Cold-drawn and annealed) B (Cold-drawn) C (Hot-rolled) D (Forgings, hot-finished) E (Forgings, hot-finished and annealed) F (Hot-rolled and annealed) G (Forging quality, for subsequent hot manipulation)	(1) Pickled (2) As drawn (3) As rolled or as forged (4) As annealed
AMS 5667H-79 AMS 5668-81 AMS 5568F-81	MIL-N-8550(2)	A (Hot-finished; rolled, forged, or extruded)	(1) Rough center-less ground

must be done at low speeds with carefully treated and sharpened tools. Machining generates considerable heat. Inconel bends easily. Military specifications require test pieces to withstand cold bending, for any direction of the sheet, without cracking, through an angle of 180° on a diameter equal to the thickness of the test specimen. For shop work, it is best for the bend radii to equal one thickness of the material. Inconel welds rapidly, producing a strong, sound, and ductile weld that resists corrosion. Welding may be done by electric arc, electric spark, seam, or oxyacetylene flame. Welded joints in the annealed material develop the strength of the base metal. As eevidence of its ductility, a welded sheet may be bent flat on itself, at right angles to the weld, or along the welded seam, without cracking the weld.

HARDNESS TESTING OF METALS

Hardness testing can determine both the results of heat treatment and the state of metal before heat treatment. Because hardness values can be compared with tensile strength values and with wear resistance, hardness tests are valuable checks of heat-treatment control and material properties. Hardness testing is done by various tools, all of which help the operator to find the ultimate strength of the

Downloaded from http://www.everyspec.com

Table 2-12. Identification Inconel (continued)

Bars, Forgings, and Rods			
INDUSTRY STANDARD	CURRENT SPECIFICATION	CONDITION AVAILABLE	FINISH
		B (Forging quality, for subsequent hot manipulation) C (Solution-treated) D (Solution-treated and high-temperature aged) E (Fully heat-treated; solution-treated, high-temperature aged, and aged	(2) Rough-turned (3) As hot-finished
AMS 5580F-79		I. Seamless II. Welded and drawn	Cold-drawn, annealed, and pickled

material. There are several hardness testers, such as the Brinell, Rockwell, Richle, Scleroscope, Shore, and Webster (hand-type). The Webster will be described here because it is the most versatile and the one that most shops will use.

Webster Hardness Tester

Description

There are three models of the Webster hardness tester: B, B-75, and BB-75. The hand-type tester (Figure 2-2) is a simple pliers-type unit with an anvil on one jaw to support the work and an indenter on the other jaw. This instrument is used for testing aluminum and aluminum alloys. When the indenter is forced into the metal, the dial indicator can be read directly during the pliers action. Care must be taken to apply the indenter jaws at right angles to the surface being tested. Any deviation from a right angle rotation will give an inaccurate reading.

Operating Principles

All models of the Webster hardness tester operate in the same manner. The material to be tested is placed between the anvil and the penetrator. Pressure is applied to the handles until "bottom" is felt, at which time the dial indicator is read. Excess handle pressure beyond this point is not harmful, but it is unnecessary. The tester should be held without moving while taking the reading. Any twisting or other movement during the test will result in inaccurate readings. The same principle applies to any other hardness testing machine. Figure 2-2 shows the principal working parts of this tester.

> NOTE: The penetrator assembly consists of the penetrator, load spring, adjusting nut, penetrator housing, housing key, return spring, and dial indicator. This entire assembly moves toward the anvil as a unit when pressure is applied to the handles.

To operate the tester, follow these procedures:

- Apply handle pressure to move the penetrator assembly toward the work. The penetrator point makes contact first because it projects beyond the flat face of the housing.

Downloaded from http://www.everyspec.com

Continued handle pressure causes the penetrator to recede into the housing against the load of the load spring.

- Rest the flat lower end or face of the housing against the work to feel "bottom." Further pressure on the handle squeezes the metal between the housing face and anvil. The only load on the penetrator is the load spring, which is controlled by the setting of the load spring adjusting nut.
- Actuate the dial indicator on the upper end of the penetrator housing by moving the penetrator. On extremely hard metal, the penetrator recedes into the housing until the tip is flush with the housing face. This is the position of maximum penetrator travel and is used for zero or full-scale setting of the dial indicator. It is obtained by compressing the penetrator all the way against the bare anvil. On extremely soft metal, the penetrator will not recede into the housing, will not move, and will not obtain a reading on the dial indicator.

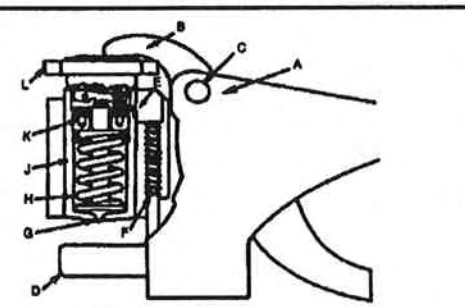

Figure 2-2. Webster hand-type tester

Zero and Load Spring Adjustments

There are only two adjustments on any model of the Webster hardness tester. The zero adjustment screw on top of the dial indicator case is adjusted at the factory to compensate for the accumulated tolerances of a particular penetrator, housing, and dial indicator. It need never be adjusted unless the indicating hand does not reach full-scale when the tester is operated against its bare anvil, or when one of the following factors applies:

- A new penetrator is installed.
- The dial indicator is changed from one penetrator to another.
- Excessive wear results in the need for a slight adjustment.

CAUTION

Do not turn the screw until after the handles are fully depressed. This prevents the possibility of the indicating hand passing full-scale, striking the case, and applying high torque to the indicator's internal mechanism.

Special Instructions

Model B tester. This tester has a single-point penetrator that is identified in Figure 2-3. The dial indicator is graduated from 1 to 20, and the hardness readings obtained can be compared to hardness readings on other testers, such as Rockwell and Brinell. As in all hardness testers, the amount of load exerted on the penetrator is determined by the load spring adjustment and is not affected by excess handle pressure.

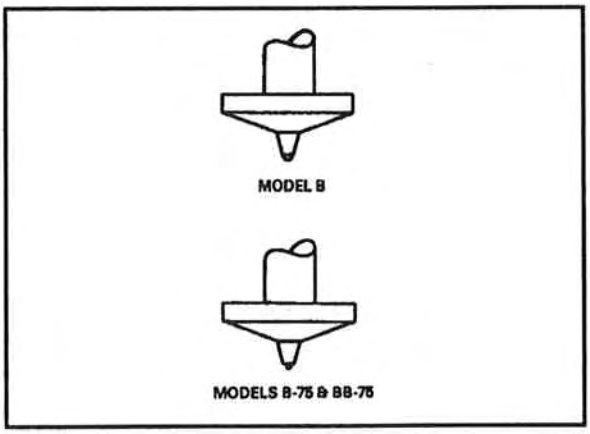

Figure 2-3. Penetrator identification

The handle pressure required to operate the model B tester is the least of all three models. This tester is used on aluminum and aluminum alloys, but it may also be used for other metals in the same hardness range. Each model B tester is accompanied by a standard sample with the correct dial indicator reading. This sample is used for routine checks to ensure proper load spring adjustment. Before making a

Downloaded from http://www.everyspec.com

check, the dial indicator must be in correct zero adjustment. If the reading on the dial indicator does not agree with the number stamped on the standard sample, the load spring adjustment must be changed until the readings agree. When adjusted properly, the readings on aluminum samples are approximately as shown in Figure 2-4.

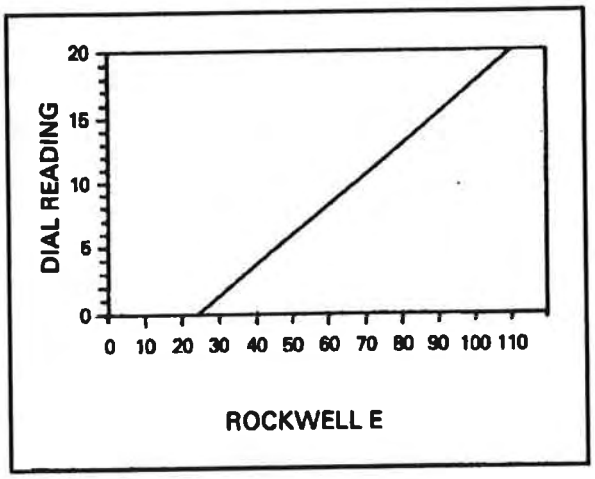

Figure 2-4. Hardness range, aluminum, model B

Model BB-75 tester. This tester is a combination of the model B-75 penetrator and the model B load spring. This combination provides slightly more sensitivity on the softer materials than do the B and B-75 testers. Model BB-75 was developed for rapid testing of electro-deposited copper and copper in the low hardness range. When adjusted properly, the readings obtained on copper samples are approximately as shown in Figure 2-5.

Model B-75 tester. This tester has a single-point penetrator with a different contour from the model B that can be identified from Figure 2-3. The same dial indicator is used for the B and B-75 tester. Graduations are from 1 to 20. Hardness readings obtained with the model B-75 can be compared to readings from other standard hardness testers, such as Rockwell. As in all models, the amount of load on

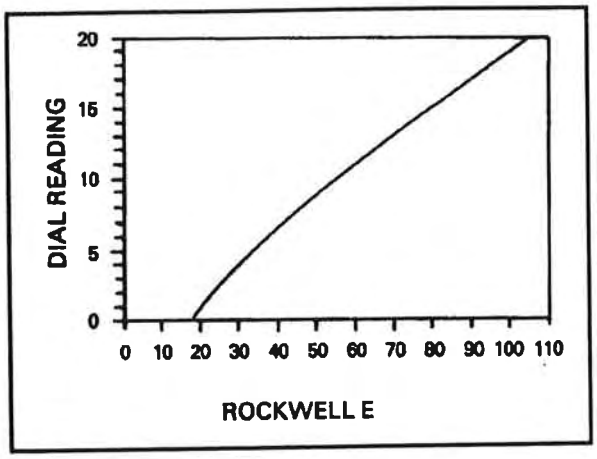

Figure 2-5. Hardness range, copper, model BB-75

the penetrator is determined by the load spring adjustment and is not affected by excess pressure on the handle. The model B-75 uses a slightly heavier load spring than models B and BB-75, but requires a little more pressure on the handles to operate it. The B-75 tester is designed for use on brass and mild steel, and its 20 dial graduations cover the hardness range from annealed to full-hard brass. This tester is more sensitive than the model B; therefore, it covers a smaller range of hardness. Each B-75 tester is accompanied by a standard sample with the proper dial indicator reading. This sample is used for routine checks to ensure proper load spring adjustment. Before making this check, ensure the dial indicator is in correct zero adjustment. If the reading taken on the standard sample does not agree with the number stamped on it, the load spring adjustment must be changed to make the reading agree. Given proper zero and load spring adjustment, readings obtained on brass and mild steel samples are approximately as shown in Figure 2-6.

Tables 2-13 and 2-14 show the cross-reference for the Webster tester for aluminum (bare or clad) and aluminum alloy. These tables should be used in conjunction with the dial reading and the Rockwell E scale shown in Figure 2-7.

Downloaded from http://www.everyspec.com

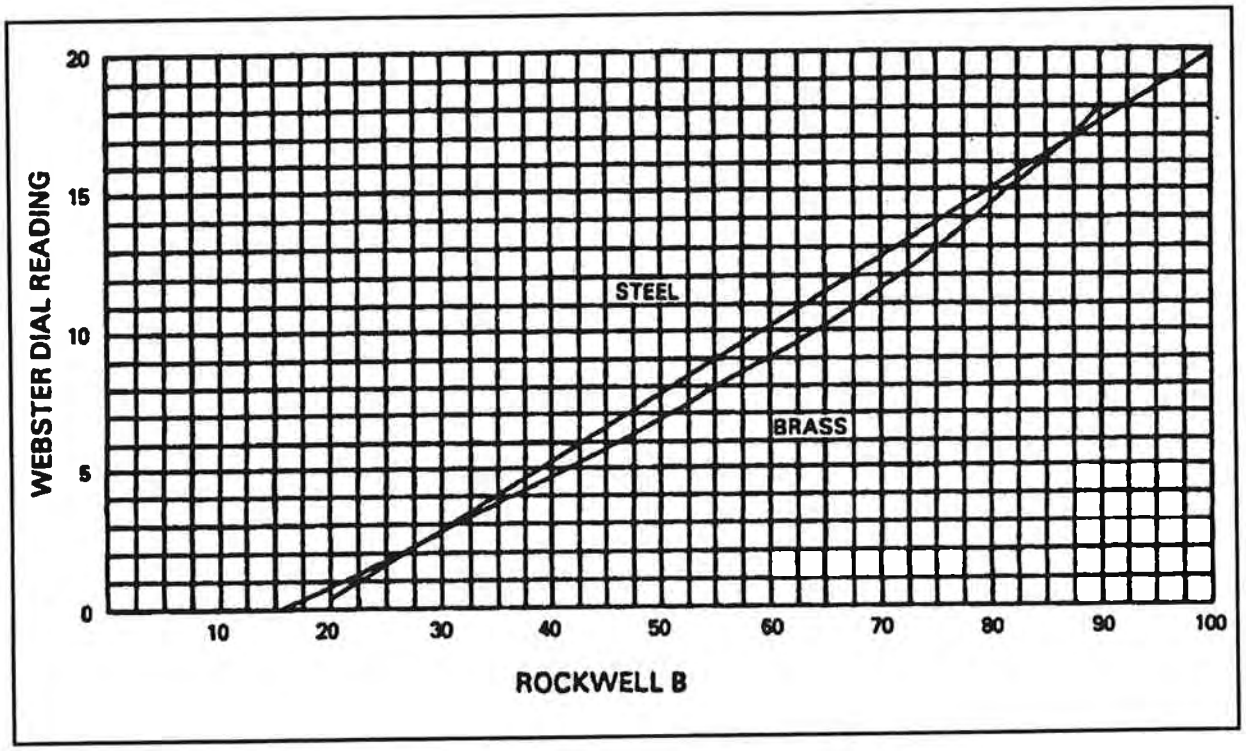

Figure 2-6. Hardness conversion for brass and mild steel

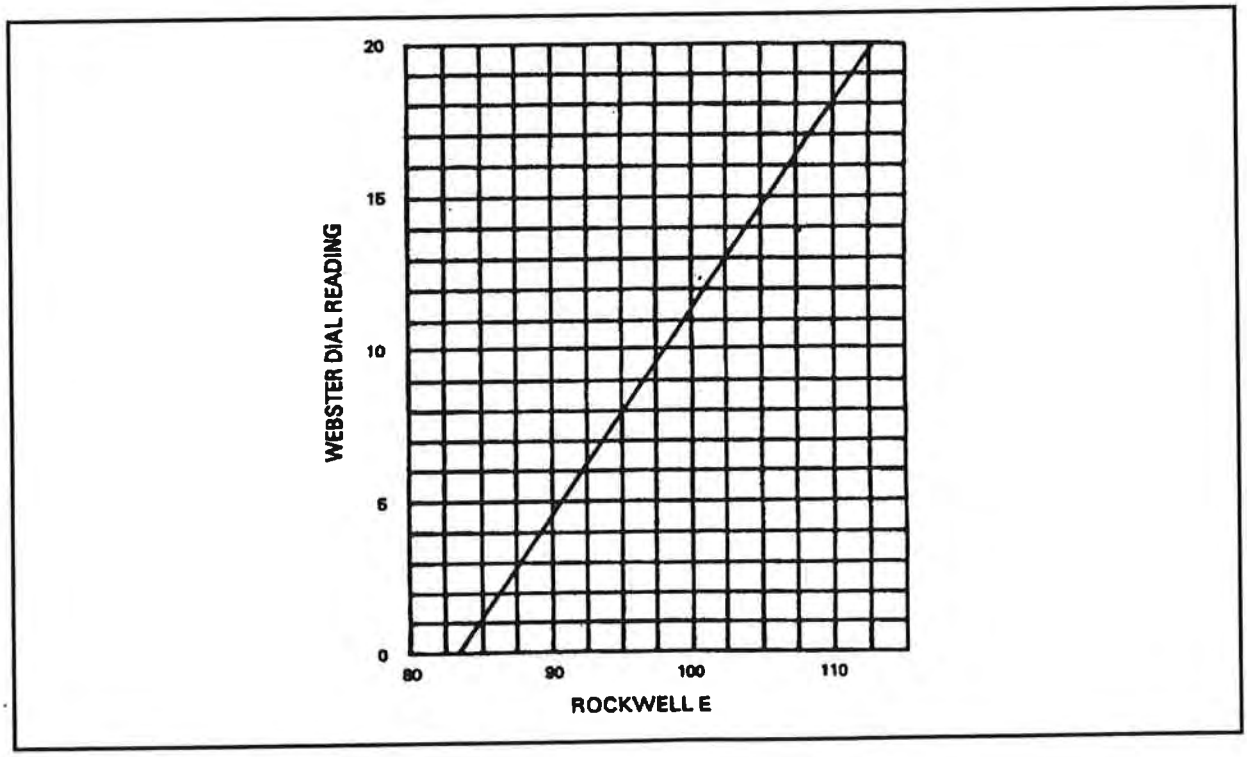

Figure 2-7. Hardness conversion for aluminum alloy

Downloaded from http://www.everyspec.com

Table 2-13. Percent of IACS (Internaltional Annealed Copperd Standard) conductivity values and Rockwell hardness values for 0.050-inch minimum thickness clad aluminum sheet and plate

PERCENT OF IACS (INTERNATIONAL ANNEALED COPPER STANDARD CONDUCTIVITY VALUES AND ROCKWELL HARDNESS VALUES FOR 0.050 INCH MIN THICKNESS CLAD ALUMINUM SHEET AND PLATE

ALLOY	TEMPER	HARDNESS VALUES[1] ROCKWELL E
2014	-0	NA[2]
	-T3, -T4	87 - 95
	-T42, -T45X	
	-T6, -T62, -T65X	104 - 110
2024	-0	NA
	-T3, -T45X	91 - 100
		93 - 102
	-T4, -T42	91 - 100
	-T4X	93 - 102
	-T6, -T62	99 - 106
	-T65X	
	-T81, -T85X	99 - 106
2219	-0	NA
	-T3	NA
	-T62	93 - 102
	-T81, -T85X	98 - 105 (0.050 in - 0.125 in)
6061	-0	NA
	-T4, -T45X	NA
	-T6, -T6X	84 - 96
		85 - 97 (0.125 in and under)
7075	-0	NA
	-T6, -T65X	104 - 110
		102 - 110
		102 - 110
7178	-0	NA
	-T6, -T65X	NA
		NA
	-T76	NA

[1]If hardness is within acceptable limits, parts are acceptable.
[2]NA means suitable acceptance values are not availiable.

Downloaded from http://www.everyspec.com

Table 2-14. Percent of IACS (International Anneald Copper Standard) conductivity values and Rockwell hardness values for bare aluminum sheet, plate, extrusions, and forgings

PERCENT OF IACS (INTERNATIONAL ANNEALED COPPER STANDARD) CONDUCTIVITY VALUES AND ROCKWELL HARDNESS VALUES FOR BARE ALUMINUM SHEET, PLATE, EXTRUSIONS, AND FORGINGS

ALLOY	TEMPER	HARDNESS VALUES[1] ROCKWELL E
2014	-0	NA[2]
	-T3, -T4, -T41	87 - 95
	-T42, -T45X	87 - 95
	-T6	103 - 110
	-T62, -T65X	104 - 110
	-T61	100 - 109
2024	-0	NA
	-T3, -T35X	97 - 106
	-T4, -T42	97 - 106
	-T6, -T62	99 - 106
	-T65X	99 - 106
	-T81, -T85X	99 - 106
2219	-0	NA
	-T3	NA
	-T6, -T81	NA
5052	-0	NA
	-H34	66 min
6061	-0	NA
	-T4, -T45X	60 - 75 Sheet and Plate 70 - 81 Extrusion and Bar
	-T6, -T6X	85 - 97
7075	-0	NA
	-T6, -T65X	106 - 114
	-T73, -T7351[3]	103 - 106
	-T73, -T7351[3]	103 - 114
	W	NA
7079	-0	NA
	-T6, -T65X	104 - 114
7178	-0	NA
	-T6, -T65X	105 min
	-T76	NA

[1]If hardness is within acceptable limites, parts are acceptable.
[2]NA means suitable acceptance values are not available.
[3]For all 7075-T73 or 7075-T7361 parts, determine both conductivity and Rockwell hardness.

Downloaded from http://www.everyspec.com

CHAPTER 3

SHEET METAL TOOLS AND SHOP EQUIPMENT

This chapter contains general information and instructions on sheet metal tools and shop equipment needed by airframe repairers to make aircraft structural repairs. It is important that airframe repairers select, use, and care for tools properly. Otherwise, injured personnel, wasted materials, and damaged equipment could result. Selecting the proper tools helps airframe repairers do their work accurately, safely, and on time. They need to know how to operate various types of shop equipment because there may be no large power presses and dies or heavy drop hammers available on flight lines or in depots to stamp out needed parts. Engineers and draftspersons capable of providing data or layout measures needed to make repairs may also be unavailable. Therefore, airframe repairers must be able to select materials, estimate original and final temper conditions, take measurements, make the layout and, in some cases, design and make the necessary forms or dollies on which a repair part will be shaped. A thorough understanding of these instructions, methods, and procedures will be a great asset to airframe repairers. TM 9-243 contains information on the care and use of hand tools.

Section I. Basic Hand Tools

LAYOUT AND MEASURING TOOLS

Layout and measuring tools are precision-designed, carefully machined, and accurately marked; sometimes they may contain delicate parts. Use them with care; avoid bending, dropping, or any other misuse that might impair their performance. The outcome of a job will depend on accurate measurements and layouts; therefore, you must fully understand how to read, use, and care for these tools, including rules, tapes, combination set, scriber, dividers, calipers, micrometer calipers, and gages.

Rules

Rules are usually steel and come in 4-, 6-, and 12-inch lengths. The inch is the most commonly used unit of measurement in aircraft metalwork. A rule has graduated markings expressed in divisions of 1/2, 1/4, 1/8, 1/16, 1/32, and 1/64 inch. Fractions of an inch may be expressed as decimals called decimal equivalents of an inch. For example, 1/8 inch is expressed as 0.125 (one hundred twenty-five thousandths of an inch). Rules come in two basic styles:

- Divided or marked in common fractions (Figure 3-1 [A], [B]).
- Divided or marked in decimals or divisions of hundredths of an inch.

A rule can be used either as a measuring tool or as a straightedge. To get an accurate measurement, turn the rule on edge and sight down the graduations. Because the end of a rule may become worn or damaged, it is more accurate to measure from one of the internal graduations (Figure 3-1[C]).

Tapes

Tapes come in several different kinds and lengths. Most commonly used is a 6-foot long, flexible steel tape coiled inside a circular case (Figure 3-2). This tape is graduated on one side in divisions of 1/2, 1/4, 1/16, and 1/32 inch. A small lip on the extending end is used to steady the tape while it is being used. The tape will bend but should not be bent intentionally because it can easily break.

Combination Set

The combination set (Figure 3-3) has several uses. It consists of a 12-inch grooved steel blade with graduated markings like those on a 12-inch rule, a center head, protractor head, and stock head, all made of cast steel. Each head slides along the blade and clamps at any desired position. Use the center head to find the center of shafting or other cylindrical work. Set the protractor head at any desired angle and use it to draw other than 45° lines. The stock head, sometimes called the square head, has a spirit level and a scriber. Use it to square plumb and level surface points on a material at the same time, or use it as a simple level.

Scriber

A scriber (Figure 3-4) is made of tool steel; it is 4 to 12 inches long and has two needle-pointed ends. One end is bent at a 90° angle to reach and mark through

Downloaded from http://www.everyspec.com

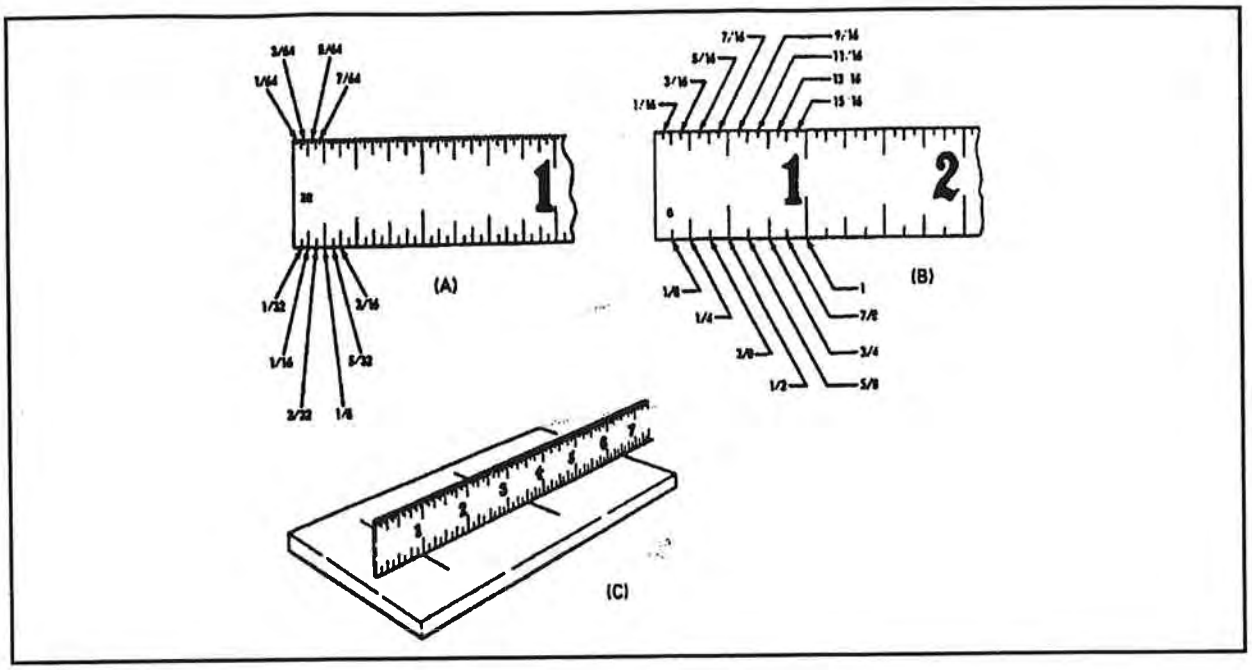

Figure 3-1. Types of rules and their use

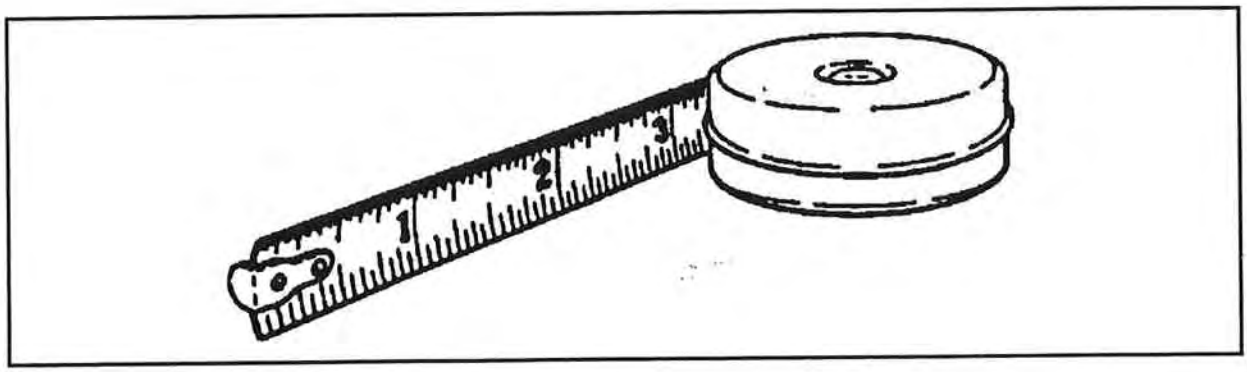

Figure 3-2. Flexible steel tape

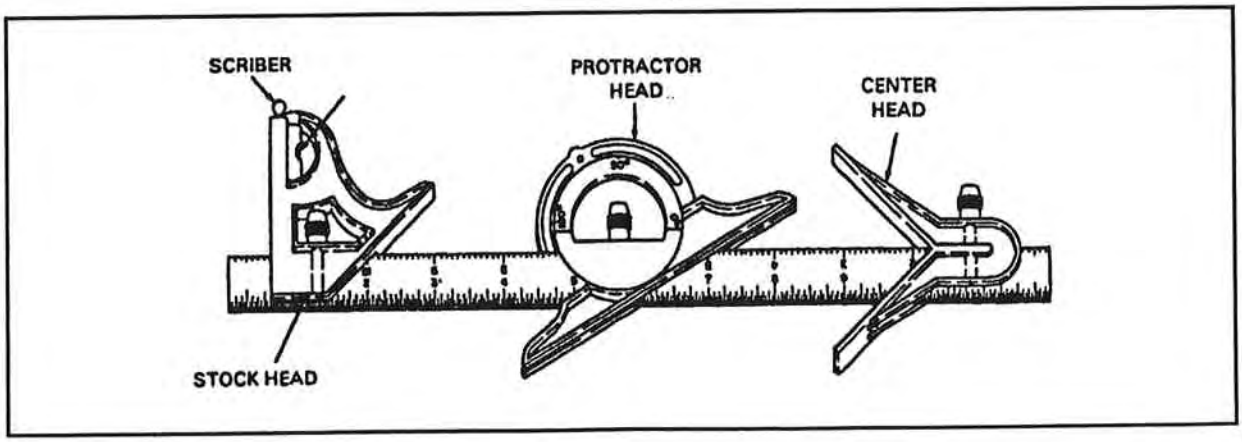

Figure 3-3. Combination set

Downloaded from http://www.everyspec.com

openings. An airframe repairer uses a scriber in the same way as a writer uses a pen or pencil; generally, to scribe or mark lines on metal surfaces. Before using a scriber, always inspect the points for sharpness. Make sure the steel rule you are using as a straightedge is lying flat on the metal and in position for scribing. Tilt the scriber slightly in the direction in which it will be moved. Hold it like a pencil. Keep its point close to the guiding edge of the steel rule. The scribed line should be heavy enough to be visible but no deeper than needed for its purpose.

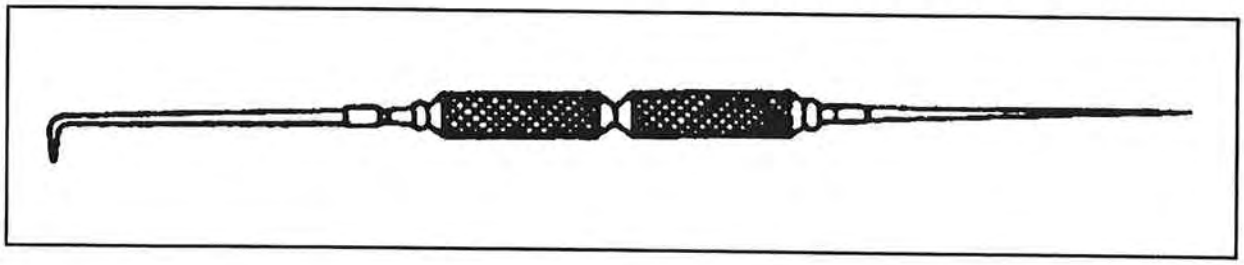

Figure 3-4. Scriber

Dividers

Dividers are used to measure distances between two points, to transfer or compare measurements directly from a rule, or to scribe an arc, radius, or circle. Figure 3-5 shows two types of dividers: spring type and wing type. A spring divider has two sharp-pointed straight legs held apart by a spring and adjusted with a screw and nut. It is available in 3- to 10-inch lengths. A wing divider has a steel bar separating the legs, a locking nut for rough measurements, and an adjusting screw for fine adjustments. It is available in 6-, 8-, and 12-inch lengths. In one improved version of the wing divider, the tip of one leg can be removed to allow insertion of a pencil.

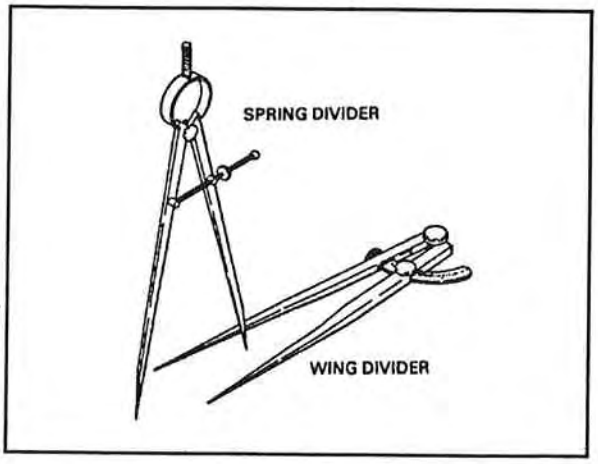

Figure 3-5. Dividers

To set the dividers, place one leg at a preselected spot on the material or rule, turn the adjustment nut, and place the point of the other leg at rest on the spot you are measuring to.

To draw an arc or circle with the divider, hold the top with thumb and forefinger. Place one leg on a preselected center point and press down on it to keep it from moving. Swing the other leg with a circular motion, applying pressure while it drags across the material so that its points will mark the line of an arc or circle. To keep the legs from slipping, incline the dividers in the same direction in which they are being rotated.

Calipers

Calipers are used to measure diameters or compare distances and sizes. The four common types of calipers are: inside, outside, hermaphrodite, and slide. Calipers have setting and adjustment features that can be manipulated to measure work as required. There are also several special types of calipers, such as gear tool calipers.

Inside calipers (Figure 3-6) have legs that are curved outward for measuring inside diameters, such as the diameters of cylinder bores and holes, the distance between two surfaces, the width of slots, and other similar measurements. To ensure accurate readings of caliper measurements, make sure the setting and adjustment knob and screw are securely locked after measurements have been made.

Outside calipers (Figure 3-7) have legs that are curved inward for measuring the outside dimensions of round stock, such as shafts, pipes, rods, and other objects. Methods for setting and adjusting outside calipers are similar to those used for inside calipers.

Downloaded from http://www.everyspec.com

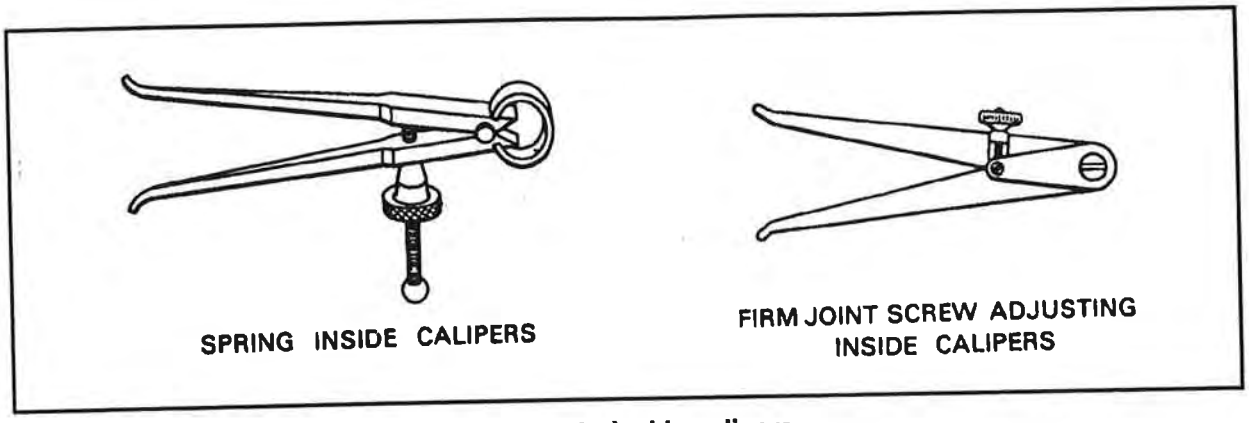

Figure 3-6. Inside calipers

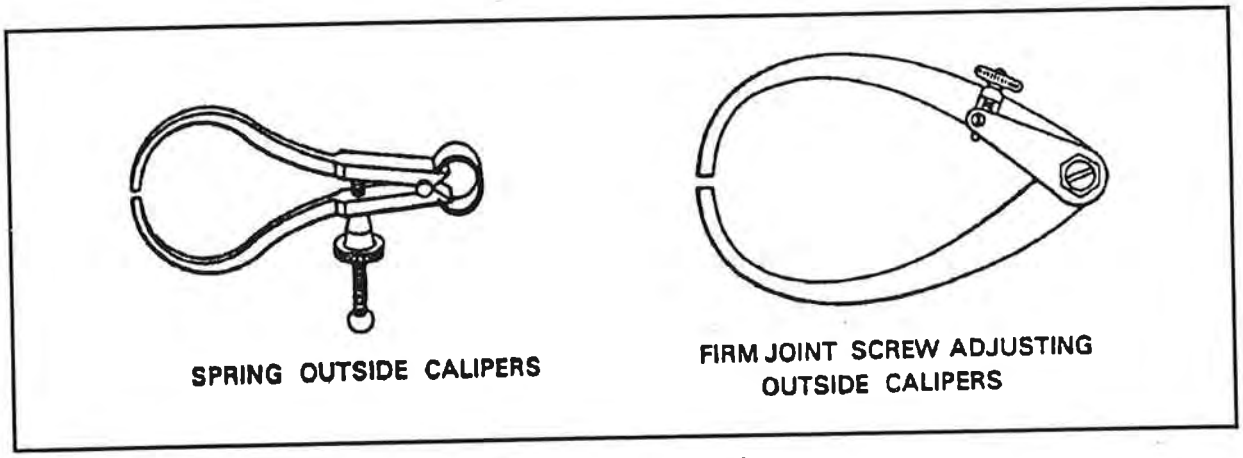

Figure 3-7. Outside calipers

Hermaphrodite calipers (Figure 3-8) have one leg that ends in a point; the other leg has a bearing surface. Hermaphrodite calipers are used to scribe lines or arcs on material in layout work. They should never be used for precision measurement.

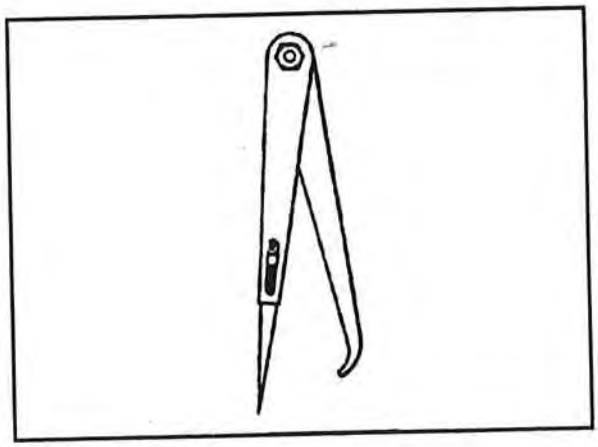

Figure 3-8. Hermaphrodite calipers

Slide calipers (Figure 3-9), sometimes called slide caliper rules, eliminate the need to use a regular scale rule. The slide caliper has a vernier scale for use in extremely fine measurements. The caliper blade is graduated in fortieths, or 0.025, of an inch. Every fourth division represents 1/10 inch. The vernier scale has a space divided into 25 parts, numbered 0, 5, 10, 15, 20, and 25. These 25 divisions cover the same space as 24 divisions on the caliper blade. To read the slide caliper, add the total number of tenths (0.100) and fortieths (0.025) together from zero to the front of the slide head. From the last tenth shown, add the remaining fortieths from that point to the front of the slide head. For an even more accurate reading, determine which line on the vernier scale aligns with a line on the tenth or fortieth scale of the slide bar. Take the number from the vernier scale and place it at the end of the total reading from the tenth and fortieth scale. This will change the reading from hundredths to thousandths of an inch.

Downloaded from http://www.everyspec.com

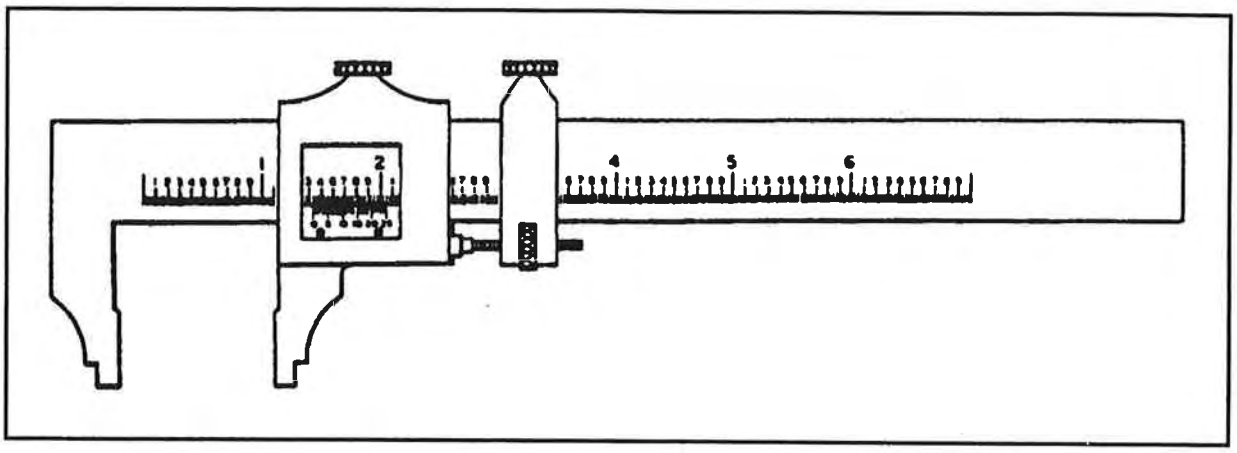

Figure 3-9. Slide caliper with vernier scale

Micrometer Calipers

Micrometer calipers are the most accurate adjustable measuring instrument. Their internal parts are cut on a precision machine grind. There are four types of micrometer calipers, each designed for a specific purpose:

- Outside micrometer (Figure 3-10) the type most commonly used by airframe repairers for measuring outside dimensions of shafts and round stock and other similar measurements; also used to set inside calipers to a desired dimension. The fixed parts of an outside micrometer are the frame, barrel, and anvil; the movable parts are the thimble and spindle. The thimble rotates the spindle that moves in the threaded portion inside the barrel. The thimble is turned to open and close the space between the faces for measuring work on the anvil and at the end of the spindle.
- Inside micrometer used to measure inside diameters of cylinders and the width of recesses and to make other similar measurements.
- Depth micrometer used to measure depth of recesses or holes.
- Thread micrometer used to measure pitch diameters of screws and bolts.

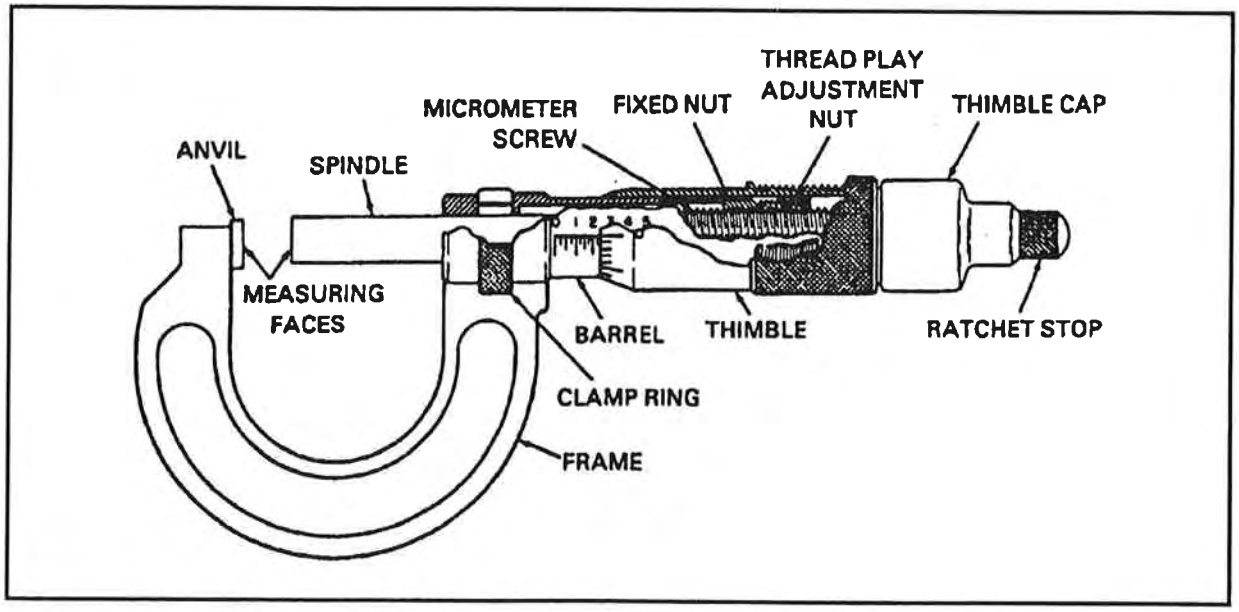

Figure 3-10. Outside micrometer

Downloaded from http://www.everyspec.com

A micrometer is used to measure dimensions smaller than any that can be measured with a steel rule or tape. For example, the smallest measurement that can be made with a steel rule is 1/64 (0.01) inch. However, the micrometer can measure thousandths and ten-thousandths of an inch. The barrel of a micrometer is marked in equal spaces to indicate the number of revolutions made by the thimble. The lines on the barrel marked 1, 2, 3, 4, and so on, indicate measurements of tenths, or 0.100, 0.200, 0.300, 0.400 inch, respectively (Figure 3-11). When a micrometer is used to measure a dimension given in a common fraction, the fraction must be converted into its decimal equivalent.

The outside edge of the thimble is beveled and divided into 25 equal spaces. Each space represents one twenty-fifth of the distance traveled by the thimble along the barrel in moving from one 0.025-inch division to another. Thus, each division on the thimble represents 1/1000 (0.001) inch.

For convenience, these divisions are marked 0, 5, 10, 15, and 20 at intervals of five spaces each (Figure 3-12). When 25 of these graduations have passed the horizontal line on the barrel, the spindle has made one revolution and moved 0.025 inch.

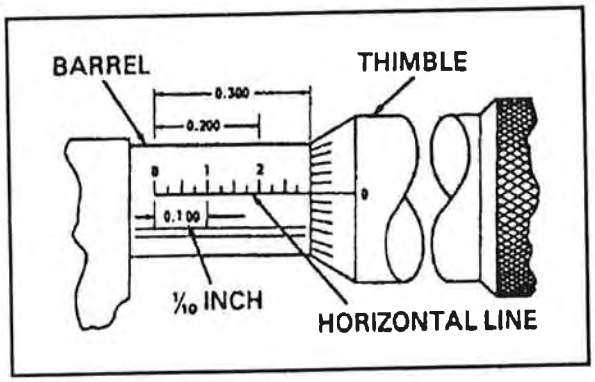

Figure 3-11. Micrometer measurements

Reading a Micrometer

The following steps relate specifically to reading an outside micrometer, although the process is similar for all types of micrometers:

- Note the last visible number on the horizontal line of the barrel that represents tenths of an inch.
- Add to this number the number of visible graduations shown on the barrel between the thimble and the number previously noted. (Multiply the number of graduations by 0.025 inch to get this number.)
- Add to this the number of divisions on the bevel edge of the thimble that coincides with the line of graduations on the barrel.
- Add all these numbers together to get the total measurement.

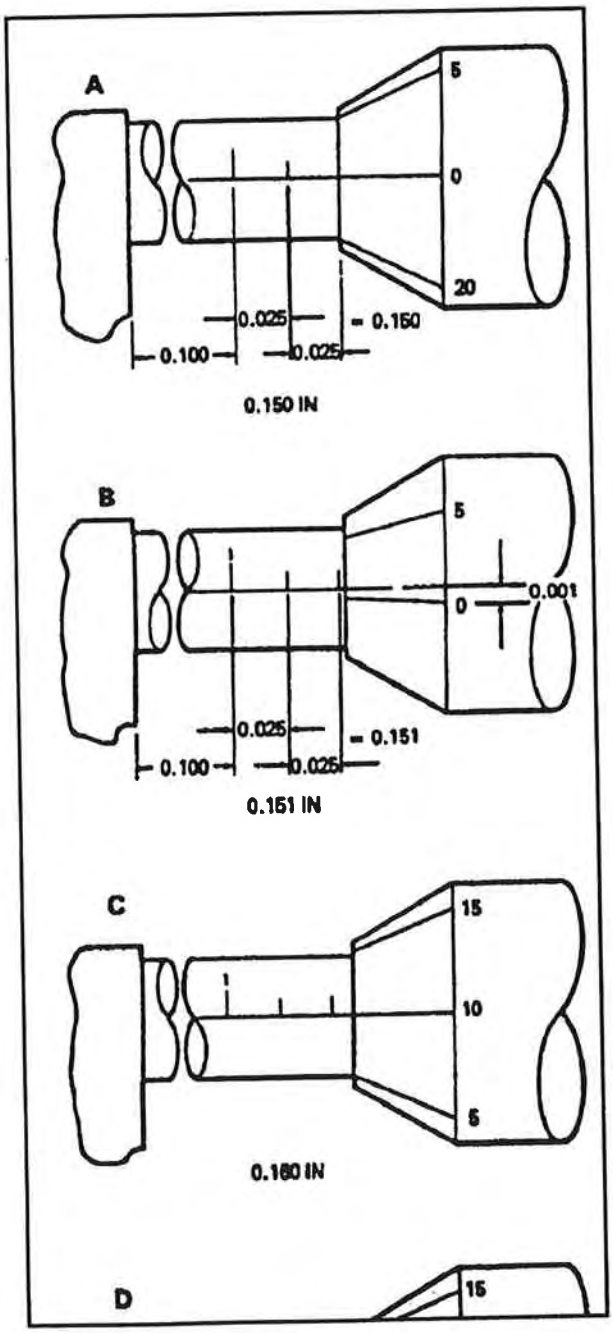

Figure 3-12. Micrometer readings

Downloaded from http://www.everyspec.com

Using a Vernier Scale

Some micrometers are equipped with a vernier scale. A vernier scale enables you to read directly a fraction of a division indicated on the thimble scale. The vernier scale consists of a series of 11 lines marked off in 10 spaces parallel to the centerline of the micrometer barrel. The space between any two of these lines equals nine-tenths of the space between two marks on the thimble. Figure 3-13 shows the three scales on a micrometer and presents typical examples of the vernier scale as it applies to the micrometer. The three scales are not all fully visible without turning the micrometer; however, the examples are drawn as though the micrometer barrel and thimble were laid out flat to allow you to see all three scales at once. The barrel scale here is the lower horizontal scale, the thimble scale is the vertical one on the right, and the longer horizontal lines above the barrel scale (0 through 9 through 0) make up the vernier scale. The barrel scale is graduated in 0.025-inch segments. Thimble scale graduations divide this 0.025-inch scale into 25 parts, each equal to 0.001 inch; vernier graduations further divide the 0.001 inch into 10 equal parts, each equal to 0.0001 inch.

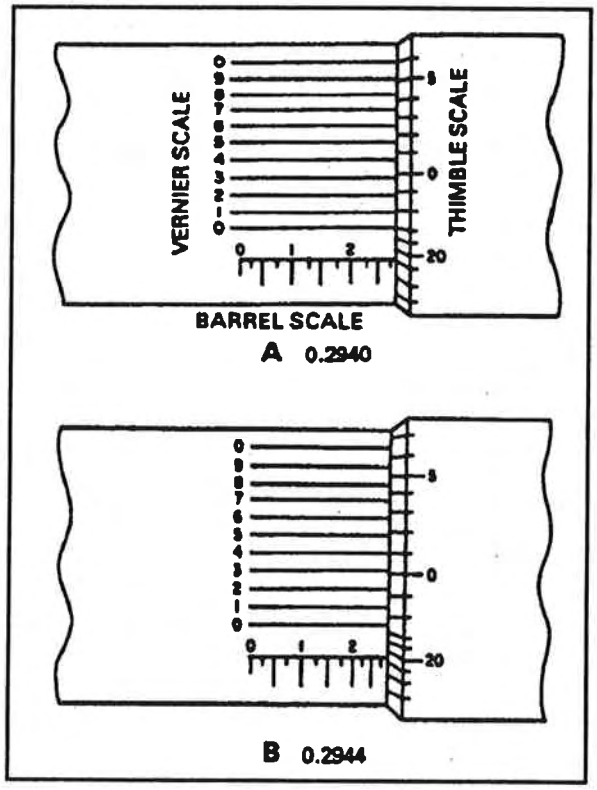

Figure 3-13. Three scales of a micrometer

When the end of the thimble is located between two graduations on the barrel scale, select the graduation with the lowest value to get the barrel scale reading. When the centerline on the barrel is between two graduations on the thimble scale, select the graduation with the lowest value to get a thimble scale reading. Obtain the vernier scale reading by selecting the number on the vernier scale that aligns exactly with a graduation on the thimble. Follow these instructions when reading a vernier scale:

- Note the barrel scale reading. (Remember the values of the different scale graduations.)
- Add the thimble scale reading to this number.
- Place the number of the vernier scale reading to the right of the total of the barrel and thimble scale readings. The resulting number is the final reading in ten-thousandths of an inch.

For example:

- In Figure 3-13(A) the barrel reads 0.275 and the thimble 0.019 inch. This graduation aligns exactly with the barrel reference line. Because the vernier scale zeros are both aligned, there is no decimal part of a division to be added. Note that none of the vernier scale lines between the two zeros coincides with a line on the thimble. The final reading is 0.2940 inch.
- In Figure 3-13(B) the barrel reads 0.275 inch; the thimble reads more than 0.019 but less than 0.020 inch. Add the lower number to the barrel reading of 0.275, for a total of 0.294. The vernier scale shows the number 4 aligned with a line of the thimble. Place this number to the right of the number 0.294, for a final measurement of 0.2944 inch.

Handling a Micrometer

Handle a micrometer with care. Dropping it can permanently affect its accuracy. Continually sliding work in and out of the micrometer may cause the anvil and spindle surfaces to become worn. If the spindle is tightened too much, the frame may be sprung permanently, resulting in inaccurate readings.

Figure 3-14(A) shows the right way to hold a micrometer when checking a small part. Hold the part in one hand and the micrometer in the other hand so that the thimble rests between your thumb

Downloaded from http://www.everyspec.com

and forefinger. Position your third finger to hold the frame against the palm of your hand. This makes it easy to guide the work over the anvil. Your thumb and forefinger are in position to turn the thimble either directly or through the ratchet to bring the spindle over against the work.

Figure 3-14(B) shows the right way to hold a micrometer when checking a part too large to hold in one hand. Keep the part stationary and position it to be accessible to the micrometer. Hold the frame in position with one hand and square it to the surface being measured. Operate the thimble with the other hand, either directly or through the ratchet. A large part that is flat should be checked in several places to determine the amount of variation from thickness.

Figure 3-14(C) shows the right way to hold a micrometer to gage a shaft. Hold the frame with one hand while you operate the thimble with the other. When gaging a cylindrical part with a micrometer, you must feel the setting to make sure the spindle is on the diameter. Also check the diameter in several places to determine the amount of out-of-roundness.

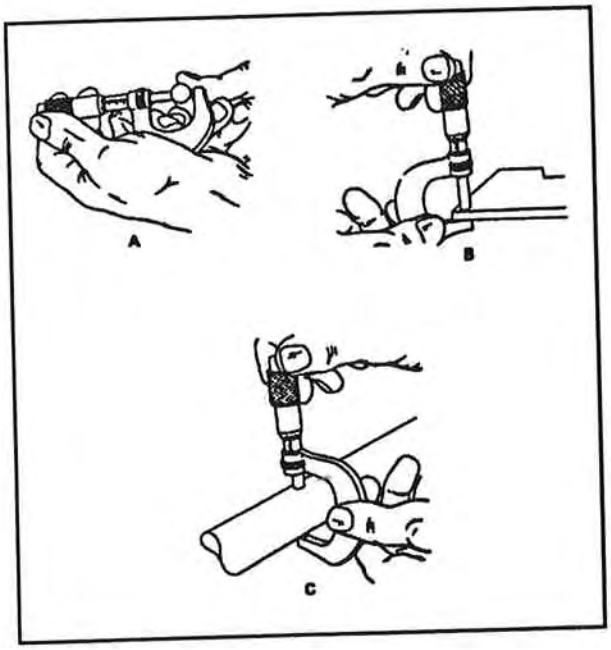

Figure 3-14. Holding a micrometer

Gages

Gages are fixed measuring instruments which are made of hard steel to retain their accuracy even after much use. They are constructed with either a series of openings in specific widths or a series of leaves in specific thicknesses. The following types of gages are most commonly used by airframe repairers:

- Thickness gage—used to measure clearances (Figure 3-15). It has a series of thin leaves, each ground to a definite thickness that is marked on the leaf. The leaves are usually in sets, with one end fastened in a case. A leaf should be clean before attempting to insert it in an opening. Two leaves may be used together when a single leaf of the desired thickness is not available.
- Radius gage—used to determine the radius of curved surfaces by selecting the leaf that corresponds to the surface being gaged (Figure 3-16). It is similar to the thickness gage, except that all its leaves are equally thick and the sides of each leaf are curved at a specific radius that is marked on each.

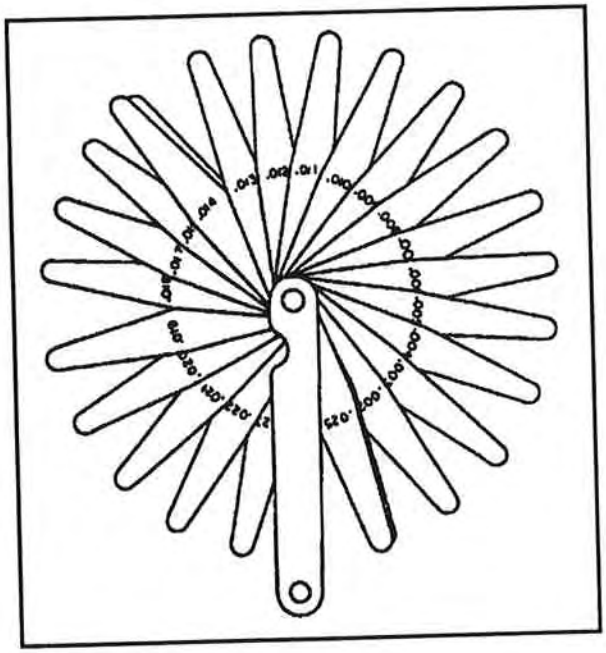

Figure 3-15. Thickness gage

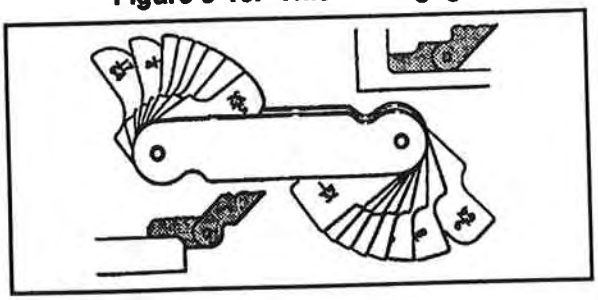

Figure 3-16. Radius gage

Downloaded from http://www.everyspec.com

- Thread gage – used to determine the number of threads per inch on bolts and screws by selecting the leaf of the gage that corresponds to the threads of a bolt or screw (Figure 3-17). The thread gage is also similar to the thickness gage, except that the leaves are all equally thick and their edges have teeth. The number of teeth per inch is marked on each leaf and varies from one leaf to another.

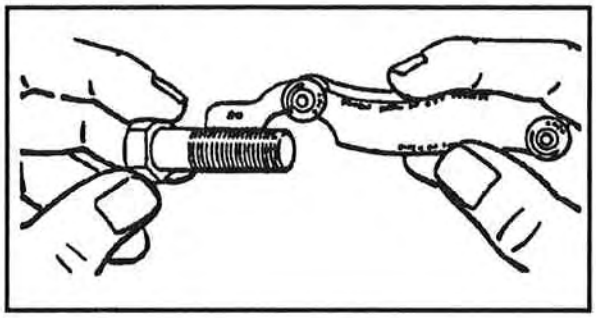

Figure 3-17. Using a thread gage

- Twist drill gage – used to determine the drill-bit size required to drill holes for wire, rivets, and bolts (Figure 3-18). This gage is a smooth-finish, round or rectangular steel plate containing a series of round holes that correspond in size to a series of drills. The right size drill may be selected by fitting the parts in the twist drill gage holes. These gages have letter, number, decimal, and fractional hole sizes.
- Sheet metal and wire gage – used to determine the thickness of sheet metal and wire (Figure 3-19). It is similar to a twist drill gage except that it has gage lots on the outer edge. Standard sheet metal and wire gages are the American Standard, English Standard, and US Standard. The American Standard, shown in Figure 3-19, is the most commonly used for aircraft sheet metal and wire. Place sheet metal and wire into the gage slots until the correct fit is found.
- Drill grinding gage – used to determine the angle of the cutting lips of a drill bit (Figure 3-20). It is shaped like the letter T, with the ends of the T's crossbar cut off at an angle of 59°, the correct angle for the cutting lips of a drill. The edge of the gage is marked in 1/8-inch divisions to measure the length of the lips and the angle of the drill.

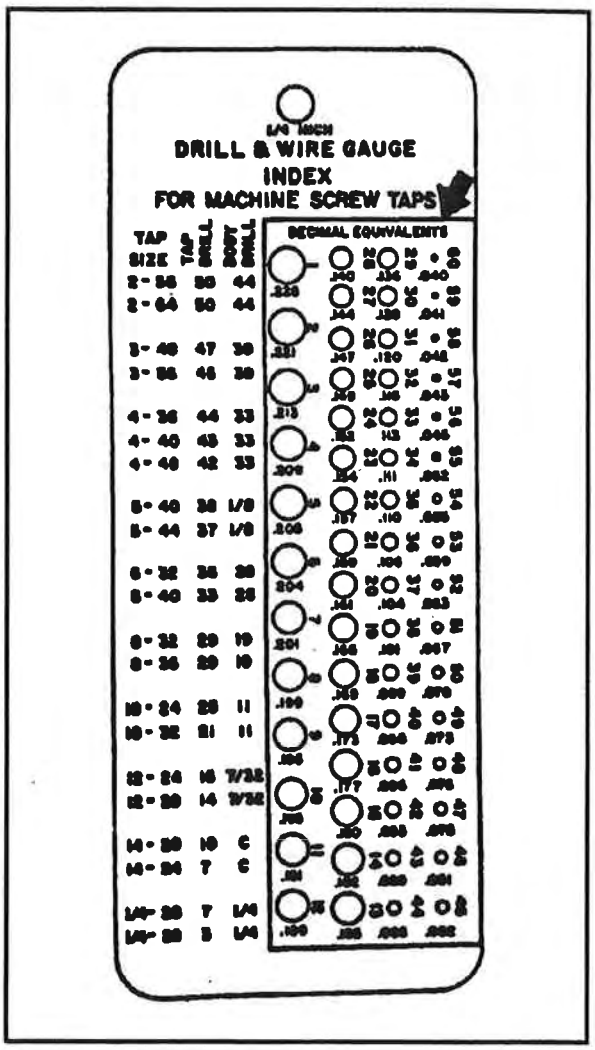

Figure 3-18. Twist drill gage

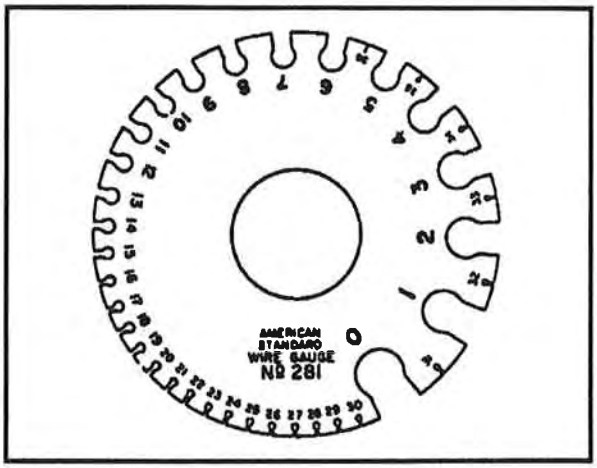

Figure 3-19. Sheet metal and wire gage

Downloaded from http://www.everyspec.com

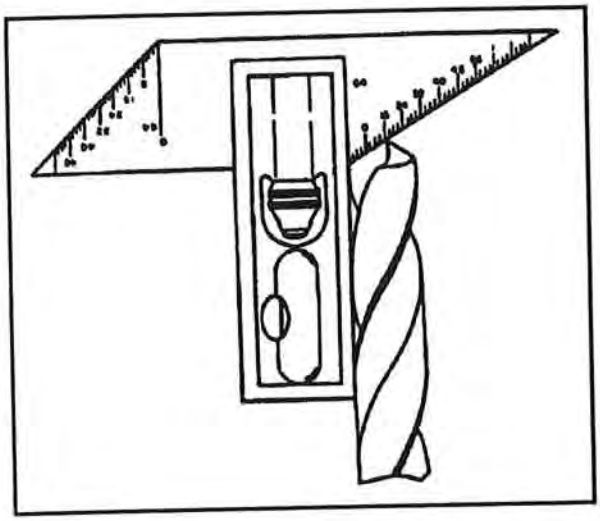

Figure 3-20. Drill grinding gage

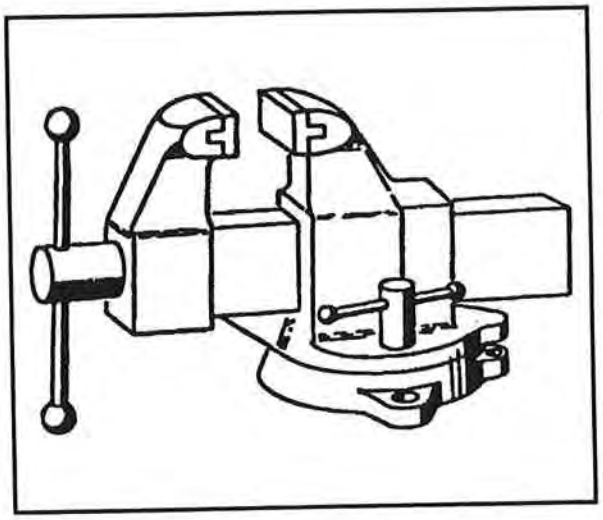

Figure 3-21. General shop vise

HOLDING TOOLS

Several types of holding tools are used when working sheet metal (including sheet metal screws). The operation being performed and the type of metal being used determine what holding tools should be used. The types of holding tools most commonly used by airframe repairers are the various sheet metal holders, pliers, and wrenches.

Sheet Metal Holders

These devices include general shop vises, cleco fasteners, and C-clamps.

General shop vises (Figure 3-21), such as the utility bench vise, the machinist vise, and the blacksmith vise, are used in almost all airframe metalworking. The utility bench vise is designed to hold heavier material; and its back can be used as an anvil for light work. The machinist vise has a swivel base and flat jaws. The blacksmith vise is similar to the machinist vise except that it has a leg extending to floor level, which enables the vise to hold material so that it can be pounded hard with a hammer.

Cleco fasteners are widely used to hold metal and keep drilled parts made of sheet metal stock pressed tightly together to prevent them from slipping or separating while being riveted or fastened. Cleco fasteners are available in six sizes: 3/32, 1/8, 5/32, 3/16, 1/4, and 3/8 inch. The most commonly used clecos are color-coded: 3/32 (silver), 1/8 (copper), 5/32 (black), and 3/16 (gold). Figure 3-22 shows the cleco and its holding feature.

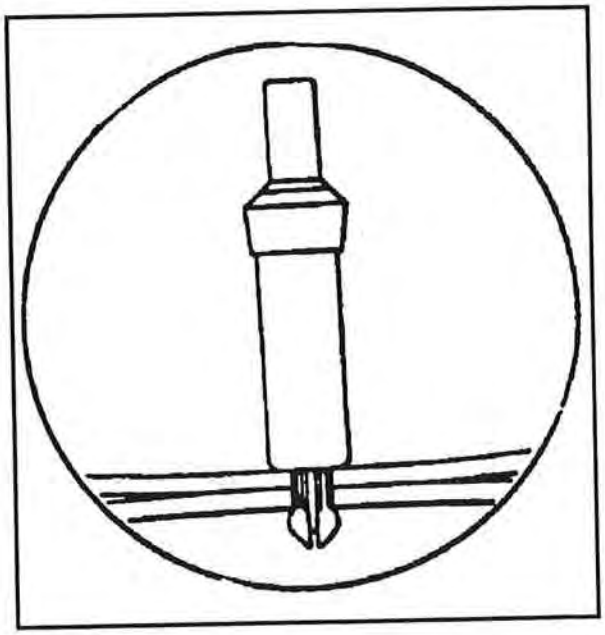

Figure 3-22. Cleco fastener

A C-clamp (Figure 3-23) is used to hold or clamp objects together. Shaped like a large letter C, it has three main parts: a threaded screw, a jaw, and a swivel head. The swivel head at the base of the screw prevents the end of the screw from turning directly against the object being clamped. Clamps vary in size from 2 inches upward. Its C shape allows a clamp to be fastened around obstructions near the edge of the work. Clamps tend to spring out of shape; therefore, they should only be tightened by hand.

Downloaded from http://www.everyspec.com

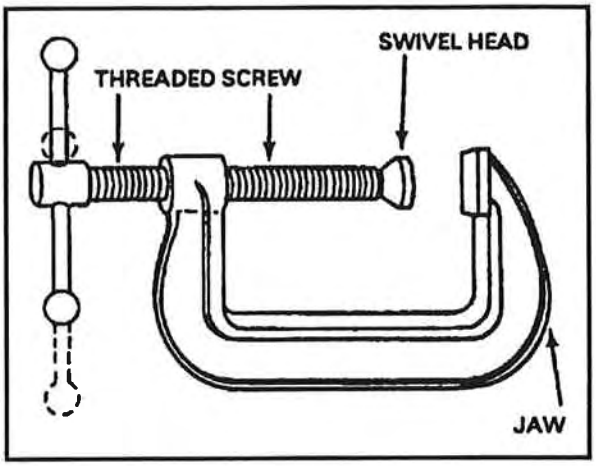

Figure 3-23. C-clamp

Pliers

Several types of pliers are used in airframe work; most frequently used are the combination, flatnose, roundnose, flatnose side-cutting, diagonal-cutting, clamp, and special for inserting cleco fasteners. Sizes of pliers are indicated by their overall length, which usually ranges between 5 and 12 inches.

Combination pliers (Figure 3-24) are mainly used for holding and bending flat or round stock. Six-inch combination slip-joint pliers are the preferred size for repair work. The slip joint allows the jaws to be opened wider at the hinge for gripping larger diameters. These all-purpose pliers come in sizes ranging from 5 to 10 inches. The better grades of combination pliers are made of drop-forged steel.

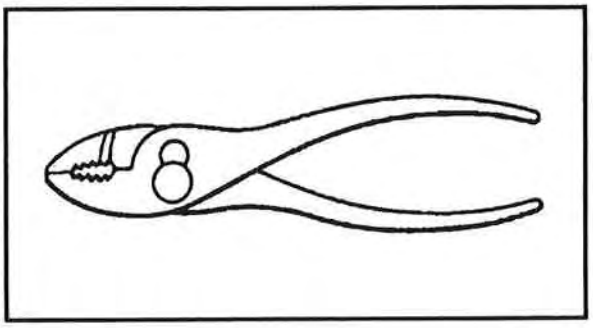

Figure 3-24. Combination pliers

Flatnose pliers (Figure 3-25) are satisfactory for making small flanges. Their jaws are square, fairly deep, and usually well aligned; the hinge is firm. These characteristics ensure a sharp, neat bend.

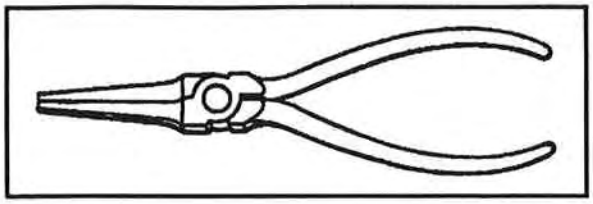

Figure 3-25. Flatnose pliers

Roundnose pliers (Figure 3-26) are used to crimp metal. They are not intended for heavy work because too much pressure on them will spring their jaws, which are often wrapped to prevent scarring the metal being held.

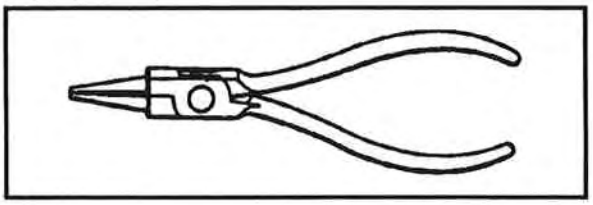

Figure 3-26. Roundnose pliers

Flatnose side-cutting pliers (Figure 3-27) are used to work in limited spaces and to bend or form metal into various shapes. These pliers are equipped with side cutters for cutting wire and metal and are available in different sizes.

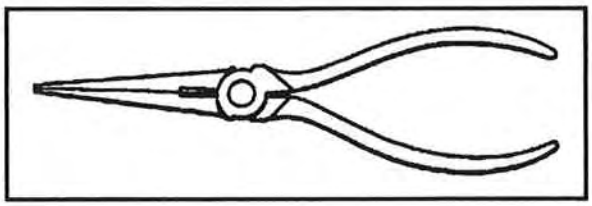

Figure 3-27. Flatnose side-cutting pliers

Diagonal cutting pliers (Figure 3-28), usually referred to as diagonals or dikes, are short-jawed cutters with blades set at a slight angle on each jaw. They can be used to cut wire, rivets, small screws and bolts, and cotter pins. They are also good tools for removing or applying safety wire.

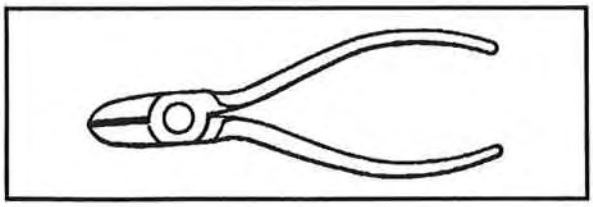

Figure 3-28. Diagonal-cutting pliers

Downloaded from http://www.everyspec.com

Clamp pliers (Figure 3-29) are used for bending sheet metal, locking templates to blank sheets, and holding metal for welding. These pliers lock the work with a powerful grip and keep it from slipping. The grip can be adjusted for different metal thicknesses by turning the screw in the end of the handle.

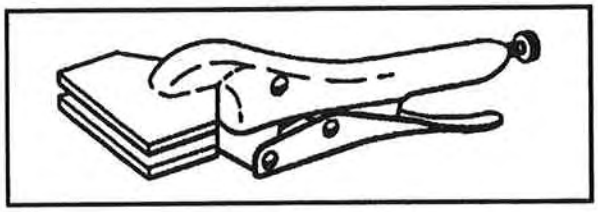

Figure 3-29. Clamp pliers

Special cleco fastener pliers (Figure 3-30) are used to insert the cleco fastener. One pair of pliers will fit all six sizes of fasteners.

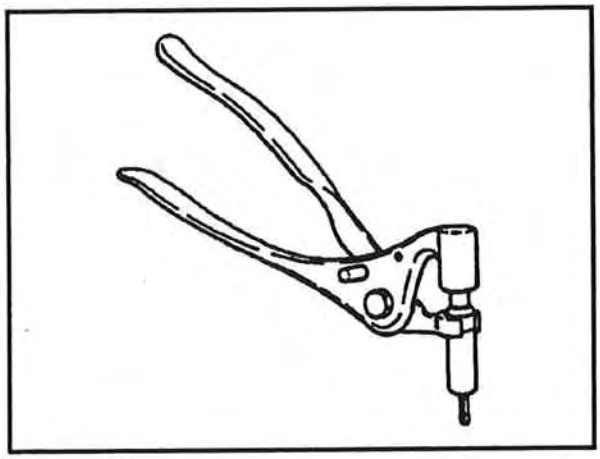

Figure 3-30. Cleco fastener pliers

Wrenches

The wrenches most often used by airframe repairers are classified as open-end, box-end, combination, socket, adjustable, and special. Most wrenches are made of chrome-vanadium steel.

Open-end wrenches have solid, nonadjustable, parallel, open jaws on one or both ends (Figure 3-31). These wrenches are designed to fit a nut, bolt head, stud, or other object so that it can be loosened, tightened, or removed by turning. They usually come in sets of 6 to 12 wrenches that have a series of jaw sizes ranging from 5/16 to 1 inch. Some have jaws parallel to the handle or set at an angle of up to 90°; most are set at an angle of 15°.

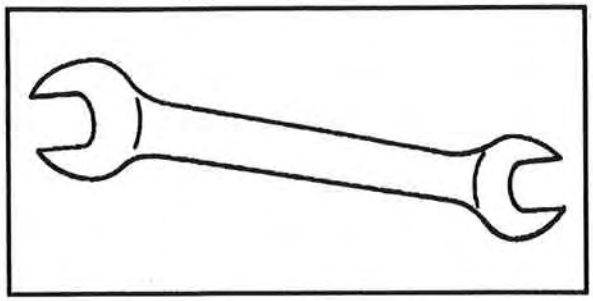

Figure 3-31. Open-end wrenches

Box-end wrenches (Figure 3-32) are widely used because they are very suitable for working in areas where space is restricted. They are called box-end wrenches because they box or completely surround the nut or other object concerned. Almost all box-end wrenches are made with 12 points on the inside of the "box" so that a 15° pull or swing can be made in close working areas.

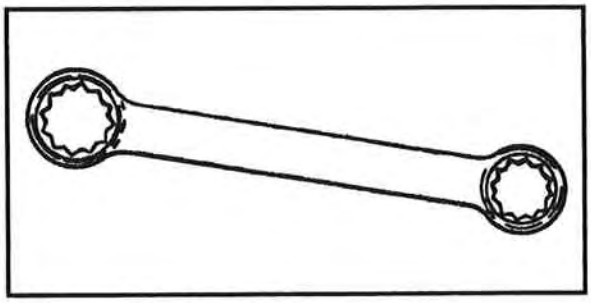

Figure 3-32. Box-end wrenches

Combination wrenches (Figure 3-33) have one box end and one open end. This configuration enables them to remove a nut or other object that has broken loose more quickly and efficiently than a box-end wrench because the open-end can be manipulated faster.

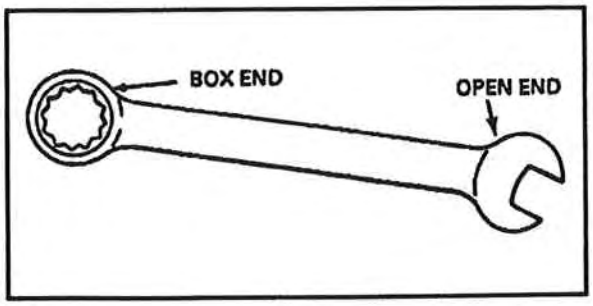

Figure 3-33. Combination wrench

Downloaded from http://www.everyspec.com

Socket wrenches (Figure 3-34) are designed for faster turning so that objects can be removed or installed quicker. These wrenches consist of two parts: the socket (which fits over the object) and the handle (which fits into the socket). Several types of handles, extensions, ratchets, and other attachments are available to allow socket wrenches to be used in almost any area. They are made with either fixed or detachable handles.

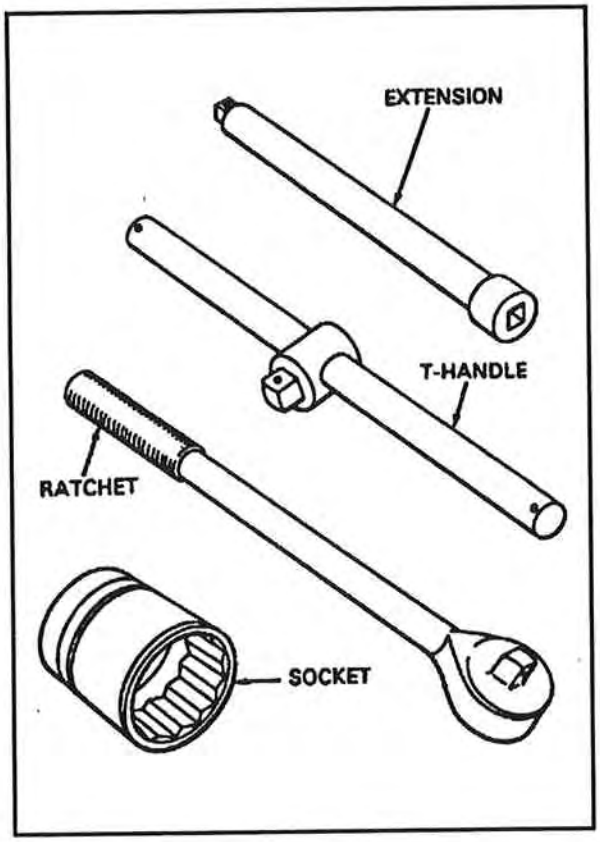

Figure 3-34. Socket wrench

Adjustable wrenches (Figure 3-35) come in several sizes, usually determined by the length of the handle. One jaw is fixed; the other can be positioned as needed by turning a thumb screw or spiral screw-worm in the handle. When fully closed, the space between the jaws varies from zero to 1/2 inch or more. The jaws are smooth and designed like the jaws of an open-end wrench. The angle of the opening to the handle is usually 22 1/2°.

These features give the adjustable wrench a versatility that allows it to do the work of several open-end wrenches; it is however, not intended to replace the standard open-end, box-end, or socket wrench. When using any adjustable wrench, always pull on the side of the handle attached to its fixed jaw.

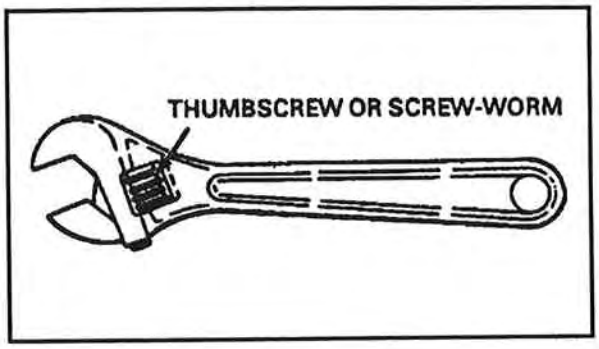

Figure 3-35. Adjustable wrench

Special wrenches (Figure 3-36) include allen, spanner, and torque wrenches. Each of these wrenches is designed for a specific purpose; there are several varieties of each type.

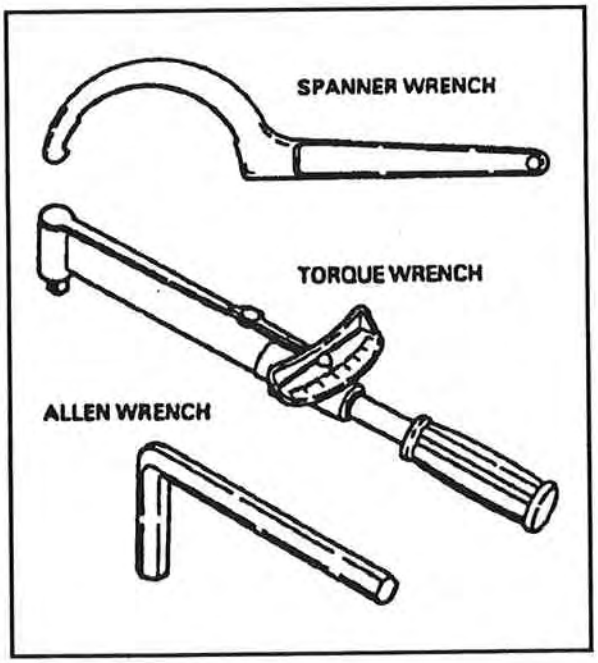

Figure 3-36. Special wrenches

STRIKING TOOLS

Striking tools used by airframe repairers to form, set up, and attach metalwork are hammers and mallets. To minimize marring of the work, always keep hammer faces smooth and free from dents.

Downloaded from http://www.everyspec.com

Hammers

Hammers used for working sheet metal are also made of metal (Figure 3-37). They may be used for light or special bumping, or dinging, as applicable. There are three types of these hammers:

- Stretching hammers, sometimes called raising hammers, are used to make small depressions or to form concave and convex shapes on soft and semisoft sheet metal. They are available in weights ranging from 20 to 90 ounces.
- Planishing hammers are mainly used to smooth or planish the surfaces of parts that have already been formed. These hammers have metal heads with slightly convex faces. They are lighter than stretching hammers. In planishing, the metal is placed on a smooth surface, such as a forming block or stake; and its irregularities are eliminated by striking them lightly with the face of the hammer. In many cases a flat-face wooden, plastic, or rawhide mallet is also used for planishing.
- Ballpeen hammers are used for striking and driving hard objects, such as punches and chisels. The face of these hammers is hardened.

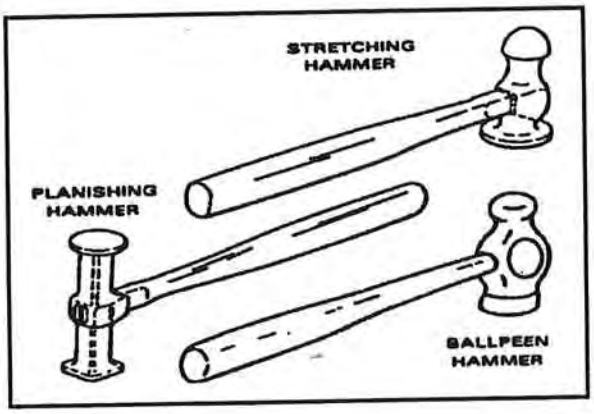

Figure 3-37. Hammers

> **CAUTION**
>
> **Never use a ballpeen hammer to strike another hammer face. This action could result in chipping and possible injury to personnel.**

Mallets

Mallets are generally used for pounding down seams or forming sheet metal over forms or stakes. They are often used also for finishing because, unlike steel hammers, they do not scar metal. Mallets are classified as plain-face or stretching (Figure 3-38):

- Plain-face mallets are all-purpose mallets with flat faces. They are best suited for planishing or finishing small dents and crimps during the forming process. They are usually made of hardwood or rawhide.
- Stretching mallets have bell-shaped, round, or cross peen ends that are used for stretching or shrinking and a flat-faced end used for planishing. Bell-shaped and round-faced mallets are useful for bumping aluminum on a sandbag or into forming blocks. Stretching mallets are made of hardwood, hard rubber, or plastic.

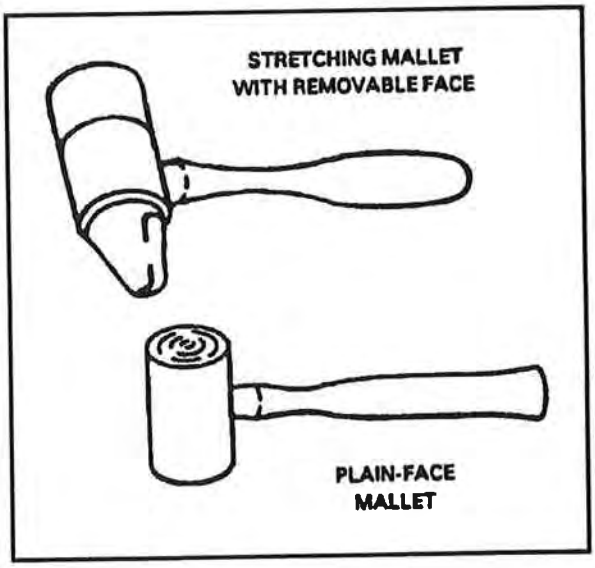

Figure 3-38. Mallets

CUTTING TOOLS

There are several methods of cutting sheet metal. Because of the particular type or location of work, airframe repairers will often find it impractical to use power-driven metal-cutting tools. In most cases they will use metal-cutting hand tools, such as hand shears, bench shears, aviation snips, straight snips, circle snips, twist drills, taps and dies, reamers, countersinks and counterbores, files, chisels, and hacksaws.

Downloaded from http://www.everyspec.com

Hand Shears

Hand shears can be used to cut metal of up to 20-gage thickness (Figure 3-39). There are two basic types of hand shears: straight (or regular) for straight cutting and curved for making small circular cuts. The better grade of hand shears have tapered blades with inlaid steel cutting edges. The grips of the shears, often called bows, are shaped to fit the hand and centered to give the maximum amount of leverage for cutting.

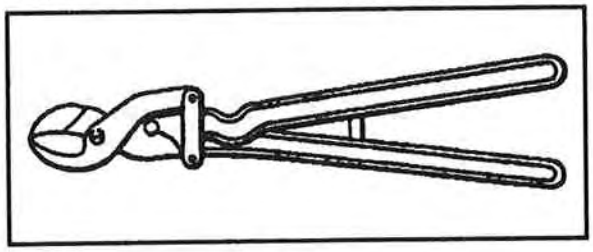

Figure 3-39. Hand shears

Bench Shears

Bench shears are designed for cutting thicker metals (20 to 16 gage) (Figure 3-40). The lower shank fits into a bench plate while the upper shank is raised and lowered by hand to cut the metal.

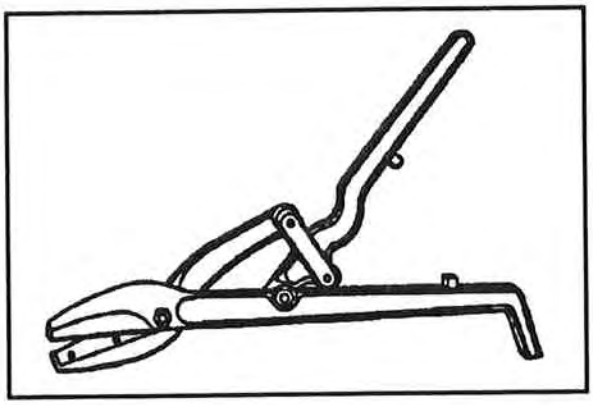

Figure 3-40. Bench shears

Aviation Snips

Aviation snips are specially designed to cut heat-treated aluminum alloy and stainless steel (Figure 3-41). They can also be used to enlarge small holes. Their blades have small teeth on the cutting edges and are designed for cutting very small circles and irregular shapes. The handles are of the compound-leverage type, which enables the snips to cut material as thick as 0.051 inch. Two kinds of aviation snips are available: those that cut from right to left, and those that cut from left to right.

CAUTION

1. Never use snips as pliers or wire cutters.

2. Never use snips to cut materials thicker than 0.051 inch, which can spring the blades and make them useless.

When cutting, place the upper blade of the snips on the line to be followed and keep it perpendicular to the surface of the metal. Waste metal should curl up along the upper edge of the lower blade.

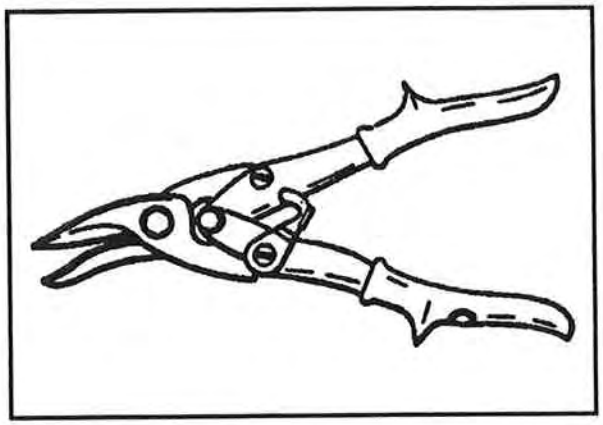

Figure 3-41. Aviation snips

Straight Snips

Straight snips are made to be used by both right- and left-handed persons (Figure 3-42). They are used to cut sheet stock along straight lines or along circles of large diameters.

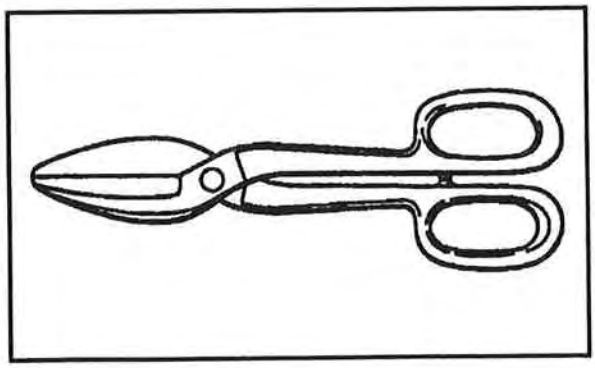

Figure 3-42. Straight snips

Downloaded from http://www.everyspec.com

Circle Snips

Circle snips have curved blades and are designed for cutting small inside and outside circles and scrolls (Figure 3-43). Before circle snips can be used, a starting hole must first be drilled inside the outline of the desired circle.

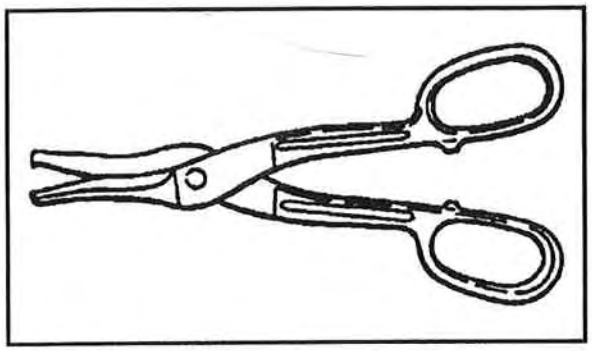

Figure 3-43. Circle snips

Twist Drills

The term drill can refer to the steel part, called a bit, that has one end inserted in a drilling tool or machine and that creates the hole by its rotating motion. Drill can also refer to the tool or machine itself that the bit fits into. In power-driven machines, drill can mean power drill. Bit is simply another word for the twist drill with its parts (Figure 3-44). Twist drills are made of carbon steel or high-speed alloy steel. Carbon steel drills are used for a wide variety of jobs. High-speed alloy steel twist drills are used to drill tough metals, such as stainless steel. High-speed twist drills will cut even when they are hot. However, they should be cooled in air at room temperature because if they are cooled too quickly (in water, for example), they may crack. Also, if the twist drill is allowed to rotate inside the chuck (the part into which the twist drill is clamped), the chuck may scratch the shank so badly that the drill size cannot be determined. If that happens, a micrometer or drill gage should be used to determine the correct size twist drill.

Hand Drills/Hand Machines

Hand drills (Figure 3-45) are hand tools commonly used to hold and turn twist drills. The hand drill is suitable for use in drilling relatively soft materials. It has a chuck that will receive a twist drill of up to 1/4-inch diameter; holes of 1/4-inch diameter or less can be drilled. This size is large enough for most drilling done by airframe repairers.

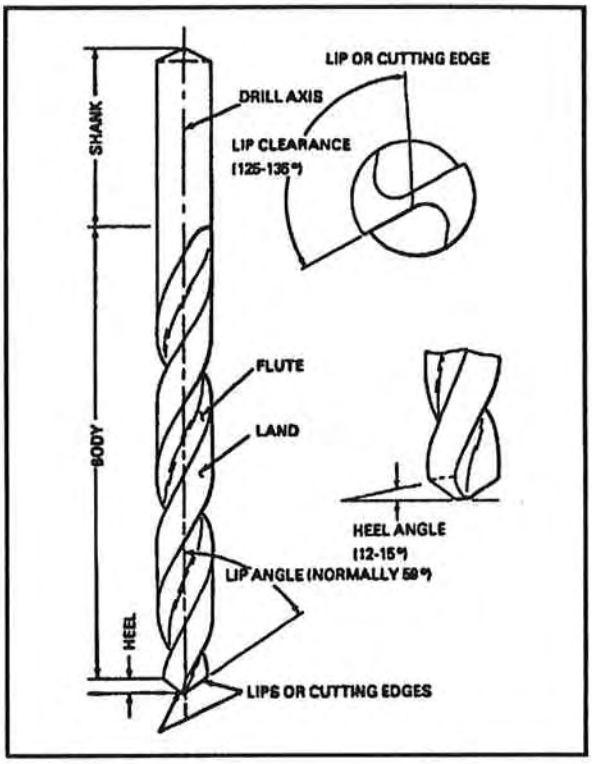

Figure 3-44. Twist drill and parts

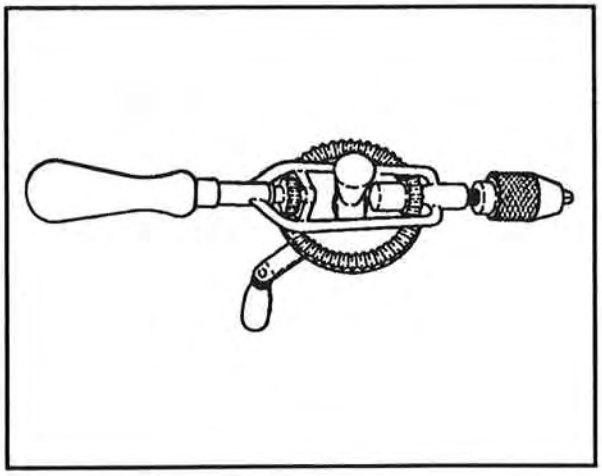

Figure 3-45. Hand drill

Drilling Procedures

When drilling a hole, first locate the exact center of the hole to be drilled. Then use a center punch to make an indentation deep enough to receive the tip of the drill. Be careful not to dimple the material by striking the center punch too hard. Fasten the work securely, insert the tip of the drill into the indentation

Downloaded from http://www.everyspec.com

made by the center punch, and begin drilling. Be sure to keep the drill at right angles to the surface of the work. Ease off pressure on the drill the moment it breaks through to the other side, but continue drilling until the hole is finished.

> NOTE: For most drilling done by airframe repairers, a cutting angle of 118° (59° on either side of the center) for the twist drill will be enough. However, a cutting angle of 90° may be more efficient when cutting soft metals.

Twist Drill Sizes

Sizes are expressed in numbers, letters, and fractions (see Table 3-1). Numbered sizes run from 1 through 80 in decreasing order. Number 1 is the largest size; 80 is the smallest. Letter sizes range from A (the next larger size after 1) through Z in increasing order, with A as the largest of these sizes. Fractional sizes run parallel to number and letter sizes from 1/64 to 1/2. The smallest fractional size (1/64) falls between 79 and 78; the largest fractional size (1/2) is several sizes larger than Z. Larger fractional sizes are available. Letter and number sizes between all of these sizes are also available. The size is stamped on the shank of the twist drill.

Sharpening Twist Drills

Sharpen a twist drill as soon as it shows signs of dullness. The following steps describe the normal procedure for sharpening twist drills:

Table 3-1. Twist drill sizes

Size	Decimal equivalent	Size	Decimal equivalent	Size	Decimal equivalent	Size	Decimal equivalent
½	0.5000	G	0.2610	23	0.1540	1/16	0.0625
31/64	0.4844	F	0.2570	24	0.1520	53	0.0595
15/32	0.4687	E-¼	0.2500	25	0.1495	54	0.0550
29/64	0.4531	D	0.2460	26	0.1470	55	0.0520
7/16	0.4375	C	0.2420	27	0.1440	3/64	0.0469
27/64	0.4219	B	0.2380	9/64	0.1406	56	0.0465
Z	0.4130	13/64	0.2344	28	0.1405	57	0.0430
13/32	0.4062	A	0.2340	29	0.1360	58	0.0420
Y	0.4040	1	0.2280	30	0.1285	59	0.0410
X	0.3970	2	0.2210	⅛	0.1250	60	0.0400
25/64	0.3906	7/32	0.2187	31	0.1200	61	0.0390
W	0.3860	3	0.2130	32	0.1160	62	0.0380
V	0.3770	4	0.2090	33	0.1130	63	0.0370
⅜	0.3750	5	0.2055	34	0.1110	64	0.0360
U	0.3680	6	0.2040	35	0.1100	65	0.0350
23/64	0.3594	13/64	0.2031	7/64	0.1094	66	0.0330
T	0.3580	7	0.2010	36	0.1065	67	0.0320
S	0.3480	8	0.1990	37	0.1040	1/32	0.0312
11/32	0.3437	9	0.1960	38	0.1015	68	0.0310
R	0.3390	10	0.1935	39	0.0995	69	0.0292
Q	0.3320	11	0.1910	40	0.0980	70	0.0280
21/64	0.3281	12	0.1890	41	0.0960	71	0.0260
P	0.3230	3/16	0.1875	3/32	0.0937	72	0.0250
O	0.3160	13	0.1850	42	0.0935	73	0.0240
5/16	0.3125	14	0.1820	43	0.0890	74	0.0225
N	0.3020	15	0.1800	44	0.0860	75	0.0210
19/64	0.2969	16	0.1770	45	0.0820	76	0.0200
M	0.2950	17	0.1730	46	0.0810	77	0.0180
L	0.2900	11/64	0.1719	47	0.0785	78	0.0160
9/32	0.2812	18	0.1695	5/64	0.0781	1/64	0.0156
K	0.2810	19	0.1660	48	0.0760	79	0.0145
J	0.2770	20	0.1610	49	0.0730	80	0.0135
I	0.2720	21	0.1590	50	0.0700		
H	0.2660	22	0.1570	51	0.0670		
17/64	0.2656	5/32	0.1562	52	0.0635		

Downloaded from http://www.everyspec.com

- Adjust the tool rest of a grinder to a height convenient for resting the back of the hand; then turn on the grinder.

> **WARNING**
>
> **Always wear goggles when using a grinding wheel to protect against the risk of being blinded.**

- Hold the twist drill between the thumb and index finger of either the right or the left hand. Grasp the body of the twist drill near the shank with the other hand. (See Figure 3-46[A].)
- Place the hand on the tool rest with the centerline of the twist drill, creating a 59° angle with the cutting face of the grinding wheel. Lower the shank end of the twist drill slightly. (See Figure 4-46[A], [B], [C].)
- Slide the cutting edge of the twist drill slowly against the grinding wheel. Gradually lower the twist drill shank and at the same time turn the twist drill clockwise Maintain pressure against the grinding surface of the wheel only until the heel of the twist drill is reached.
- Check the results of grinding by using a gage to determine whether or not both lips are the same length and at a 59° angle. (See Figure 3-46[D].)

NOTE: The heel angle of the twist drill should be 12° to 15° as shown in Figure 3-46(E). An insufficient heel angle will make the drill ineffective.

Reamers

Reamers are tools used to smooth and enlarge holes to the exact size desired (Figure 3-47). Hand reamers, also called bottoming reamers, have shanks with squared ends so they can be turned with a tap

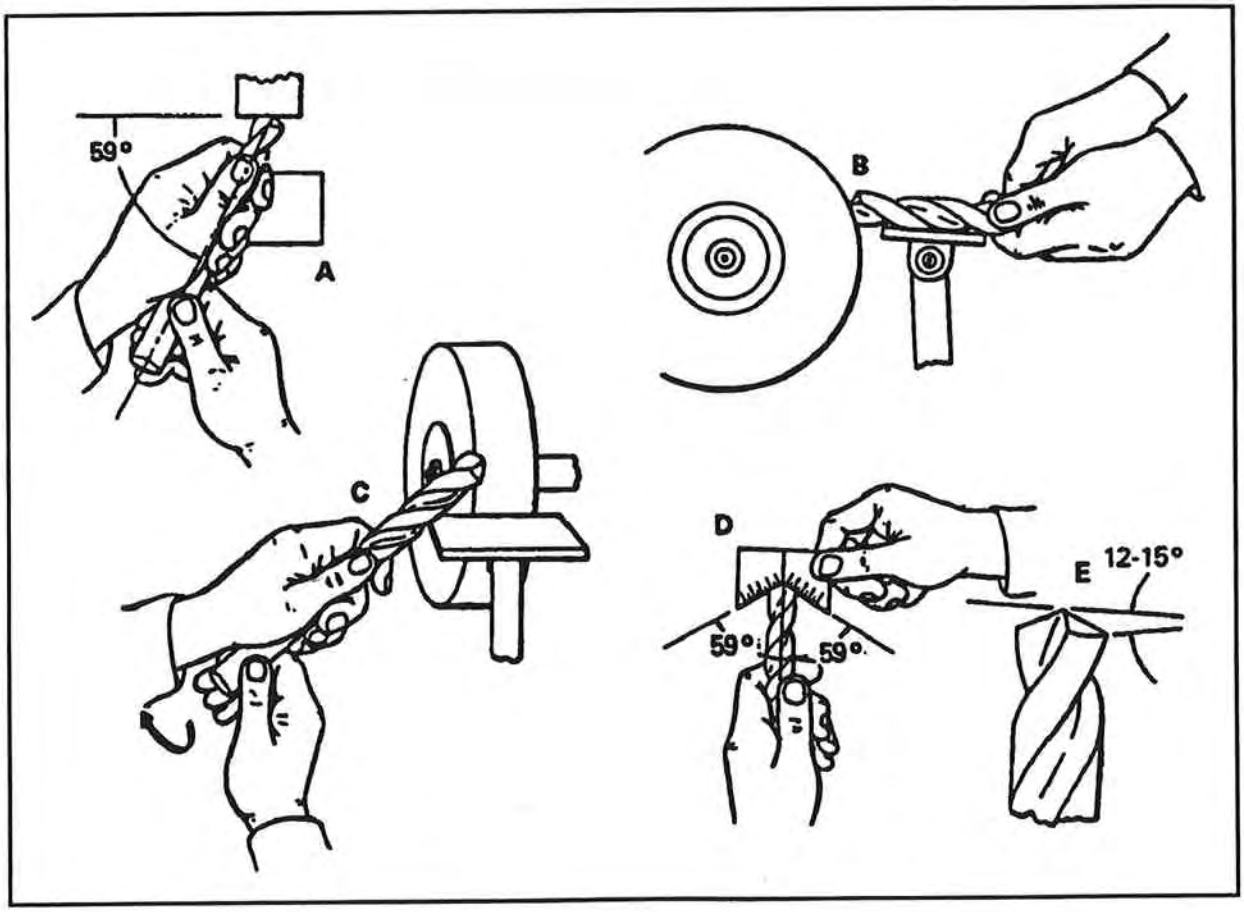

Figure 3-46. Drill sharpening guide

Downloaded from http://www.everyspec.com

wrench or similar tool. A hole that is to be reamed to exact size must be drilled to a size about 0.003 to 0.007 inch smaller than the reamer. A cut that removes more than 0.007 inch puts too much stress on the reamer and should not be attempted. Reamers are made of either carbon tool steel or high-speed alloy steel. Reamer blades are hardened to the point of brittleness. Handle them carefully to avoid chipping. When reaming a hole, rotate the reamer in the cutting direction only. Turn it at a steady, even rate to prevent chattering or scratching and scoring the hole walls. Bottoming reamers should not be used for high-speed reaming because their straight flute design features make them unsuitable for this purpose. Reamers are available in all standard sizes.

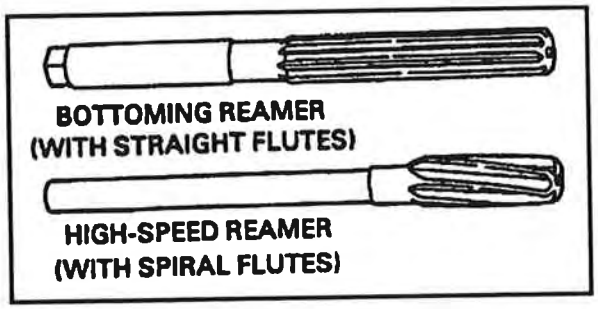

Figure 3-47. Reamers

Countersinks and Counterbores

Countersinks and counterbores are used to enlarge a portion of a drilled hole (Figures 3-48, 3-49). There are two varieties of countersinks: standard and stop countersinks. Countersinks enlarge the drilled hole in a tapered fashion. With the standard countersink the individual user determines the depth of the hole. The stop countersink can only go as far as a preset depth. Counterbores enlarge the drilled hole to a desired depth in a nontapered fashion (straight). Stop countersinks and counterbores use a pilot to keep the center true.

Files

Files are used by airframe repairers to square ends, remove burrs and slivers from metal, file rounded corners, straighten uneven edges, file holes and slots, and smooth rough edges. Most files are made of high-grade tool steels that have been hardened and tempered. They are identified according to their cross section, general shape, or particular use. Files have three distinguishing features: length (not including tang), type or name (refers to the relative coarseness of their teeth), and cut (Figure 3-50). Although files come in many shapes and sizes, they usually come in two types of cut: single-cut and double-cut. The cut of a file must be considered when determining its fitness for different tasks and materials. Single-cut files have one row of teeth extending across the face at an angle of 65° to 85° to the length of the file. Double-cut files have two rows of teeth crossing each other. With both types the depth of the cuts made depends on the coarseness of the file. Single-cut files produce a smoother finish. When excess amounts of material must be removed from edges, use double-cut files. When using a double-cut file, the angle of the first row of teeth is 40° to 45°. The first row is generally called overcut, and the second row, upcut. The upcut is somewhat finer and not as deep as the overcut.

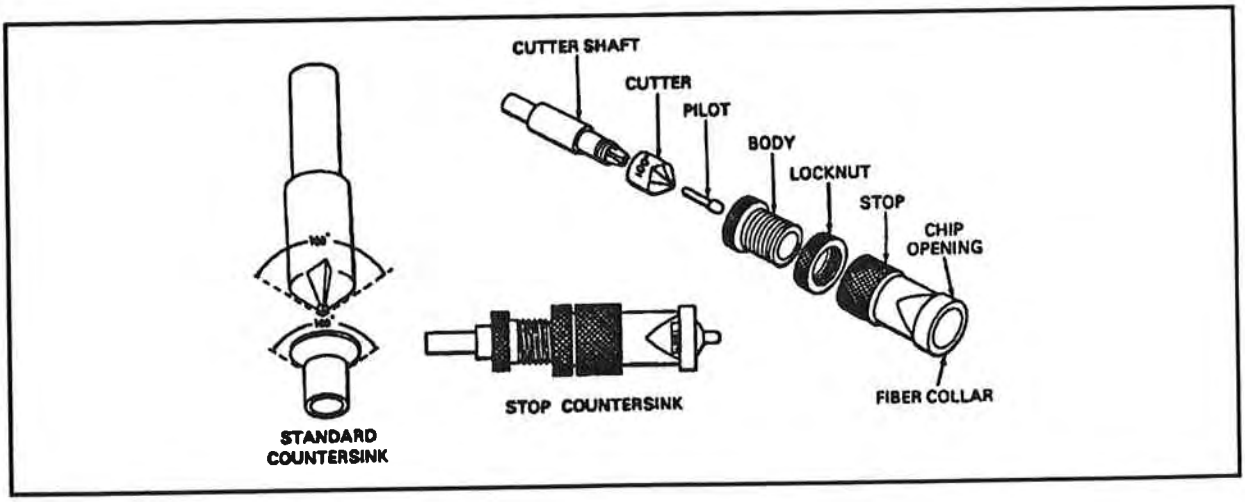

Figure 3-48. Countersinks

Downloaded from http://www.everyspec.com

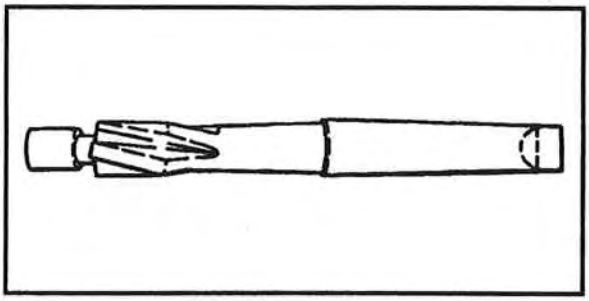

Figure 3-49. Counterbores

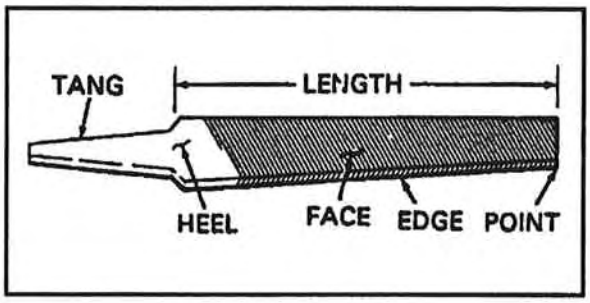

Figure 3-50. File

Files most commonly used by airframe repairers are the following:

- Hand files—chiefly used for finishing flat and flanged surfaces. These files are double-cut, parallel in width, and tapered in thickness. They have one smooth edge, which allows them to be used in corners and in other work where a smooth edge is required.
- Flat files—the most widely used type of file (Figure 3-51). They are used for the same type of work as hand files. Flat files are made either with double-cut or single-cut sides; both varieties have single-cut edges, which allows them to cut on both edges and sides. They are slightly tapered toward the point.

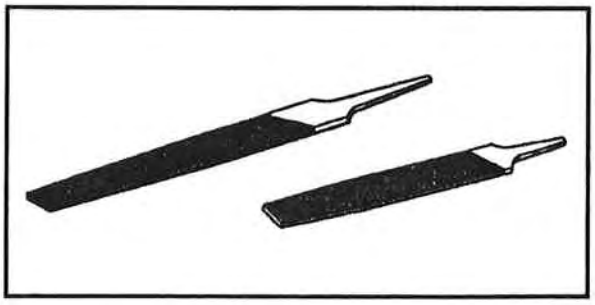

Figure 3-51. Flat files

- Mill files—used for draw filing and, in some cases, for filing soft metals. Their teeth are usually single-cut. These files are generally tapered slightly in thickness and width for about one-third of their length.
- Square files—mainly used for filing slots and key seats and for filing surfaces (Figure 3-52). They may be either tapered or blunt and are double-cut.

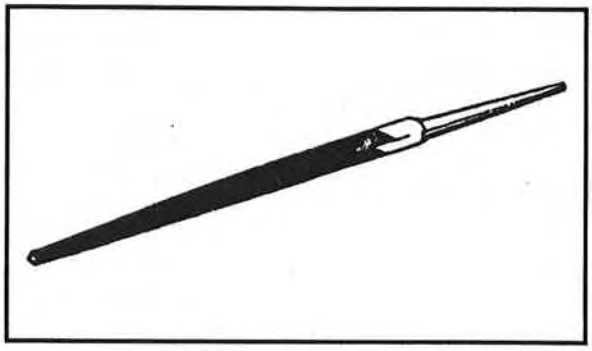

Figure 3-52. Square file

- Round, or rattail, files—mainly used for filing circular openings or concave surfaces (Figure 3-53). They are circular in cross section and may be either tapered or blunt, single-cut or double-cut.

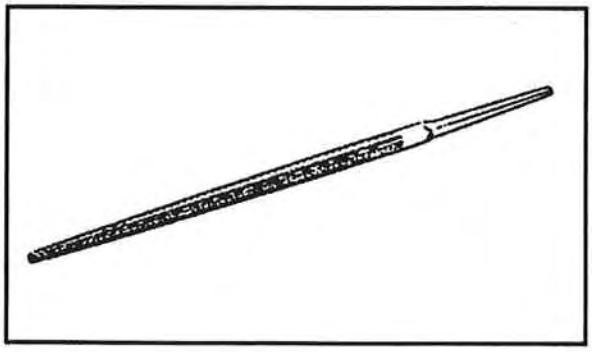

Figure 3-53. Round, or rattail, file

- Triangular files—used for filing the gullet between saw teeth. They are triangular in cross section and single-cut.
- Three-square files—used for filing internal angles, clearing out corners, and filing taps and cutters. They are triangular in cross section (like triangular files) and are double-cut.

Downloaded from http://www.everyspec.com

- Half-round files – shaped so that they can be used in places where other types of files would be ineffective (Figure 3-54). They cut on both flat and round sides and can be either single-cut or double-cut.
- Lead float files – specially designed for use on soft metals. They are single-cut and come in various lengths.

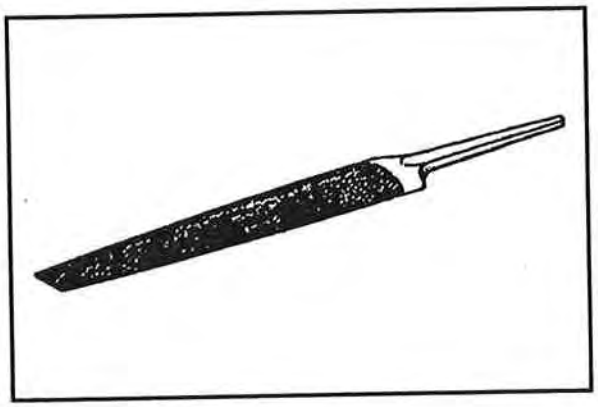

Figure 3-54. Half-round file

Procedures

The procedures recommended here apply either generally or to specific filing tasks.

> NOTE: Before attempting to use a file, make sure the tang is inserted in a handle to ensure proper guiding and safe use.

Cross Filing. Cross filing is moving the file endwise across the work. To do this, grasp the handle so that its end fits against the palm of one hand, with the thumb lying lengthwise across the top of the handle. With the other hand, grasp the end of the file between the thumb and the first two fingers. To prevent undue wear, lighten the pressure during the return stroke. Hold narrow work surfaces near the vise jaws to prevent vibration. If a surface is straight, place it parallel to the top of the vise.

Draw Filing. Drawing filing is grasping the file at each end crosswise to the work and then moving it lengthwise with the work. When done properly, draw filing gives a somewhat finer finish than cross filing with the same file. In draw filing, the teeth of the file produce a shearing effect, which depends on the angle the file is held at in relation to its line of movement and on the angle the teeth are cut at. Pressure should not be great; it can remain the same on the backstroke as on the draw stroke.

Rounding Corners. The method used for filing a rounded surface depends on its width and radius. If the surface is narrow or if only one part of it is to be rounded, start the forward stroke of the file with its point inclined downward at a 45° angle. Use a rocking chair motion to finish off the stroke with the heel of the file near the rounded surface. This method allows you to use the full length of the file.

Removing Burrs or Slivers. Almost all cutting operations on sheet metal produce burrs and slivers. These can cause personal injury and scratching and marring of parts. They can also prevent parts from fitting properly. Always remove burrs and slivers from holes and edges after each cutting operation.

Care and Cleaning

Although files are the simplest cutting tools commonly used by airframe repairers, they are unfortunately the ones most often misused and improperly cared for. During the filing process particles of metal collect between the teeth that can cause deep scratches on the metal surface. When these particles are so firmly lodged between the teeth that they cannot be removed by tapping the edge of the file, remove them with a file-cleaner brush or wire (card) brush (Figure 3-55). Draw the brush across the file so that its bristles pass the gullet longitudinally between the teeth..

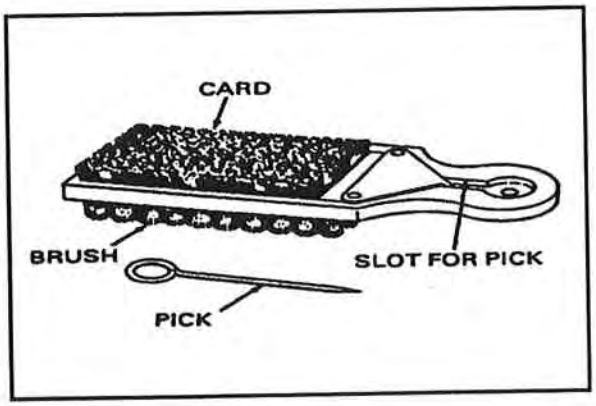

Figure 3-55. File-cleaner brush

Chisels

A chisel is used for shearing off rivets, smoothing castings, or splitting nuts from bolts. Chisels are handy for work in limited spaces. They are usually made of eight-sided tool-steel bar stock that has been carefully hardened and tempered. Chisels come in several shapes, such as the flat-cold and

Downloaded from http://www.everyspec.com

single-bevel-point types (Figure 3-56). The cutting edge of a chisel is slightly convex; it will cut any metal softer than itself. A chisel is designed so that the center absorbs the shock while it cuts, which protects its weaker corners. For general uses, such as cutting wire, straps, bars, and rods, the chisel point should be manufactured at an angle of 60° to 70°. Which chisel to use and how is determined by the design of the cutting edge and the kind of work involved. The single-bevel-point chisel is preferable for cutting rivets and small bolts. Its design allows the cutting edge to align with the aircraft's structure. When using a chisel to remove rivet heads, it is important to have a straight shear close to the aircraft structure to prevent damage.

Hacksaws

The common, or hand-held saw, is used to cut thinner metals. It has a blade, a frame, and a handle. The handle can have either a pistol or a straight grip (Figure 3-57). The frame is designed to hold the blade at each end with pins. An adjusting screw on one end of the frame applies lock and tension on the blade and holds it firmly in place. The blade should be installed in the hacksaw frame with teeth pointing forward, away from the handle.

Blades

Hacksaw blades are made of high-grade tool steel or tungsten. They are available in sizes ranging from 6 to 16 inches; the 10-inch size is the most commonly used. There are two types of blade: all-hard and flexible. In flexible blades only the teeth are hardened. An all-hard blade is best for sawing brass, tool steel, cast iron, and heavy cross-section materials. A flexible blade is usually best for sawing hollow shapes and metals with a thin cross section. Selecting the best blade for a particular job involves choosing not only the right type but the right pitch as well. The pitch of a blade is determined by the number of teeth per inch. Pitches of 14, 18, 24, and 32 teeth per inch are available. A blade with a pitch of 14 teeth is preferable for cutting machined cold-rolled or structural steel. A blade with a pitch of 18 teeth is preferable for cutting solid-stock aluminum, bearing metal, tool steel, and cast iron. A blade with a pitch of 24 teeth should be used when cutting thick-walled tubing pipe, brass, copper, and channel and angle iron. A blade with a pitch of 32 teeth should be applied for cutting thin-walled tubing and sheet metal.

Procedures

Follow these procedures when using a hacksaw:

- Select a suitable blade for the job.
- Install the blade in the frame correctly.
- Adjust the blade tension in the frame to prevent the saw from buckling and drifting.
- Clamp the work in a vise to provide as much bearing surface and engage as many teeth as possible.

NOTE: Use soft, removable jaw covers on the vise to prevent marring a finished surface. To prevent work from springing, position it so that the saw will not cut more than 1/4 inch away from the vise jaws.

- Mark the starting point by nicking the surface with the edge of a file to remove any sharp corner that might strip the teeth. This mark will also help to start the saw at the right place.
- Hold the saw at an angle that will keep at least two teeth in contact with the work at all times. Start the cut with a light, steady, forward stroke just outside the cutting line. Remember to make the primary cut on the forward

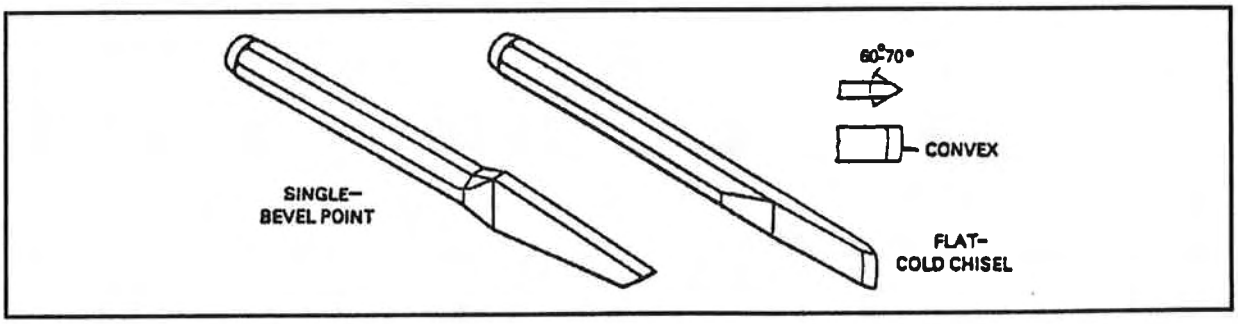

Figure 3-56. Chisels

Downloaded from http://www.everyspec.com

stroke. At the end of the stroke, lighten the pressure and draw the saw blade back.

- After the first few strokes lengthen each stroke to make it as long as the hacksaw frame will allow. This will prevent the blade from overheating. Apply just enough pressure on the forward stroke to make each tooth remove a small amount of metal. Strokes should be long and steady, at a rate of not more than 40 to 50 strokes per minute.
- After completing the cutting operation, remove any chips from the blade. Loosen frame adjustment saw and remove blade. Return hacksaw to its proper place.

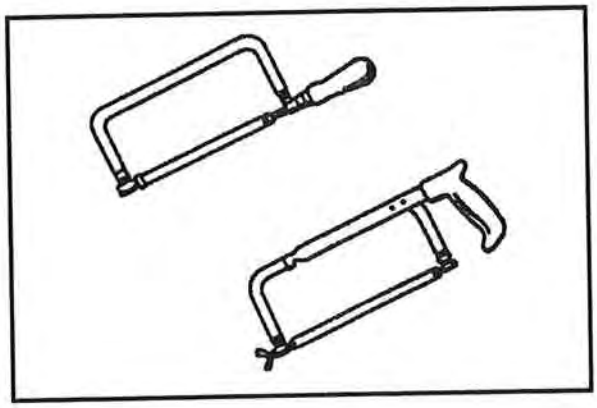

Figure 3-57. Hacksaws

PUNCHES

Punches are used to cut metal, locate centers, start points for drilling, punch holes, transfer hole locations with patterns, and remove rivets, bolts, or pins. Usually made of carbon steel, they are tempered at both ends. Punches are classified according to their use and the design of their points. The two main types of punches used by airframe repairers are the hollow punch and the solid punch (six varieties).

Hollow Punch

Hollow punches are used to cut holes in thin, soft metal (Figure 3-58). The hollow punch point is designed for that purpose; the rim of the point is sized to fit the diameter of the desired hole. The point is hollow with a thin wall (the cutting edge). Inscribe a circle around a center mark as required for the hole and select a hollow punch of the same size as the hole. To cut out the inscribed hole, give the top of the punch a sharp tap.

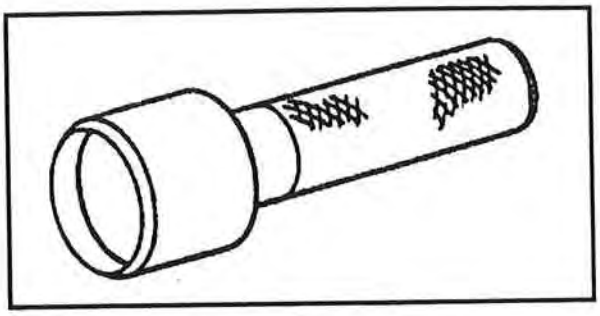

Figure 3-58. Hollow punch

Solid Punch

Solid punches are classified according to point shape and are designed for various purposes (Figure 3-59). The following are the most commonly used types.

Prick punches are used to place reference marks on metal. They are also often used to transfer dimensions from a paper pattern directly onto metal. To do this, first place the paper pattern directly on the metal. Then trace the outline of the pattern with the prick punch, tapping it lightly with a small hammer to make slight indentations on the metal at the corner points on the drawing. Then use these indentations as reference marks for cutting or folding the metal.

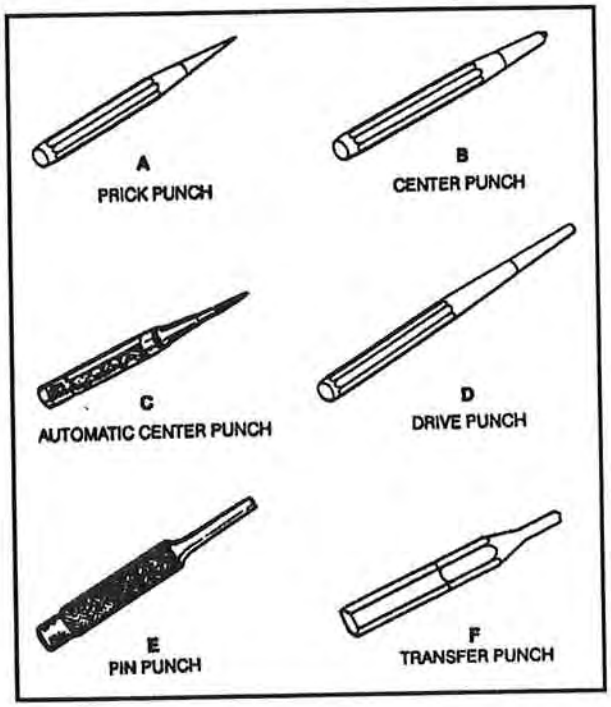

Figure 3-59. Punches

Downloaded from http://www.everyspec.com

CAUTION

1. Never strike a prick punch a heavy blow with the hammer because this could bend the punch or cause excessive damage to the material being worked.

2. Do not use a prick punch to remove objects from holes because the point of the punch will spread the object and cause it to bind even more.

Center punches are used to make large indentations in metal of the kind needed to start a twist drill. This punch has a heavier body than the prick punch and its point is ground to an angle of about 60°.

CAUTION

1. Never strike the center punch with enough force to dimple the material around the indentation or cause the metal to protrude through the other side of the sheet.

2. As with the prick punch and for the same reason, never use a center punch to remove objects from holes.

Automatic center punches are used only to indent metal to make starting points for twist drills. This punch contains an inside mechanism that automatically strikes a blow of the required force when placed exactly where the user wants it and pushed by pressing on it with the hand. The punch has an adjustable cap for regulating the stroke; the point can be removed for regrading or replacement.

CAUTION

Never strike an automatic center punch with a hammer.

Drive punches, often called tapered punches, are used to drive out damaged rivets, pins, and bolts, which sometimes bind in holes. Therefore, the drive punch is made with a flat face instead of a point. The size of the punch is determined by the width of the face, usually 1/8 to 1/4 inch.

Pin punches, often called drift punches, are similar to drive punches and are used for the same purposes. The difference between the two is that the shank of a drive punch is tapered all the way to the face while the pin punch has a straight shank. Pin punch points are sized in thirty-seconds of an inch and range from 1/16 to 3/8 inch in diameter. The usual method for driving out a pin or bolt is to start working it out with a drive punch, which is used until the shank of the punch is touching the sides of the hole. A pin punch is then used to drive the pin or bolt the rest of the way out of the hole. Pins and bolts or rivets that are hard to dislodge may be started by placing a thin piece of scrap copper, brass, or aluminum directly against the pin and then striking it with a heavy hammer until it begins to move.

Transfer punches are used to transfer holes through a template or patterns to the material. This punch is usually about 4 inches long. Its point is tapered at the back and then turns straight for a short distance to fit the drill-locating hole in a template. The tip ends in a point like that of a prick punch.

SCREWDRIVERS

Screwdrivers are used to loosen or tighten screws or screwhead bolts. A screwdriver has three parts: the handle, the shank, and the blade. These parts are usually sized in proportion to the screwdriver's overall length. The actual length of a screwdriver is measured from the tip of the blade to the end of the shank, exclusive of the handle. It is very important to select a screwdriver with the correct length and blade size to fit the screw or bolt being installed or removed. The blade must not be too thick or too thin. There are five kinds of screwdriver: standard, Phillips, Reed and Prince, offset, and ratchet (Figure 3-60).

Standard

Standard screwdrivers are the most widely used type. Most are from 3 to 12 inches long, but they also come in shorter and greater lengths. A screwdriver should be the right size with a blade just thick (or thin) enough to fit the slot of the screw or bolt exactly.

Phillips

Phillips screwdrivers are made with a specially shaped blade that fits Phillips cross-slot screws. The heads of these screws have a four-way cross slot that prevents the screwdriver from slipping. The three sizes of Phillips screwdrivers can handle a wide range

Downloaded from http://www.everyspec.com

of screw sizes. A standard screwdriver should not be used on Phillips-head screws.

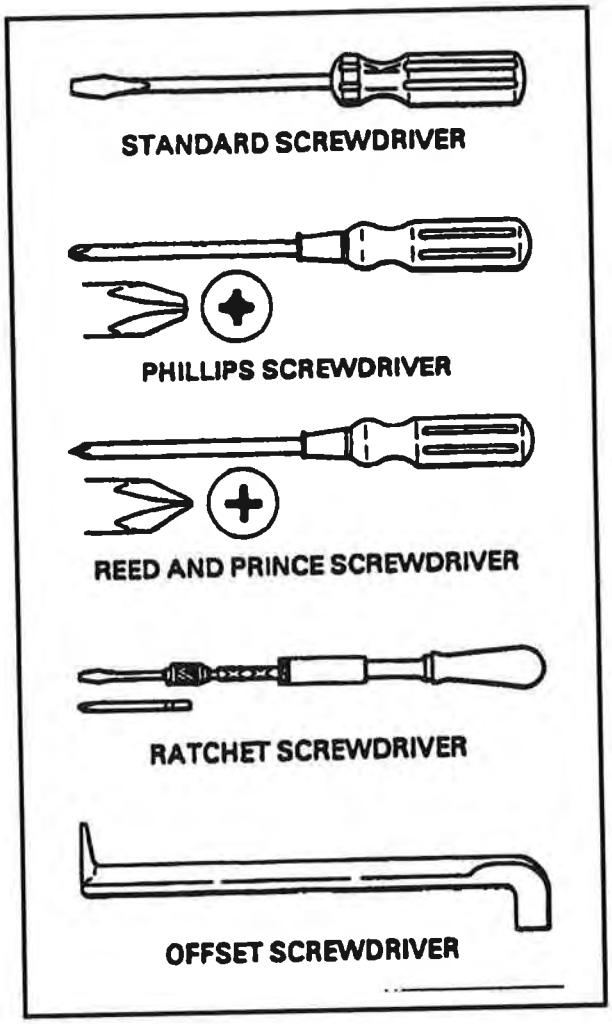

Figure 3-60 Screwdrivers

Reed and Prince

Reed and Prince screwdrivers are similar to Phillips screwdrivers except that they have a different tip. The tip is made to fit a four-way screwhead slot that is somewhat different from the Phillips screwhead slot. This screwdriver comes in sizes from 3 to 8 inches.

Offset

Offset screwdrivers are designed for use in small spaces where an ordinary screwdriver would not fit. They are rather awkward to handle because it is hard to maintain enough pressure to prevent them from slipping. Blades at either end are set at right angles to the body and to each other. This enables the user to turn a screw a quarter turn at one end, then change ends and make a quarter turn at the other end.

CAUTION

Never use a screwdriver as a pry bar or chisel.

Ratchet

Sometimes called the spiral screwdriver, the ratchet type is a fast-acting tool that turns a screw when its handle is pushed down and then springs up. It can be set to turn the screw either clockwise or counterclockwise. Or it can be locked in position and used as a regular screwdriver. Blades of various sizes fit into the chuck. The ratchet screwdriver is not a heavy-duty tool. Use it only for light work.

Section II. Special Tools and Devices

BENCH PLATES

Bench plates (Figure 3-61) are flat pieces of metal used with stakes to hold work firmly in place as, for example, when leveling, turning, or machining.

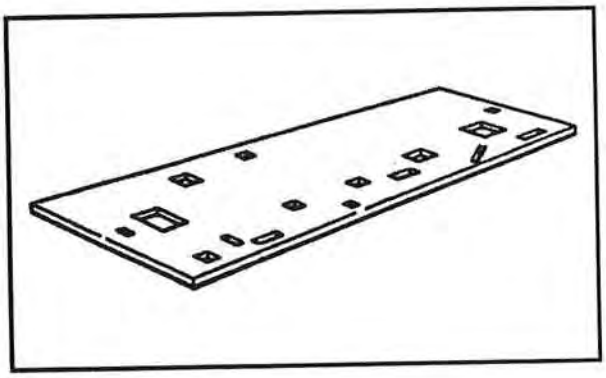

Figure 3-61. Bench plate

STAKES

Stakes are special kinds of dolly blocks. They come in various finished shapes and are used with a bench plate in different metal-forming and supporting operations. Most stakes have machined, polished, and hardened surfaces. Stakes should not be used to back up material when using a chisel or any similar cutting tool; this will mar surfaces and make them useless for finishing work. Airframe repairers use the following types of stakes:

Downloaded from http://www.everyspec.com

- Square. Three varieties of square stakes are used for general sheet-metal-forming work: common, bevel-edge, and coppersmith (Figure 3-62). The common square stake is squared off on all ends. The bevel-edge stake is offset to allow more varied applications. The coppersmith stake has three square sides and one rounded side. Square stakes are the most commonly used stakes in aircraft structural repair shops.

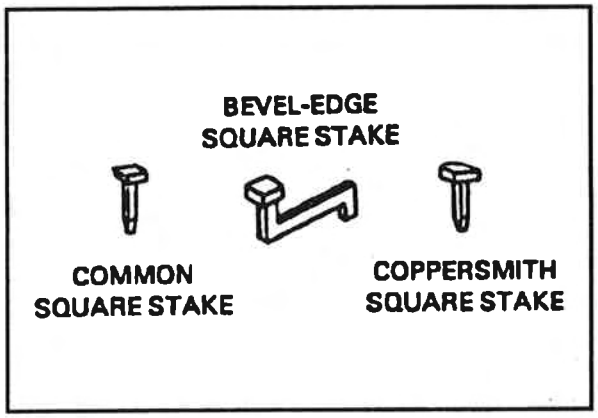

Figure 3-62. Square stakes

- Double-seaming. There are two varieties of the double-seaming type:
  - Simple double-seaming—used as a support when laying down double seams on small cylindrical objects. This stake has two horns with elongated heads.
  - Four-head double-seaming—suitable for all kinds of riveting and for double-seaming large objects. It has two shanks and four interchangeable heads, allowing it to be used in several different positions and conditions.
- Roundhead. This stake has a curved head that makes it suitable for forming objects of curved and irregular shape. It is not used extensively.
- Bottom. This stake is used for dressing down an object with a burred or flanged circular bottom. It has a flared end.
- Needle-case. This stake has a round, tapered horn on which small rings and tubular objects can be formed and a heavier rectangular horn on which square work can be formed.
- Conductor. This stake is used for forming, seaming, and riveting pipes and elbows, especially those with small diameters. It has two cylindrical horns of different diameters.
- Candle-mold. This stake has a horn of rather large diameter on one end for general-purpose use and a long, tapered horn on the other end for reshaping and tube forming.
- Hatchet. This stake is used for making straight bends, for folding and bending edges, and for flanging and dovetailing. This stake has a beveled horizontal bar.
- Creasing. This stake has a tapered horn on one end for shaping conical objects and a creased mandrel on the other end that permits bending, wiring, and turning.
- Beakhorn. This stake has a round, tapered horn on one end and a square, tapered horn on the other, which makes it suitable for general sheet metalwork and shaping, and for riveting round and square objects.
- Blow-horn. This stake has a tapered end, called an apron, used for shaping objects that taper abruptly, such as funnels. The other end of the stake is round with a long, narrow taper for forming slightly tapered objects. This taper can also be used to form metal or wire into rings with small diameters.
- Solid mandrel. This stake is generally used for riveting, forming, and seaming square or rectangular material. These stakes are available in 30-, 34 1/2-, and 40-inch lengths; each stake has a double shank on one end.
- Hollow mandrel. This stake has a square section at one end and a rounded mandrel on the other, which makes it suitable for leveling, forming, and seaming. It also has a large bolt inside a slot on the lower slide; this allows the stake to slide and enables it to be fastened securely on the bench in any desired position. The hollow mandrel stake comes in overall lengths from 40 to 60 inches.

Section III. Sheet Metal Shop Equipment

NONPOWERED METAL-CUTTING MACHINES

Nonpowered metal-cutting machines are designed to help airframe repairers complete heavy difficult work. Those machines are operated by hand levers

Downloaded from http://www.everyspec.com

or by a foot-operated treadle. They include three varieties of shears and the rotary punch

Squaring Shears

Squaring shears (Figure 3-63) provide convenient means of cutting and squaring metal. They consist of a stationary lower blade attached to a bed and a movable or cutting blade attached to a crosshead. A spring is attached to the foot treadle and to the cutting blade. The bed has an inscribed scale graduated in fractions of an inch. Two squaring fences made of thick strips of metal are attached to the shears. Each fence fits at a 90° angle to the blades. Squaring fences are used to align and square the metal sheets before cutting. To make a cut, place the metal sheet on the bed as required. Set the shear in motion by placing your foot on the treadle and pressing down. When pressure is removed, the spring raises the cutting blade and foot treadle.

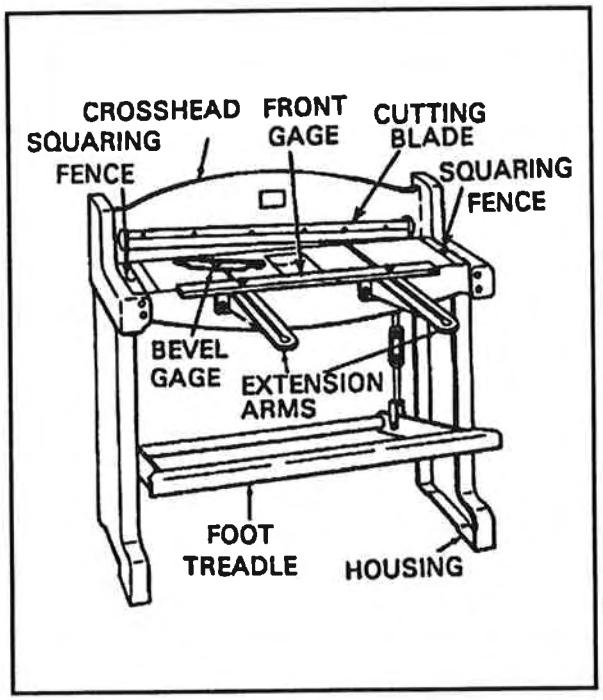

Figure 3-63. Squaring shears

Foot-operated squaring shears will normally cut mild carbon steel up to 22 gage. Cutting capacity is usually indicated on the shears. Three quite different operations can be performed with squaring shears: cutting to a line, squaring, and multiple cutting to specific sizes. The following procedures apply in each of these operations.

Cutting to a Line

To cut to a line, place the sheet metal on the bed of the shears with the cutting line directly even with the cutting edge of the bed. Hold the sheet securely in place and press down on the foot treadle to bring down the cutting blade. Apply full pressure on the treadle to ensure that the cutting blade will follow it and make a complete cutting stroke.

Squaring

The first step in squaring is to square one edge with the fence. Then square the remaining edges by holding one squared end of the sheet against the squaring fence and make the cut, one end at a time, until all the ends have been squared.

Multiple Cutting to Specific Sizes

To make multiple cuts to specific sizes of several pieces of sheet metal, use the front gage on the extension arms of the shears, which are graduated in fractions of an inch. The front gage can be set at any point on the extension arms. Set it at the desired distance from the cutting blade of the shears. Place each sheet to be cut flush with the front gage and make the cut. Each sheet can be cut to the same dimensions without measuring and marking it separately.

Scroll Shears

Scroll shears (Figure 3-64) are used for cutting irregular lines on the inside of a sheet without cutting through to the edge. The upper cutting blade is stationary while the lower blade is movable. The machine is operated by a handle connected to the lower blade.

Throatless Shears

Throatless shears (Figure 3-64) are used to cut 10-gage mild carbon sheet metal and 12-gage stainless steel. Because they have no throat, they can cut freely without obstructions. A sheet of any length can be cut using throatless shears, and the metal can be turned in any direction to allow irregular shapes to be cut. A hand lever operates the cutting (top) blade of these shears.

Rotary Punch

Use the rotary punch (Figure 3-65) to punch holes in metal parts, to cut radii in corners, to make washers, and for other jobs that require holes to be made. It has two cylindrical turrets, one mounted above the

Downloaded from http://www.everyspec.com

other, supported by the frame. Both turrets are sychronized to operate together. Index pins are positioned so that the turrets are correctly aligned at all times. The following procedures apply when operating a rotary punch:

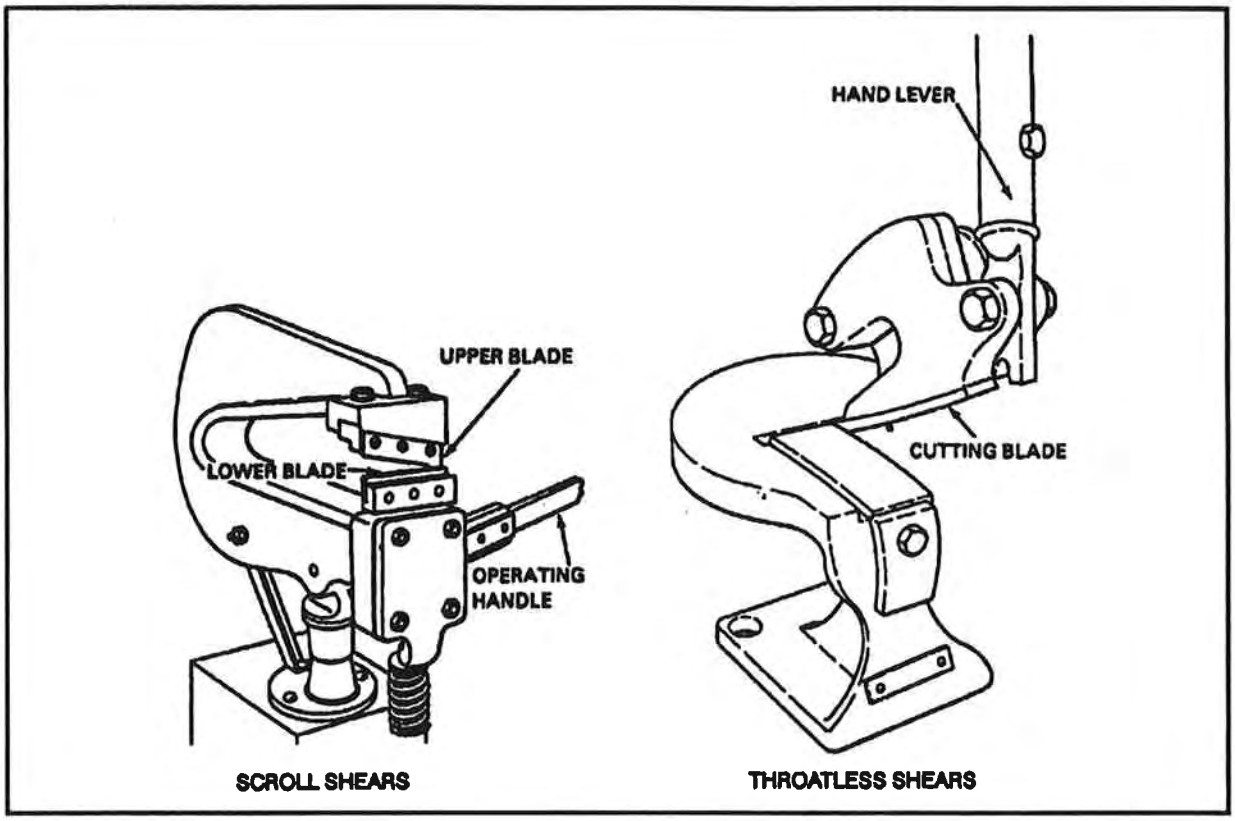

Figure 3-64. Scroll and throatless shears

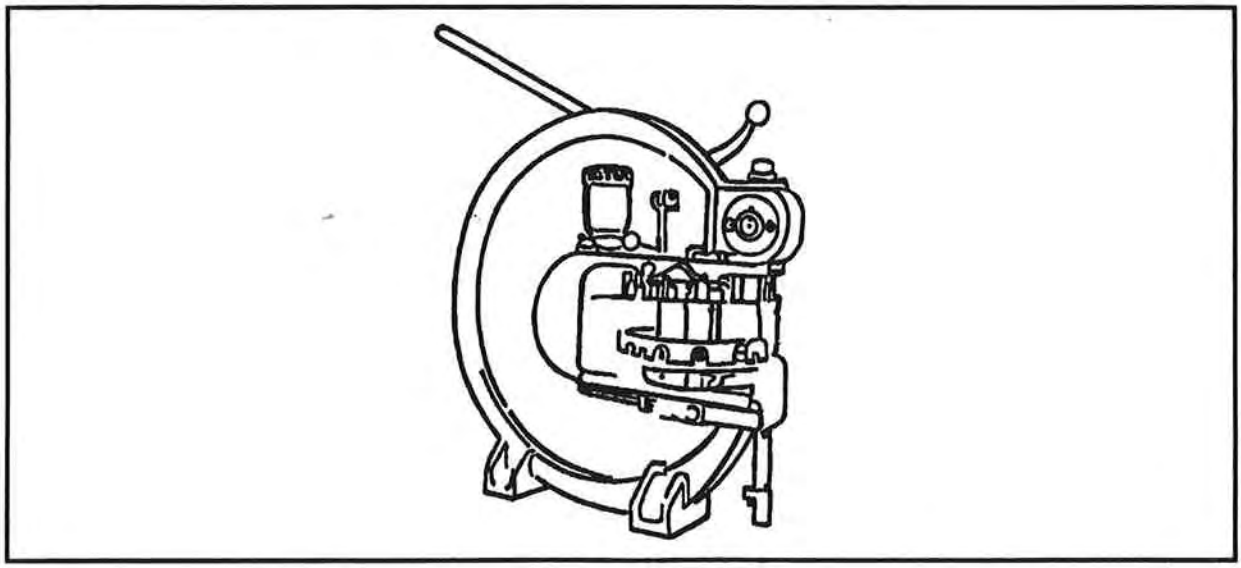

Figure 3-65. Rotary punch (rotex)

Downloaded from http://www.everyspec.com

- Release the index pins from their locked position by rotating the lever at the upper right side of the punch. This withdraws the index pins from the tapered holes and allows the turrets to be turned to any desired punch size.
- As the turrets are being rotated to change the punches, release the index lever when the desired die is within 1 inch of the ram; continue turning the turrets slowly until the top of the punch holder slides into the grooved end of the ram. The index locking pins automatically slide into the holes provided; at the same time, they release the mechanical locking device. This prevents punching from taking place until the turrets are aligned.
- To operate the machine, place the metal to be worked between the die and the punch; then pull the lever on the upper right side of the machine. This will actuate the pinion shaft, the gear segment, the toggle link, and the ream, thereby forcing the punch through the metal. When the lever is returned by the user to its original position, the metal is ready to be removed from the punch.
- The diameter of the punch is stamped on the front of each die holder. Each punch has a point in its center that is placed in the center punch mark to punch the hole in the right spot.

POWERED METAL-CUTTING MACHINES

Power-operated metal-cutting machines (often called power tools or power equipment) used by airframe repairers in preparing sheet metal are sometimes similar to nonpowered types. Due to the speed or pressure of these machines, all required safety precautions should be carefully followed. Airframe repairers who use power tools should be carefully observed to prevent injury to personnel. They should be completely familiar with the particular equipment they are using. The most commonly used power metal-cutting machines are power saws.

Ketts Saw

Ketts saw (Figure 3-66) can be used to cut metal up to 3/16 inch thick. It is also very handy for removing damaged sections on a stringer. This saw is portable, operates on electricity, and makes a circular cut. It can be fitted with blades of various diameters. It does not need a starting hole; a cut can be started anywhere on a sheet of metal with a Ketts saw. It will cut either an inside or an outside radius. To prevent the saw from grabbing, keep a firm grip on the handle at all times.

WARNING

Always check the blade carefully for cracks before installing it. A cracked blade can fly apart, which may cause injury to personnel.

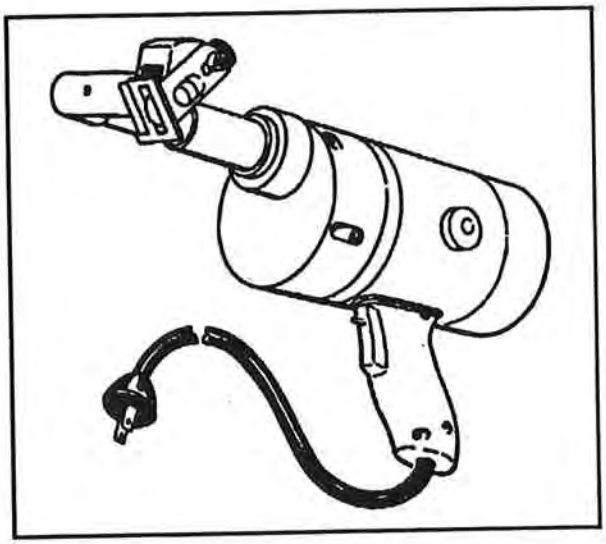

Figure 3-66. Ketts saw

Reciprocating Saw

A reciprocating saw (Figure 3-67) can cut a 360° circular hole or a square or rectangular hole. It is portable, air-powered, and safe. It operates most effectively when air pressure is between 85 and 100 pounds per square inch (psi). This saw's gun-type shape gives it good balance and ease in handling. It has a standard hacksaw-type blade, which should be used so that at least two of its teeth are cutting at all times.

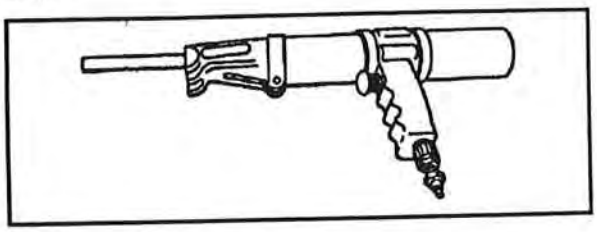

Figure 3-67. Reciprocating saw

Downloaded from http://www.everyspec.com

CAUTION

Do not apply too much downward pressure on the saw handle because this could break the blade.

Power Hacksaw

Use a power hacksaw (Figure 3-68) to cut heavier, harder metal than the hand hacksaw can cut. Its blade cuts the same as the hand hacksaw blade, but its cutting range is much greater. The power hacksaw may have blades of various types and composition; however, high-speed steel, high-speed alloy steel, or molybdenum steel blades are recommended for best results. Power hacksaws are electrically operated.

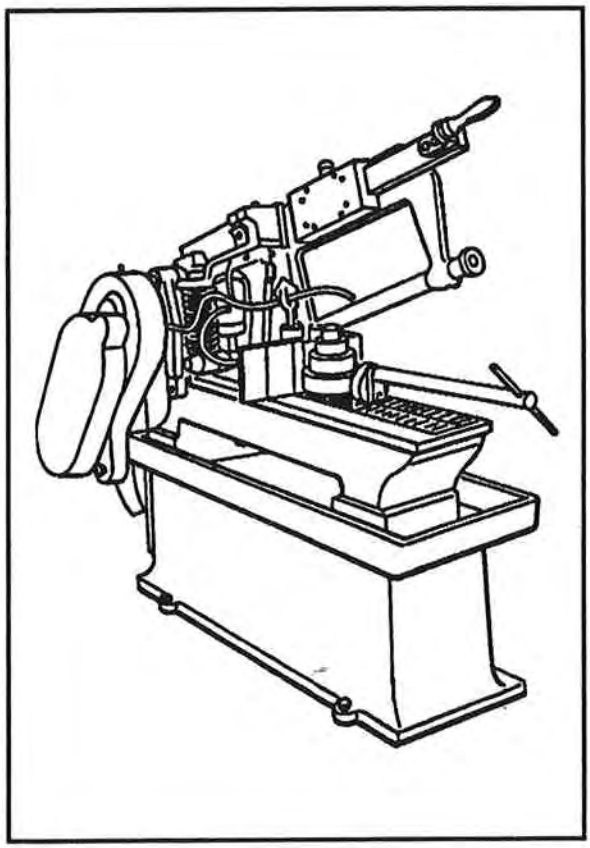

Figure 3-68. Power hacksaw

Contour Band Saw

The contour band saw (Figure 3-69), sometimes called the metal-cutting band saw, is used to make parts, fittings, or pieces of sheet metal. It is used where metal is too heavy to be cut with shears or snips, or where it would take too much time to set up a milling machine or shaper. This saw can also be used to cut a number of similar parts from sheet metal stock.

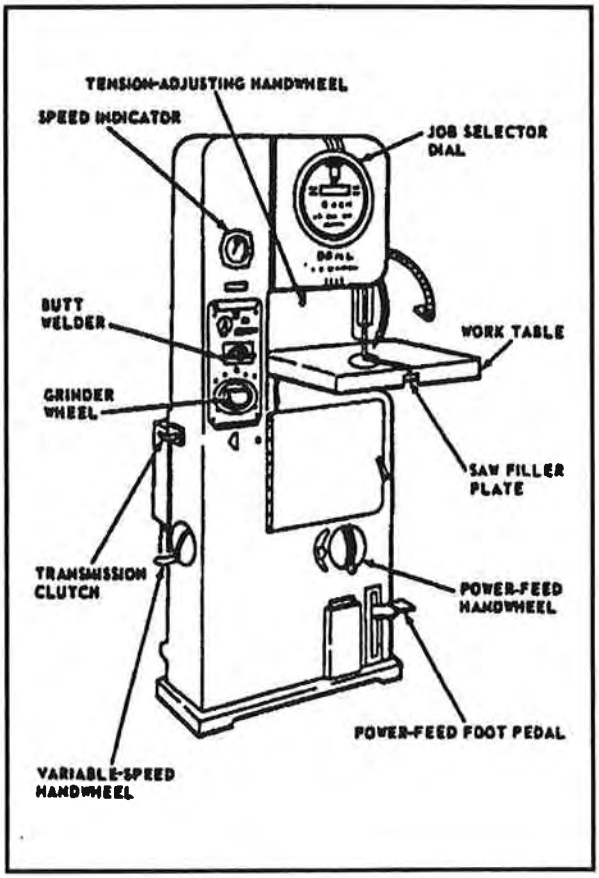

Figure 3-69. Contour band saw

The following points apply when operating a band saw:

- A band saw has several speeds and both hand and automatic feeds. The work table can be adjusted to any desired angle.
- Some band saws are equipped with spot-welding and grinding attachments that allow the saw blade to be set, inserted, and welded without delay when making internal cuts. This equipment can also be used to mend broken blades.
- Continuous file and polishing bands are available as accessories for finishing parts after they have been cut.

Downloaded from http://www.everyspec.com

- A band saw can make multiple cuts to specific sizes by fastening pieces of material together by weld, solder, rivets, or clamps so that they stay in place by marking a cutting guideline path and then following the line path with the blade.

The process of installing or changing a band saw blade is simple; however, certain specific steps are involved. The following procedures apply to installing a blade (steps for changing a blade are almost the same, except that some are done in reverse order).

Blade tension is controlled by a handwheel that mechanically raises or lowers the upper wheel of the band saw. The blade carrier wheels (upper and lower) are behind cover doors that are above and below the work table. The cover doors swing out and to the left when facing the front of the band saw.

If the blade must be butt-welded, grasp each end of it with both hands and make sure that its teeth are pointing down and toward you. Place the ends in the butt-welder slots (above and to the left of the work table). Bring the ends together and lock them in place with the holding screws. Apply current with the arc switch, which is labeled for this purpose. The welding process will be completed instantly. Then loosen the holding screws and remove the blade.

Grasp the right-hand portion of the blade with both hands held about 10 inches apart. Make sure the blade teeth are facing toward you and pointing down. Then work the blade into the slot on the work table. As the blade moves into the slot, tilt it by moving it to the right with your right hand and to the left with your left hand. This allows the blade to move past the trunnion of the work table. After this, bring the blade back to an upright position and move it through the slot to the blade travel opening of the work table. Hold the blade with your right hand and thread its upper portion into the telescoping guide leg, onto the contour of the upper wheel, and finally around the lower wheel.

After making sure the blade is in the correct position, control the blade tension and recheck it to be sure it is seated properly on the upper and lower wheels and the telescoping guide leg. After the proper tension is obtained, adjust (tilt) the upper wheel to provide proper tracking of the blade. Stand to the right of the machine so that your right hand can reach the blade-tracking screw on the center of the wheel and your left hand, the upper wheel and turn it. Observe the blade position on the face of the upper wheel and adjust it with the blade-tracking screw. Place the fingers of your left hand against the surface of the flat wheel near the rim and rotate the wheel slowly clockwise; at the same time, observe the action of the blade. If the blade creeps toward one edge, turn the tracking screw so that it will counteract the tendency to creep. Repeat this procedure until the blade runs in the center of the upper wheel as the wheel is rotated.

The procedure outlined above should be sufficient. However, before using the machine, it is advisable to make a final adjustment of the blade tension and then to recheck the blade tracking. The tracking adjustment is not complete until it is certain that the blade will stay in place when turning at high speeds. Check this by closing the upper and lower cover doors and pressing the START button to start the motor. Once the motor has gained a little speed, press the STOP button and check to see whether the blade is tracking near the center of the upper wheel. Do not allow the motor to accelerate above one-half of the maximum revolutions per minute until you are sure the blade is tracking properly. After the blade is installed and tracking properly, make the necessary guide adjustments before using the machine.

DRILLS AND DRILL PRESSES

Portable power drills and stationary presses are important machine tools in airframe metalwork because drilling holes for rivets and bolts is one of the most common operations performed by airframe repairers. Drilling is not difficult, especially on light metals, if the repairer understands the fundamentals of drills and drill presses and their uses. The small portable power drill is generally the more practical of the two; however, the stationary power drill press is better in certain cases. When drilling hard or heavy-gage metals, use an approved cutting oil.

Portable Power Drills

Some portable power drills are operated by electricity, others by compressed air. Some electrically operated drills run on both alternating and direct current; others will only run on one kind of current. Be sure to check which type of current the drill is designed for before making plug connections. Portable power drills come in various shapes and sizes (Figure 3-70) to satisfy almost any drilling requirement. The chuck will hold the shank of any

Downloaded from http://www.everyspec.com

twist drill up to the size it is designed for. Drills used by airframe repairers carry a chuck with a maximum capacity of 1/4 inch. However, drills are manufactured with chucks of larger capacity. Pneumatic drills are recommended for use near flammable materials because the sparks coming from an electric drill are a fire hazard. The twist drill should be inserted in the chuck and tested for trueness. This can be checked at sight by running the motor freely. If a drill wobbles or is slightly bent, it should not be used. To do so would create enlarged holes. When using a portable power drill, hold it firmly with both hands. Always hold it at right angles to the work, regardless of its position or curvature. Tilting the drill at any time when drilling into or removing it from the metal may cause the hole to become elongated (egg-shaped). When work areas are not accessible to normal drilling, the problem can be overcome by using adapters and extensions. A straight piece of drilling can be attached to a twist drill and used as an extension, or a flexible extension can be used to drill around obstructions. Angle adapters can be attached to the chuck so that the shank of the adapter fits into the chuck, while the adapter itself holds the twist drill. When using an adapter, hold the drill firmly with one hand and the adapter with the other hand.

NOTE: Always remove burrs from drilled holes so that materials can fit smoothly and snugly. Burrs can be removed with a bearing scraper, countersink, or twist drill. If you use a countersink or twist drill, rotate it by hand.

WARNING

Always use safety goggles while drilling because metal particles can be thrown from the drill bit with dangerous speed and force.

Stationary Power Drill Press

The stationary power drill press is a tool that is used to drill holes that must be made with a high level of accuracy. The drill press is an accurate means to locate and maintain the direction of a hole. It provides the operator with a drill lever that makes it easy to feed the drill into the work. Various types of drill presses are available; the most common is the ordinary upright drill press (Figure 3-71). Airframe repairers should understand the following procedures related to using a drill press:

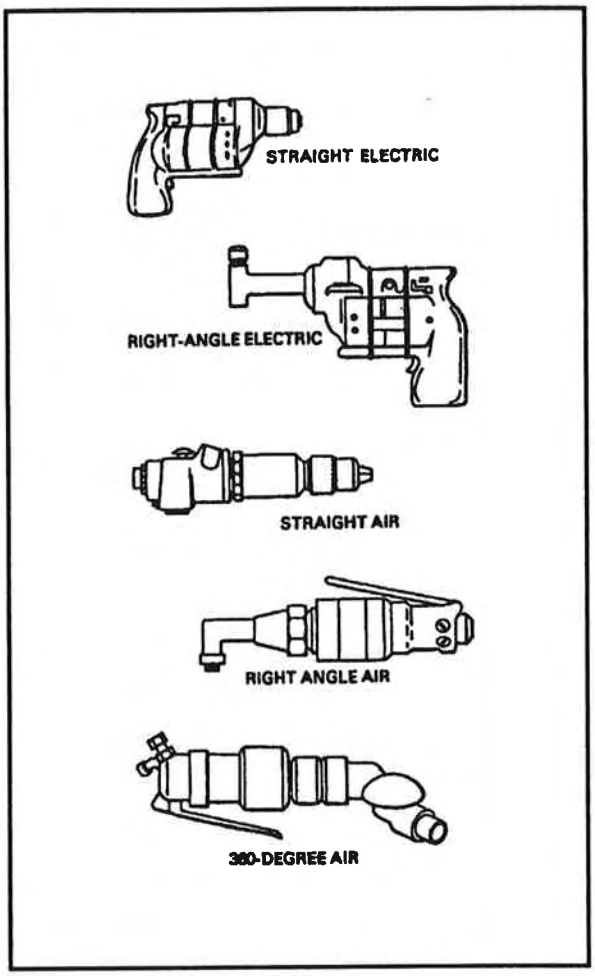

Figure 3-70. Portable power drills

- The drill press table can be raised or lowered to accommodate the material or part that requires drilling. The distance traveled by the drill in relation to the distance between the table and the drill point when it is drawn out of the hole determines whether the work table should be adjusted.
- Place material or part on the work table and bring the drill point down; align it with the hole to be drilled.
- Then clamp the material or part to the table to prevent it from slipping during the drilling operation. There are many different clamping devices that can be used separately or in combination for almost any job. Experience

Downloaded from http://www.everyspec.com

will enable you to select clamping devices to suit a particular job quickly and accurately. This will eliminate wasted time in setting up the part for drilling. Regardless of which clamping device you use, always place the part on parallels or backup blocks to protect the drill and table against damage.

WARNING

Always make sure that the clamps are properly fitted and securely tightened because material or parts that are not properly clamped could slip or bind on the drill and start spinning. This could cause potentially serious injury to the operator and damage to the equipment, material, or parts being drilled.

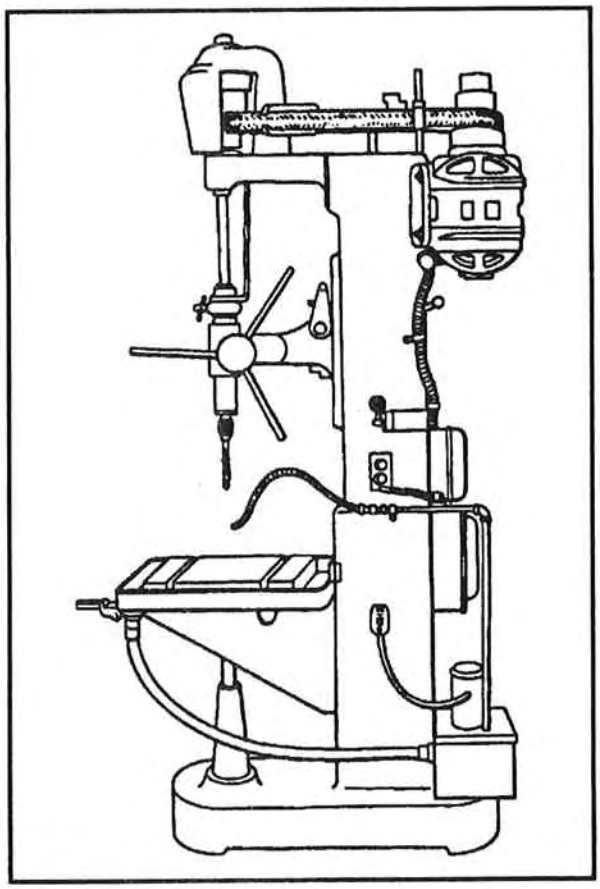

Figure 3-71. Stationary power drill press

- Check the drill press for proper lubrication. Frequent lubrication during continuous drilling will improve operating conditions. Keep oil ports clean and free from foreign particles. Always clean the press after each drilling operation.
- Check belt-driven presses every day to ensure they are free from grease and dirt. Apply dressing to the belt to prevent slippage or drying out. Belts should be kept at the proper operating tension.
- Some drill presses are equipped with gears that provide a means to increase or decrease the spindle speed. The press must be stopped when changing gears. If the gears do not mesh, pull on the belt and bring them to the proper meshing points.
- Check speed charts to ensure the machine is being operated at the proper speed and feed for the assigned drilling operation. A continually too heavy feed or too fast speed will cause the machine to labor and the drill bit to break or the press to be damaged.
- The degree of accuracy that can be attained with the drill press depends in part on the condition of the spindle hole, the sleeves, and the drill shank. Therefore, these parts must be kept clean and free from nicks, dents, and warping. Always make sure that the sleeve is securely pressed into the spindle hole.

CAUTION

1. Never insert a broken twist drill in a sleeve or spindle.

2. Never use a vise to clamp a sleeve when removing a drill bit because this will bend the sleeve.

GRINDING AND SANDING MACHINES

The terms grinding and sanding applied to the types of machines described here refer to a mechanical means of—

- Removing excess material and producing suitable metal surfaces with smoothing or sharpening tools.
- Sharpening, grinding, and dressing work.

Downloaded from http://www.everyspec.com

There are many kinds of grinding and sanding machines, but only those related to airframe repair are described here.

Pedestal Floor-Type Grinder

This grinder is used for sharpening tools and for other general grinding jobs. It usually has a grinding wheel run by an electric motor or a belt-operated pulley on each end of a shaft.

Wet Grinder

This grinder is similar to a pedestal grinder. However, unlike the latter, it has a pump to supply a flow of water onto a single grinding wheel. Water reduces the heat generated by grinding metal against the wheel and washes away any particles of metal or abrasive that were removed during the grinding. The water reenters an attached tank to be reused.

> **CAUTION**
>
> **Do not grind soft materials such as aluminum or brass as these materials will clog the pores of the grinding wheel and stop its cutting action.**

Bench Grinder

This grinder can be used to dress chisel points and screwdriver blade tips, sharpen drill points, remove excess metal from work, and smooth metal surfaces. The common type of bench grinder (Figure 3-72) is found in most metalworking shops. It is usually equipped with one medium-grain and one fine-grain abrasive wheel; there is a clear safety shield and a metal guard shroud over each wheel. The abrasive wheels are removable. Wire-brushed polishing wheels, sanding discs, or buffing brushes can also be installed on this type of grinder. The bearings and motor have cups for lubrication. Operating the bench grinder is simple, but use it with care and always follow instructions:

- Always check the abrasive wheels for cracks or other visible damage before using the grinder. Make sure the wheels fit tightly on the spindles.
- Always check the wheel guards to be sure they are properly fitted and on tight.
- Check to be sure the tool rests are aligned and tight.
- Know the correct angle for cutting tool points or tips before attempting to sharpen them. When sharpening a tool, apply feed pressure gradually so that just enough of the tool surface is in contact with the wheel to get the proper results. Be careful that feed pressure does not cause overheating during sharpening.
- Do not grind work on the side of an abrasive wheel. When an abrasive wheel becomes worn, its cutting efficiency is reduced because its surface speed is affected. A worn abrasive wheel should be replaced.
- Grinding operations generally require the use of both abrasive wheels. Use the medium or coarse wheel first when removing rough surfaces, when a lot of material must be removed, or when a smooth finish is not important. Use the finer wheel for sharpening tools and grinding to close limits. This wheel removes the metal from the surface more slowly and gives it a smoother finish.

> **WARNING**
>
> **1. Always wear goggles when operating the bench grinder, even if it is equipped with eye shields.**
>
> **2. Never operate the bench grinder without wheel guards, which serve to protect personnel from injury in case the work slips.**
>
> **3. Know the hazards involved in operating the bench grinder and guard against them during use to reduce the accident rate.**

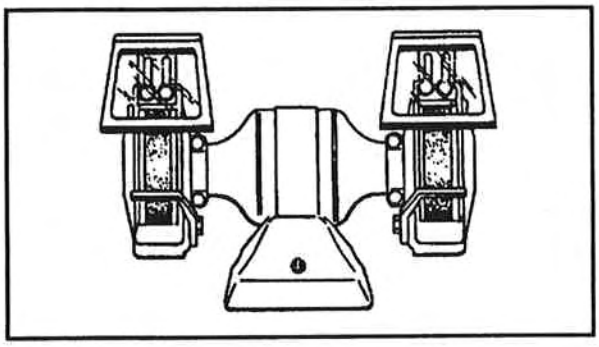

Figure 3-72. Bench grinder

Downloaded from http://www.everyspec.com

METAL-FORMING MACHINES

In aircraft metalwork the term metal-forming usually means shaping or bending metal in two dimensions. This operation is more difficult than bending in one dimension because some portions of the metal must be stretched or shrunk. Although hand tools are used for some phases of metal-forming work, many airframe repairs require powered and nonpowered machine tools; for example, metal-cutting machines and grinders and metal-forming machines. The metal-forming machines described here can be hand-operated or power-driven. Small machines are usually hand-operated; larger ones are power-driven.

Bar Folder (Bar Folding Machine)

This machine (Figure 3-73) is designed to make turns (or bendovers) and narrow edges; to fold small hems, flanges and seams; and to turn rounded locks on flat sheets of metal to receive stiffening wires. Most bar folders can form metal up to 22 gage thick and 42 inches long. Before attempting to operate the machine, you should understand the adjustment and operating procedures required to set up the bar folder. Adjustments are required for thickness of the metal and for width, sharpness, and angle of the fold.

Thickness of Material

To adjust for thickness, adjust the screws at each end of the bar folder. While doing this, place a piece of metal of the desired thickness in the bar folder and raise the operating handle until the small roller rests on the cam. Hold the folding blade in this position and adjust the setscrews so that the metal is securely and evenly clamped for the entire length of the folding blade. After the folder is adjusted, test each end of the machine separately by actually folding it with a small piece of metal.

> **CAUTION**
>
> **Be very careful not to adjust the bar folder too tightly because the clamping pressure can cause damage to the clamping blade. The machine is designed to operate freely. If it does not do so, the adjustment is too tight.**

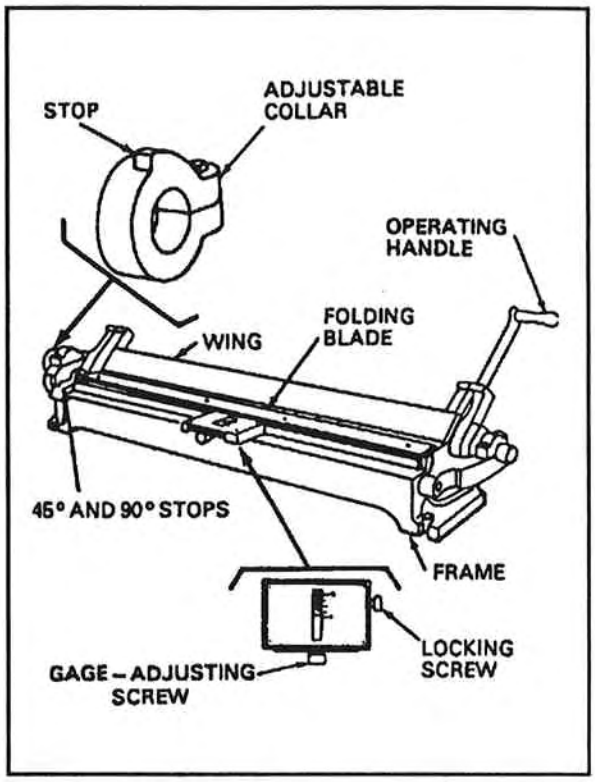

Figure 3-73. Bar folder

Width of Fold

Width of fold is controlled by the gage-adjusting screw near the center of the bar folder frame just under the folding blade. This screw moves the slide and gage back and forth as needed for the width of the desired fold. The gage is graduated in fractions of an inch from zero to 1 inch; a 1-inch fold is the largest that can be made on the bar folder. (Use the cornice brake to make larger folds.) After making the adjustment, lock the gage in place by tightening the locking screw on its right side.

Sharpness of Fold

The bar folder can be used to make either sharp or round folds. The sharpness of a fold is controlled by raising or lowering the wing. The wing is supported by a wedge with adjusting features. The knob for adjusting the wedge is in the center of the folding blade. To make a sharp fold, set the wedge so that the wing will stay in the same place throughout the operating cycle. To make a round fold, adjust the wedge so that the wing will be formed back as the fold is made.

Downloaded from http://www.everyspec.com

Angle of Fold

There are two positive stops on the bar folder: one for 45° and one for 90° folds or bends. An additional feature is the adjustable collar, which can be adjusted to any degree of bend or fold within the capacity of the bar folder. To form 45° or 90° angles, move the stop for the desired angle into place and form the desired angle. To form other angles, use the adjustable collar by loosening the setscrew and setting the stop at the desired angle. After setting the stop, tighten the setscrew and form the bend.

Making the Fold

After adjusting the bar folder for the desired fold, insert the metal to be folded between the folding blade and the jaw. Hold the metal firmly in place against the gage. As the operating handle is pulled forward, the jaw automatically raises and holds the metal until the desired fold is made. When the operating handle returns to its original position, the jaw and blade also return to their original positions and the metal is released.

Cornice Brake

This machine (Figure 3-74) is used to form locks and seams, turn edges, and make squares, angles, and bends. More versatile than the bar folder, it operates in much the same way except that it has a clamping bar instead of a stationary jaw. Any bend formed on a bar folder can also be made on the cornice brake. However, unlike the bar folder, the cornice brake allows the sheet of metal to pass through the jaws from front to rear without obstruction. Different manufacturers make cornice brakes of varying bending capacity. Normally, this machine varies in sheet metal capacity from 12 to 22 gage and its bending lengths vary from 3 to 12 feet. The bending capacity of the cornice brake is determined by the bending edge thickness of the various bending leaf bars. To operate the cornice brake properly, follow these procedures:

> **CAUTION**
>
> **Never use the cornice brake to bend wire, rods, band iron, or spring-tempered metal sheets because the composition and shape of these items could damage the working surfaces of the brake.**

- When making ordinary bends with the cornice brake, place the sheet on the bed with the sight line (the mark indicating the bend line) directly under the edge of the clamping bar. Then bring the clamping bar down to hold the sheet firmly in place. Set the stop at the right side of the cornice brake for the proper angle or amount of bend, and raise the bending leaf until it strikes the stop. If making more bends, lift the clamping bar and the sheet to the correct position for the bend.
- When bending sheets heavier than 22 gage, raise the clamping bar a distance equal to the thickness of the metal and set it back the same distance; reinforce the bending leaf with angle iron.
- To get the best results from the cornice brake, you must know how to adjust it for various operations. These adjustments are very important because they save time and improve the quality of the work. Keep the cornice brake level on the floor to prevent the top leaf from creeping when clamping metal between the jaws. If the top leaf creeps, adjust the slot casting adjustment and lock screws. A wedge can be placed under the rear legs on the side that creeps. This wedge should be made for permanent setting.
- Check the bending leaf when it is in the down position. The edge of the leaf should be 1/64 inch below the bed edge at the ends and 1/32 inch below it at the center. To get and maintain this alignment, follow these steps:
  - Adjust leaf ends with bending-leaf hinge adjustment screws.
  - Adjust leaf center with bending-leaf adjustment bolt.
  - Adjust bend ends with bed-end adjustment screws and bed adjustment bolt.
- When bending various thicknesses of sheet metal with the cornice brake, move the top nose bar back at the bending edge. If the material to be bent is within 4 gages of the cornice brake's capacity, move the top leaf back a distance equal to twice the thickness of the material. To make sharp bends on lightweight material, move the top leaf forward. Follow these steps when moving the top leaf to make these bends:

Downloaded from http://www.everyspec.com

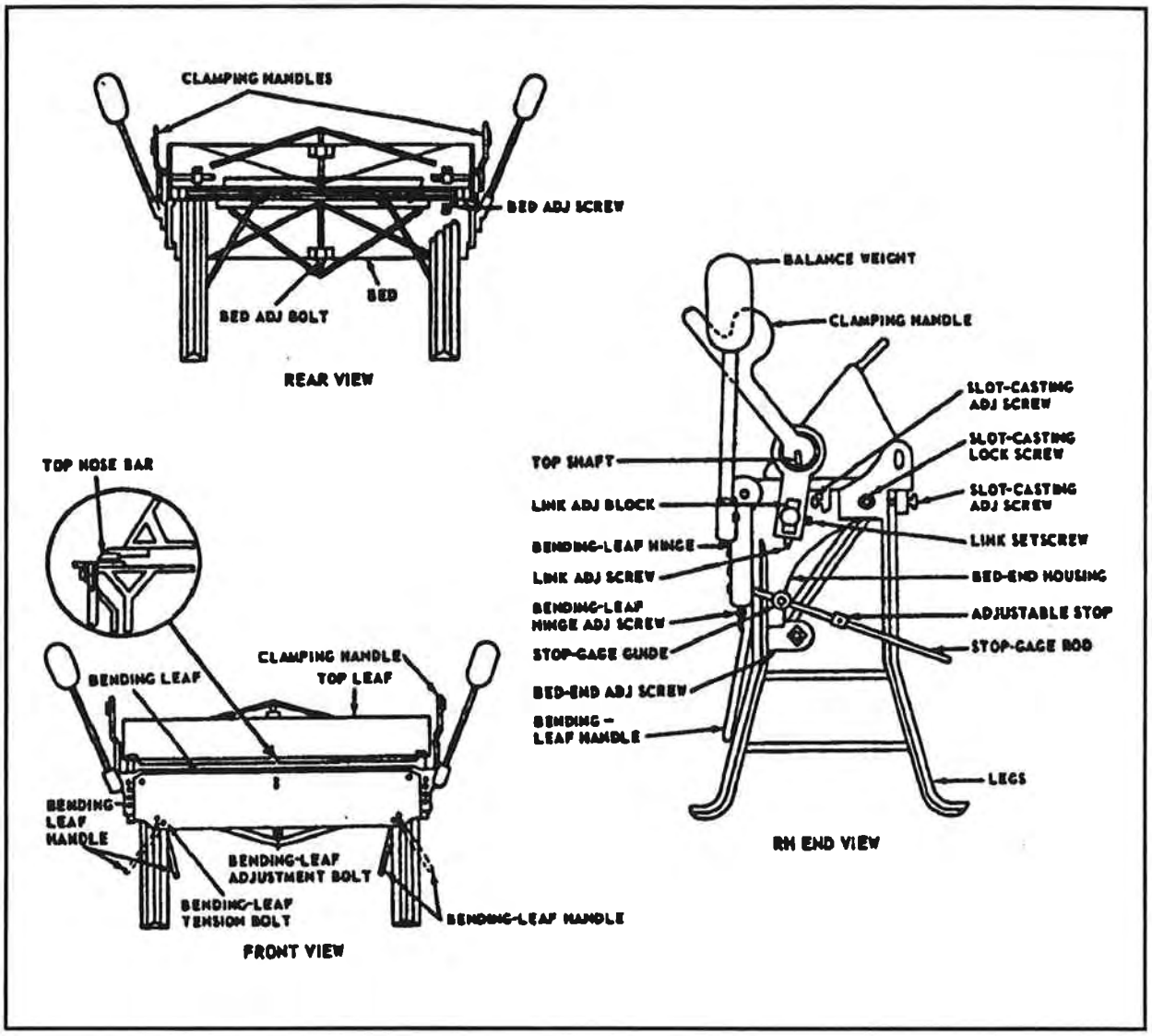

Figure 3-74. Cornice brake

- Loosen the slot-casting lock screws.
- Use the slot-casting adjusting screws to reposition the top leaf forward or backward as required by the metal's thickness.
- When the top leaf has been adjusted to the desired position for bending, lock it by tightening the slot-casting lock screws firmly.

• Keep the clamping pressure firm enough to hold the metal in place while the bend is being made. Remember that each different metal gage requires a different adjustment and that the clamping pressure should be equal on both ends of the machine. Change this pressure by adjusting the link adjusting block as follows:

- Loosen link setscrews.
- Adjust link adjusting blocks to thickness of metal with link adjusting screws.
- Secure link adjusting blocks in place by tightening link setscrews.
- Using a test strip of metal, make a bend to ensure that the adjustments are correct.

Downloaded from http://www.everyspec.com

Repeat these procedures as needed to get correct adjustments.

- Most metals have a characteristic known as springback. This means that they have an inherent tendency to return to their normal shape. For example, if the cornice brake is set for a 90° bend, the metal bend will probably form an angle of about 87° or 88°. Therefore, if a 90° bend is desired, set the cornice brake to bend an angle of about 93° to allow for springback. In some cases the material will bend too much or further on one side of the brake than the other. To correct this condition, set the top leaf back on the end where the sheet is overbending. If the bending leaf becomes bowed after repeated heavy use, tighten both its tension bolts until the center is brought in line. This line should be straight; check it with a straightedge.

Molds or formers are most often used to make gutters. They come in half-round sizes, such as 5/8, 1, 1 5/8, 2 1/4, and 3 inches and are attached to the cornice brake with clamps. When attaching formers to the brake, there should be 1/2-inch clearance on the side of the formers against the bending leaf. Position the clamps vertically to the ground and tap them lightly with a mallet. This creates enough friction to hold the formers in place. To remove the clamps, tap upward on them with a mallet.

Box-and-Pan Brake

This machine (Figure 3-75) is specially designed for making boxes of various sizes and shapes; it allows all sides to be formed without distorting any of the unfinished bends. Its construction is similar to that of the cornice brake except that its clamping leaf is divided into sections called fingers or shoes that vary in width and are interchangeable. A box-and-pan brake can be used for any work that can be done on a standard cornice brake. Adjustments (such as for radius and thickness) can be made by the same procedures that apply with the cornice brake. Before using this brake, make sure the fingers are securely seated and the thumbscrews tightened. To remove any fingers, loosen the thumbscrews, raise the clamping fingers by pushing the clamping bar backward, and then pull the fingers forward. Reverse this procedure to install fingers. Before doing any work with the brake, make sure that all adjustments have been made for the gage of metal being used.

> **CAUTION**
>
> **Never use the box-and-pan brake to bend wire, rods, band iron, or spring-tempered metal sheets because the composition and shape of these items could damage the working surfaces of the brake.**

Slip-Roll Former

This machine (Figure 3-76) is used to form sheet metal into various cylindrical shapes and diameters. It has right- and left-hand end frames, a gearbox, three solid steel rolls, a hand crank, and a bed. Two of these steel rolls, called front rolls, serve as feeding or gripping rolls. They are turned by a system of gears enclosed in the gearbox. The gear system is operated by the hand crank. The rear roll serves as an idler that shapes the metal to the proper curvature as the geared rolls turn. The front rolls are adjusted by two front adjusting screws at each end of the machine. The rear roll is adjusted by two screws at the rear of each end frame. Both front and rear rolls are grooved to allow the machine to form objects with wired edges. The upper roll has a release that allows the metal to be removed easily after it has been formed. When using the slip-roll former, be careful to follow these steps and procedures:

> **WARNING**
>
> **Remove all loose clothing and keep fingers well away from the rolls before operating a slip-roll former.**

> **CAUTION**
>
> **When forming an object with a folded edge, make sure there is enough clearance between the rolls to prevent damaging or flattening the fold. Keep the rolls clean and free of scratches and dents.**

Downloaded from http://www.everyspec.com

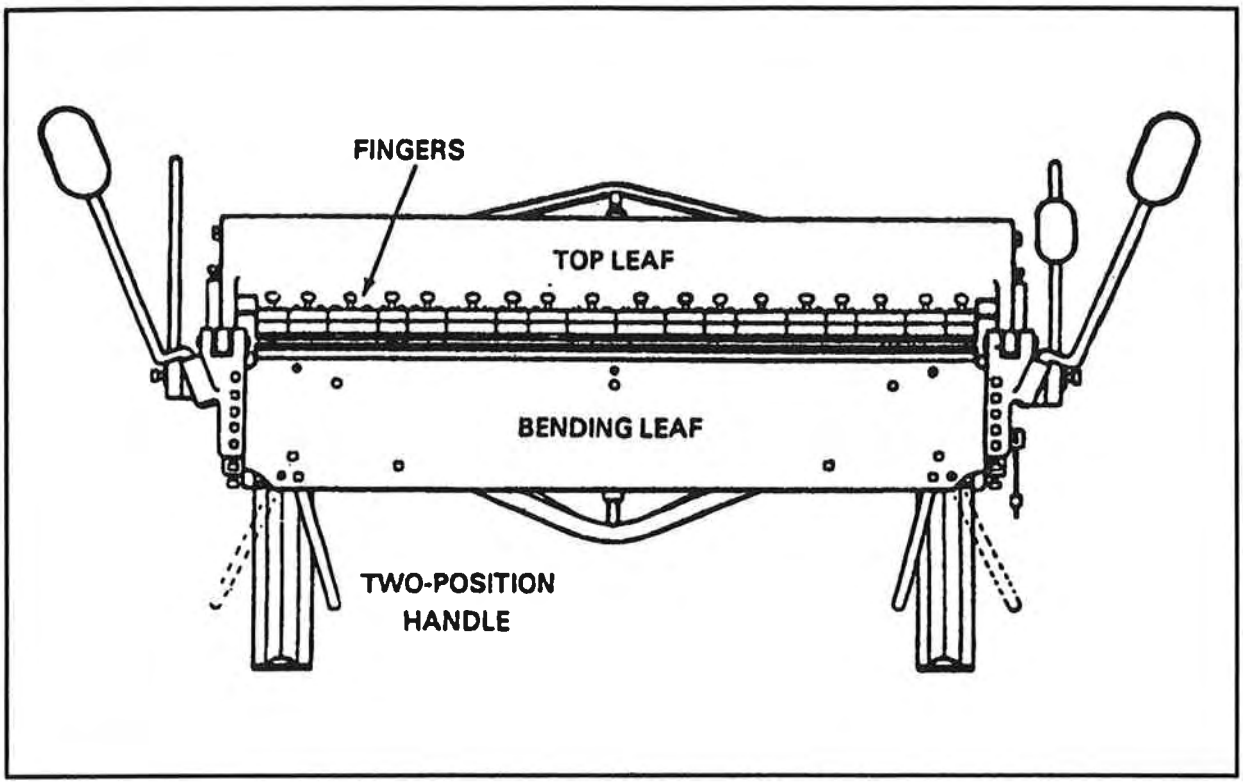

Figure 3-75. Box-and-pan brake

- Raise or lower the front roll so the sheet of metal can be inserted. Use the knurled thumbscrews at each end of the machine to adjust this roll. Adjust the rear roll to give proper curvature to the part being formed, using adjusting screws provided for this purpose at the rear of each end frame.

NOTE: The slip-roll former has no gages to indicate settings for a specific diameter. Use trial-and-error settings to obtain the desired curvature.

- Insert the metal to be formed between the rolls from the front of the machine. Start the metal moving between the rolls by rotating the operating handle clockwise.
- Form a starting edge by holding the operating handle firmly with your right hand and raising the metal with your left hand. The bend of the starting edge is determined by the diameter of the part being formed. If the edge of the part is to be flat or nearly flat, do not form a starting edge. Instead, rotate the operating handle until the metal is partway through the rolls. Then move your left hand from the front to the upper edge of the sheet. Roll the rest of the sheet through the machine.
- If the desired curvature is not obtained, rotate the operating handle counterclockwise to return the metal to its starting position. Then raise or lower the rear roll and roll the metal through the rolls again. Repeat until the desired curvature is obtained. Release the upper roll and remove the formed metal part.
- If the part being formed is tapered, set the rear roll so that the rolls are closer together on one end than on the opposite end. Determine the extent of this adjustment by trial and error.
- If the part being formed has a wired edge, the distances between the upper and lower rolls and between the lower front roll and the rear roll should be slightly greater at the wired end than at the opposite end.

Downloaded from http://www.everyspec.com

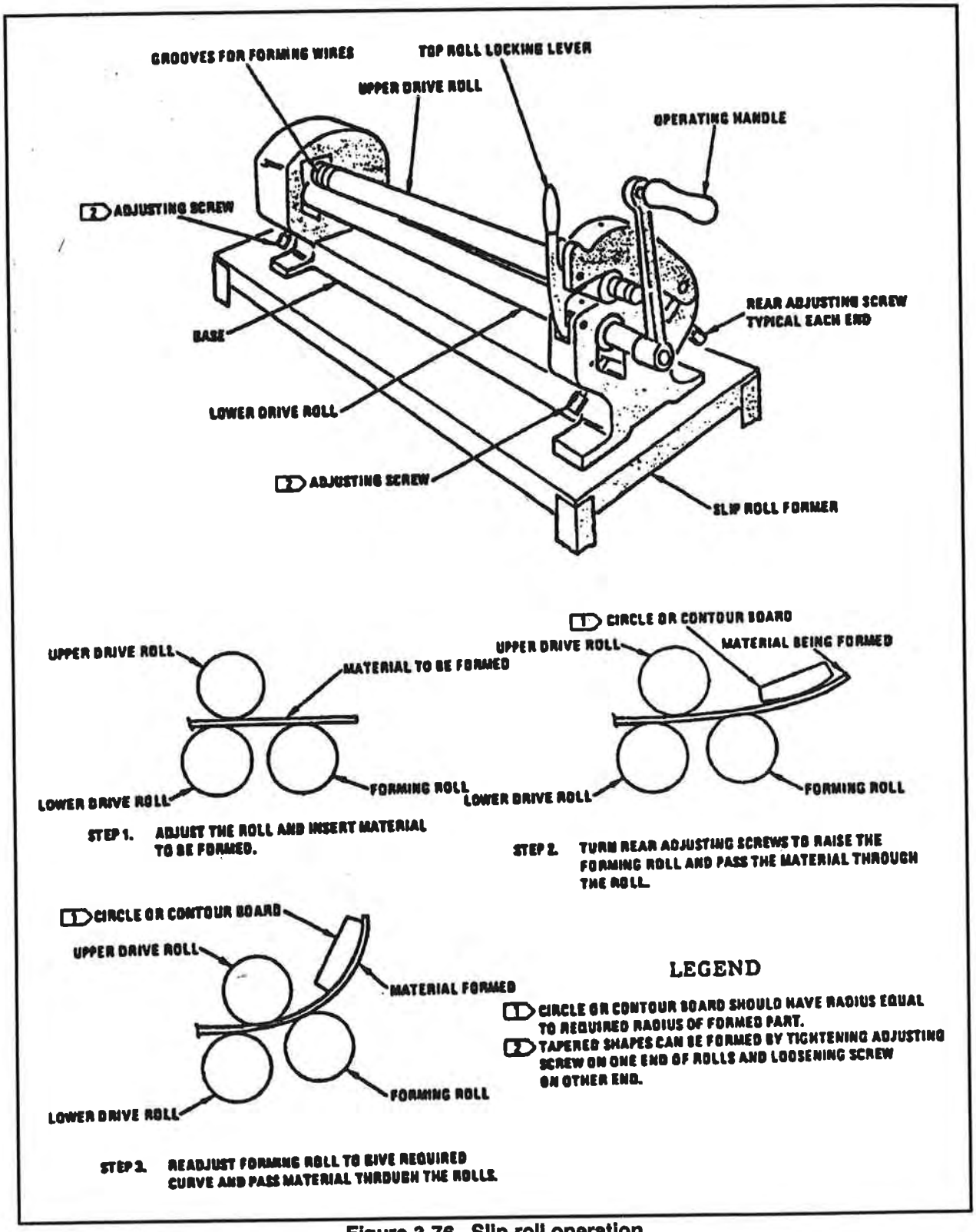

Figure 3-76. Slip-roll operation

Downloaded from http://www.everyspec.com

SHRINKING-AND-STRETCHING MACHINE

A shrinking-and-stretching machine (Figure 3-77) is used to form angles and channels and to smooth curves in materials used in aircraft structural repair. This machine is equipped with two sets of jaw assemblies (one for shrinking, one for stretching). By replacing the jaw assemblies, the machine can be used to form either concave angles (shrinking) or convex angles (stretching). It has a ram actuated by the pendulum motion of a foot pedal and cam mechanism inside the frame. No adjustment need be made for thickness because the pendulum movement of the counterbalanced foot pedal compensates for the different thicknesses of materials within the machine's capacity.

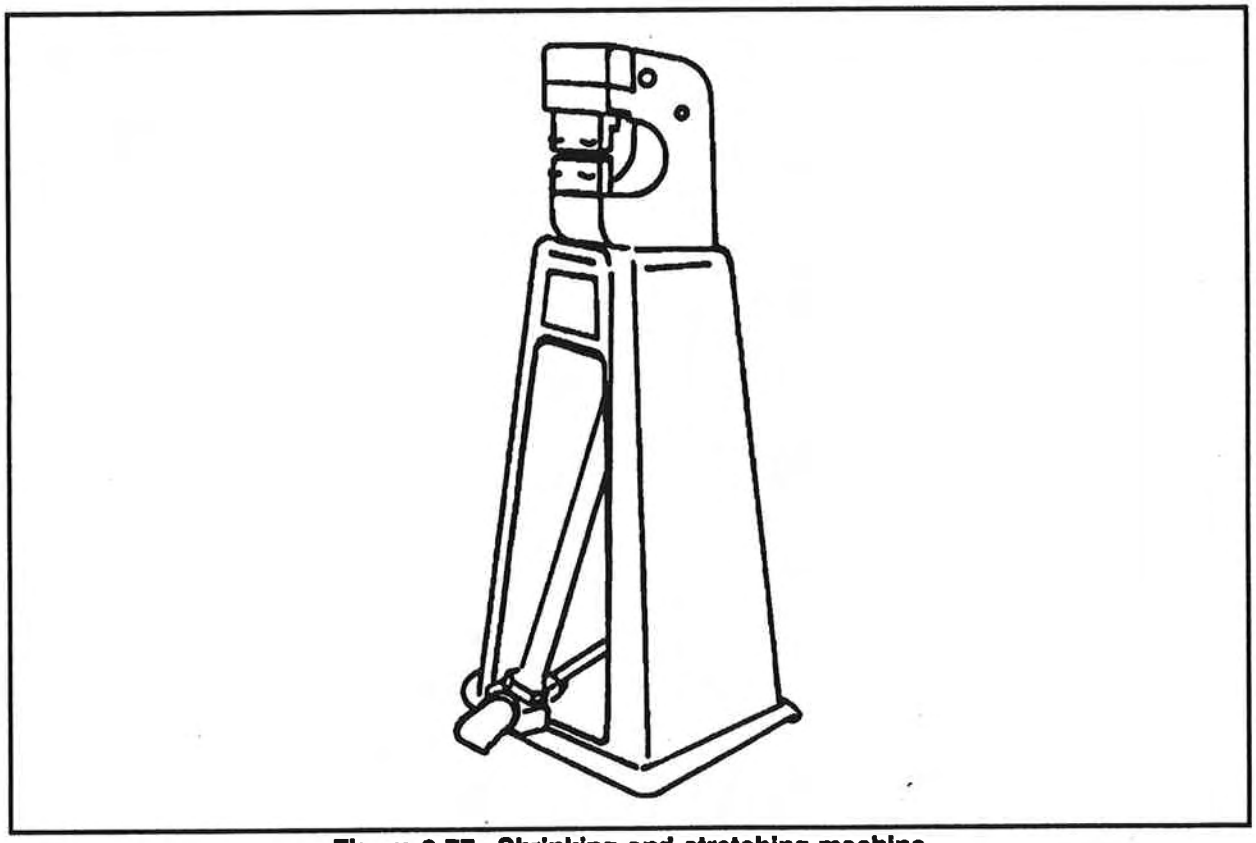

Figure 3-77. Shrinking-and-stretching machine

Downloaded from http://www.everyspec.com

Downloaded from http://www.everyspec.com

CHAPTER 4

ENGINEERING DRAWING AND BLUEPRINT READING

Neither industry nor the Army depends solely on written or spoken words to present information and exchange ideas. Misinterpretation may result when words alone are used. Engineering drawing is the descriptive graphic language used by engineers and draftspersons to express information required to construct or assemble objects. This graphic language provides precise information on every detail needed to make a part or assembly. Engineering drawings are reproduced as blueprints. A single view or a system of related views makes it possible to interpret and visualize the shape of an object, a process known as blueprint reading. To interpret blueprints, airframe repairers must understand the lines, notes, abbreviations, and symbols used in them.

TERMS

To convey an accurate description of an object by a drawing, draftspersons and readers must understand the terms used in the same way. Following are definitions of terms used in engineering drawings:

- Length—usually the greatest dimension of an object or any part of it. Figure 4-1 shows a board with a cleat attached. The board is 24 inches long; the cleat, 18 inches long. In both cases length is the greatest dimension of the object.
- Width—usually the dimension of an object from side toside or in a direction at right angles to the length. In Figure 4-1 the board is 18 inches wide, while the cleat is only 3 inches wide.
- Thickness—usually the smallest dimension of the object or any part of it. Thickness can refer either to the main part of the object or to some separate part attached to it. It can also refer to a part projecting from the object; however, it does not apply to a groove cut in an object. Figure 4-1 shows that the board is 3/4 inch thick and the cleat, 1 inch thick.
- Height—the dimension of an object or of a part of it that rises above either its surface or the object on which it stands. For example, if a block is placed on a table so that its greatest dimension is upright (standing on end), this dimension is its height, not its length. In Figure 4-2 the block is 3 inches high; that is, its top is 3 inches above its bottom or above the surface it stands on.
- Depth—the perpendicular measurement downward from the top surface of the object or backward from the front surface. Figure 4-2 shows a block with a groove in the top surface. This groove is 1/2 inch deep; that is, it extends 1/2 inch below the top surface of the block.

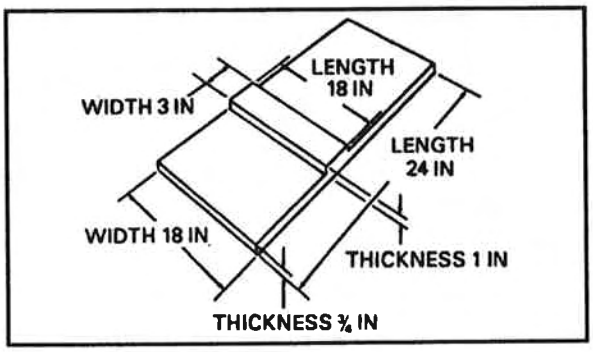

Figure 4-1. Example of length, width, and thickness

LINES

The ability to read this or any other printed page depends on the reader's skill in recognizing letters of the alphabet and knowing how these letters are used to build words and sentences. In the same way, a repairer's ability to read drawings and blueprints depends on the ability to recognize specific lines and interpret their meaning in relation to objects. Because these lines are so fundamentally important, they are known as the alphabet of lines. Refer to Figure 4-3 (A through N) for illustrations of these lines. Refer to Figure 4-4 for examples of these lines used in a drawing.

Centerline

For accuracy in constructing many objects, dimensions must be laid off from the center of an object rather than from the face or side. This is especially

Downloaded from http://www.everyspec.com

true of circular objects or objects made up of circular or curved parts. The line used to mark the central axis of an object is known as a centerline (A). Centerlines are indicated by–

- Long and short dashes spaced evenly and alternately with a long dash at each end.
- Short dashes intersecting at the center.

Very short centerlines may be broken if they are not confused with other lines. Centerlines are also used to indicate the travel of the center of the object.

Dimension Lines

A satisfactory drawing must indicate shape, size, and all features of an object. Dimensions and the various features are indicated by dimension lines (B). Dimension lines terminate in arrowheads at each end. They are unbroken on construction drawings; they are broken on production drawings only where space is required for the dimension.

Leader Lines

These solid lines are used to indicate a part or section to which a number, note, or other reference applies (C). They end in an arrowhead or a dot. Arrowheads should always end at a line; dots should be within the outline of an object. Leader lines should end at any suitable portion of the note, reference, or dimension. Leader lines may penetrate notes, references, and dimensions when required for clarity.

Phantom Lines

These medium lines are used to indicate an alternate position of delineated parts of an item, repeated details, or the relative position of a missing part (D). They consist of one long and two short dashes evenly and alternately spaced with a long dash at each end

Sectioning and Extension Lines

Sectioning lines are used to indicate the exposed surfaces of an object in a sectional view (E). They are usually solid thin lines but may vary with the kind of material shown. Extension lines are used to extend the limits of a dimension out and away from the drawing itself. The draftsperson usually tries to place all dimensions of an object outside its outline, primarily for neatness and clarity. However, this is not always possible because many objects have features on more than one surface. This makes it necessary to place some dimensions within the outline. Regardless of whether dimensions are placed inside or outside the surface outline, their limits must be extended out and away from the feature whose dimension is being shown. Unless this is done, the dimension lines will become confusing. Extension lines should not touch the outline.

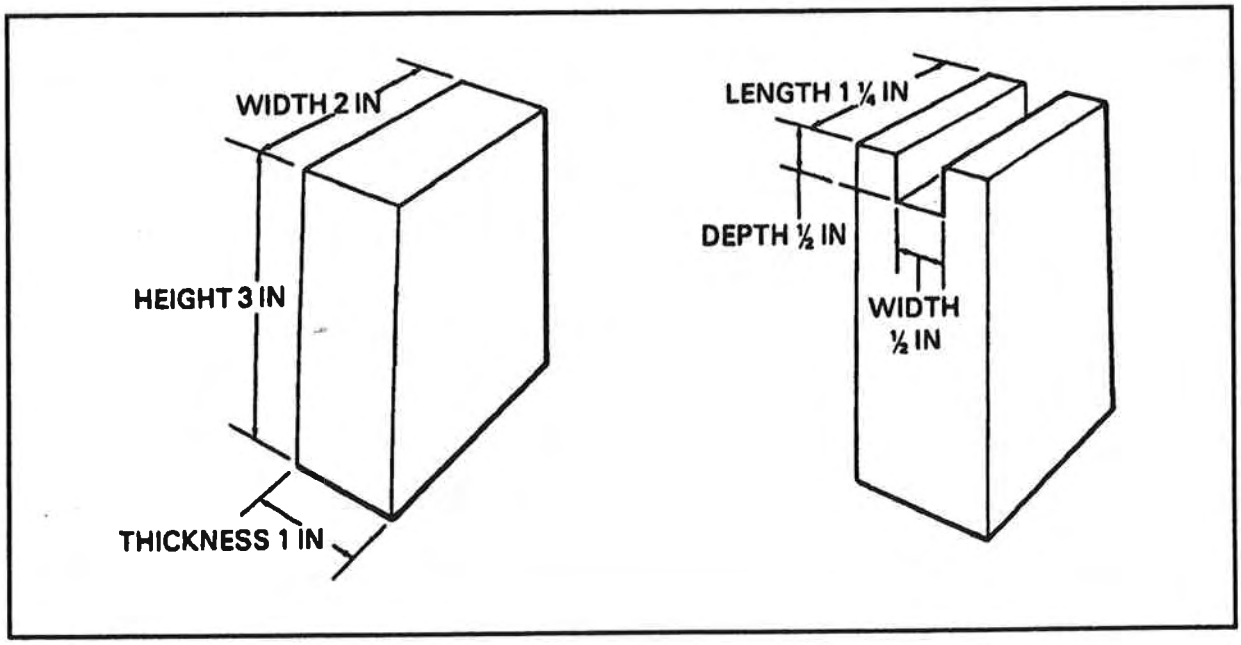

Figure 4-2. Examples of height and depth

Downloaded from http://www.everyspec.com

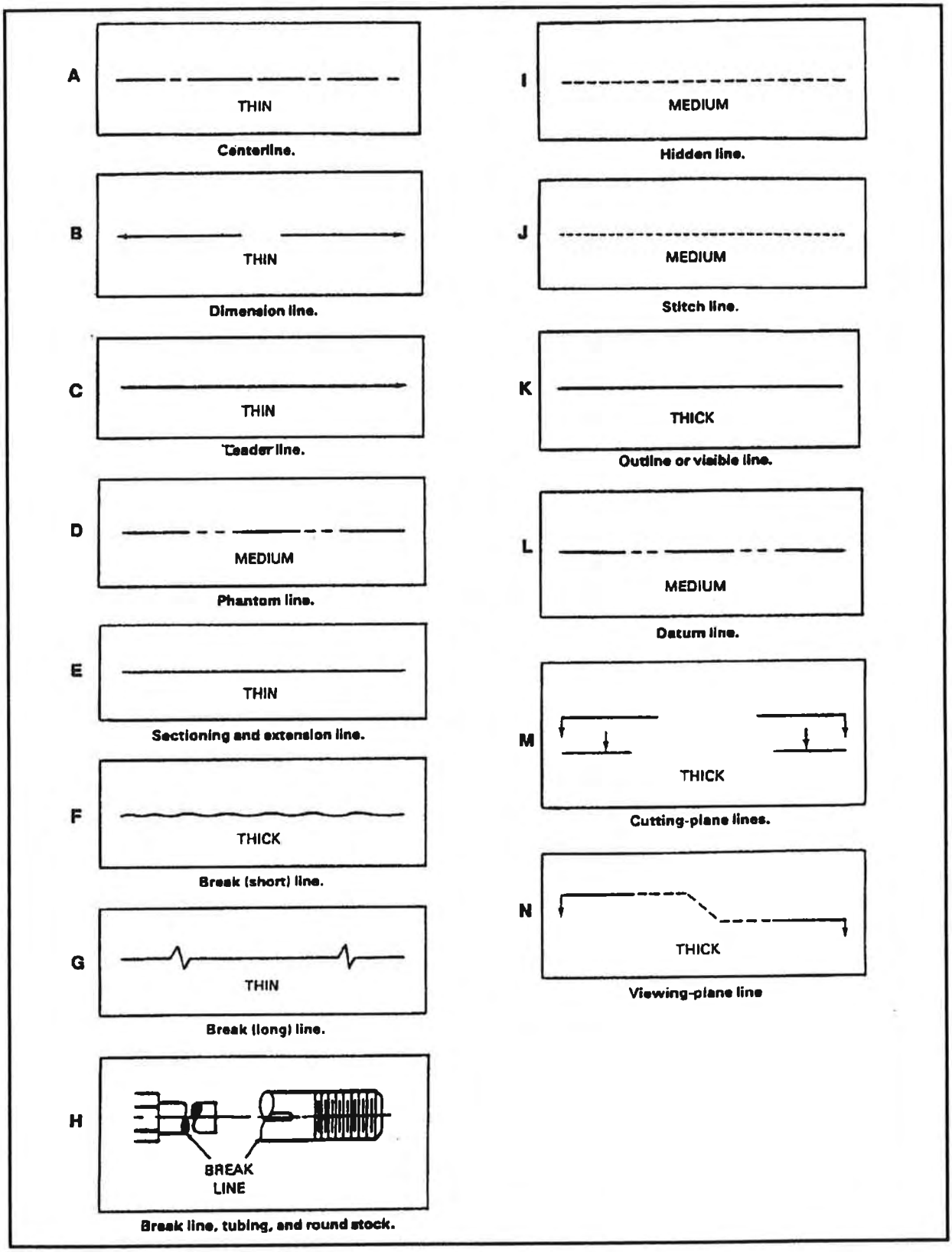

Figure 4-3. Lines used in engineering drawings

Downloaded from http://www.everyspec.com

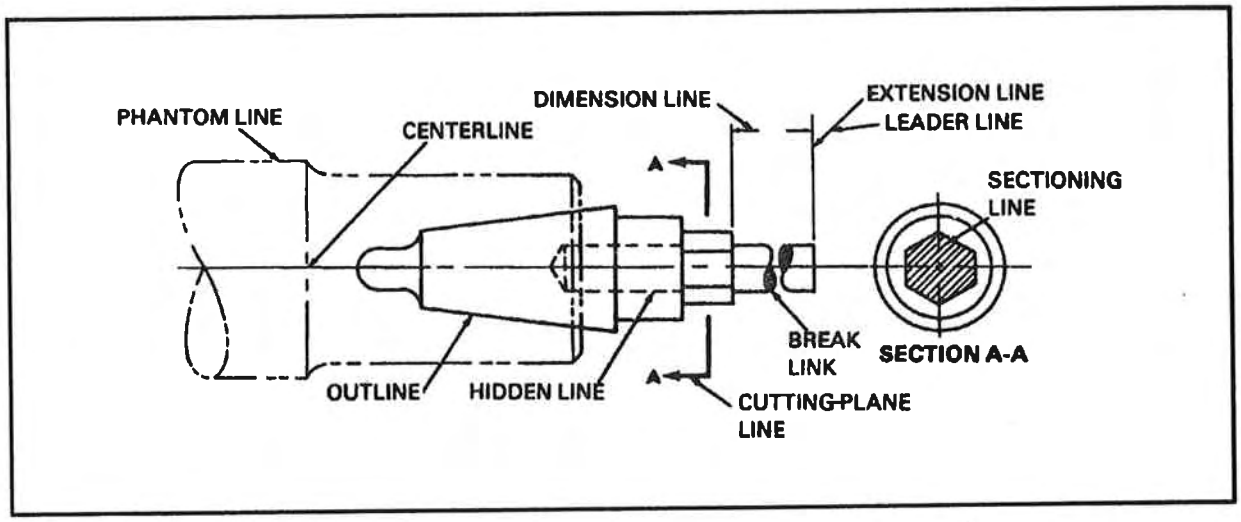

Figure 4-4. Examples of lines used in a drawing

Break Lines

Short breaks are indicated by solid, freehand lines (F). For long breaks, full ruled lines with freehand zigzags are used (G). In shafts, rods, and tubes that have portions of their lengths broken out, the ends of the break should be drawn as shown in the figure (H).

Hidden Lines

These lines are short, evenly spaced dashes used to show the hidden features of a part (I). They always begin with a dash that touches the line they start from, except when such a dash would be a continuation of a full line. Dashes touch at corners; arcs start with dashes at the tangent points.

Stitch Lines

These lines are used to indicate stitching or sewing lines (only on fabrics) (J). They are a series of very short, evenly spaced dashes with about half the length of the dash used in hidden lines. Long lines of stitching may be indicated by a series of stitch lines connected by phantom lines. Airframe repairers will seldom encounter stitch lines.

Outlines or Visible Lines

These lines are used for all lines in the drawing that represent visible lines on the object (K).

Datum Lines

These lines are used to indicate the position of a datum plane (L). They consist of one long dash and two short dashes evenly spaced.

Cutting-Plane and Viewing-Plane Lines

Cutting-plane lines are used to show an exploded view of a particular section of an object (M). Viewing-plane lines are used to show the plane from which a surface is seen (N).

Lines Representing Threads

Threads are indicated on a drawing in various ways. Figure 4-5 (A) shows a thread profile; (B), a thread profile in section; and (C), how threads are represented in a blueprint. To save time, a draftsperson uses symbols when objects are not drawn to scale. Dimensions are given for the length of the threaded part, but other necessary information appears in a note which in this figure is 1/4-20NC-2:

- 1/4—nominal size or outside diameter.
- 20—20 threads per inch.
- NC—thread series (in this case, National Course).
- 2—class of thread and tolerance (commonly called fit).

NOTE: The two most widely used screw-thread series are NC and National Fine (NF). NF threads have more threads per threaded portion of the screw length than NC.

For a left-hand thread, the class is followed by a dash and the letters LH in bold type. Threads without the letters LH are right-hand threads. Internal threads

Downloaded from http://www.everyspec.com

may also be shown by several kinds of symbols. Here again, threads need not be shown when a symbol will do just as well. Holes A and B will have the same threads as hole C, as indicated by the note in Figure 4-4. The threads shown in Figure 4-5 may be screwed into these threaded holes. The symbol on each one indicates that the threads are exactly the same. Threads may be shown in sections, especially in assembly views.

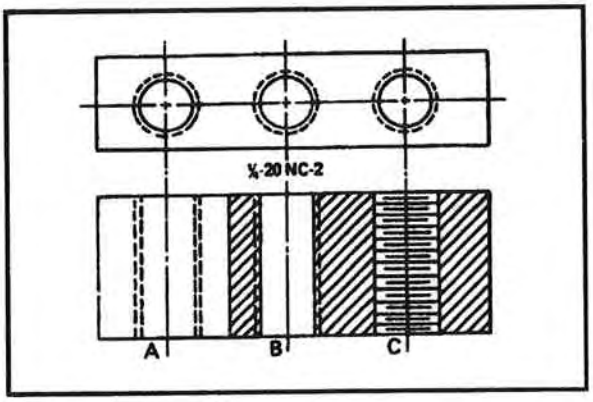

Figure 4-5. Internal threads

Figure 4-6 shows the relationship of the threaded members. Bolts, studs, and cap screws are indicated on drawings by outlines and symbols. Figure 4-7 shows them in outline only.

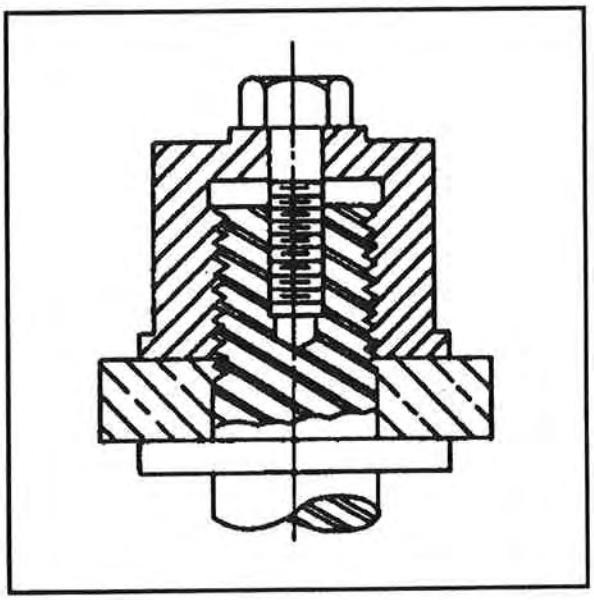

Figure 4-6. Threaded assembly

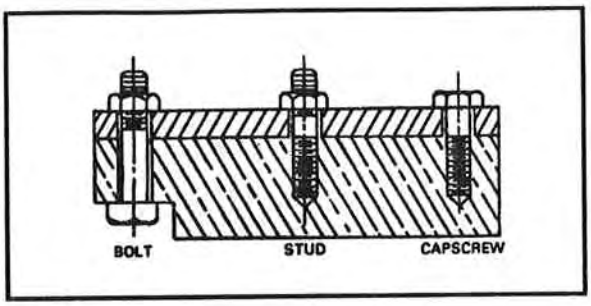

Figure 4-7. Bolts, studs, and cap screws

SCALE

Whenever possible, objects are drawn to actual size. However, many objects are so large that drawings to actual size could not be used in a shop. Therefore, the draftsperson draws them to a fractional portion of their true size. Drawings of small objects are enlarged. A drawing of an object to its actual size is called a full-size or full-scale drawing. A drawing to some fractional portion of an object's size or an enlarged drawing is called a scale drawing. The scale is the ratio between the actual size of the drawing and the actual size of the object. The scale is indicated on the drawing, usually in the title block (lower right-hand corner), but it can be on the face of the drawing itself. The scales most commonly used are full, three-quarter, half, quarter, and one-eighth. If drawings are made to actual size, they are indicated as being full-size or full-scale. If they are larger than actual size, they are indicated as being twice full-size or twice full-scale, and so on.

DRAWING SIZE

Drawings are made full-size whenever possible or as nearly full-size as practical. In large aircraft corporations thousands of blueprints are kept for future reference after initial use. Storage of drawings and prints must be considered; therefore, all drawings are made on standard sheet sizes. The standard sheet size for most small drawings and blueprints is 8 1/2 by 11 inches. Larger-size drawings are usually made in a multiple of this size so they can be folded to standard size and stored conveniently.

DIMENSIONING

Neither drawings nor blueprints should have to be measured or scaled, as it is often called. A complete drawing should indicate all dimensions. Return an incomplete drawing (one that does not give specific

Downloaded from http://www.everyspec.com

dimensions) to the drafting or engineering department for corrections.

After the blueprint has been completed, construction of the object depends on the note for a description of size. A dimension line shows the distance between two points, lines, or planes, or a combination of these. The numerical value of the dimension line gives the distance, the direction in which the value applies, and the points between which it applies. The note provides an explanation of lines and symbols used in the drawing. Lines and symbols used in dimensioning include dimension lines, extension lines, numerical values, notes, finish marks, and so forth.

Placement of Dimension Line

Draftspersons use a standard procedure for placing dimensions on a drawing. All dimensions and letters should read from left to right. The dimension of an angle is indicated by placing the angle's degree in its arc. The diameter of a circle is used to show the dimensions of circular parts. Circles or parts are usually marked with the letter D or the abbreviation DIA following their radius and with the letter R following the dimension. Parallel dimensions are placed so that the longest dimension is farthest from the outline of the object. On a drawing that shows several views, dimensions are placed on the blueprint to show the details of each view to best advantage.

Angles

Figure 4-8 shows how angles are dimensioned. An arc is drawn and the dimension (degree) of the arc is placed so it can be read from a horizontal position. If the angle is too acute to allow enough space for the dimension, it may be placed as in the example of a 15° angle shown in the figure.

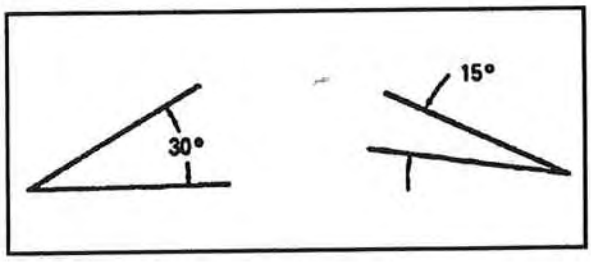

Figure 4-8. Angles

Small Parts

When dimensioning small parts, the available space is often so limited that it prevents the use of normal-size dimensioning lines, symbols, or figures. In such cases, dimensioning is done by placing notes and sizes to one side and extending arrows, called leaders, to the small parts (Figure 4-9). Arrows and figures should always be kept as clear as possible of other arrows and figures.

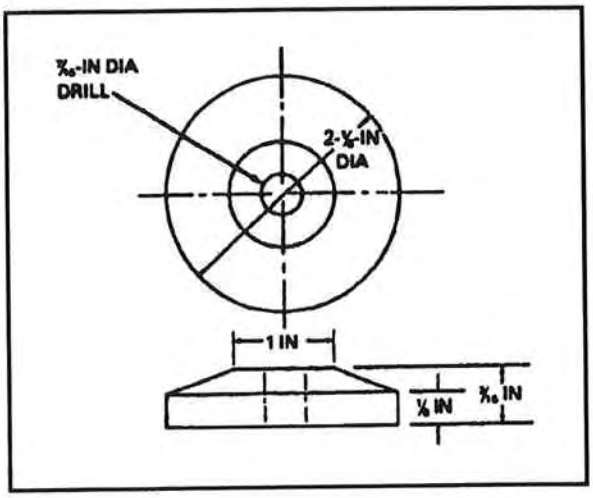

Figure 4-9. Dimensioning small parts

Tapes

Figure 4-10 shows a dimensioning method for an object with inclined or tapered sides. Outside dimensions are placed farthest away from the object; inside dimensions are placed closest to it. The taper to the foot means the difference in diameter, in 1-foot increments, for the length of the object.

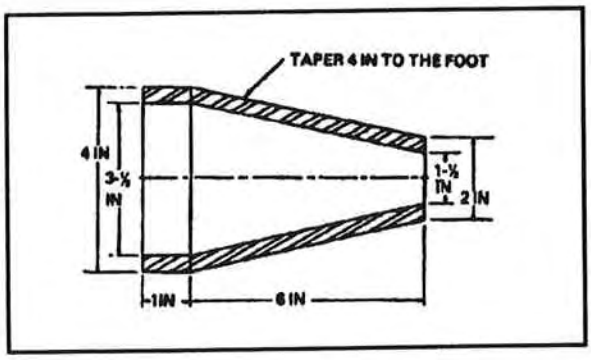

Figure 4-10. Dimensioning tapers

Curves

A curved object may be drawn and dimensioned by using several radii or by the offset method, in which the path of the curve is found by taking a number of measurements from an established line, such as AB

Downloaded from http://www.everyspec.com

in Figure 4-11. Dimensions here are marked at the points indicated by C and at equally spaced points on the object. The distance between the vertical dimension is given horizontally as at point D and equally spaced points.

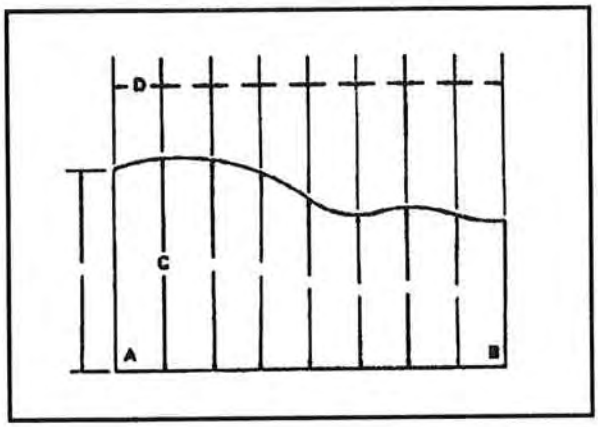

Figure 4-11. Dimensioning curves

Geometric Solids

When dimensioning spheres, the diameter of the most convenient view is given. Normally, only one view of a cone is needed to indicate the diameter and height. The height of a pyramid may be shown on the front view; any other dimension, on a view of the base. The two necessary dimensions of a cylinder – length and diameter – may be shown in one view.

Circles

Diameter dimensions are given for circles; radius dimensions are given for arcs. Centerlines cannot be used as dimension lines; therefore, diameters of circles are sometimes shown by lines within the circle. This method is acceptable, but extension lines and dimension lines placed outside the circle are preferable (Figure 4-12). Another method, preferred for dimensioning small diameters, is to show the diameter on a leader at one side with the arrow touching the circumference.

Holes

To show distances between holes in an object, dimensions are usually given from center to center of the holes rather than from outside to outside. When a number of holes are shown in various sizes, desired diameters are given on a leader, followed by notes concerning the machining operations for each hole. If a part is to have three holes of equal size equally spaced, this information is also given in the notes. For precision work sizes are given in decimals. Diameters and depths are given for counterbore holes. For countersunk holes, the angle of countersinking and the diameters are given (Figure 4-13).

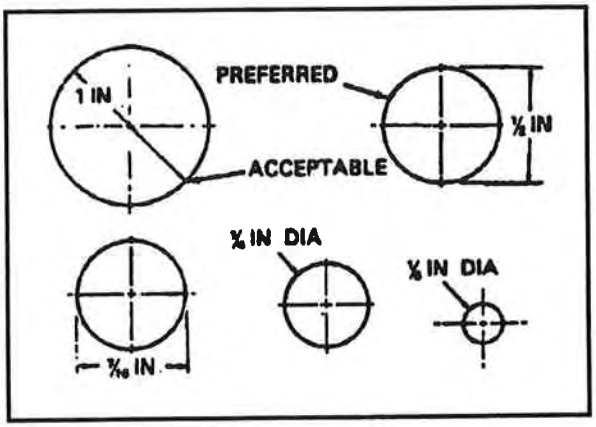

Figure 12. Dimensioning circles

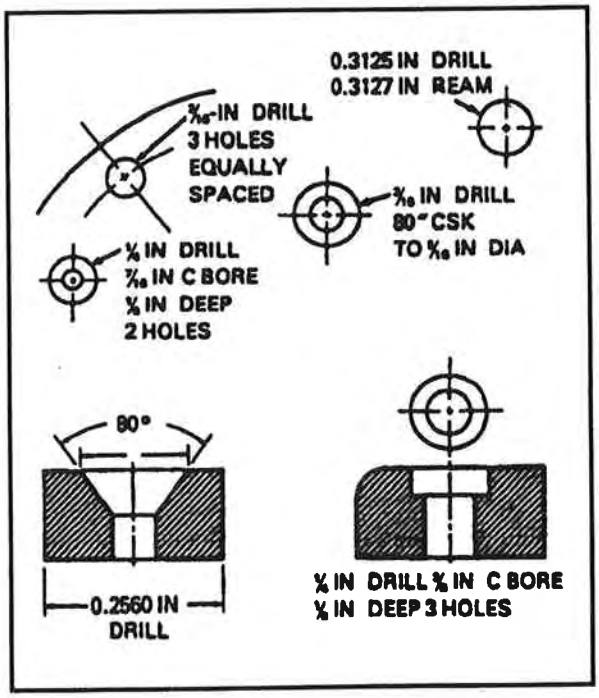

Figure 4-13. Dimensioning holes

Finishes

Dimensions should always show the size of the finished product, regardless of the scale of the drawing. A modified V symbol is used with a number above it to indicate surface finish (Figure 4-14). The

Downloaded from http://www.everyspec.com

numbers tell the machinist how smooth the surface finish should be.

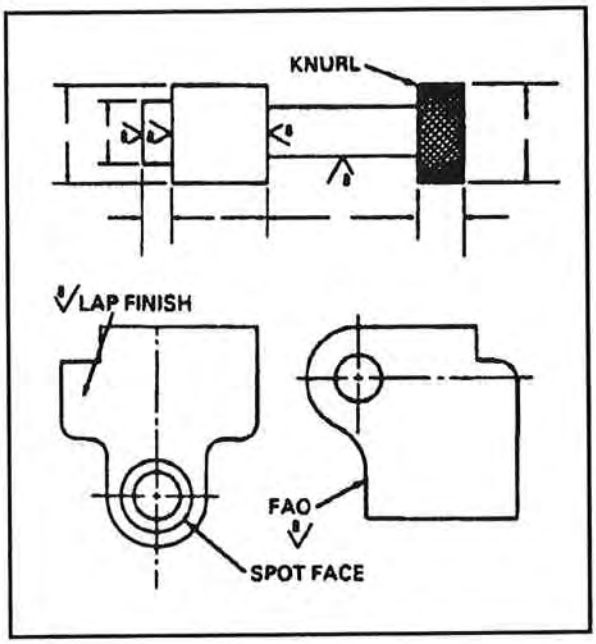

Figure 4-14. Dimensioning finishes

Large or Complicated Objects

Dimensioning a complicated machine or a large object may at first seem very difficult. However, if the object or machine is considered an assembly of small component parts, the task becomes simpler. Information should be given on the drawing concerning the position these component parts will be in in relation to each other. This is done by location dimensioning, which gives the distance between one part and another.

Tolerances

A tolerance is the amount of allowable variation from an accurate measurement. On blueprints it is expressed in decimals, usually to three places. There are several ways to indicate tolerance on a drawing:

- Unilateral method—uses the minimum or maximum measurement as the dimension figure and gives the allowable difference as a plus or minus tolerance (Figure 4-15 [A]).
- Bilateral method—dimension figure indicates the acceptable plus or minus variation (Figure 4-15 [B]).
- Limit dimensioning method—gives both maximum and minimum measurements (Figure 4-15 [C]).

Specific tolerance dimensions may be given or a standard tolerance may apply as indicated in the title block.

Fits

The dimensions for fits stated in the notes signify the amount of clearance allowable between interworking parts. A positive allowance is indicated for a part that is designed to slide or revolve upon another part. A negative allowance is one given for a force fit. Whenever possible, the tolerance and allowances for desired fits should conform to those stated in the American Standard for Tolerances, Allowances, and Gages for Metal Fits. Classes of fits specified in the standard may be indicated on assembly drawings.

DRAWINGS

Figure 4-16 shows two different types of drawings of an object, in this case a block. The topmost drawing

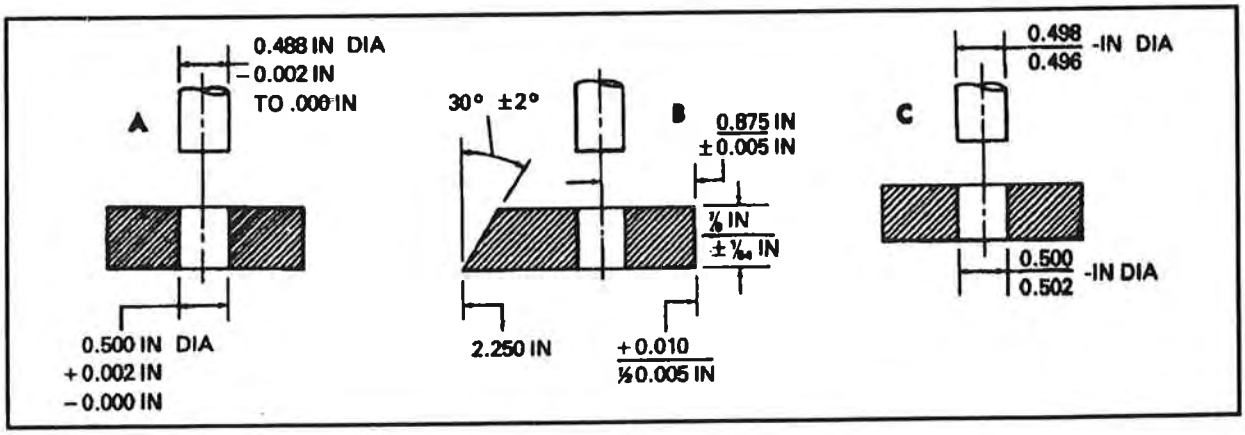

Figure 4-15. Tolerances

Downloaded from http://www.everyspec.com

is a pictorial drawing, so called because it resembles a picture of a block. The other views are called projection drawings because they are all projections of the same block. Although pictorial drawings are more easily understood by people not accustomed to reading drawings, they cannot be used as a specific guide to make or assemble an object because they distort the features somewhat and do not give complete information. They merely illustrate the general shape of an object and its arrangement of parts. However, most aircraft corporations do use pictorial drawings as an additional aid for airframe repairers to visualize the objects or parts represented in projection drawings.

Projection drawings, although initially harder to read and understand, are used almost universally to describe the objects airframe repairers will fabricate. They give all essential information needed to make or assemble the object or parts. They also have a big advantage over pictorial drawings because they show the true shape of all the features.

Note that in the pictorial drawing in Figure 4-16 the front, top, and one side of the block are shown directly connected so that the drawing closely resembles a picture of a block. However, in the three projection drawings, the front, top, and side are shown clearly outlined but not directly connected. In the pictorial view, the angles at the four corners of the front, top, and side of the block appear unequal; whereas in the projected view all angles are equal.

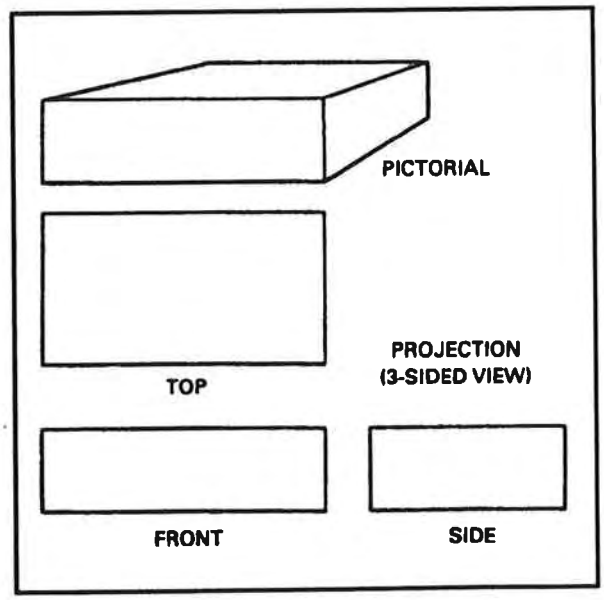

Figure 4-16. Pictorial and projection drawings

Projection Drawings

A projection drawing of an object shows one principal face and one or more adjoining faces not connected to the principal face but drawn directly above or to the left or right of it. To establish the position of like points on an adjoining face, lighter solid lines called projection lines are used that almost connect the adjoining faces with the principal face. However, the projection lines should not actually connect. In a projection drawing, each face is represented as though the viewer were looking directly at it.

The outline of the face as represented on the drawing is called a view. Most projection drawings show at least two faces or views of the object to indicate the three main dimensions: length, width, and thickness. The view showing the front or principal face (front view) shows that part of the object that an observer would see from right in front of it. The front view shows two dimensions: the length from left to right and the thickness from top to bottom.

To give the remaining dimension and width (the distance from the front to the back face of the object), at least one more view must be shown. It may be shown in either the top or side view. To show it in the top view, the draftsperson simply places the top view directly above the front view. The top view shows the shape and dimensions of the top face of the object as someone standing directly in front of the object looking down on it would see it. This view shows the distance or width from the front to the back edge of the top and also the length that would be shown in the front view.

To show width in a side view, the draftsperson makes a side or end view directly to the right or left of the front view. This view shows the shape and dimension of the side or end face as seen when looking directly at it. The side view will show the distance from the front to the back face of an object and the same thickness dimension that is shown in a front view.

Single-View Drawings

Much time and labor can be saved by making only one view of the object and omitting the other two views entirely. The information commonly given on the second and third views is usually given in the notes accompanying a single-view drawing. Figure 4-17 shows a single-view drawing of a reinforcement plate. The plate will be made of sheet stock; the other views will only show the thickness of the stock (0.040 inch)

Downloaded from http://www.everyspec.com

in addition to the length and width, which are given in the single view shown. In a single-view drawing, additional lines cannot be used to show thickness because they would be so close together that they would appear as a single line. Instead, a note stating the thickness of the material is placed on the drawing. Single-view drawings are used only for objects made of thin material, such as sheet stock, and only when they are perfectly flat—never when they are bent or curved.

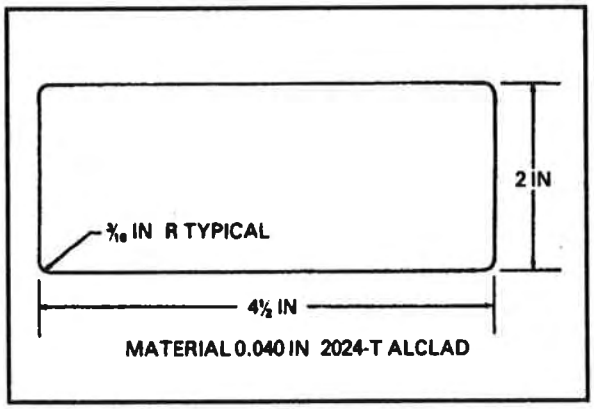

Figure 4-17. Single-view drawing

Surface Drawings

The face of any solid object is called a surface, and the limits of any surface on a drawing are indicated by lines. A surface has two dimensions: length and width, but not thickness. When an edge view of a surface must be shown, a line is used.

Number of Surfaces

Study the object in Figure 4-18(A). It has six surfaces, usually called the front, back, top, bottom, right side, and left side. Now study drawing B. It shows the same object with a groove cut into the top surface. A count shows that there are now 10 surfaces. In drawing C the object is identical to drawing B except for the projection shown on the bottom. A count shows that there are now 14 surfaces. It is easy to see from studying these drawings that the number of surfaces on an object can be increased or decreased by changing the shape of one or more of them.

Number of Views

It is often necessary to draw three views if two views do not show an object's special features full enough for a repairer to fabricate it without additional information. These three views are usually the front, the top, and either the right or left side. Another method is to use dotted lines to represent the features of an object that cannot actually be seen in that view. This conforms to the following essential rules for reading drawings and blueprints:

- Solid lines always represent the outline of visible features.
- Lines consisting of small, uniform dashes always indicate invisible features.

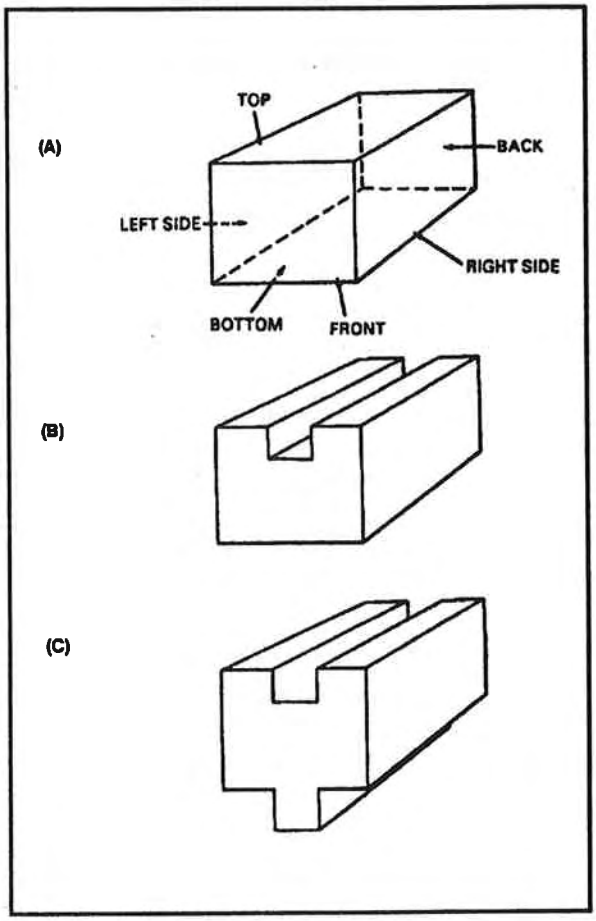

Figure 4-18. Surface drawing

Showing Six Surfaces in Three Views

Figure 4-19 shows the six surfaces of the object with a view of each surface. However, because such a drawing requires much time and effort and a large sheet of paper, all six surfaces are usually represented on a drawing by three views. The draftsperson can do a very satisfactory job by projecting the outline of visible features with solid lines. Such drawings will

Downloaded from http://www.everyspec.com

be more readily understood if the following points are kept in mind:

- The back surface of an object lies directly behind the front surface. It is customary to represent on the front view all features on or lying behind the front surface. Features behind the front surface are shown by dotted lines to indicate that they are not visible. However, if an invisible feature lies directly behind a visible feature, the two features are represented by a solid line.
- In the same manner, the bottom surface lies directly below the top surface of an object. It is customary to represent all features that appear on the bottom surface by dotted lines in the top view to indicate that they are invisible.
- Any surface is described as though the viewer were looking at its center. As with the top and bottom and the front and back views, the right-side view lies directly behind the left-side view and vice versa. With either side view the features that lie behind the surface being described are shown by dotted lines to indicate they are not visible.
- By keeping the above points and the fact that the edge of any surface is represented by a line in mind, objects with many surfaces can be represented on a three-view drawing without any difficulty or confusion.

Working Drawings

A projection drawing is also known as a working drawing. The essential elements of information given in a working drawing must include –

- The size and shape of the object and its parts.
- Specifications for the material.
- How the material is to be finished.
- How the parts are to be assembled.
- Any other information needed to make or assemble the object.

Working drawings are usually divided into three classes: detail, assembly, and installation drawings.

Detail

A detail drawing is a description of a single part of an object that uses lines, notes, and symbols to specify size, shape, material, and manufacturing methods for making or assembling a part or object. Detail drawings are usually fairly simple; several of them can be shown on the same sheet or blueprint in cases where the single part in question is small. Figure 4-20(A) shows a detail drawing.

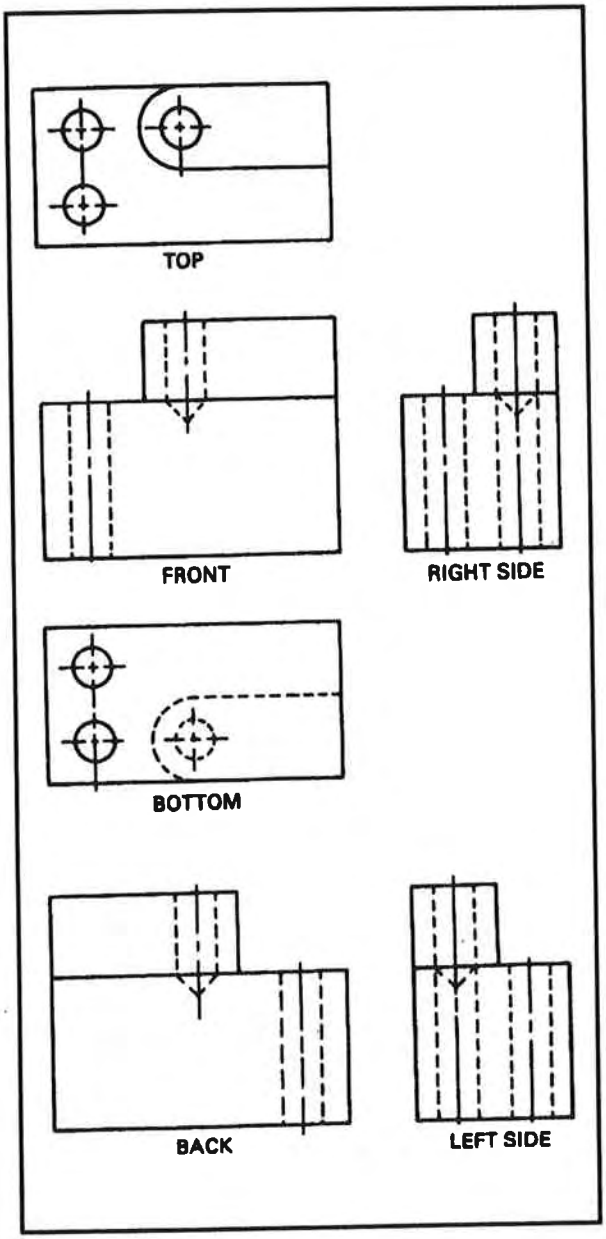

Figure 4-19. Examples of how surfaces are shown

Assembly

An assembly drawing describes an object made up of two or more parts. Drawing B shows the general size and shape of an object. The primary purpose of this

Downloaded from http://www.everyspec.com

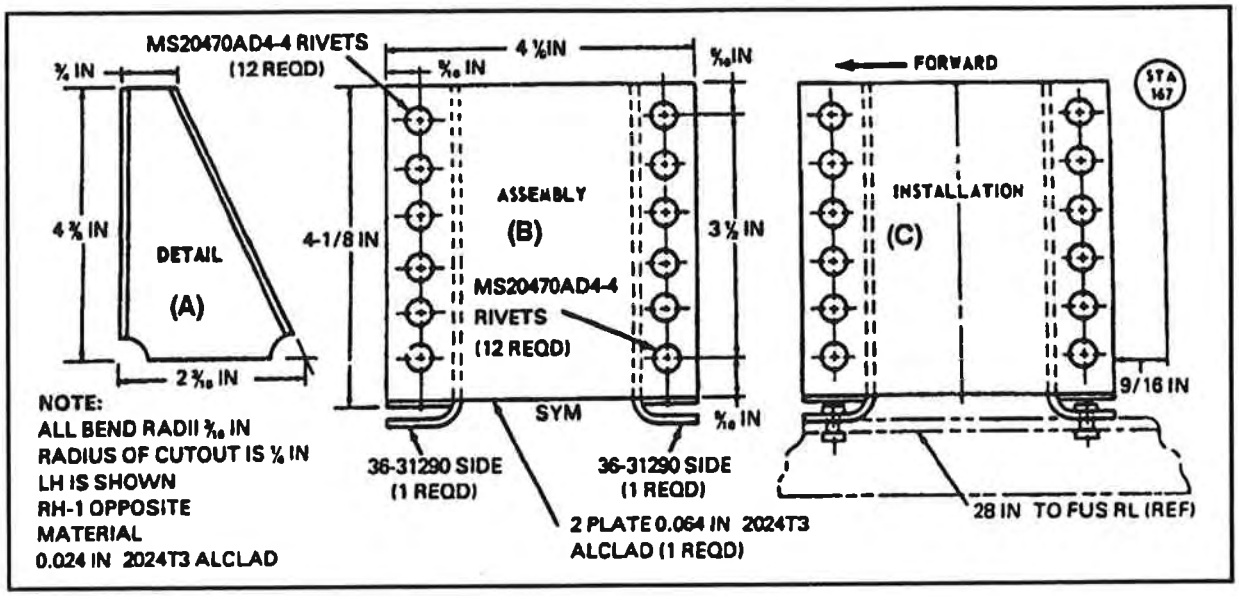

Figure 4-20. Working drawings

drawing is to show the relation of the various parts of the objects to each other. An assembly drawing is usually more complex than a detail drawing; it is often accompanied by detail drawings of various parts.

Installation

An installation drawing specifies the exact location of particular parts in relation to others, including reference dimensions. It includes all information needed to install a part or an assembly of parts in final position in an aircraft. An installation drawing is shown in drawing C.

Sectional Drawings

Dotted lines convey information concerning the interior construction of objects. These lines are adequate for simple drawings, but they usually do not give an accurate description in more complex drawings. Therefore, a method of describing the interior construction of objects by sectional drawings made with solid lines, known as sectional views, has been developed.

A sectional view assumes that the object has been partially cut or broken away and that the part in front of the break has been removed to provide a view of the interior construction at that point. The new exposed surface is shaded by a series of crosshatch lines. When a sectional view is made through a solid object, such as a nut, bolt, shaft, rivet, or similar part whose axis lies in the cutting plane, the solid part is not crosshatched.

There are five types of sectional views:

- Full section—represents the object cut all the way through (Figure 4-21).

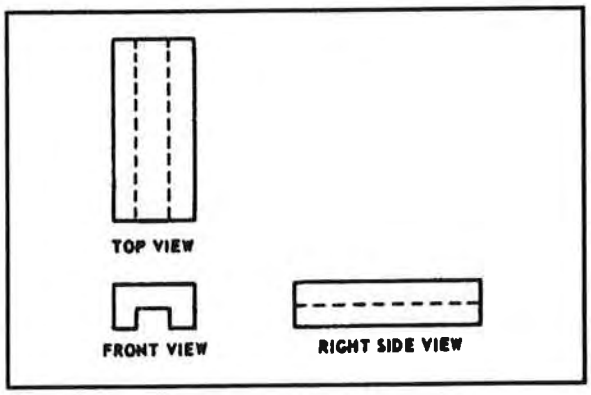

Figure 4-21. Sectional view (full section)

- Half section—represents the object cut only halfway across; shows remaining portion as a regular view; used especially to represent a symmetrical object in which both halves of a full section are identical (Figure 4-22).
- Referenced or labeled section—represents the object with a special line, known as a cutting plane, which shows the position of the intended cut (Figure 4-23); also shows a cross

Downloaded from http://www.everyspec.com

section of the object laid on its edge (Figure 4-23, Section AA). The cutting-plane line usually has arrowheads pointing in the direction in which the section is viewed.

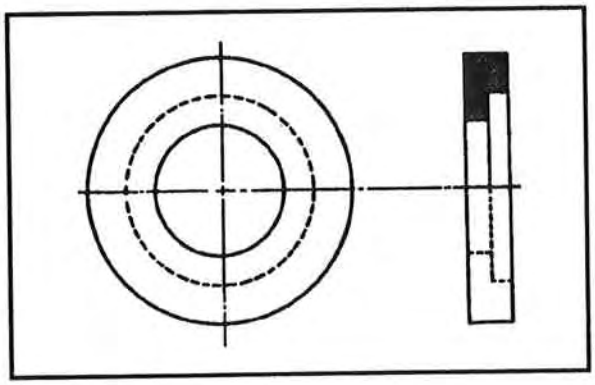

Figure 4-22. Sectional view (half section)

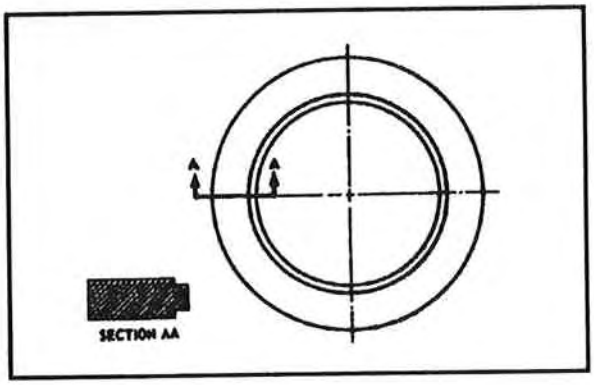

Figure 4-23. Sectional view (referenced or labeled section)

- Revolved section—represents the shape of the object viewed at a particular point on the regular view (Figure 4-24); used when the true shape of a part at a given point is difficult to represent. When it is not possible or convenient to place a revolved section on a drawing in the usual manner, it is placed anywhere on the drawing that is convenient and labeled to correspond to the cutting-plane line.
- Partial section—represents a section on the object at the desired position (Figure 4-25); used when it is not desirable to make a complete sectional view.

VIEWS

A photograph of an object can give a good general impression of its shape and the relationship of its various parts, and it may show the object's exact size.

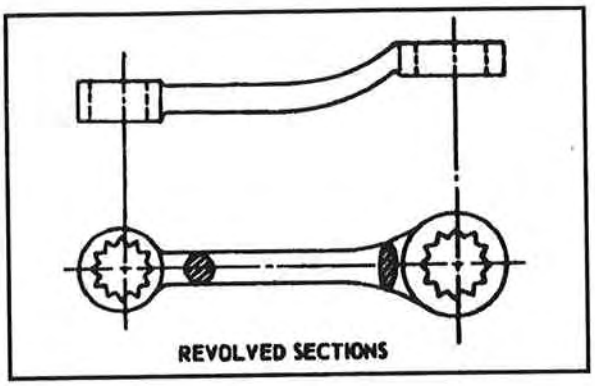

Figure 4-24. Sectional view (revolved sections)

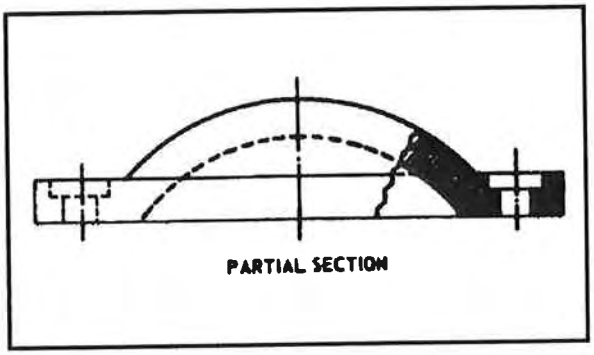

Figure 4-25. Sectional view (partial section)

The value of a photograph compared to a blueprint is that, unlike the latter, a camera brings all visible parts of an object together in a single pictorial view on one plane. It does this by recording images or impressions of objects much as the human eye sees them. However, a photograph is deceptive, just as human eyes are. When you look down a straight stretch of railroad track, your eyes register the rails coming together at a distant point, while in fact they remain parallel. Therefore, the evidence of the human eye cannot always be believed. In the same manner, the camera, too, would record the same false image of the railroad track.

Because the lines on a photograph do not register to an object's actual length and shape, photographs cannot be used when accurate blueprints are required. But photographic prints are valuable visual aids when used to show general appearance, location, and function of parts and assemblies. They are often used to show special characteristics of parts; for example, when operational steps are shown by a series or sequence of photo prints. Photographs can be used as a guide to learn disassembly and

Downloaded from http://www.everyspec.com

reassembly of a part or unit. There are several types of views – photographic and nonphotographic – that can be used for different purposes.

Exploded

Photographs are valuable tools for showing the location of parts using exploded views. The drawing of a stringer repair in Figure 4-26 is an example of an exploded view. Notice that the parts are spread out to show clearly their relation to each other.

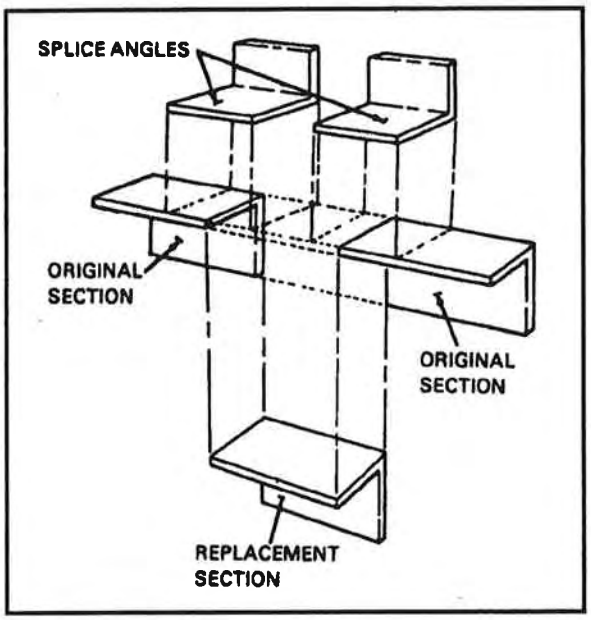

Figure 4-26. Exploded view

Perspective

Perspective views are excellent substitutes for, and can be used in the same manner as, photographs. They provide a picture of a new type of aircraft or machine before it is manufactured. Figure 4-27 shows how lines that are actually parallel on the object would run together if extended on a perspective view drawing. Note the length of the right and left wings. They are actually the same length, but measured on the drawing one is shorter than the other. The perspective view should not be used as a substitute for blueprints in construction or repair work.

Isometric

Isometric views are somewhat like photographs and perspective views, but on an isometric view lines that are actually parallel on the object are also parallel on the drawing. All lines representing horizontal and vertical lines on an object have true length. Vertical lines are shown vertically, but horizontal lines are drawn at an angle of 30° to the horizontal. Vertical and horizontal lines on isometric drawings are known as isometric lines. In Figure 4-28 all lines except A and B have true lengths because they are vertical and horizontal lines on the object. Lines A and B are not isometric lines and their lengths are not true. Isometric views are used in much the same way as other drawings are. In addition, they can be dimensioned so that blueprints of them can be used for making simple objects. Isometric views alone cannot be used in making complicated parts or structures.

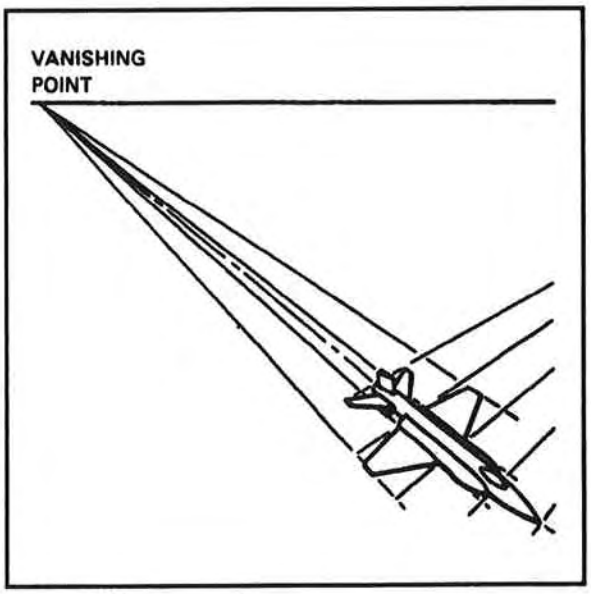

Figure 4-27. Perspective view

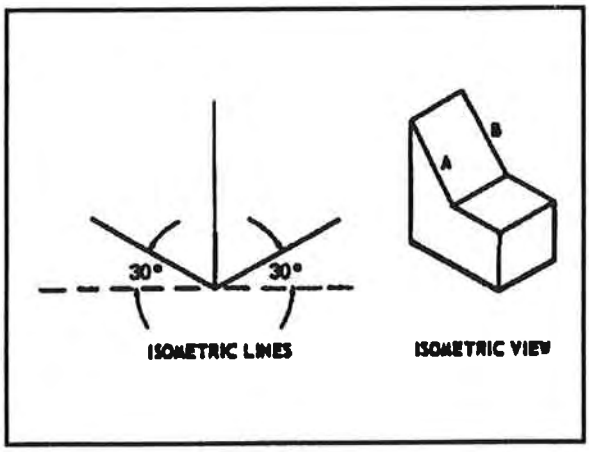

Figure 4-28. Isometric view

Downloaded from http://www.everyspec.com

Orthographic

To present an object in its true proportions, blueprints must provide complete information for construction and repair. Blueprints are copies of mechanically drawn orthographic views (Figure 4-29). These are accurate views that indicate true shapes and sizes. Look at them one view at a time. For example, you can understand a set of steps by examining several views in succession; first, the right-hand or left-hand view, then the view from directly in front or behind, then the view from the top. This is the basic principle of orthographics. The true size and shape of an object's surface can only be seen by looking directly at the surface. The observer's line of sight must be perpendicular to the surface at all points. When these different views of the various surfaces are placed on a drawing, they must be arranged in the right order to show their true relationship.

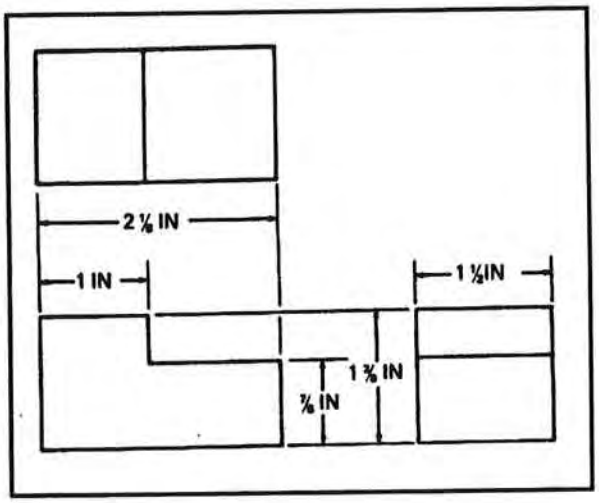

Figure 4-29. Orthographic views

Arrangement of Views

Look at the arrangement of the three views in Figure 4-29. The side view (lower left) was selected as the starting point because it shows the most characteristic feature of the object; in this case, the steps. The front view is projected to the immediate right of the side view. Some of the lines on the front view lie along extensions of the side-view lines. Note that the top view is placed directly above the side view and that some of its lines also lie along extensions of side-view lines. After studying each view, try to visualize the appearance of the object as a whole. Think of the object as stationary and imagine yourself moving around it. This will help relate the blueprint views to the appearance of the object concerned.

Auxiliary Projections

Look directly at the front view in Figure 4-30. Note that the inclined surface appears foreshortened rather than its true size. Now look at the right-side and top views. They show the true width, but the length appears foreshortened. Since none of these views show the true shape of the inclined surface, the draftsperson uses a special view, known as an auxiliary, which is obtained by looking directly at the inclined surface.

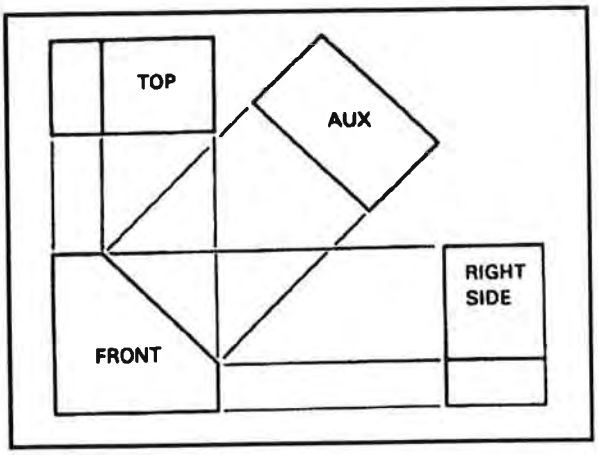

Figure 4-30. Orthographic view (auxiliary projections)

Curved Surfaces

Curved surfaces do not always appear curved in an orthographic drawing because the person viewing the drawing at the top, bottom, or side of an object at a 90° angle to the surface is in fact looking directly at it. Often curved edges are seen, indicating a curved surface behind them. When the surface is seen in another view, it seems broadside and appears flat. Figure 4-31 shows examples of an orthographic drawing of a cone with two views. In example B the side of the cone is shown curved, but the curvature cannot be seen. The bottom edge of this curved side can be seen in example A. Curves in orthographic drawings do not show curved surfaces, but they may indicate a curved surface behind them. The repairer looking at the drawing must be able to find that surface on one of the other views.

BLUEPRINTS

Blueprint is the name given to a specific photocopy process that produces white lines on

Downloaded from http://www.everyspec.com

a blue background. The lines on a drawing that are used to represent an object provide repairers with specific instructions regarding its size and shape. However, they do not give the information needed to construct the object as the draftsperson intended. If the object is to be made correctly, additional information, such as its name and number, the material to be used, and, possibly, other items must be provided. Draftspersons must provide this information without making drawings more complex, while placing it so that it will be interpreted correctly. Usually, this information is indicated in the title block, the change block, or in notes placed so they will not obscure the drawing itself. A blueprint has the following elements of information that repairers must interpret.

NOTE: Obtain a military blueprint to use as a guide when reading the following subparagraphs.

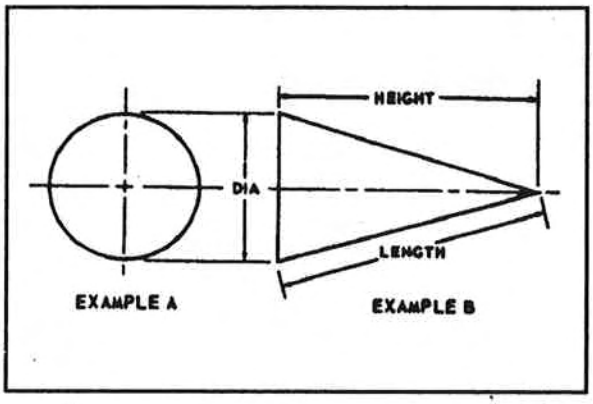

Figure 4-31. Orthographic view (curved surfaces)

Title Block

The headlines on a blueprint are in the title block or box, which is in the lower right-hand corner of all drawings prepared according to military standards. Other blueprints may have the title block somewhere else, but the lower right corner is the usual place for it in civilian blueprints as well. The title block contains the drawing number and all information needed to identify the part or assembly that the blueprint represents. In an approved military blueprint the title block includes the name and address of the government agency that prepared it as well as its title, scale, drafting record, authentication, and date. Title blocks contain the following information categories.

Title

The section of the title block that gives the name of the issuing agency and the name and number of the part or assembly is in the lower right-hand corner. These items are usually in larger, more prominent letters and figures.

Next Assembly

At the right of the title block, just above the number of the part or assembly, are three vertical columns with the following identification items at the base of each column (reading from right to left): Model, Next Assem, and Nr Reg Ship. The outside right-hand column lists the model number of the aircraft requiring the part or assembly shown on the blueprint; the middle column contains the number of the assembly into which the part fits; the left-hand column shows the number of parts required per aircraft.

Drawing Number

All drawings are identified by a drawing number found in a number block in the lower right-hand corner of the title block. It may also be shown in other places; for example, near the top border line, in the upper right-hand corner, or on the reverse side of the drawing at both ends (the number will show if the drawing is folded or rolled). The purpose of the drawing number is to identify a blueprint quickly. If a blueprint has more than one sheet and each sheet has the same number, this information and the number of sheets in the series is included in the number block indicating the sheet number.

Reference and Dash Numbers

Reference numbers in the title block refer to the numbers of other blueprints. When more than one detail is shown on a drawing, dash numbers are used. For example, if two parts are shown in one detail drawing, both would have the same drawing number plus an individual number: 40267-1 and 40267-2. In addition to appearing in the title block, dash numbers may appear on the face of the drawing near the parts they identify. Dash numbers are also used to identify right- and left-hand parts. In aircraft many parts on the left side are like corresponding parts on the right side—only in reverse. The left-hand part is always shown in the drawing. The right-hand part is in the title block. Above the title block will be found a notation; for example, 470204-1LH shown, 470204-2RH opposite. Both parts carry the same number,

Downloaded from http://www.everyspec.com

but the part that is called for is distinguished by a dash number. Some commercial blueprints use odd numbers for left-hand parts and even numbers for right-hand parts.

Scale

The scale is indicated in one space of the title block, which shows the size of the drawing compared to the actual size of the part. The scale is usually shown as 1 inch = 2 inches, 1 inch = 12 inches, and so on. It may be indicated as full size, half size, one-quarter size, and so on. If the draftsperson has used a scale of 1 inch = 2 inches, the object is shown at half its actual size. For a scale of 3 inches = 1 inch, the object is drawn three times its actual size. Very small parts are enlarged and large ones are reduced to show views clearly.

> NOTE: Remember never to measure a drawing. Instead, use the dimensions given on the blueprint.

Heat Treatment

Most metals need some form of heat treatment during a manufacturing process. The title block on a blueprint, drawing, or specification shows the type of heat treatment needed. Often, the temper must be removed from a piece of metal so that it can be machined to specifications and again before being rehardened. Refer to the heat-treatment specification in the title block.

Bill of Material and Specifications

A special box on the drawing may list the pieces of stock needed to make a repair or an assembly of several parts. This is called a bill of material. It states the kind of stock, the size, and the specifications. Many items (such as bolts, screws, turnbuckles, and rivets) have been standardized by the Army, Navy, and Air Force. Each such item has a number with the letters AN or MS in front of it. For example, a wing nut has the number AN350 and a universal-head solid rivet, the number MS20470. Always use the specified material. An engineer selected it because it meets the requirements for a particular job; therefore, it is the best material for that purpose. Only an engineer or a person with the same authority may authorize substitutions when a specified material is not available.

Zone Numbers

Zone numbers on blueprints are similar to the numbers and letters printed on the edges of a map. Their purpose is to help you locate a particular point. Draw horizontal and vertical lines from the letters and numbers specified. The point at which these hypothetical lines intersect is the point you are looking for. Use the same method to locate parts, sections, and views on large blueprints, especially assembly drawings. Locate parts numbered in the title block by finding the numbers in squares along the lower edge. Zone numbers read from right to left.

Station Numbers

A numbering system is used on large aircraft assemblies to locate stations such as fuselage frames. For example, fuselage Frame-Sta 185 indicates that the frame is 185 inches from the reference datum line of the aircraft. This line is determined by the manufacturer and may vary forward or aft of the nose on various types of aircraft. Refer to the specific aircraft technical manual for the location of the reference datum line. The same numbering system is used for wing and stabilizer frames.

Finish Marks

Finish marks are used to indicate surfaces that must be machine-finished. A finished surface has a better appearance and allows a closer fit with adjoining parts than an unfinished one. During the finishing process required limits and tolerances must be observed. Do not confuse machined finishes with paint, enamel, chromium plating, and similar coatings. Drawings prepared according to government specifications require surface roughness symbols. (See MIL-STD-10 for a full explanation of the use of these symbols.)

Tolerance

When a given dimension on a blueprint shows an allowable variation, the plus figure indicates the maximum allowable variation and the minus figure, the minimum one. The sum of the plus and minus allowance figures is called the tolerance. For example, using 0.225 inch + 0.0025 inch - 0.0005 inch, the plus and minus figures indicate that the part will be acceptable if it is not more than 0.0025 inch

Downloaded from http://www.everyspec.com

larger than the 0.255-inch dimension given, or not more than 0.0005 inch smaller than the 0.225-inch dimension. If the plus and minus allowances are the same, they will be presented as 0.225 inch + 0.0025. Allowances may be indicated in either fractions or decimals. When close and accurate dimensions are needed, allowances are expressed in decimals. Fractional allowances are sufficient when close dimensions are not required. In many blueprints, the title block may give standard tolerances of +0.010 inch or ±1/32 inch that will apply throughout the drawing.

Usage Block

This block may be used to identify by drawing numbers the larger unit of which the detail part or assembly shown is a component part. The usage block is usually near the title block, or it may be part of the list in the material block.

Change of Revision Block

This block is on the right-hand side of the blueprint. Usually this space is placed in the upper right-hand corner, but it may be above the title. All changes to the drawing are entered in this block and dated and identified by a number or letter. If a revision block is not used, a revised drawing may be indicated by adding a letter to the original number; for example, 140365-21-A where the letter A indicates the first revision, B the second, and so on.

Notes

Sometimes the person who is to make the object will need additional information for which there is not enough space either in the title or the change block of the blueprint. In these cases the information is placed on the face of the blueprint where it will not interfere with the title block, the change block, or the drawing itself. When the note refers to a specific part, a light line with an arrowhead on its distant end leads from the note to the part. If the note applies to more than one part, it is worded so that the person reading it cannot fail to understand which parts are referred to. If there are several notes, they are generally grouped together and numbered in sequence.

MICROFILM AND MICROFICHE

The practice and technique of recording drawings on microfilm is well established. Microfilm is regular 16-mm or 35-mm film. Because 35-mm film is larger, it provides better reproduction of drawings. Depending on the size of the drawing to be reproduced, a varying number of drawings can be photographed on one reel of 35-mm film. Viewing or reading drawings on a reel of film requires either a portable 35-mm projector or a microfilm reader or viewer. One big advantage of microfilm is that only a small amount of space is required to store several reels, which can duplicate hundreds of drawings. Also, when airframe repairers need to refer to a specific dimension, the reel of microfilm can be placed in a projector, the drawing located, and the dimension read. If it is necessary to study a detail of the drawing or to use the drawing for a long time, an enlarged photographic reproduction can be made using the microfilm as a negative. Microfilms of drawings have many other uses and advantages. However, microfilm is not intended to replace original drawings when they are needed, especially when the originals are modified and kept current over long periods. When drawings are filmed on continuous reels, the reel can be corrected by cutting out superseded drawings and splicing in revised ones. If there are very many corrections, the procedure becomes impractical and is stopped; the drawings are then filmed all over again.

Another method of recording drawings is to film them, cut the film up into individual slides, put the slides into transparent protective envelopes, and arrange them in sequence so that any desired drawing can be found quickly. The disadvantage of this method is that it requires considerable time to convert film into slides. A 70-mm microfilm is now available that enables larger-sized drawings to be reproduced as individual frames or slides; these, in turn, can be inserted in regular paper envelopes and kept in a file. When held up to the light, this large microfilm can be read with the naked eye.

Downloaded from http://www.everyspec.com

CHAPTER 5

FORMING

This chapter contains basic information and techniques for forming aircraft metals, including cutting, bending, stretching, shrinking, and pattern making. It also includes the formula for making parts with critical dimensions. This information should eliminate the trial-and-error approach to forming aircraft parts.

SHAPING AIRCRAFT METALS

The shaping of metal materials and parts required in aircraft construction, either with machine tools, hand tools, or both, is called forming. Forming can be a very simple process, or it can be extremely complicated requiring shapes with complex curvatures. In factories forming is done with large presses or heavy drop hammers equipped with dies; each part is planned by factory engineers who specify the material to ensure the finished part will have the right temper. Factory draftspersons plan the layout of each part.

Forming procedures practiced in the repair shop are almost the direct opposite of those used in the factory. However, both types of procedures have much in common and many of the techniques learned in one of these environments can be applied in the other. Forming is a major concern for airframe repairers. It puts great demands on their skill and knowledge because it normally involves using delicate, light-gage alloys that can easily be made worthless by crude and careless workmanship. A formed part can seem outwardly perfect, but one wrong step in the forming procedure can leave it in a strained condition. Such a defect can hasten fatigue or cause sudden structural failure. Because aluminum and aluminum alloys are the chief metals used in aircraft structures, this chapter deals mostly with the procedures for forming these alloys. However, it also discusses details about stainless steel, magnesium, titanium, and their alloys.

Chem-Milling

Shaping metal by exposure to an etching chemical is called chem-milling. In this process the manufacturer applies an acid to a metal part to lighten it and create specifically designed aircraft parts. Getting satisfactory results with this method is a complex operation. However, the use of specific acids, exposure methods, masking templates, and highly trained personnel can produce structural members that would otherwise be impractical to make. The sequence of chem-milling in relation to mechanical milling is normally determined by part configuration. Usually, chem-milling is completed before the part is formed; this reduces the wasted effort should an error require the part to be scrapped.

Aluminum

Most aluminum parts can be formed without annealing the metal, but if extensive forming operations, such as deep draws (large folds) and complex curves, are planned, the metal should be in the dead soft or annealed condition. While forming some complex parts, operations may have to be stopped and the metal annealed before the forming process can be completed. Alloy 2024 in the annealed condition (2024-0) can be formed into almost any shape by common forming procedures, but it must be solution-heat-treated afterwards. When forming, use the hammer and mallets sparingly and make straight bends on bar folders and cornice brakes. If a part fits poorly or not at all, do not straighten a bend or a curve and try to reform it. Discard the piece of metal and start with a new one. When making layouts, be careful not to scratch aluminum or aluminum alloy sheet metal. A pencil is satisfactory for marking if it is kept sharp. Scribers make scratches that lead to fatigue failure, but they may be used if the marking lines fall outside the finished part; that is, if the scribed line will be in the waste material. Keep bench tops covered with a material such as 1/2-inch felt padding that is hard enough to prevent chips and other foreign matter from becoming embedded in the tops. Make sure to keep bench tops clean and free from chips, filings, and the like. To protect the metals being worked, keep vise jaws covered with small pieces of wood blocks.

Stainless Steel

Stainless steel can be formed by any of the usual methods, but it requires considerably more skill to

Downloaded from http://www.everyspec.com

form than aluminum or aluminum alloys. Stainless steel requires frequent annealing during the forming process because it work-hardens very fast. Always try to press out stainless steel in one continuous motion wherever possible. Airframe repairers should have a thorough knowledge of the basic properties of stainless steel and how to work it.

Make sure the metal does not get unduly scratched or marred. Also, be especially careful when shearing, punching, and drilling this metal. Twice as much pressure is needed to shear or punch stainless steel as to cut mild steel. Keep the shear or punch and die properly adjusted. Too much clearance will cause the metal to be drawn over the edge of the die and become work-hardened. The result will be an excessive strain on the machine.

Use a high-speed drill ground to an included angle of 140° when drilling stainless steel. Some special drills have an offset point, while others have a chip curler in the flutes. When using an ordinary twist drill, grind its point to an angle that is blunter than the standard drill point. Keep the drill speed at about half that required for drilling mild steel, but never exceed 750 revolutions per minute (RPM). Keep a uniform pressure on the drill so that the feed is constant at all times. Drill the material on a backing plate, such as cast iron, that is hard enough to allow the drill to cut all the way through the stock without pushing the metal away from the drill point. Spot the drill before turning on the power and make sure that when the power is turned on, pressure is being exerted. To avoid overheating, dip the drill in water after drilling each hole. When several deep holes must be drilled in stainless steel, use a liquid coolant. A compound made up of 1 pound of sulfur added to 1 gallon of lard oil will serve this purpose. Apply the coolant to the material immediately after starting the drill. High-speed portable hand drills tend to burn the drill points and work-harden the material too much at the point of contact. Because of the temperatures developed by high-speed drill rotation, portable hand drills should not be used. A drill press adjustable to speeds under 750 revolutions per minute is recommended.

Magnesium

While magnesium alloys can usually be fabricated by methods similar to those used on other metals, many details of shop practice for other metals cannot be applied to magnesium. Magnesium alloys are difficult to fabricate at room temperature; therefore, most operations with them are performed at high temperatures. This requires preheating the metal or the dies, or both. Magnesium alloys have excellent machining characteristics, making it possible to use machine tools at maximum speeds with heavy cuts and high-feed rates. Power requirements for machining magnesium alloys are about one-sixth of those for mild steel.

Cutting

Magnesium alloy sheets can be cut by blade shears, blanking dies, routers, or saws. Hand or circular saws are commonly used to cut extrusions to length. Conventional shears and nibblers should not be used to cut magnesium alloy sheets because they produce a rough, cracked edge. Shearing and blanking require close tool tolerances. A maximum clearance of 3 to 5 percent of the sheet thickness is recommended. The top blade of the shears should be ground with an included angle of 45° to 60°. The shear angle on a punch should be 2° to 3° with a clearance angle of 1° on the die. For blanking, the shear angle on the die should be 2° to 3° with a clearance angle of 1° on the punch. Use hold-down pressure when possible. Do not use cold shearing on hard-rolled sheets thicker than 0.064 inch or annealed sheets thicker than 1/8 inch. Shaving improves the characteristic rough, flaky edges of magnesium sheets that have been sheared. This involves removing about 1/32 inch by a second shearing.

Sawing

Sawing is the only method used to cut plate stock more than 1/2 inch thick. Band saw raker-set blades of four- to six-tooth pitch are recommended for cutting plate-stock heavy extrusions. Small and medium extrusions are more easily cut on a circular cutoff saw that has six teeth per inch. Sheet stock can be cut on band saws that have raker-set or straight-set teeth with an eight-tooth pitch. Band saws should be equipped with nonsparking blade guides to eliminate the danger of sparks igniting the filings.

Cold Working

Most magnesium alloys are not often cold-worked at room temperature because they work-harden very fast and are not suited to severe cold forming. Some simple bending operations may be performed on magnesium sheet material, but the radius of bend must be at least 7 times the thickness of the sheet for

Downloaded from http://www.everyspec.com

soft material and 12 times its thickness for hard material. A radius of 2 or 3 times the thickness of the sheet may be used if the material is heated for the forming operation.

Hot Working

Wrought magnesium alloys tend to crack after they are cold-worked; therefore, the best results are obtained by heating the metal to 450°F (232°C) before attempting any forming operations.

Parts formed at lower temperatures are stronger because higher temperatures have an annealing effect on the metal. Hot working has some disadvantages. Heating the dies and the metal is costly and difficult, and magnesium burns easily. Also, overheating causes small molten pools to form within the metal. Both circumstances ruin the metal. Magnesium must be protected with a sulfur dioxide atmosphere while being heated to keep it from burning. Magnesium will ignite when heated to a temperature near its boiling point if oxygen is present. There are also problems in lubricating and handling materials at these high temperatures. However, there are some advantages to hot-working magnesium. Magnesium is more easily formed when hot than other metals; springback is reduced, resulting in greater dimensional accuracy.

WARNING

Never try to extinguish a magnesium fire with water because oxygen in the water supports combustion and will make the fire more intense. Class D is the recommended extinguisher for magnesium fires.

Bending (Short Radii)

Press or leaf brakes can be used to make bends with short radii. Proper bending around a short radius requires the removal of sharp corners and burrs near the bend line. Use a soft carpenter's pencil to make layouts because any marring of the surface can cause fatigue cracks. Use die and rubber methods if bends are to be made at right angles, which makes using a brake more complicated. Roll forming may be done cold on equipment designed for aluminum. In the most common method for forming and shallow-drawing magnesium, a rubber pad is used as the female die. This pad is held in an inverted steel pan that is lowered by a hydraulic press ram. The press exerts pressure on the metal and bends it to the shape of the male die.

Titanium

Titanium was developed to fill the need for a formable, structural sheet material with improved strength-to-weight properties in the intermediate temperature range. Designated as C-110M, titanium is used in primary structural members—especially those that receive heat from the engine and from aerodynamic heating. It is formed commercially by means of brakes, stretch formers, hydropresses, drop hammers, and the like and can be deep-drawn, cupped, beaded, dimpled, or punched. Heating the titanium sheet to 932°F (500°C) allows difficult forming operations to be performed more easily and reduces springback. To relieve stress, heat titanium for 1 hour at 1382°F (750°C) and cool it uniformly. The titanium sheet can be satisfactorily spot- and seam-welded. Surfaces must be cleaned completely before welding. Titanium may be welded to itself by flash butt and inert arc. Fusion welds must be completely surrounded by an inert gas to prevent oxygen-nitrogen pickup. Brazing and soldering techniques have not been fully developed for titanium.

CAUTION

Keep filings, shavings, and chips from machining operations in a covered metal container to prevent any danger of combustion.

MEASUREMENT TERMS

Airframe repairers need to know measurement terms used in forming and how they affect the forming process (Figure 5-1 shows these terms in relation to an example of a folded [bent] object):

- Radius of bend—measurement on the inside of the metal's curved portion; term used during the process of forming a bend in sheet metal. Unless otherwise stated, the radius of bend is always to the inside of the bent angle.
- Bend allowance—amount of sheet metal needed to make a bend over a given inside radius. In making folds or bends in sheet metal, the necessary allowance for expansion and contraction of the material at the bend must be made. The outside portion of the metal tends to stretch during this process,

Downloaded from http://www.everyspec.com

while the inside portion tends to compress. Less metal is required to form a curved angle or area than to form a square angle or area. In each case you must know how to lay out and cut the sheet metal. Bend allowance depends on four factors:

- Degree of bend.
- Radius of bend.
- Thickness of metal.
- Type of metal.

- Mold point – point of intersection of the mold lines extending from the outside surface edges of the material at each end of the bend. The starting point for these lines is the bend tangent line.
- Bend tangent lines – lines on the outside surface where the metal starts to bend and where the bend ends. The base measurement equals the outside dimensions of a formed part.
- Setback – the sum of the radius of the bend and the thickness of material, which is subtracted from the overall measurement to get the final layout dimensions. In forming curves or angles on pieces of sheet metal, the start and end points of the bend must be known to determine the length of the flat stock.
- Degree of bend – used to identify the formed position of the material from the parallel position; the degree of bend or fold can be anything from 1° up to and including 360°. The shape could be an angle or a curve. Ducting, tubing, and piping are examples of processes that require a 360° bend.
- Minimum bend radius – the sharpest curve or bend that can be applied to a piece of material in the area of the bend. If the radius of bend is too small, stresses and strains will weaken the metal and can result in cracking. The minimum bend radii for the various thickness ranges of metal are specified in Table 5-1. Factors affecting the radius are metal composition, thickness, and temper conditions. Annealed sheets can be bent to a radius that is fairly sharp compared to harder metals. Aluminum alloys, such as 2024-T3 and 2024-T4, require a fairly large radius.
- Brake or sight line – a mark on a flat sheet that is aligned with the nose of the cornice brake's radius bar. The mark serves as a guide in the bending process. Figure 5-2 shows the brake or sight line in relation to the position of the material and the radius bar. The brake line can be pinpointed by measuring out a distance of one radius from the bend tangent line that is to be inserted under the nose of the cornice brake or against the radius forming block.

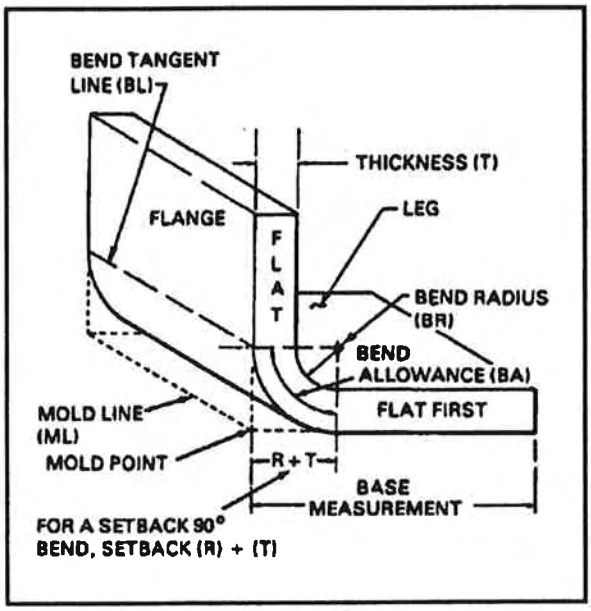

Figure 5-1. Bend allowance terms

BENDS OR FOLDS

It is the accepted practice in aircraft construction and repair to form flanges or bends with a radius that will leave the shape of the formed material as strong as that of the original shape. Sheet metal that has been formed to a sharp angle is not as strong as it is when shaped with a large radius. The sharply bent piece will have stress concentrated at the bend. Even though most aircraft sheet metals are malleable, they will crack if bent too sharply. Nor can all aircraft metals be bent to the same radius. The minimum radius depends on both the temper and thickness of the metal. The radius of the bend is usually proportional to the thickness of the material. The type of material is also important: if it is soft, it can be bent very sharply; if it is hard, the radius of bend and the bend allowance will have to be greater. The degree of bend affects the overall length of the metal; its thickness affects the radius of bend. When bending metal to exact dimensions, determine the length of the neutral line so that enough material can be

Downloaded from http://www.everyspec.com

allowed for the bend. To save you time in making calculations of bend allowances, formulas and a table (chart) have been established as described below.

Bend Formulas

Engineering experiments have determined that the bend allowance for a 360° bend is 2π (R + 1/2T), where:

R = radius

T = thickness of material

To use this formula for any degree of bend, you must find the bend allowance for 1°. The bend allowance for a 1° bend would be:

$$\frac{2\pi(R + 1/2T)}{360} = BA\ 1°$$

Although this formula is correct in theory, it is inaccurate because the neutral axis is not exactly in the center of the material. Further experiments determined that accurate results could be obtained by changing the formula slightly. The accurate formula for all bends ranging from 1° to 180° is:

BA = 0.01743R + 0.0078T)N, where:

BA = bend allowance

R = desired bend radius

T = thickness of material

N = number of degrees of bend

Example: Find the bend allowance for a 90° bend that has a radius of 0.250 inch for material 0.050 inch in thickness.

Table 5-1. Minimum allowable bend radii

ANNEALED STEEL SHEET			ANNEALED ALUMINUM ALLOY		HEAT-TREATED ALUMINUM ALLOY	
			MINIMUM RADIUS		MINIMUM RADIUS	
USS* GAGE (IN)	MINIMUM RADIUS (IN)	GAGE (IN)	STANDARD (IN)	SPECIAL (IN)	STANDARD (IN)	SPECIAL (IN)
0.025		0.016				
0.031	1/32	0.020	1/64	---	3/32	3/64
0.038		0.025				
0.050		0.032	1/32	1/64	1/8	1/16
0.063	1/16	0.040				
0.078		0.051	1/16	1/32	3/16	3/32
0.094	1/8	0.064	1/8	1/16	1/4	1/8
0.125		0.072	1/8	3/32	1/4	---
0.188	3/16	0.081	1/8	3/32	9/32	---

*United States Standard

NOTE: The special minimum bend radii for aluminum alloy sheet may be used in cases where the bend is 90° or less; for example, where clearance for rivet or bolt heads or attached parts is necessary.

Downloaded from http://www.everyspec.com

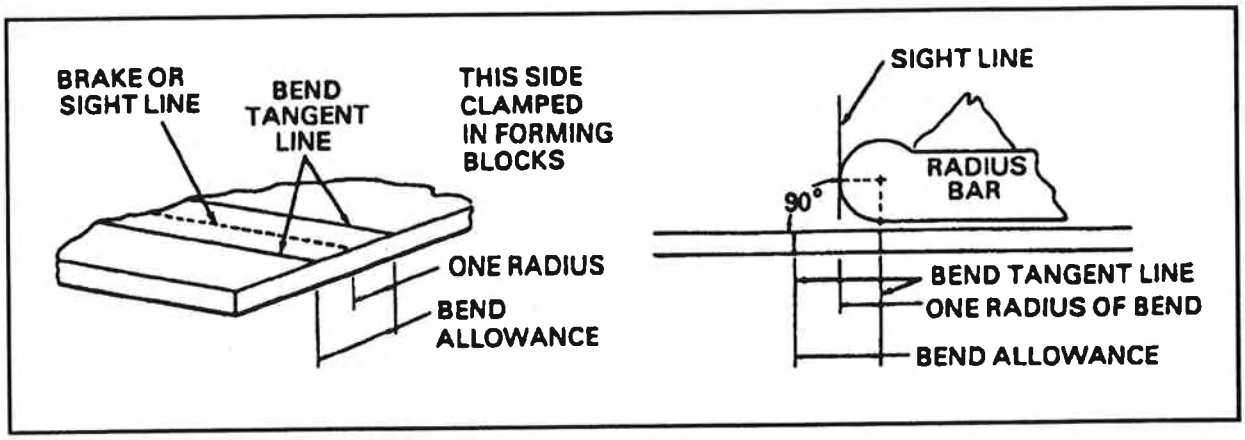

Figure 5-2. Brake or sight line

Substituting in the formula would give:

$$BA = (0.01743R + 0.0078T)N$$

$$BA = (0.01743 \times 0.250 \times 0.0078 \times 0.050) \times 90$$

$$BA = (0.0043575 + 0.00039) \times 90$$

$$BA = 0.0047475 \times 90$$

$$BA = 0.0047475 \times 90 = 0.427275$$

$$BA = 0.427$$

Bend Allowance Table

The radius of bend is shown in Table 5-2 as a decimal fraction on the top line in each box. The bend allowance is shown directly below the radius figure. In each case, the top number is the bend allowance for a 90° angle; the lower number is for a 1° angle. Thickness of material is given in the left-hand column of the table.

Example: Find the bend allowance when the sheet thickness is 0.050 inch, the radius of bend is 1/4 (0.250) inch, and the bend is up to 90°. Reading across the top of the table, find the column for a radius of bend of 0.250 inch. Then find the block in this column opposite the gage of 0.050 in the column at the left. The upper number in the block is 0.427, the correct bend allowance in inches for a 90° bend. If the bend will be other than 90°, the lower number in the block (the bend allowance for 1°) must be used and the bend allowance must be computed. In this case, the lower number is 0.004748; therefore, if the bend is to be 120°, the total bend allowance in inches will be 120 x 0.004748, or 0.570 inch.

Setback

When folding or bending metal, it is often necessary to know the exact start and end points of the fold or bend. To accurately locate these points, you must determine both the bend allowance and the length of the flat portions. To determine the length of the flats, find the setback and then subtract it from the base measurement. Two factors are important in determining setback: the radius of bend and the thickness of the sheet metal, or R and T (refer back to Figure 5-1). Figure 5-3 shows that the setback equals the distance from the bend tangent line to the mold point and that it is the same for the vertical flat and the horizontal flat.

Setback Formula

Setback for all 90° bends can be calculated from the formula:

$SB = R + T$, where:

SB = setback

R = radius

T = thickness of metal

Example: For a piece of 0.032-inch thick material that is to be bent to a radius of 1/8 (0.125) inch, SB = 0.125 + 0.032 = 0.157 inch. When setback is subtracted from the base measurement, the remainder will be the length of the first flat, which may be laid out on the sheet metal. Next, calculate the bend allowance. Then add this value to the length of the flat; the sum of the two values is the total length of metal required for the first flat and the bend.

Downloaded from http://www.everyspec.com

Table 5-2. Bend allowance table

R / T	3/32 0.094	1/8 0.125	5/32 0.156	3/16 0.188	7/32 0.219	1/4 0.250
0.020	0.161 0.001792	0.210 0.002333	0.259 0.002874	0.309 0.003433	0.358 0.003974	0.406 0.004515
0.025	0.165 0.001835	0.214 0.002376	0.263 0.002917	0.313 0.003476	0.362 0.004017	0.410 0.004558
0.032	0.170 0.001886	0.218 0.002427	0.267 0.002968	0.317 0.003526	0.366 0.004067	0.415 0.004608
0.040	0.176 0.001952	0.224 0.002493	0.273 0.003034	0.323 0.003593	0.372 0.004134	0.421 0.004675
0.050	.182 0.002024	0.231 0.002569	0.280 0.003113	0.329 0.003658	0.378 0.004203	0.427 0.004748
0.063	0.191 0.002125	0.240 0.002670	0.289 0.003215	0.338 0.003760	0.387 0.004304	0.436 0.004849
0.071	0.197 0.002188	0.240 0.002670	0.295 0.003277	0.344 0.003822	0.393 0.004367	0.442 0.004911
0.080	0.203 0.002258	0.252 0.002803	0.301 0.003347	0.350 0.003892	0.399 0.004437	0.448 0.004982
0.090	0.210 0.002336	0.259 0.002881	0.308 0.003425	0.357 0.003970	0.406 0.004515	0.455 0.005060
0.100		0.266 0.002959	0.315 0.003503	0.364 0.004048	0.413 0.004593	0.462 0.005138
0.125		0.284 0.003154	0.333 0.003698	0.382 0.004243	0.431 0.004788	0.480 0.005333

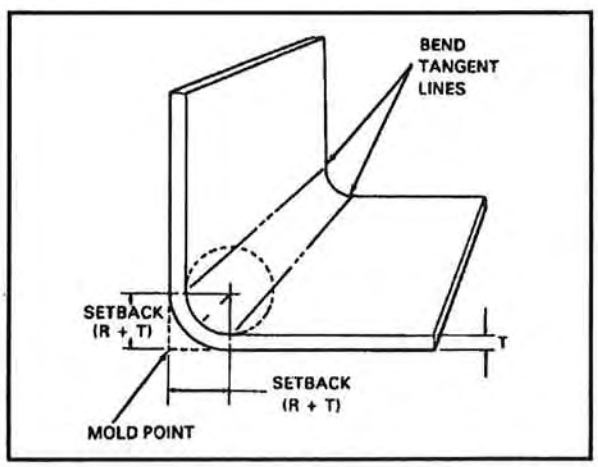

Figure 5-3. Setback (90° bend)

K-Chart

To calculate setback for all bends other than 90°, consult a setback K-chart (Table 5-3) to find a value called K that must be substituted in the formula SB = K(R + T). For example, the K value for a 120° bend is 1.7320.

Brake or Sight Line

The brake or sight line is a mark on a flat sheet that is aligned with the nose of the cornice brake's radius bar. It serves as a guide in the bending process. Figure 5-4 shows the brake or sight line in relation to the position of the material and the radius bar. The brake line can be pinpointed by measuring a distance of one radius from the bend tangent line that is to be

Downloaded from http://www.everyspec.com

inserted under the nose of the cornice brake or against the radius forming block.

Table 5-3. Setback (K-chart)

Angle (°)	K-Value	Angle (°)	K-Value
1	0.00873	41	0.37388
2	0.01745	42	0.38386
3	0.02618	43	0.39391
4	0.03492	44	0.40403
5	0.04366	45	0.41421
6	0.05241	46	0.42447
7	0.06116	47	0.43481
8	0.06993	48	0.44523
9	0.07870	49	0.45573
10	0.08749	50	0.46631
11	0.09629	51	0.47697
12	0.10510	52	0.48773
13	0.11393	53	0.49858
14	0.12278	54	0.50952
15	0.13165	55	0.52057
16	0.14054	56	0.53171
17	0.14945	57	0.54295
18	0.15838	58	0.55431
19	0.16734	59	0.56577
20	0.17633	60	0.57735
21	0.18534	61	0.58904
22	0.19438	62	0.60086
23	0.20345	63	0.61280
24	0.21256	64	0.62487
25	0.22169	65	0.63707
26	0.23087	66	0.64941
27	0.24008	67	0.66188
28	0.24933	68	0.67451
29	0.25862	69	0.68728
30	0.26795	70	0.70021
31	0.27732	71	0.71329
32	0.28674	72	0.72654
33	0.29621	73	0.73996
34	0.30573	74	0.75355
35	0.31530	75	0.76733
36	0.32492	76	0.78128
37	0.33459	77	0.79543
38	0.34433	78	0.80978
39	0.35412	79	0.82434
40	0.36397	80	0.83910

Downloaded from http://www.everyspec.com

Table 5-3. Setback (K-chart) (continued)

Angle (°)	K-Value	Angle (°)	K-Value
81	0.85408	121	1.7675
82	0.86929	122	1.8040
83	0.88472	123	1.8418
84	0.90040	124	1.8807
85	0.91633	125	1.9210
86	0.93251	126	1.9626
87	0.80978	127	2.0057
88	0.96569	128	2.0503
89	0.98270	129	2.0965
90	1.0000C	130	2.1445
91	1.0176	131	2.1943
92	1.0355	132	2.2460
93	1.0538	133	2.2998
94	1.0724	134	2.3558
95	1.0913	135	2.4142
96	1.1106	136	2.4751
97	1.1303	137	2.5386
98	1.1504	138	2.6051
99	1.1708	139	2.6746
100	1.1917	140	2.7475
101	1.2131	141	2.8239
102	1.2349	142	2.9042
103	1.2572	143	2.9887
104	1.2799	144	3.0777
105	1.3032	145	3.1716
106	1.3270	146	3.2708
107	1.3514	147	3.3759
108	1.3764	148	3.4874
109	1.4019	149	3.6059
110	1.4281	150	3.7320
111	1.4550	151	3.8667
112	1.4826	152	4.0108
113	1.5108	153	4.1653
114	1.5399	154	4.3315
115	1.5697	155	4.5107
116	1.6003	156	4.7046
117	1.6318	157	4.9151
118	1.6643	158	5.1455
119	1.6977	159	5.3995
120	1.7320	160	5.6713

Downloaded from http://www.everyspec.com

Table 5-3. Setback (K-chart) (continued)

Angle (°)	K-Value	Angle (°)	K-Value
161	5.9758	171	12.706
162	6.3137	172	14.301
163	6.6911	173	16.350
164	7.1154	174	19.081
165	7.5957	175	22.904
166	8.1443	176	26.636
167	8.7769	177	38.138
168	9.5144	178	57.290
169	10.385	179	114.590
170	11.430	180	*Infinite/1.000

*DEPENDING ON HOW PART IS MEASURED-FROM WHAT POINT IN RELATION TO BEND.

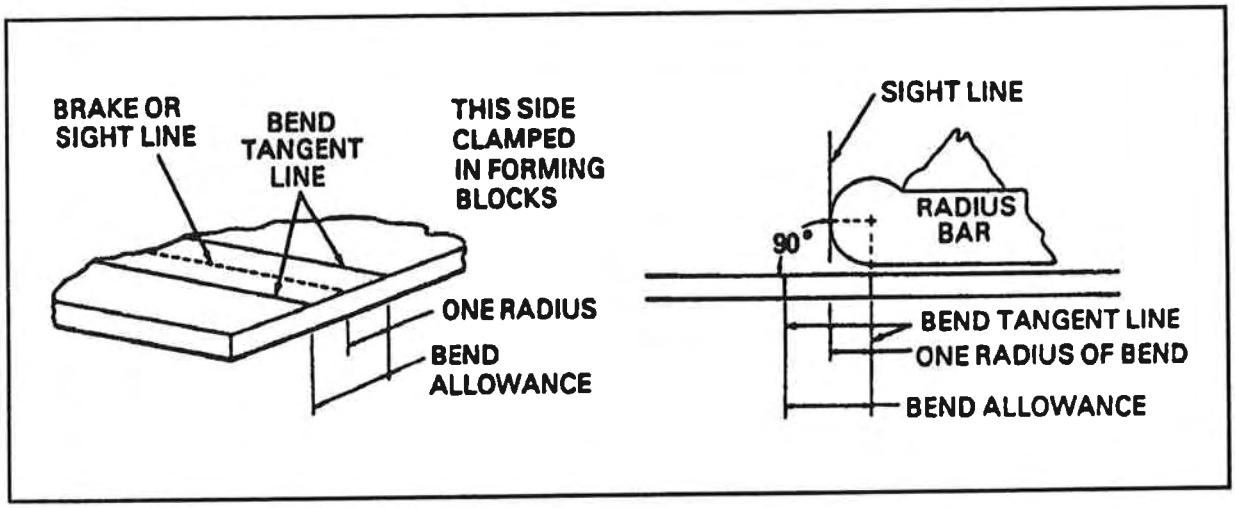

Figure 5-4. Brake or sight line

PATTERNS OR TEMPLATES

Flat Pattern Layout

Often airframe repairers must make a structural part so that it fits directly over or into an existing part. The dimensions of the new part are critical. Consider the following example (refer to Figure 5-5).

The problem is to lay out a flat pattern of a channel in which the left flange is 1 inch high (A), the web is 2 inches high (B), and the right flange is 1 1/4 inch high (C). The material is 0.050 inch thick and the radius of bend, 3/16 inch. The degree of bend is 90°. These are called given or finish dimensions; that is, the finished part should measure to these dimensions.

NOTE: Calculate setback and bend allowance in decimal form. Then convert to fractions (nearest sixty-fourth inch) for use on layout. Use decimal conversion chart (refer to Table 5-4).

Downloaded from http://www.everyspec.com

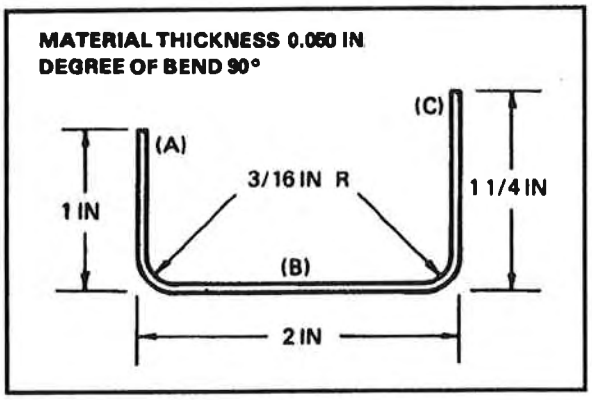

Figure 5-5. Finish dimensions

First Flat

Determine the setback to establish the distance of the flats. The setback for the first bend is R + T, or 0.188 + 0.050 = 0.239 inch. The first flat (A) is equal to the overall dimension minus the setback, or 1.000 - 0.238 = 0.762 inch. Then find the bend allowance from Table 5-2 for the first bend (BA = 0.329 inch). Convert 0.762 to 49/64 and 0.329 to 21/64. Lay out these measurements (Figure 5-6) to determine where each bend begins and ends.

Table 5-4. Decimal conversion chart

DECIMAL EQUIVALENTS									
Fraction	16th	32d	64th	Decimal	Fraction	16th	32d	64th	Decimal
			1	.015625				33	.515625
		1	2	.03125			17	34	.53125
			3	.046875				35	.546875
	1	2	4	.0625		9	18	36	.5625
			5	.078125				37	.578125
		3	6	.09375			19	38	.59375
			7	.109375				39	.609375
1/8	2	4	8	.125	5/8	10	20	40	.625
			9	.140625				41	.640625
		5	10	.15625			21	42	.65625
			11	.171875				43	.671875
	3	6	12	.1875		11	22	44	.6875
			13	.203125				45	.703125
		7	14	.21875			23	46	.71875
			15	.234375				47	.734375
1/4	4	8	16	.250	3/4	12	24	48	.750
			17	.265625				49	.765625
		9	18	.28125			25	50	.78125
			19	.296875				51	.796875
	5	10	20	.3125		13	26	52	.8125
			21	.328125				53	.828125
		11	22	.34375			27	54	.84375
			23	.359375				55	.859375
3/8	6	12	24	.375	7/8	14	28	56	.875
			25	.390625				57	.890625
		13	26	.40625			29	58	.90625
			27	.421875				59	.921875
	7	14	28	.4375		15	30	60	.9375
			29	.453125				61	.953125
		15	30	.46875			31	62	.96875
			31	.484375				63	.984375
1/2	8	16	32	.500	1	16	32	64	1.000

Downloaded from http://www.everyspec.com

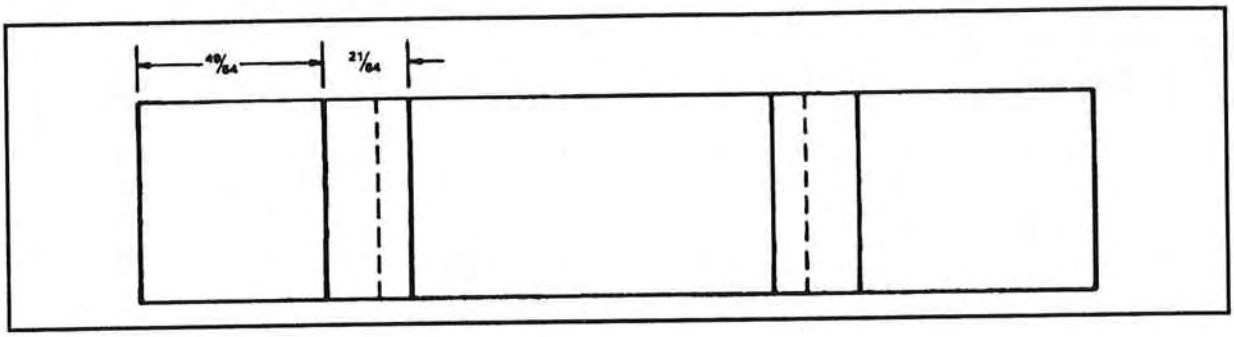

Figure 5-6. Layout of first flat (A)

Second Flat

Next lay out the second flat (B), which is equal to the overall dimension minus the setback at each end, or 2.000 - (0.238 + 0.238) = 1.524 inch. The bend allowance for the second bend is the same as for the first bend (0.329 inch). Convert 1.522 to 1 34/64 and 0.329 to 21/64. Mark off this distance (Figure 5-7).

Locating Brake or Sight Line

Locate the brake or sight line by measuring one bend radius from the bend tangent line that will be placed under the brake jaws or between the forming blocks. For small parts this is usually the flange that is clamped in the brake.

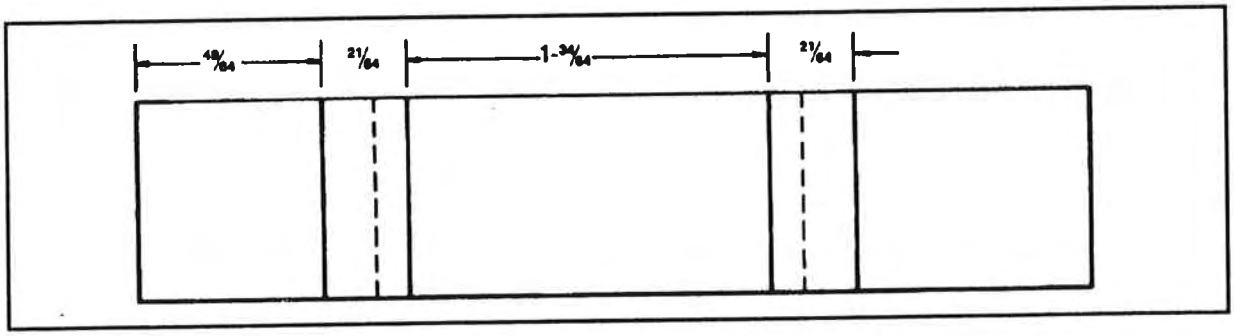

Figure 5-7. Layout of second flat (B)

Third Flat

This flat (C) is equal to the overall dimension minus the setback, or 1.250 - 0.239 = 1.012 inch. Convert 1.012 to 1 1/64. Lay out this measurement (Figure 5-8).

To locate brake or sight-line working dimensions:

- Flat (A)—add the dimensions of the flat and the bend radius. The sum will be the dimension from the edge of the metal to the bend sight line (49/64 + 12/64 = 61/64) (Figure 5-9).

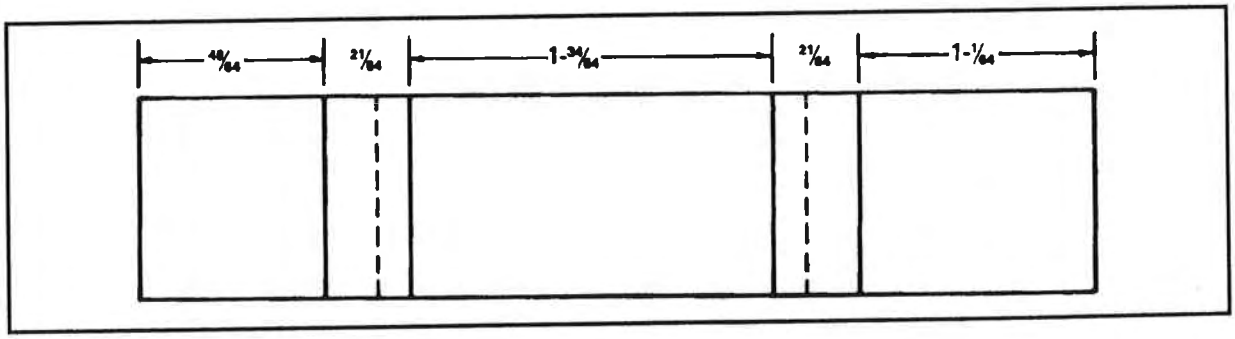

Figure 5-8. Layout of third flat (C)

Downloaded from http://www.everyspec.com

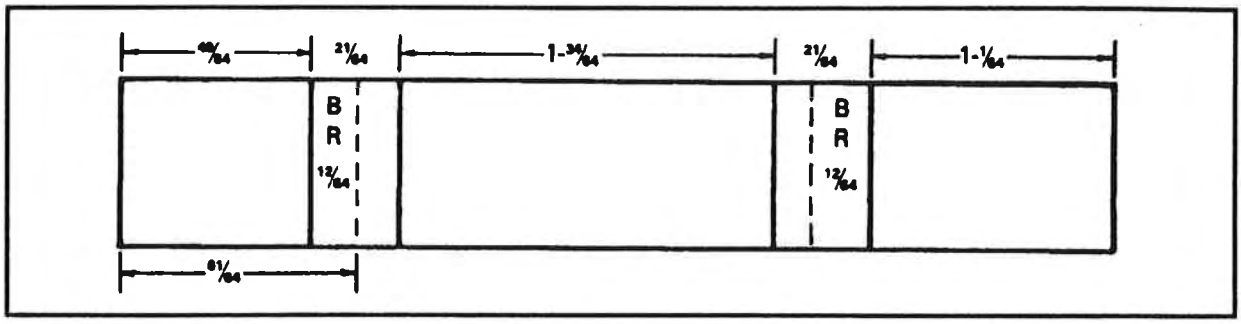

Figure 5-9. Locating brake or sight line of flat (A)

- Flat (B)—first subtract the bend radius from the bend allowance at each end of the flat (BA 21/64 - BR 12/64 = 9/64; BA 21/64 - BR 12/64 = 9/64). This dimension is called the remainder of bend allowance. Then add flat (B) and the remainder of the bend allowance at both ends (1 34/64 + 9/64 + 9/64 = 1 52/64) (Figure 5-10).

Transfer the brake or sight line working dimensions to the metal by starting at one edge and at the end of the metal. Measure 61/64 inch and make a pencil mark; this is the brake or sight line. Measure over from this mark 1 52/64 inch; this is the second brake or sight line. Next measure over from this mark 1 22/64 inch and mark this as the cut line. Repeat this procedure from the same edge at the opposite end of the metal. Cut off all excess metal past the cut line.

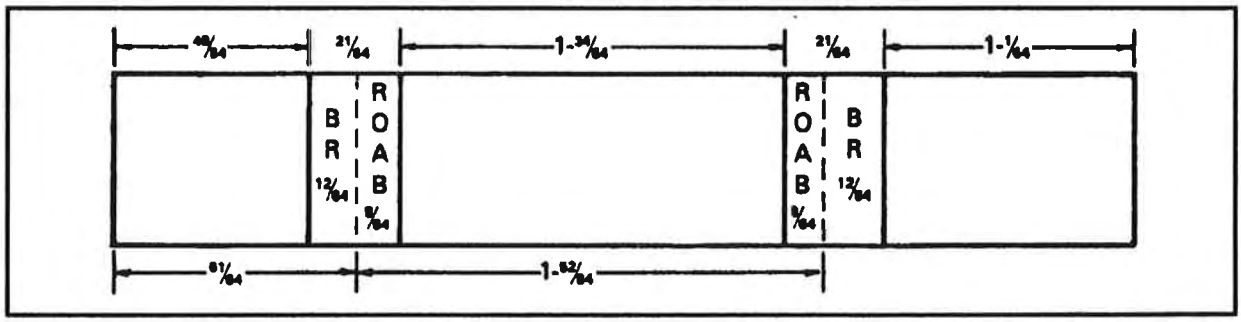

Figure 5-10. Locating brake or sight line of flat (B)

- Flat (C)—add the flat dimension and the bend radius (1 1/64 + 21/64 = 1 22/64) (Figure 5-11).

After the layout is made on the material, the metal may be bent by cornice brake, bar folder, or forming blocks. In each case the radius of the part over which the metal is to be bent must be the same as the radius required. Various mandrels or dies can be used to perform this work. Accurate results can be obtained

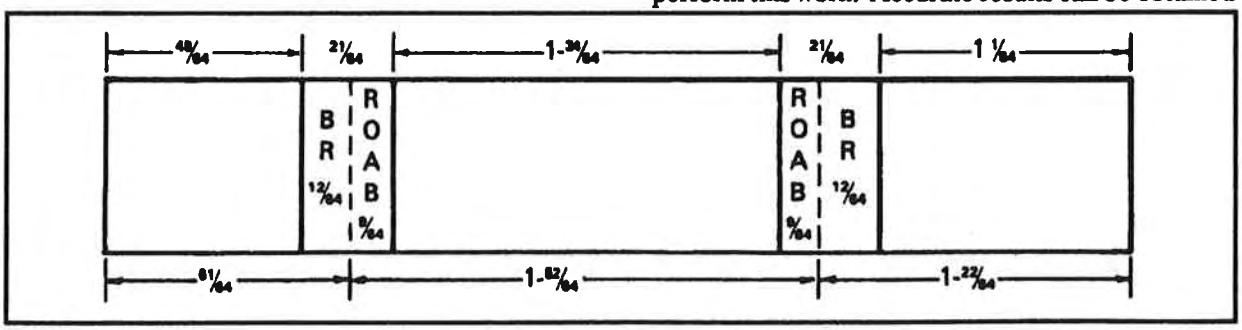

Figure 5-11. Locating brake or sight line of flat (C)

Downloaded from http://www.everyspec.com

for the cornice brake by using mandrels or dies (sometimes called radius bars), which may be attached to the lower side of the brake clamping jaw. If radius bars are not available, form pieces of sheet aluminum to the radius desired and clamp them over the brake jaw. Regardless of the method of bending used, the metal must be held so that the bend begins at the bend tangent line. Figure 5-12 shows the location of the bend line in relation to the mandrel and brake jaw. Make sure that the metal sheet is placed so that the nose of the brake will fall directly over the bend line. Refer to Figure 5-13.

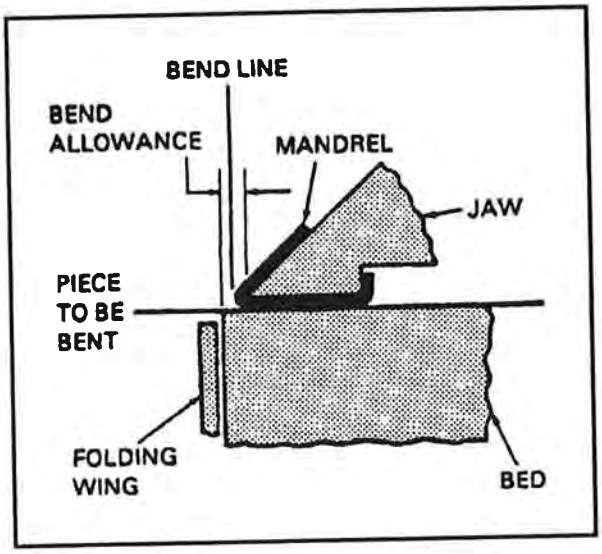

Figure 5-12. Locating bend line in the brake

Duplicating Patterns

Sometimes aircraft structural repairers will have to duplicate parts without the aid of blueprints. This requires taking measurements directly from the original or from a duplicate format. Most parts that can be manufactured in a field environment have straight-line bends with some radius flanges, from which it is fairly simple to take measurements. TM 5-581B contains the best instructions for drawing flat layouts of these parts. The recommended method of laying dimensions on the metal for cutout and fabrication of the part requires a thorough knowledge of the layout tools and drafting techniques described in Chapter 4 of this manual.

SHRINKING AND STRETCHING ALUMINUM

All forming revolves around shrinking and stretching. If a formed or extruded angle is to be curved, one leg may be stretched or the other leg shrunk—whichever will make the part fit the job. In bumping, the material in the bulge is stretched to make it balloon; in joggling, the material between the joggles is stretched. Material on the edge of lightening holes is often stretched to form a beveled reinforcing ridge around them.

STRAIGHT-LINE BENDS

The cornice brake and the bar folder are ordinarily used to make straight bends. However, these machines may not always be available; airframe repairers should therefore know how to hand-form folds or bends. This can be done in the following manner using wooden or metal bending blocks.

Layout

The material should be laid out as required and the blank piece cut out. Clamp the material rigidly along the bend line between two wooden forming blocks by placing it in a vise and holding it. The wooden forming block should have one edge rounded as needed for the desired radius of bend. It should also be curved slightly beyond the 90° point to allow for springback.

Work

With the metal sheet held firmly in the vise by the forming blocks, use a rubber, plastic, or rawhide mallet and lightly tap the sheet. This will cause the metal to begin protruding beyond the forming blocks to the desired angle. Start tapping at one end and work back and forth along the edge, gradually and evenly making the bend. Continue doing this until the protruding metal is forced down to the desired angle against the forming block. Allow for springback by driving the material slightly farther than the actual bend. If a large amount of metal extends beyond the forming blocks, maintain hand pressure against the protruding sheet to prevent it from bouncing. Remove any irregularities by holding a straight block of hardwood edgewise against the bend and striking it with heavy blows of a mallet or hammer. If only a small amount of metal protrudes beyond the forming block, use the hardwood block and hammer to make the entire bend.

FORMING BLOCKS

Airframe repairers need to use, and in some cases must themselves make, certain tools as holding and support devices when forming and processing metal in various shapes and during the bumping operation.

Downloaded from http://www.everyspec.com

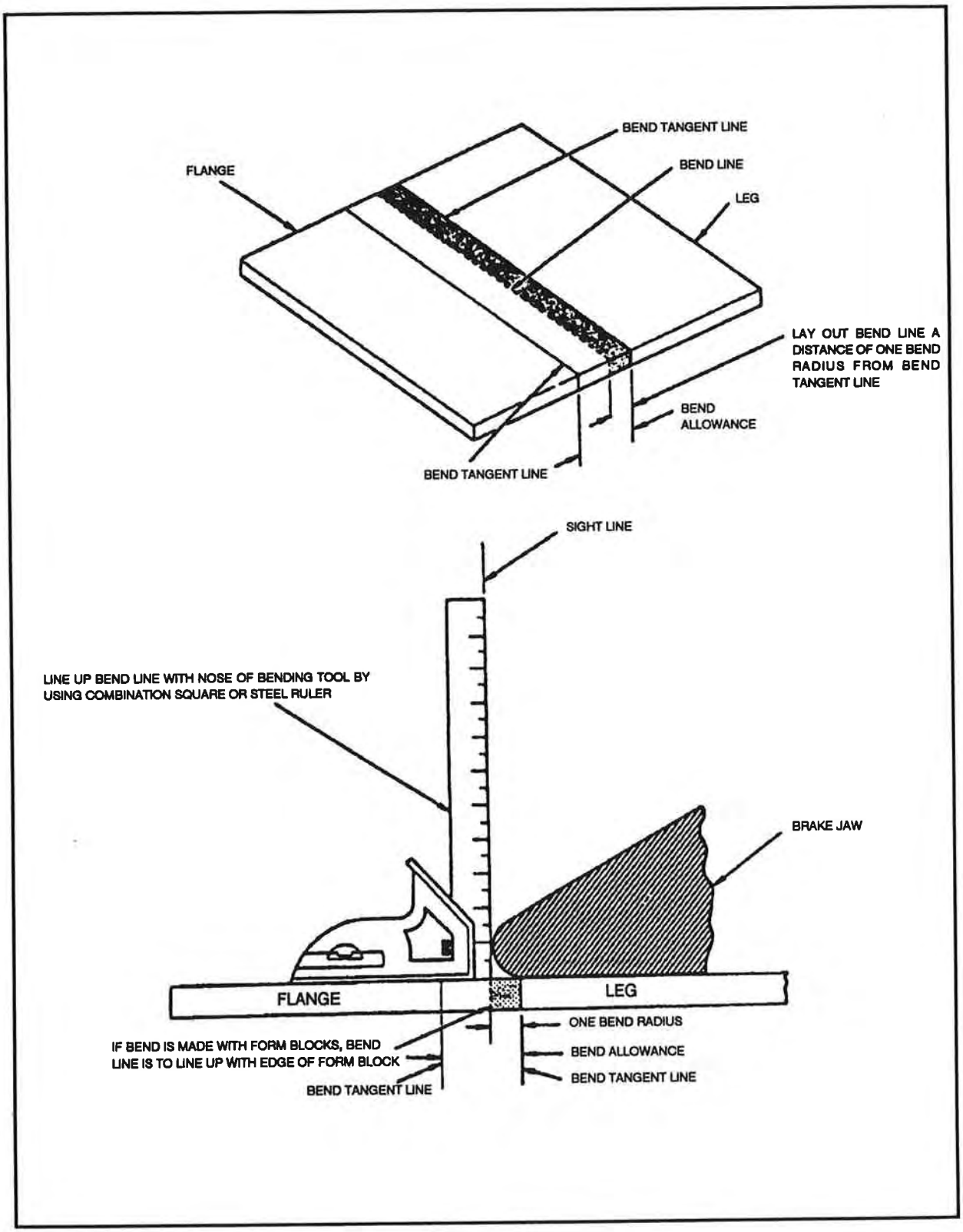

Figure 5-13. Using bend lines--cornice brake

Downloaded from http://www.everyspec.com

These tools include wooden and sometimes metal forming blocks (V-blocks and hardwood forming blocks) and sandbags.

Forming blocks are normally a form constructed of hardwood, metal, phenolic, or some other material, which a sheet of metal is formed against and is forced to take the shape of to make a specific shaped part. Normally manufactured by the user, forms can range from a simple straight-line forming block to very complex compound-curved blocks. Many factors determine how much time and energy is expended to make the forming block; for example, mission requirements, time available, equipment, material, number of times the block will be used, and so on. A simple forming block might be manufactured and used as follows:

- Select the material to make the block—normally a hardwood such as maple or oak. If the block will be used extensively, a metal such as aluminum or steel might be a better choice.
- Make a template of the part to be manufactured and transfer the design to the forming block. See Figure 5-14.

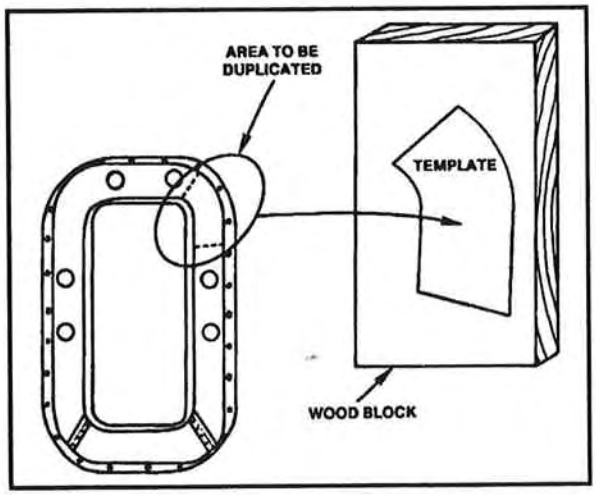

Figure 5-14. Using a template to make a forming block

- Cut and shape the forming block to the required shape.
- Sand or file the proper radius of bend and undercut it if needed on forming the block. See Figure 5-15.
- Manufacture a holding block, affix holding pins to forming block, or do both to help position the metal to be formed against the forming block. Refer to Figure 5-15 again.

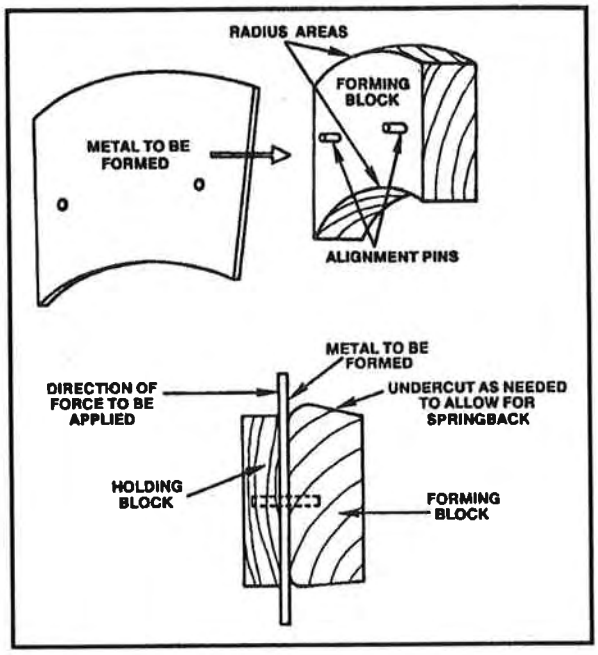

Figure 5-15. Completed forming block

- Position the part to be formed against the forming block and apply necessary force (with a hammer or press, for example) to form the part.
- Remove, trim, smooth, and drill part to final shape.
- Heat-treat part if required—see Chapter 2.

Curving Formed or Extruded Angles

Both formed and extruded angles can be curved (but not bent sharply) by stretching or shrinking either of the flanges. Curving by stretching one flange is usually preferable because it requires only a V-block and rubber mallet and is very easy to do.

V-blocks (Figure 5-16) are usually made of hardwood. They are widely used in airframe metalwork for shrinking and stretching metal, especially angles and flanges. The size of the block depends on the work to be done and on the repairer's judgment or personal preference. Maple and ash are recommended for the best results when working with aluminum alloys, but any other hardwood is suitable. Aluminum and phenolic may also be used to make V-blocks.

Downloaded from http://www.everyspec.com

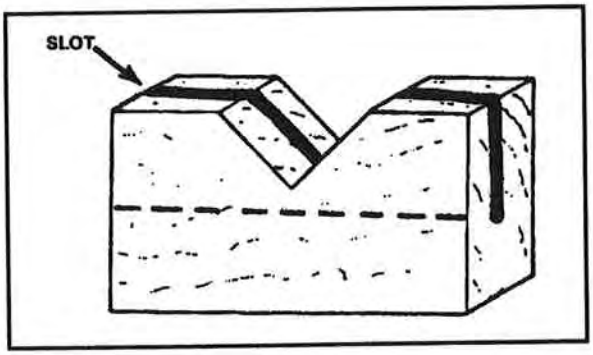

Figure 5-16. V-block

Stretching One Flange

Refer to Figure 5-17. Place the flange to be stretched in the groove of the V-block. Using a stretching mallet, strike the flange directly over the V portion with light, even blows and gradually force it down into the V. (Blows that are too heavy will buckle the angle strip.) Keep moving the angle strip across the V-block while continuing to strike the spot directly above the V lightly. Form the curve gradually and evenly as the strip is moved slowly back and forth, striking equally spaced hammer blows on the flange.

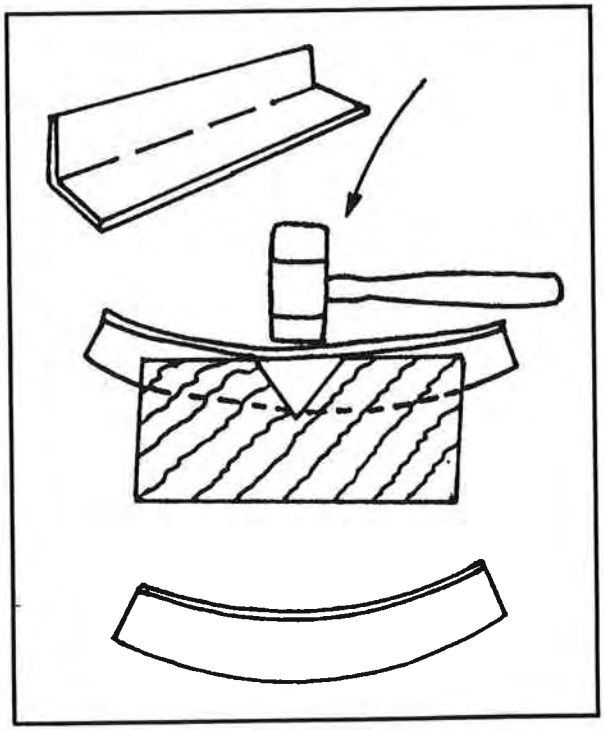

Figure 5-17. Stretching on a V-block

Lay out a full-sized, accurate pattern on a sheet of paper or plywood and periodically check the accuracy of the curve. It is best to get the curve to conform roughly to the desired shape before trying to finish any one portion; finishing or smoothing the angle can cause some other portion of it to change shape. If any part of the angle strip is curved too much, reduce the curve by reversing the angle strip on the V-block, placing the bottom flange up, and striking it lightly with the rubber mallet.

Try to form the curve with the least possible amount of hammering because too much hammering will work-harden the metal. Work hardening can be recognized by lack of bending response or by springback in the metal. In some cases the part may require annealing during the curving operation. If it does, be sure to heat-treat the part again before installing it on the aircraft.

Shrinking One Flange

Refer to Figure 5-18. Either of two methods may be used to curve an extruded or formed angle strip by shrinking: the V-block shrinking method or the shrinking block method. In general, the V-block shrinking method is the most satisfactory because it is faster, easier, and affects the metal less. However, very good results can also be obtained with the shrinking block method.

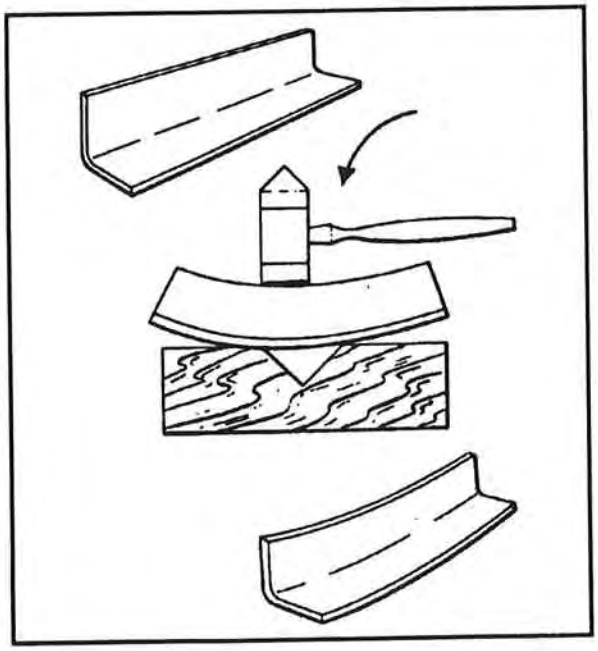

Figure 5-18. Shrinking on a V-block

Downloaded from http://www.everyspec.com

V-Block Shrinking Method

In the V-block shrinking method place one flange of the angle strip flat on the V-block with the other flange extending upward. Hold the upper flange firmly so that it does not bounce when hammered, and strike its edge lightly with a round, soft-faced mallet. Begin at one end of the angle strip and work back and forth striking light blows directly over the V-portion of the block. The edge of the flange should be struck at a slight angle because this tends to keep the vertical flange from bending outward. Check the curve occasionally for accuracy with the pattern. If a sharp curve is made, the angle (the cross section of the formed angle) will close slightly. To avoid this, clamp the angle strip to the hardwood board with the hammered flange facing upward. Use small C-clamps on which the jaws have been covered with masking tape. If the angle has already closed, the flange can be brought back to the correct angle with a few blows of a rubber mallet or with the help of a small hardwood block. If any portion of the angle strip is curved too much, reduce the curve by reversing the angle on the V-block and hammering it with a suitable mallet, as explained above. When the proper curve has been made, smooth the entire angle by planishing it with a soft-faced mallet.

Shrinking Block Method

Use the shrinking block method when the angle form must be sharp. Begin the process by crimping the flange that is to form the inside of the curve. Hold the crimping pliers so that the jaws are about 1/8 inch apart. Rotating the wrist back and forth, bring the upper jaw of the pliers into contact with the flange, first on one side and then on the other side of the lower jaw. Complete the crimp by working a raised portion slowly into the flange, gradually increasing the twisting motion of the pliers. Do not make the crimp too large because it will be hard to work out. Its size depends on the thickness and softness of the material; usually about 1/4 inch is enough. Place several crimps evenly spaced along the desired curve; leave enough space between each crimp so that the jaws of the shrinking block can easily be attached. After completing the crimping, place the crimped flange in the shrinking block so that one crimp at a time is positioned between the jaws. Flatten each crimp with light blows of a soft-faced mallet, starting at the apex (the closed end) of the crimp and gradually working toward the edge of the flange. Check the curve of the angle with a pattern periodically during the forming process and again after all the crimps have been worked out. If the curve needs to be increased, add more crimps and repeat the process. Space the additional crimps between the original ones so that the metal will not become unduly work-hardened at any one point. If the curve needs to be increased or decreased slightly at any point, use the V-block. After obtaining the desired curve, you may need to planish the angle strip over a stake or wooden form.

FLANGED ANGLES

The process of forming flanged angles is slightly more complicated than forming extruded angles because the bend is shorter (not gradually curved) and requires shrinking or stretching in a small or concentrated area. If the flange will point toward the inside of the bend, the material must be shrunk. If it will point toward the outside, it must be stretched.

Shrinking

Use wooden forming blocks like those in Figure 5-19; proceed as follows:

- Cut the metal to size, allowing for trimming after forming. Determine bend allowance for a 90° bend and round off the edge of the forming block accordingly.
- Clamp the material in the forming blocks and bend the exposed flange against the block. After bending, tap the blocks slightly. This causes the bend to begin setting.

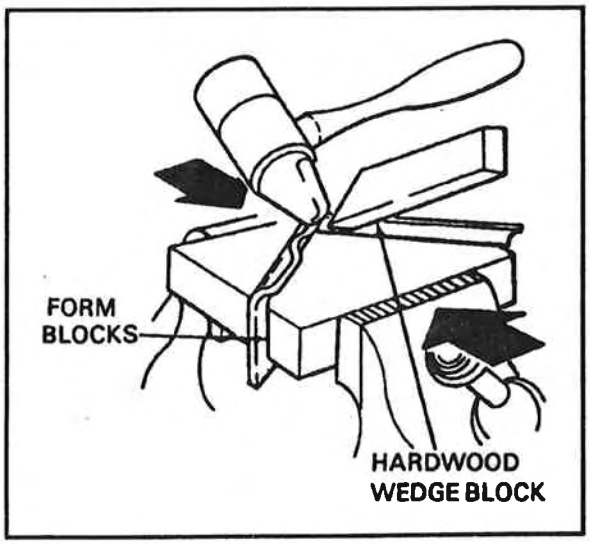

Figure 5-19. Forming by shrinking

Downloaded from http://www.everyspec.com

- Using a soft-faced shrinking mallet, start hammering near the center and work gradually toward both ends. The flange will tend to buckle at the bend because the material is compressed into less space. Work the material into several small buckles rather than a single large one. Work each buckle out by hammering lightly and gradually compressing the material in each. Use a small hardwood wedge block to help work out the buckles.
- Planish the flange after it is flattened against the forming block and remove small irregularities. With hardwood forming blocks use a metal planishing hammer; with metal blocks use a soft-faced mallet. Trim the excess material away, file, and polish (Figure 5-20).

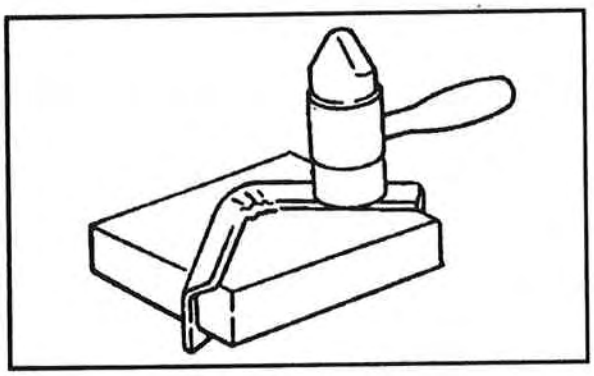

Figure 5-20. Planishing a flange

Stretching

Use the same forming blocks, a wooden wedge block, and a mallet in the same manner as for shrinking; proceed as follows:

- Cut the material to size (allowing for trim), determine the bend allowance for a 90° bend, and round off the edge of the block to conform to the desired radius of bend.
- Clamp the material in the forming blocks (Figure 5-21).
- Start hammering near the ends with a soft-faced rubber mallet and work the flange down smoothly and gradually to prevent cracking and splitting. Planish the flange and angle (as described above for shrinking); trim and smooth the edges if necessary.

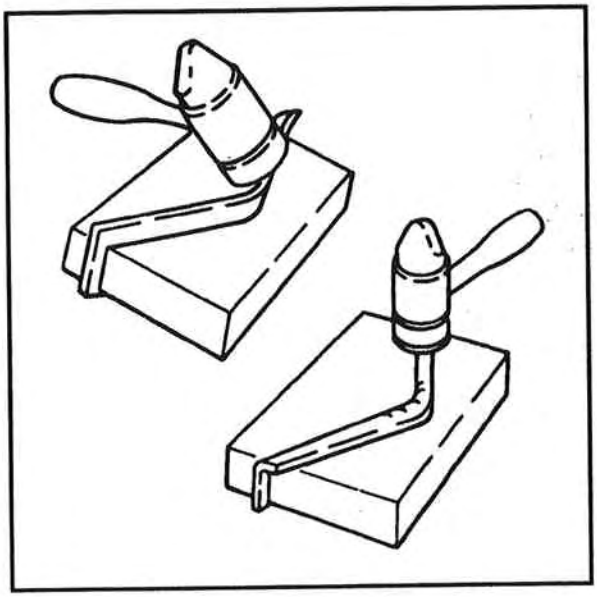

Figure 5-21. Forming by stretching

CURVED FLANGED PARTS

Curved flanged parts are usually hand-formed. The rib with relief holes is probably the simplest to form of the four types (Figure 5-22). It has a concave (inside) flange and a convex (outside) flange.

The concave flange is formed by stretching; the convex flange by shrinking. Both these parts may be formed with the help of hardwood or metal-forming blocks. These blocks are made in pairs similar to those used for straight-angle bends and are identified in the same manner. They differ from the latter in that they are made specifically for the particular part to be formed, they match each other exactly, and they conform to the actual dimensions and contour of the finished article. Mating parts may be equipped with aligning pins to help line up the blocks and hold the metal in place. Blocks may be held together by C-clamps, a vise, or with bolts by drilling through both forms and the metal. Bolts may be used provided the holes made do not affect the strength of the finished part. The edges of the forming block are rounded off to give the correct radius of bend to the part. They are undercut to allow for springback of the metal. The undercut is especially needed if the material is hard or if the bend must be highly accurate.

In the plain nose rib only one large convex flange is used, but this part is hard to form without buckling because of the great length around it. The flange and the beaded portion of this rib provide enough

Downloaded from http://www.everyspec.com

strength to make it a very good type to use. In nose ribs with relief holes the concave flange is difficult to form; however, the outside flange is broken up into smaller sections by relief holes (notches inserted to prevent strains in a bend). In nose ribs with crimps and beads the crimps are inserted at equally spaced intervals. They are positioned to absorb material and cause curving while also strengthening the part. In the fourth nose rib shown in Figure 5-22, a combination of the four common forming methods is applied: crimping, bending, putting in relief holes, and using a formed angle riveted on each end. The beads and formed angles strengthen the part. Following are the major steps in forming a curved flanged part.

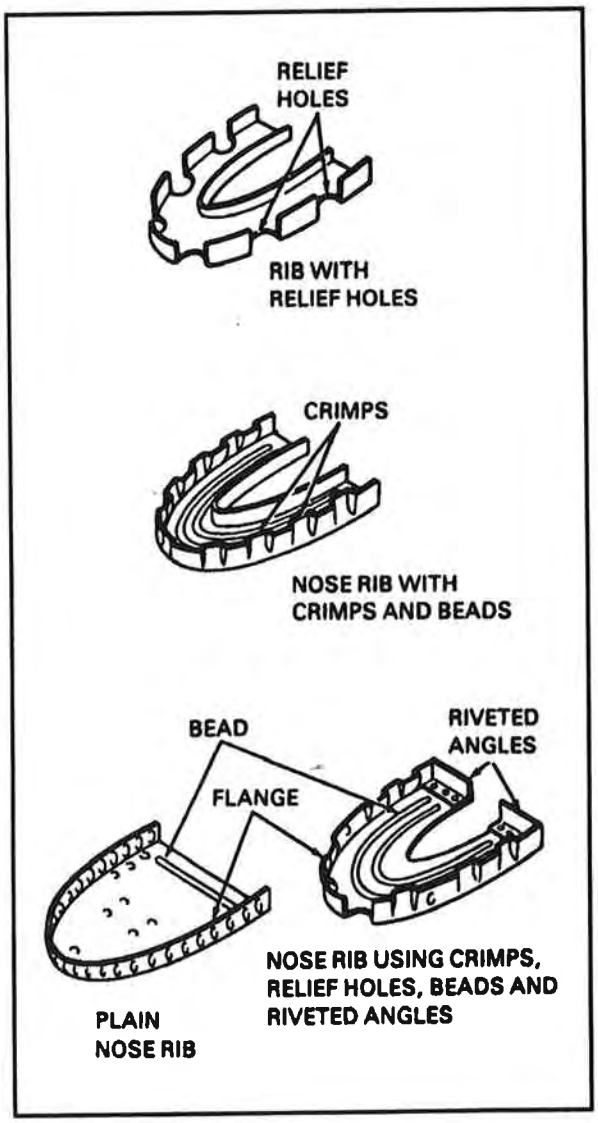

Figure 5-22. Nose ribs with curved flanged parts

Cutting and Laying Out Material

Refer to Figure 5-23. Cut the material to size (allowing for trim), locate and drill holes for alignment pins, and remove all burrs (jagged edges). Place the material between the wooden forming blocks tightly in a vise so that it will not move or shift. Clamp the work as close as possible to the particular part being hammered to prevent straining the forming blocks and to keep the metal from slipping.

Forming a Concave Flanged Curve

Refer to Figure 5-24. First, bend the flange on the concave curve. Stretching is more likely to split or crack the metal than shrinking. (If damage occurs, a new piece must be made.) Using a soft-faced mallet, start hammering at a point a short distance away from the beginning of the concave bend and continue toward the center of the bend. This procedure permits some of the excess metal along the tapered portion of the flange to be worked into the curve where it will be needed. Continue hammering until the metal is gradually worked down over the entire flange flush with the forming block.

Forming a Convex Flanged Curve

Refer to Figures 5-25, 5-25a. Starting at the center of the curve and working toward both ends, hammer the convex flange down over the form. Strike the metal with glancing blows angled about 30° off the perpendicular and with a motion that tends to pull the part away from the block. Stretch the metal around the radius bend and gradually remove the buckles by hammering on a wedge block. While working the metal down over the form, keep the edges of the flange as nearly perpendicular to the block as possible. The wedge block helps keep the edge of the metal perpendicular to the block. It reduces the chances that buckles will form and the metal split or crack, and it helps remove existing buckles. Then trim the flanges of excess metal, planish, remove burrs, round off the corner (if any), and check the part for accuracy. Heat-treat the metal if it is formed from annealed material.

FORMING BY BUMPING

The two commonly used methods of bumping are bumping on a form block or female die and bumping on a sandbag. Either method requires only one form: a wooden block, a lead die, or a sandbag. The blister or streamlined cover plate is an example of a part made by the block or die method of bumping. Wing fillets are an example of parts that are usually formed by bumping on a sandbag.

Downloaded from http://www.everyspec.com

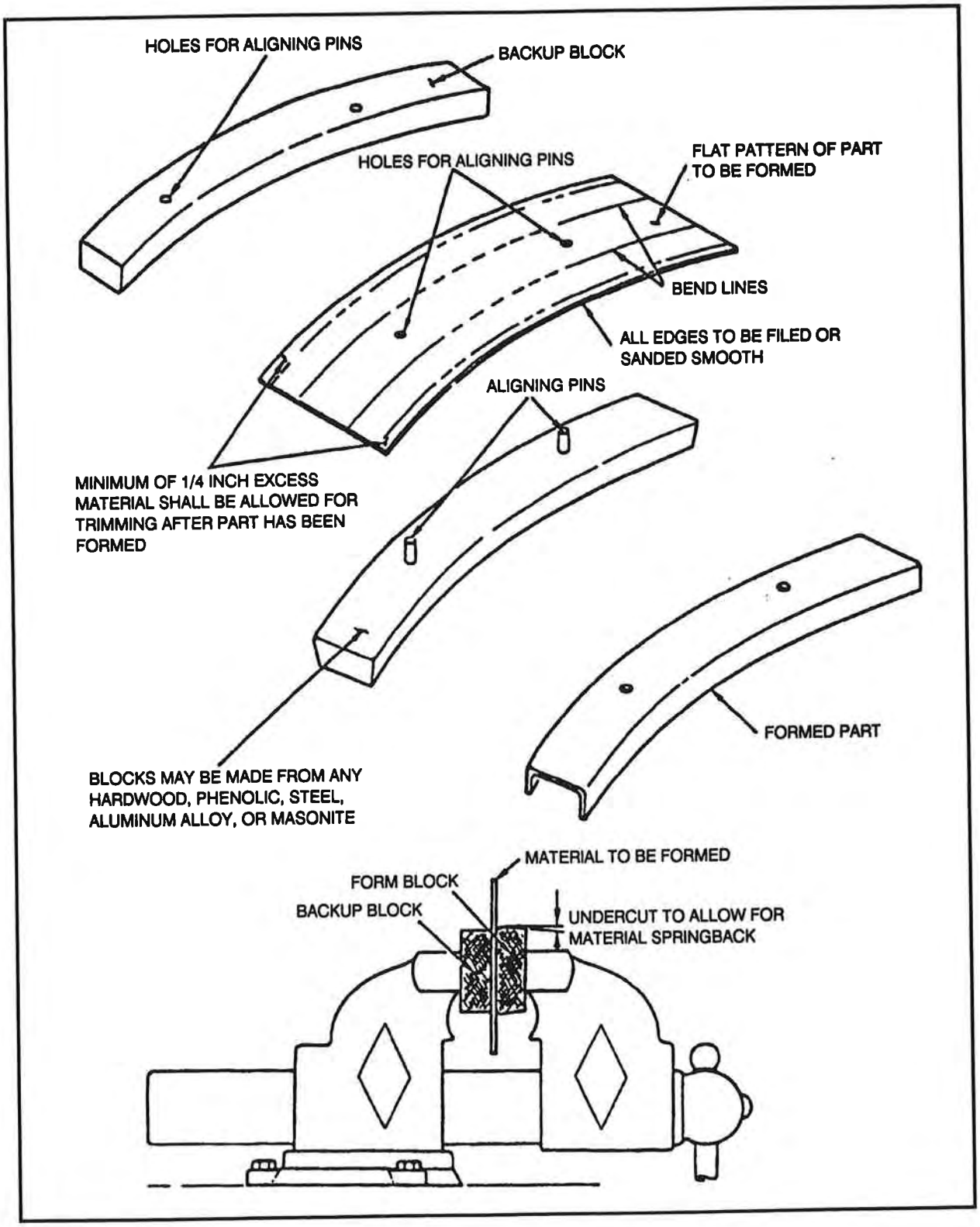

Figure 5-23. Material and form block alignment

Downloaded from http://www.everyspec.com

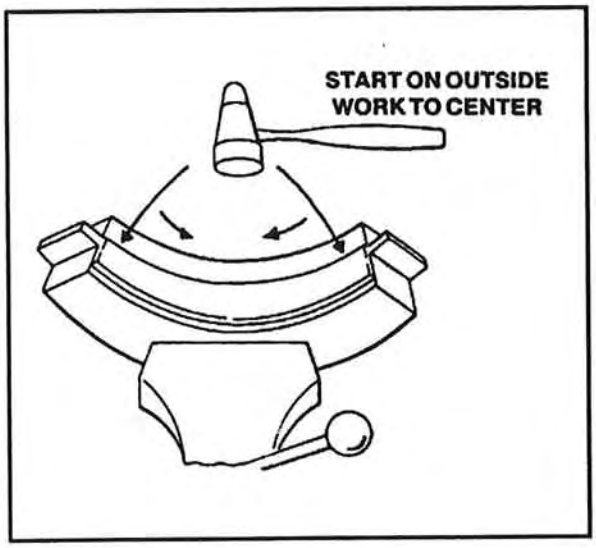

Figure 5-24. Forming a concave curve

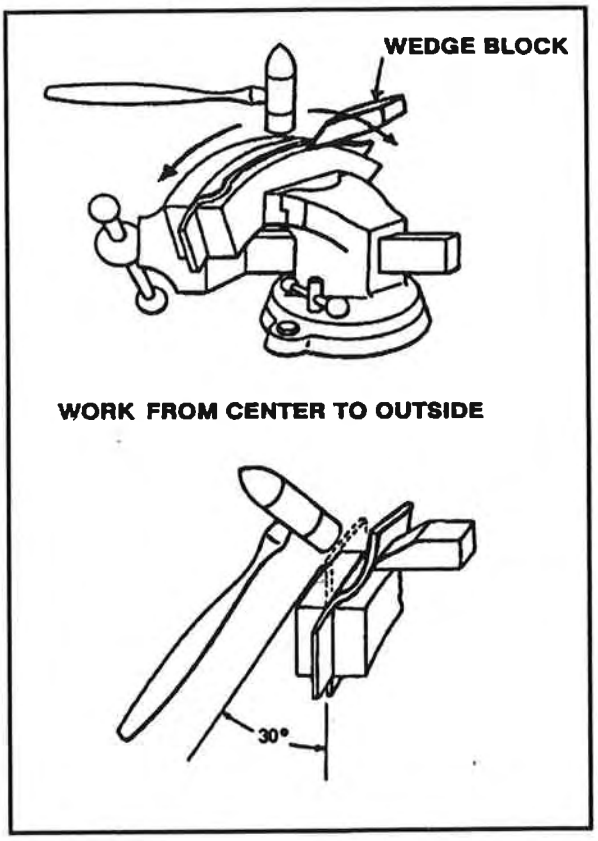

Figure 5-25. Forming a convex curve

Form Block Bumping

Form block bumping is done with a wooden block or lead die. Such a block or die designed for bumping must have the same dimensions and contour as the outside of the blister. To provide enough bucking weight and bearing surface for fastening the metal, the block or die should be at least 1 inch larger in all dimensions than the form requires (Figure 5-26). Follow this procedure:

- Hollow the wooden block out with saws, chisels, gouges, files, and rasps. Smooth and finish it with sandpaper. Make the inside of the form as smooth as possible; the slightest irregularity will show up on the finished part. Prepare several templates (patterns of the cross section) so you can check the form for accuracy (Figure 5-27).
- Shape the contour of the form to all templates. Shape the areas between the template check points to conform to the remaining contour and to the last template. (Shaping the forming block requires special care—the more accurate it is in all details, the less time it will take to produce a smooth, finished part.)
- Make sure the material is correctly clamped to the forming block. There are several ways to do this. For parts such as the blister, it is best to use a full metal cutout or a steel hold-down plate (Figure 5-28).
- Place the hold-down plate directly over the material to be formed and clamp it in position with bolts or C-clamps. Tighten the C-clamps or bolts just enough to hold the material flat against the face of the forming block, but not so tightly that the metal cannot be drawn into the form. Hold the material flat against the face of the form; otherwise it will bend up or buckle away from the block. The blister portion will become very thin in places unless it is allowed to slip a little into the concave depression.
- Hold-down plates should be of heavy steel, 1/8 inch for small forms and 1/4 inch or heavier for large forms. If the material for making a full metal hold-down plate is not available, use a hardwood cutout. Make the cutout and use it in the same manner as the steel plate, but take greater care to hold the

Downloaded from http://www.everyspec.com

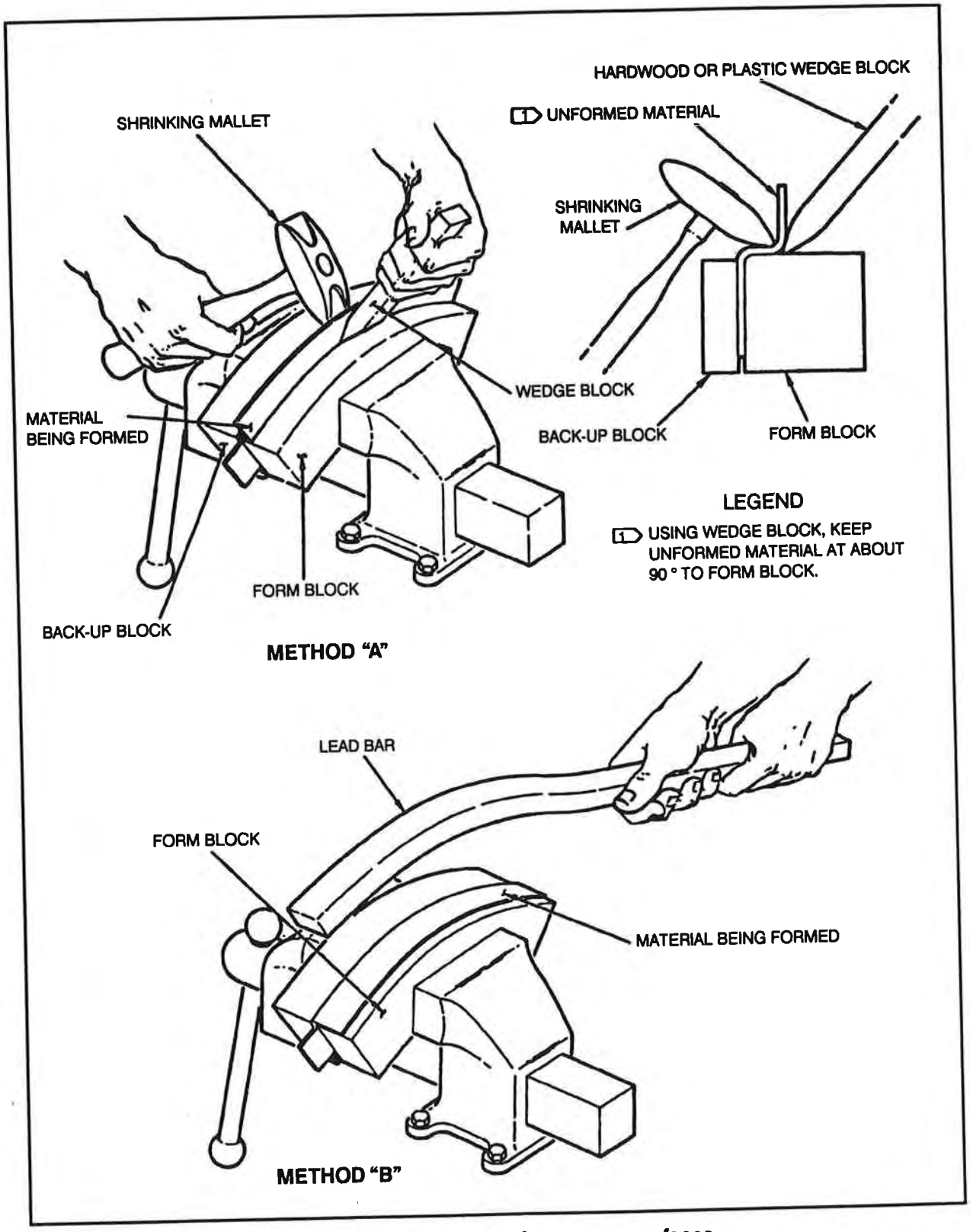

Figure 5-25a. Hand forming convex surfaces

Downloaded from http://www.everyspec.com

material as desired. Use a pieced form clamp if a full metal hold-down plate or hardwood cutout is not available or if a full cutout cannot be used. Be careful to clamp them properly and position them so that they line up with the edge of the form. Unless they are lined up accurately, the material will buckle.

- After the form is prepared and checked, perform the bumping as follows:
  - Cut a metal blank to size, allowing an extra 1/2 to 1 inch to permit drawing.

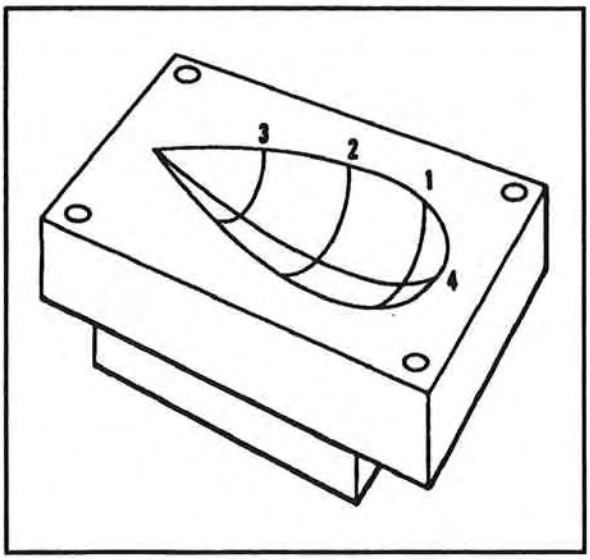

Figure 5-26. Form block

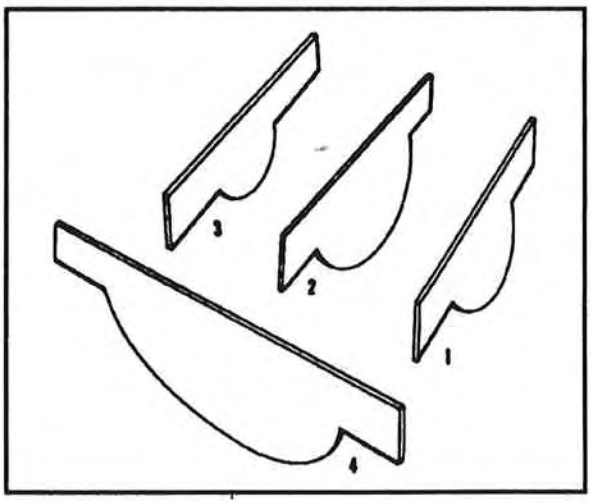

Figure 5-27. Templates

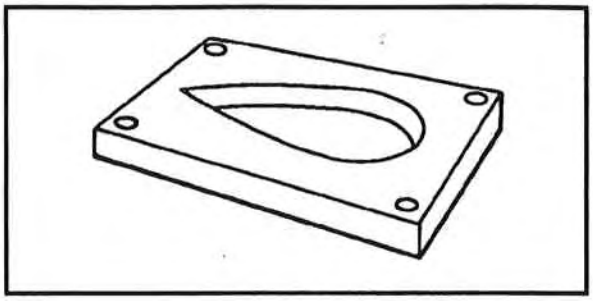

Figure 5-28. Hold-down plate

  - Apply a thin coat of light oil to the block and the aluminum to prevent galling (scraping on rough spots).
  - Clamp the material between the block and steel plate so that it will be firmly supported and yet be able to slip a little toward the inside of the form.
  - Clamp the bumping block in a bench vise. Use a soft-faced rubber mallet or a hardwood drive block with a suitable mallet to start the bumping near the edges of the form.
  - Work the material down gradually from the edges with light blows of the mallet. Remember that the purpose of bumping is to work the material into shape by stretching rather than forcing it to the form with heavy blows. Always start bumping near the edge of the form. Never start near the center of the blister.
  - Before removing the work from the form, smooth it as much as possible by rubbing it with the rounded end of either a maple block or a stretching mallet.
  - Remove the blister from the bumping block and trim it to size.

Sandbag Bumping

Sandbag bumping is one of the most difficult methods of hand-forming sheet metal because there is no exact forming block to guide the operation. Therefore, a depression must be driven into the sandbag to take the shape of the hammered portion of the metal (Figure 5-29).

The depression, or pit, tends more or less to shift as a result of the hammering and therefore must be periodically readjusted during the bumping

Downloaded from http://www.everyspec.com

process. The amount of shifting depends largely on the contour or shape of the piece being formed and on whether glancing blows must be struck to stretch, draw, or shrink the metal. When forming by this method, prepare a contour template or some sort of pattern to serve as a working guide to ensure that the finished part is accurate.

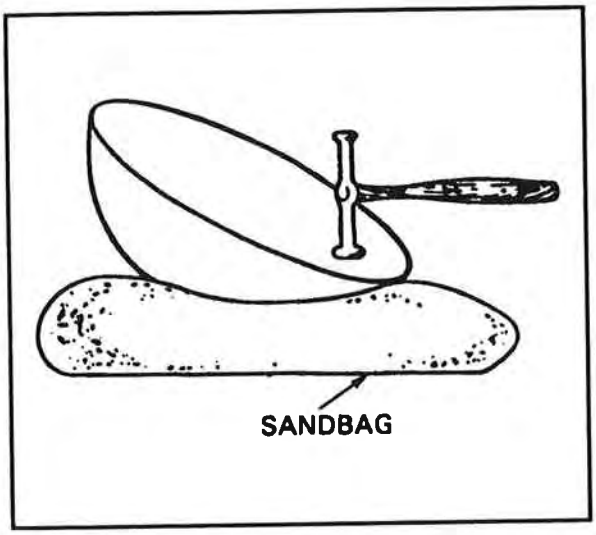

Figure 5-29. Sandbag bumping

Make the pattern from ordinary kraft or similar paper and fold it over the part to be duplicated. Cut the paper cover at the points where it would require stretching to fit, and attach additional pieces of paper with masking tape to cover the exposed portions. After covering the part completely, trim the pattern to exact size. Open the pattern and spread it out on the metal from which the part is to be formed. Although the pattern will not lie flat, it will give a fairly accurate idea of the shape of the metal to be cut, and the pieced-in sections will indicate where the metal is to be stretched. When the pattern has been placed on the material, use a pencil to mark the outline of the part and the portions to be stretched. Add at least 1 inch of excess metal when cutting the material to size. The excess metal can be trimmed off after the part is bumped into shape. If the part to be formed is radially symmetrical, it will be fairly easy to shape because a simple contour template can be used as a working guide.

The following procedure for bumping sheet metal parts on a sandbag includes certain basic steps that can be applied to any part, regardless of its contour or shape:

- Lay out and cut the contour template. (The template can be made of sheet metal, medium-heavy cardboard, or thin plywood.)
- Determine the amount of metal needed, lay it out, and cut it to size, allowing at least 1/2 inch excess.
- Place a sandbag on a solid foundation capable of supporting heavy blows and make a pit in the bag with a smooth-faced mallet. Analyze the part to determine the correct radius the pit should have for the forming operation. The pit will change shape with the hammering and must be readjusted occasionally.
- Select a soft, round-faced or bell-shaped mallet with a contour slightly smaller than the contour desired on the sheet metal part. Hold one edge of the metal in the left hand and place the portion to be bumped near the edge of the pit on the sandbag. Strike the metal with light, glancing blows about 1/2 to 1 inch from the edge.
- Continue bumping toward the center, revolving the metal and working gradually inward until the desired shape is obtained. Shape the entire part as a unit.
- Check the part often for accuracy of shape during the bumping process by applying the template. If wrinkles form, work them out before they become too large.
- Finally, remove small dents and hammer marks with a suitable stake and planishing hammer or with a hand dolly and planishing hammer.
- After bumping is completed, use a pair of dividers to mark around the outside of the object. Trim the edge and file it smooth. Clean and polish the part.

JOGGLING

A joggle is an offset formed on an angle strip to allow clearance for a sheet or an extrusion. Joggles are often found at the intersection of stringers and formers. One of these (usually the former) has the flange joggled to fit flush over the flange of the other (usually the stringer). The amount of offset is usually small; therefore, the depth of the joggle is normally specified in thousandths of an inch. The thickness of the material to be cleared governs the depth of the joggle. In determining the length of the joggle necessary, it is common practice to allow an extra 1/16 inch

Downloaded from http://www.everyspec.com

to give enough added clearance to ensure a fit between the joggled, overlapped part.

There are a number of different methods to form joggles. If the joggle is to be made on a straight flange or flat piece of metal, form it on a cornice brake by inserting the metal and bending it up along the line of the joggle. Hold a piece of metal of the correct thickness to give the desired offset under the bent-up portion, and pound the flange down while the metal is still in the same position in the brake. Another method using the cornice brake is shown in the

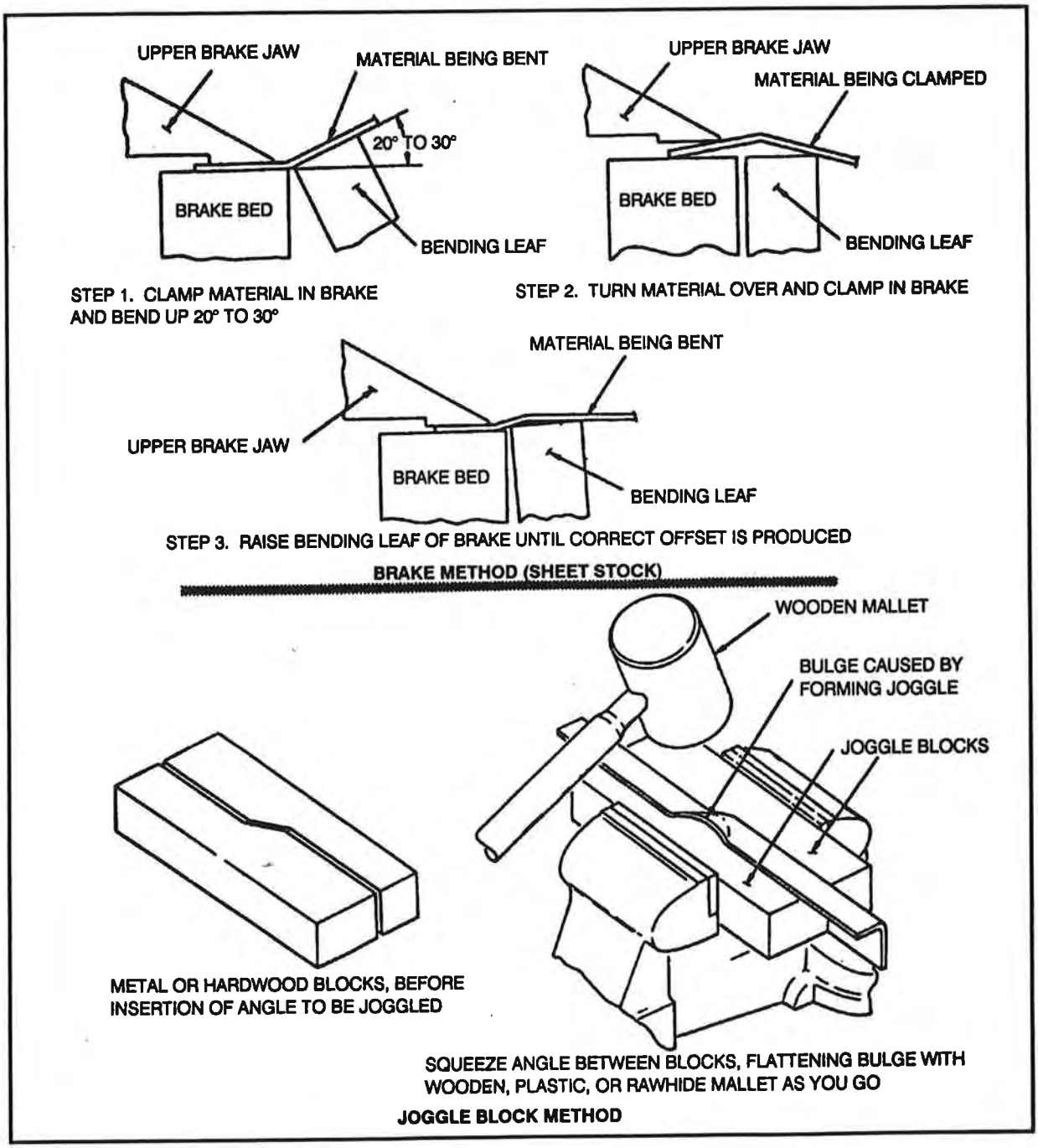

Figure 5-30. Forming joggles using brake or joggle blocks

Downloaded from http://www.everyspec.com

upper portion of Figure 5-30. The joggle block method is clearly illustrated in the bottom portion of Figure 5-30.

Joggling clips such as the one shown in Figure 5-31 can be used to form joggles on flanged angles. Follow the step-by-step procedures from the top in the flange illustrated, and notice especially the factors to consider when fabricating a joggle clip (gage, thickness, and so on).

Where a joggle is necessary on a curved flange, forming blocks or dies made of hardwood, steel, or aluminum alloy may be used. If the die is to be used only a few times, hardwood is satisfactory because it is easily worked. If a number of similar joggles are to be produced, then use steel or aluminum alloy dies. Dies of aluminum alloy are preferred, since they are easier to fabricate than those of steel and wear about as long. Aluminum alloy dies are sufficiently soft and resilient to permit forming aluminum alloy parts onto them without marring; nicks and scratches can be easily removed from their surfaces.

When using joggling dies for the first time, test them for accuracy on a piece of waste stock. In this way you avoid the possibility of ruining already fabricated

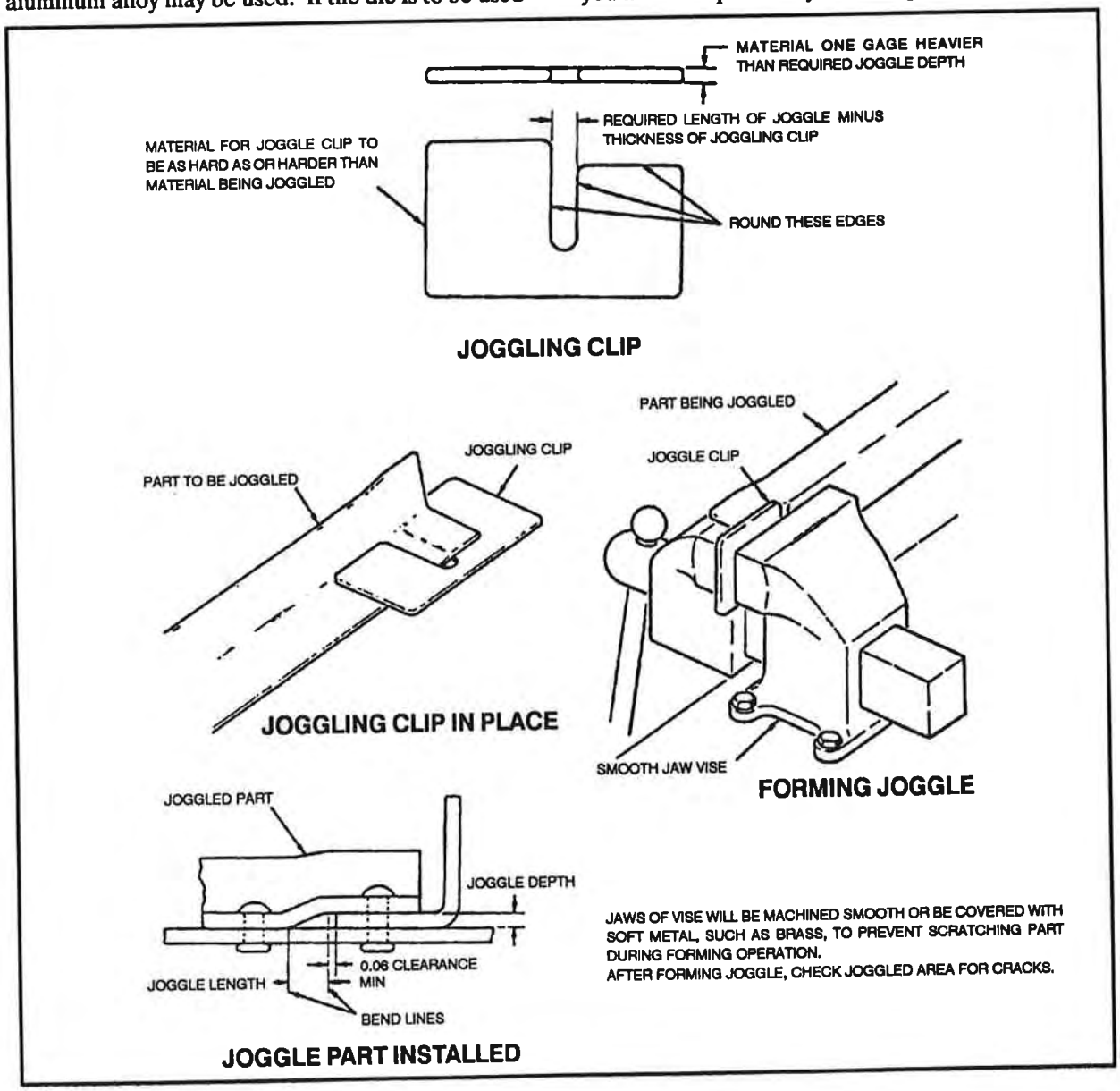

Figure 5-31. Forming joggles using joggling clips

Downloaded from http://www.everyspec.com

parts. Always keep the surfaces of the blocks free from dirt, filings, and the like.

RELIEVING STRESS

Relief Holes

Wherever two bends intersect, material must be removed to make room for the material contained in the flanges. Holes are therefore drilled at the intersection. These holes, called relief holes, prevent strains from being set up at the intersection of the inside bend tangent lines. Such strains may cause the metal to crack. Relief holes also provide a neatly trimmed corner when the excess material is trimmed away. Size of the relief holes varies with thickness of the material. They should not be less than 1/8 inch in diameter for aluminum alloy sheet stock up to and including 0.064 inch thick, or 3/16 inch for stock ranging in thickness from 0.072 to 0.128 inch. The most common method for determining the diameter of a relief hole is to use the radius of bend for this dimension, provided it is not less than the minimum allowance (1/8 inch).

Relief holes must touch the intersection of the inside bend tangent lines. To allow for possible error in bending, make relief holes extend 1/32 to 1/16 inch behind the inside bend tangent lines. It is a good practice to use the intersection of these lines as the center for the relief holes (Figure 5-32).

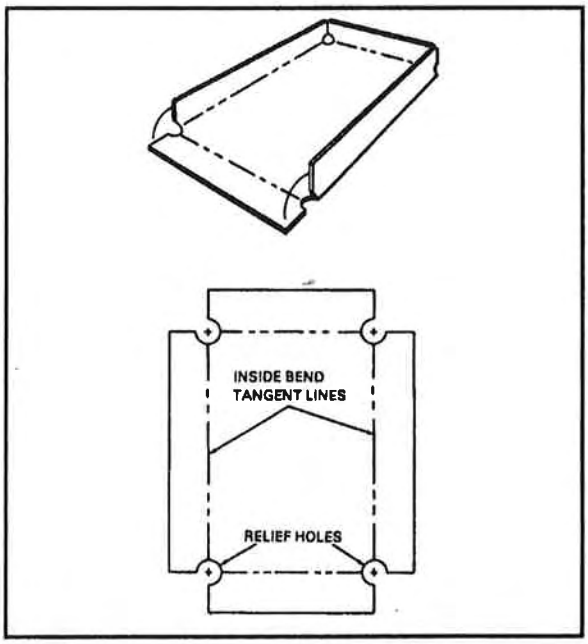

Figure 5-32. Locating relief holes

Lightening Holes

Holes are occasionally cut in rib sections, fuselage frames, and other structural parts to reduce weight. Such holes are known as lightening holes. To keep from weakening the member by removing the material, flanges are often pressed around the holes to strengthen the area from which the material was removed. These holes should never be cut in any structural part unless authorized. The size of a lightening hole and the width of the flange formed around the hole are determined by design specifications; these specifications consider margins of safety so that the weight of the part can be reduced and still retain the necessary strength. Lightening holes can be cut by any of the following methods:

- Punching out, if the correct size punch die is available.
- Scribing the circumference of a hole with dividers, inserting dies in a vise or arbor press, and drilling around the entire circumference. The dies will work more smoothly in a hydraulic press if they are coated with light machine oil.
- Using the chamfered flanging block (Figure 5-33) to center the material to be flanged and hammering around it with a rubber mallet until the flange conforms to the chamfer. In the other forming blocks illustrated, the hole being chamfered is formed by using a male die that is chamfered to the width of the flange and the desired angle. The hole has the same diameter as the flange. Either type of forming block may be used.

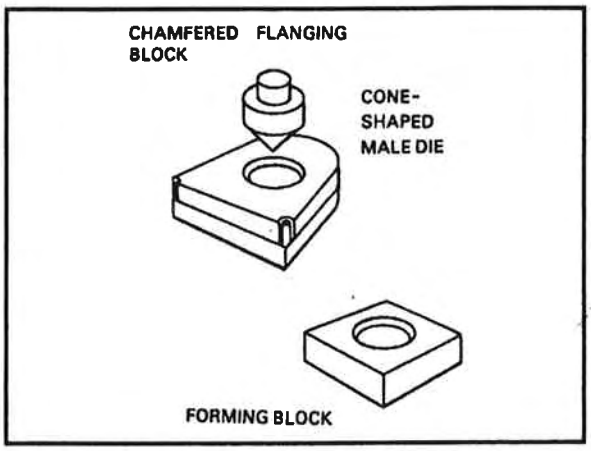

Figure 5-33. Chamfered forming block

Downloaded from http://www.everyspec.com

CHAPTER 6

RIVETS, SPECIAL-PURPOSE FASTENERS, AND RESISTANCE WELDING

Even an aircraft made with the best materials and the strongest parts would be valueless unless those parts were firmly held together. A number of methods are used to hold metal parts together: riveting, bolting, brazing, and welding. Whichever method is used, it must produce a union that will be as strong as the parts that it joins. This chapter covers riveting, special-purpose fasteners, and resistance welding. A rivet is a metal pin used to hold two or more metal sheets, plates, or pieces of material together. A rivet is manufactured with a head on one end. The shank of the rivet is inserted through matched holes in two pieces of material; the tip is then flattened to form a second head to clamp the two pieces securely together. The second head is formed either by hand or by pneumatic equipment and is called a shop head. The shop head functions in the same manner as a nut on a bolt. Rivets fall into two main groups: common solid-shank rivets and special rivets, the latter for use in special cases. Special-purpose fasteners covered in this chapter are Huck Lock Bolts, Hi-Shear rivets, Jo-Bolts, Hi-Lock Fasteners, and Rivnuts. Welding is a method of adding to metal parts or fastening them together. The purpose of all welding is to join two pieces of metal without loss of strength. Resistance welding is the only kind of welding that is allowed on the heat-treatable alloys used in Army aircraft.

Section I. Solid-Shank Rivets

TYPES

Aluminum alloy is the material used for most aircraft solid-shank rivets. The strength and temper of aluminum alloy rivets are identified by digits and letters similar to those adopted to identify strength and temper conditions of aluminum and aluminum alloy sheet stock. Steel, Monel metal, and corrosion-resistant steel are other materials used for rivets in certain cases.

Aluminum Alloy

Aluminum alloy rivets include—

- The 1100 rivet—a very soft rivet composed of 99 percent pure aluminum; intended for riveting the softer aluminum alloys used for nonstructural parts (all parts where strength is not a factor). An example of its use is the riveting of map cases.
- The 2117-T4 rivet—used more than any other rivet for riveting aluminum alloy structures. Its main advantage is that it is ready for use as is when received and needs no further heat treating or annealing. It also has a high resistance to corrosion.
- The 2017-T4 and 2024-T4 rivets—used where more strength is needed than the 2117-T4 rivet can provide.
- The 5056 rivet—used for riveting magnesium alloy structures. It is highly corrosion-resistant and can be driven in as is when received.

Steel

Use mild steel rivets for riveting steel parts. Galvanized rivets should not be used on steel parts that are subjected to high heat. Corrosion-resistant steel rivets are used primarily to rivet corrosion-resistant steel parts, such as fire walls, exhaust stack bracket attachments, and similar structures.

Monel

Use Monel rivets in special cases for riveting high nickel-steel alloys and nickel alloys. Monel rivets may be used interchangeably with corrosion-resistant steel rivets and are easier to drive. However, it is preferable to use stainless steel rivets with stainless parts.

IDENTIFICATION

Markings

Table 6-1 shows how different markings on rivet heads are used to classify their characteristics. These markings may be either a dimple, a raised teat, a pair of raised dashes, a raised cross, a recessed triangle, or a pair of recessed dimples. Some heads have no markings. The markings indicate the composition of the rivet stock. Rivets that have heads with no markings (plain heads) can be distinguished by color: the 1100 rivet is aluminum color; the mild steel rivet is a typical steel color.

Downloaded from http://www.everyspec.com

Dash Numbers

Table 6-2 gives the first and second dash numbers for Military Standard (MS) rivets. The first dash number designates the diameter of the rivet in thirty-seconds of an inch; the second dash number designates its length in sixteenths of an inch. A letter or letters in an MS rivet part number following the basic MS number indicate the rivet's composition; the absence of such a letter indicates that the rivet is made of carbon or mild steel. An example of a complete rivet part is shown in Table 6-1 (notes). Table 6-3 gives head dimensions of rivets as well.

Table 6-1. MS rivet identification

MATERIAL	HEAD MARKING	MS MATERIAL CODE	MS20426 C&K HEAD	MS20427 C&K HEAD	MS20470 UNIV HEAD	MS20613 UNIV HEAD	MS20616 UNIV HEAD	HEAT-TREAT BEFORE USING	STRENGTH (PSI) SHEAR	STRENGTH (PSI) BEARING
1100	PLAIN	A	X		X			NO	10000	25000
2117	DIMPLED	AD	X		X			NO	30000	100000
2017	RAISED TEAT	D	X		X			YES	34000	113000
2024	RAISED DOUBLE DASH	DD	X		X			YES	41000	136000
2056	RAISED CROSS	B	X		X			NO	27000	80000
CARBON STEEL	RECESSED TRIANGLE			X		X		NO	35000	90000
CORROSION-RESISTANT STEEL	PLAIN	F		X		X		NO	75000	80000
MONEL, FEDERAL SPECIFICATION QQ-N-281	RECESSED DOUBLE DIMPLE	M		X			X	NO	85000	

NOTES:

ALL STRENGTH CALCULATIONS FOR RIVETS SHOULD BE BASED ON DIAMETER OF RIVET.
RIVET SPECIFICATION, MIL-R-6874, COVER MATERIAL TYPES A, AD, B, D, AND DD LISTED ABOVE. ALL ALUMINUM ALLOY RIVETS ARE ANODIZED.
AN EXAMPLE RIVET NUMBER CODE IS AS FOLLOWS:

MS 20 470 AD 5 12 P

- MS — MILITARY STANDARD
- 20 — AIRCRAFT HARDWARE
- 470 — HEAD STYLE
- AD — MATERIAL CODE
- 5 — DIAMETER IN THIRTY-SECONDS OF AN INCH
- 12 — LENGTH IN SIXTEENTHS OF AN INCH
- P — CADMIUM-PLATED (STEEL RIVET)

Downloaded from http://www.everyspec.com

Table 6-2. Length and dash numbers

DIA	LENGTH AND DASH NUMBERS																								
	1/8	3/16	1/4	5/16	3/8	7/16	1/2	9/16	5/8	11/16 (Note 3)	3/4 (Note 3)	13/16	7/8	15/16	1	1 1/8	1 1/4	1 3/8	1 1/2	1 3/4	2	2 1/2	3	3 1/2	4
3/32	3-2	3-3	3-4	3-5	3-6	3-7	3-8	3-9	3-10		3-12		3-14		3-16	3-18	3-20	3-22							
1/8		4-3	4-4	4-5	4-6	4-7	4-8	4-9	4-10	4-11	4-12	4-13	4-14	4-15	4-16	4-18	4-20	4-22	4-24	4-28					
5/32			5-4	5-5	5-6	5-7	5-8	5-9	5-10	5-11	5-12	5-13	5-14	5-15	5-16	5-18	5-20	5-22	5-24	5-28	5-32				
3/16			6-4	6-5	6-6	6-7	6-8	6-9	6-10	6-11	6-12	6-13	6-14	6-15	6-16	6-18	6-20	6-22	6-24	6-28	6-32	6-40	6-48		
7/32 (Note 2)					7-6	7-7	7-8	7-9	7-10		7-12		7-14		7-16	7-18	7-20	7-22	7-24	7-28	7-32	7-40	7-48	7-56	
1/4				8-5	8-6	8-7	8-8	8-9	8-10	8-11	8-12	8-13	8-14	8-15	8-16	8-18	8-20	8-22	8-24	8-28	8-32	8-40	8-48	8-56	

NOTES:
1. Identification of MS20426, MS20427, MS20613, MS20615, and MS20470 rivets.
2. Available only in MS20470 rivets.
3. Available only in MS20615 rivets.
4. Examples of part numbers:
   MS20426D3-12 = Rivet, 2017-T4 aluminum alloy, 3/32-inch dia, 3/4 inch long.
   MS20427M2-2 = Monel rivet, 1/16-inch dia, 1/8 inch long.
   MS20613-4P14 = Universal-head rivet, carbon steel, cadmium-plated, 1/8-inch dia, 7/8 inch long.
   MS20615-2M8 = Universal-head rivet, nickel-copper alloy, 1/16-inch dia, 1/2 inch long.
   MS20470A2-12 = Rivet, 1100 aluminum, 1/16-inch dia, 3/4 inch long.
5. Dimensions shown are in inches.

Downloaded from http://www.everyspec.com

Table 6-3. MS rivet dimensions

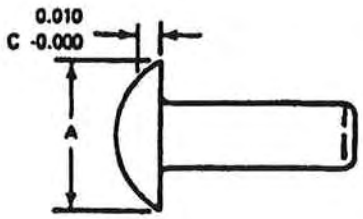

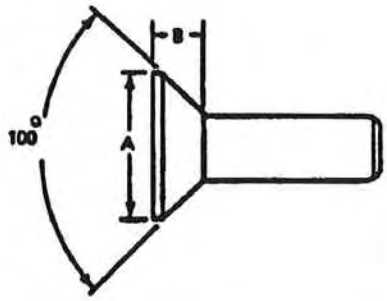

	UNIVERSAL HEAD						COUNTERSUNK HEAD			
RIVET DIA	MS20470		MS20613		MS20615		MS20426		MS20427	
	A	C	A	C	A	C	A	B	A	B
3/32	0.187 ± 0.009	0.040	0.187 ± 0.009	0.040	0.187 ± 0.009	0.040	0.179 ± 0.004	0.036	0.190 ± 0.004	0.042
1/8	0.250 ± 0.012	0.054	0.250 ± 0.012	0.054	0.250 ± 0.012	0.054	0.225 ± 0.004	0.042	0.236 ± 0.004	0.048
5/32	0.312 ± 0.016	0.067	0.312 ± 0.016	0.067	0.312 ± 0.016	0.067	0.286 ± 0.004	0.055	0.298 ± 0.004	0.061
3/16	0.375 ± 0.019	0.080	0.375 ± 0.019	0.080	0.375 ± 0.019	0.080	0.353 ± 0.004	0.070	0.365 ± 0.004	0.075
7/32	0.437 ± 0.022	0.093					0.415 ± 0.004	0.083		
1/4	0.500 ± 0.025	0.107	0.500 ± 0.025	0.107	0.500 ± 0.025	0.107	0.476 ± 0.004	0.095	0.489 ± 0.004	0.103

NOTES:

1. EXAMPLES OF PART NUMBERS:

   MS20470A2-12 - UNIVERSAL-HEAD RIVET, 1100 ALUMINUM, 1/16-INCH DIA, 3/4 INCH LONG.
   MS20613-4P14 - UNIVERSAL-HEAD RIVET, CARBON STEEL, CADMIUM-PLATED, 1/8-INCH DIA, 7/8 INCH LONG.
   MS20615-2MS - UNIVERSAL-HEAD RIVET, NICKEL-COPPER ALLOY, 1/16-INCH DIA, 1/2 INCH LONG.
   MS20426D3-12 - COUNTERSUNK-HEAD RIVET, 100°, ALUMINUM ALLOY, 2017-T4, 3/32-INCH DIA, 3/4 INCH LONG.
   MS20427M2-2 - COUNTERSUNK-HEAD RIVET, 100°, MONEL, 1/16-INCH DIA, 1/8 INCH LONG.

2. DIMENSIONS SHOWN ARE IN INCHES.

Downloaded from http://www.everyspec.com

HEAT-TREATING ICEBOX RIVETS

Tempering is an important factor in riveting, especially with aluminum alloy rivets. These rivets have the same heat-treating characteristics as aluminum alloy sheet stock, and they can be hardened and annealed in the same manner as sheet aluminum. The rivet must be soft (or fairly soft) before a good shop head can be formed. The 2017-T4 and 2024-T4 rivets are softened by heat treating before being driven, and they harden with age.

Rivets are heat-treated according to MIL-H-6875G, MIL-H-6088F(1), and Industry Standard ASTM-8597-83. An electric air furnace or a salt bath is needed for heat treating. Temperatures for heat-treating range from 910° to 950°F (488° to 510°C), depending on the alloy being treated. For convenient handling, rivets are heated in a tray or a wire basket. Immediately after heat treating, the rivets are quenched in water at a temperature of about 70°F (21.1°C).

Because the 2017-T4 and 2024-T4 rivets, which are heat-treatable, begin to age-harden within a few minutes after being exposed to room temperature, they must either be used immediately or be put in cold storage.

Icebox rivets attain about half their maximum strength approximately one hour after driving and their full strength in about four days. 2017-T4 and 2024-T4 rivets that are exposed to room temperature for more than one hour or more than ten minutes respectively must be re-heat-treated.

Once an icebox rivet has been removed from the freezer, it should not be mixed with the rivets that are still in cold storage. If more rivets are removed from the icebox than can be used in 15 minutes, they should be placed in a separate container and stored for heat treating. Rivets may be heat-treated several times if this is done properly. Reheating too many times (15 or more) will result in a gradual hardening of the rivets. Rivets being coated for corrosion resistance should never be heated in a salt bath. Table 6-4 shows the proper heating times and temperatures for rivets.

The head markings of a rivet identify its composition. If the markings are not distinct, the hardness of the rivet can be determined by the Rockwell hardness tester described in Chapter 2 of this manual. To use this machine, place the rivet on a V-block anvil, use the 1/16-inch ball penetrator, and apply a 60-kilogram load. A reading of 75 or above on the B scale indicates that the rivet is age-hardened and heat-treatable.

SELECTION

The head type, size, and strength required in a rivet are governed by such factors as the kind of forces present at the point riveted, the type and thickness of the material to be riveted, and the location of the riveted part on the aircraft. The type of head needed for a particular job is determined by where it is to be installed. Countersunk-head rivets should be used where a smooth aerodynamic surface is required. Universal-head rivets may be used in most other areas. Refer to Chapter 8 for rivet layout information.

Diameter

The size (or diameter) of the rivet shank selected should correspond to the thickness of material being riveted. If too large a rivet is used in a thin material, the force needed to drive the rivet properly will cause an undesirable bulging around the rivet head. If too small a rivet diameter is used for thick material, the rivet will not have enough shear strength to carry the load of the joint. As a rule, the rivet diameter should be at least three times the thickness of the original

Table 6-4. Rivet heating times and temperatures

RIVET ALLOY	TEMPERATURE	TIME	
		AIR FURNACE	SALT BATH
2024	910° to 930°F (488° to 499°C)	1 hr	30 min
2017	925° to 950°F (496° to 510°C)	1 hr	30 min

Downloaded from http://www.everyspec.com

sheet. Rivets most commonly chosen in the assembly and repair of aircraft range from 3/32 to 1/4 inch in diameter. Ordinarily, rivets smaller than 3/32 inch in diameter are not used on any structural parts that carry stress. The size rivets to use for any repair can also be determined by referring to the rivets used by the manufacturer in the next parallel row inboard on the wing or forward on the fuselage. Another method of determining the size of rivets is to multiply the skin's thickness by 3 and use the next larger size rivet corresponding to that figure. For example, if the skin is 0.040 inch thick, multiply 0.040 inch by 3 to get 0.120 inch and use the next larger size of rivet, 1/8 inch (0.125 inch).

Length

To determine the length of a rivet to be installed, the formula is A = B + C is used. A is the overall length of the rivet shank. B refers to the combined thickness of the materials being joined together. This is known as grip length. C is the amount of rivet shank needed to form a proper shop head. This amount is equal to one and one-half times the rivet's diameter. Properly installed rivets are shown in Figure 6-1 (D and E). Grip lengths for universal-head and countersunk-head, solid-shank rivets are listed in Table 6-5.

Strength

For structural applications the strength of the replacement rivets is of primary importance. Rivets made of materials that are of low strength should not be used as replacements unless the shortfall is made up by using a larger rivet. For example, a rivet of 2024-T4 aluminum alloy should not be replaced with one of 2117-T4 or 2017-T4 aluminum alloy unless the next larger size is used. Table 6-6 gives the allowable shear strength for universal-head, dimple-countersunk, and machine-countersunk aluminum alloy rivets.

Refer to Table 6-6 to find shear strength. Shear strength is the amount required to cut a rivet that holds two or more sheets of material together. If the rivet holds two parts, it is under a single shear; if it holds three sheets or parts, it is under double shear. To determine the shear strength, first find the diameter of the rivet to be used by multiplying the thickness of the skin material by 3. For example, a material thickness of 0.040 inch multiplied by 3 equals 0.120 inch. In this case the rivet diameter selected would be 1/8 (0.125) inch.

CAUTION

Consider corrosion when choosing aircraft rivets. Corrosion affects aircraft rivets as it does almost all other metals. Corrosion may be caused by local climate for the fabrication methods used. The use of highly corrosion-resistant metals reduces it to a minimum. Corrosion resistance is generally considered adequate when the rivet material is the same or almost the same type as the structure being riveted and when the proper anticorrosion surface treatment has been applied.

Refer to Table 6-7 to find the bearing strength. Bearing strength is the amount of tension required to pull a rivet through the edge of two sheets riveted together or to elongate the hole. In order to use the bearing

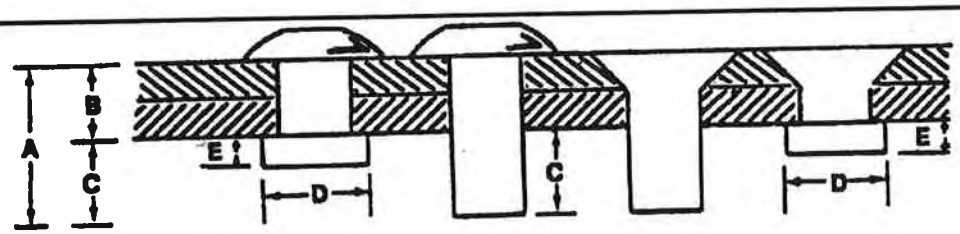

A - TOTAL RIVET LENGTH
B - GRIP LENGTH
C - AMOUNT OF RIVET LENGTH NEEDED FOR PROPER SHOP HEAD (1 - 1/2 X RIVET DIA)
D - INSTALLED RIVETS –SHOP HEAD WIDTH (1 1/2 RIVET DIAMETER)NOMINAL SIZE
E - INSTALLED RIVETS –SHOP HEAD HEIGHT (1/2 RIVET DIAMETER)NOMINAL SIZE

Figure 6-1. Factors in determining rivet length

Downloaded from http://www.everyspec.com

Table 6-5. Grip lengths for solid-shank rivets

CORRECT RIVET LENGTHS FOR UNIVERSAL-HEAD RIVETS						
DIAMETER		3/32	1/8	5/32	3/16	1/4
LENGTH OF RIVET (SEE NOTE 1)	DASH NUMBER FOR RIVET	GRIP	GRIP	GRIP	GRIP	GRIP
1/8	-2	0	0	0	0	0
3/16	-3	0.047	0	0	0	0
1/4	-4	0.109	0.062	0.016	0	0
5/16	-5	0.171	0.124	0.078	0.031	0
3/8	-6	0.234	0.187	0.141	0.094	0
7/16	-7	0.297	0.250	0.204	0.157	0.063
1/2	-8	0.359	0.312	0.266	0.219	0.125
9/16	-9	0.421	0.374	0.328	0.281	0.187
5/8	-10	0.484	0.437	0.391	0.344	0.250
11/16	-11	0.547	0.500	0.454	0.407	0.313
3/4	-12	0.609	0.562	0.516	0.469	0.375
13/16	-13	0.671	0.624	0.578	0.531	0.437
7/8	-14	0.734	0.687	0.641	0.594	0.500
15/16	-15	0.796	0.749	0.703	0.656	0.562
1	-16	0.859	0.812	0.766	0.719	0.625
CORRECT RIVET LENGTHS FOR COUNTERSUNK-HEAD RIVETS						
1/8	-2	0	0	0	0	0
3/16	-3	0.047	0	0	0	0
1/4	-4	0.109	0.062	0.016	0	0
5/16	-5	0.171	0.124	0.078	0.031	0
3/8	-6	0.234	0.187	0.141	0.094	0
7/16	-7	0.297	0.250	0.204	0.157	0.063
1/2	-8	0.359	0.312	0.266	0.219	0.125
9/16	-9	0.421	0.374	0.328	0.281	0.187
3/8	-10	0.484	0.437	0.391	0.344	0.250
11/16	-11	0.547	0.500	0.454	0.407	0.313
3/4	-12	0.609	0.562	0.516	0.469	0.375
13/16	-13	0.671	0.624	0.578	0.531	0.437
7/8	-14	0.734	0.687	0.641	0.594	0.500
15/16	-15	0.796	0.749	0.703	0.656	0.562
1	-16	0.859	0.812	0.766	0.719	0.625

NOTES:

1. When the grip length falls between those given in the table, select a rivet length nearest the desired length.
2. Dimensions are shown in inches.
3. Longer rivets than those indicated are available.

strength chart, the diameter of the rivet to be used and the thickness of the material being riveted must be known.

INSTALLATION

Riveting requires special hand and power tools.

Special Hand Tools

Special hand tools are used in the normal course of driving and upsetting rivets. They include—

- Hole duplicators.
- Rivet cutters.

Downloaded from http://www.everyspec.com

Table 6-6. Single-shear strength of aluminum alloy rivets

RIVET DIAMETER	3/32	1/8	5/32	3/16	1/4
UNIVERSAL - HEAD RIVETS					
2117-T4	217	389	596	860	1556
2017-T4	246	441	676	974	1764
2024-T4	296	532	814	1176	2127
5056	195	347	536	774	1400
100° DIMPLE COUNTERSUNK					
2117-T4	276	480	736	1020	
2017-T4	300	530	810	1130	
2024-T4	350	620	950	1325	
100° MACHINE COUNTERSUNK					
2117-T4	186	331	518	745	
2017-T4	206	368	574	828	
2024-T4	241	429	670	966	

Ultimate Shear Strength:	2117-T4	30,000 psi
	2017-T4	34,000 psi
	2024-T4	41,000 psi
	5056	27,000 psi

NOTES: 1. Shear strength is shown in pounds.
2. Dimensions are shown in inches.

Table 6-7. Bearing strength (pounds)--2117 rivet

Thickness of sheet (lb.)	Diameter of rivet (in)				
	3/32	1/8	5/32	3/16	1/4
0.014	107	143	179	215	287
0.016	123	164	204	246	328
0.018	139	184	230	276	369
0.020	153	205	256	307	410
0.025	192	256	320	284	512
0.032	245	328	409	492	656
0.040	307	410	512	615	820
0.050	383	512	640	767	1024
0.064	492	656	820	984	1312
0.072	553	738	922	1107	1476
0.081	622	830	1037	1245	1660
0.091	699	932	1167	1398	1864
0.102	784	1046	1307	1569	2092
0.125	961	1281	1602	1922	2563

Downloaded from http://www.everyspec.com

- Bucking bars.
- Hand rivet and draw sets.
- Countersinks.
- Dimpling dies.

The drills, reamers, and C-clamps needed to install rivets are described in Chapter 3 of this manual.

Hole Duplicator

When replacing sections of skin with new sections, drill the holes in the replacement sheet or patch to match existing holes in the structure. These holes can be located with a hole duplicator. The peg on the bottom leg of the duplicator fits into the existing rivet hole. The hole in the new part is made by drilling through the bushing on the top leg. If the duplicator is properly made, holes drilled in this manner will align perfectly. A separate duplicator must be used for each rivet diameter.

Rivet Cutters

Use rivet cutters to cut rivets to the desired length if those of the right length cannot be obtained. If regular rivet cutters are not available, you can use diagonal cutting pliers as an emergency cutter.

Bucking Bars

Bucking bars (Figure 6-2), sometimes called dollies, bucking irons, or bucking blocks, are designed to make rivet bucking easier wherever rivets are used. They come in several different shapes and sizes; their average weight is 6 pounds. Most bucking bars are made of alloy bar stock, but those that are made of better grades of steel last longer and require less reconditioning. Hold a bucking bar against the shank end of a rivet while the shop head is being formed. Keep bucking bars clean, smooth, and well-polished. Round their edges slightly to prevent marring the material around the riveting area. The bar usually has a concave face to conform to the shape of the shop head to be made. The radius of the face should be slightly larger than the thin head to ensure solid bucking and to prevent marring the material to be riveted.

Special bars, such as the expanding bucking bar, are needed to accomplish riveting in areas that are hard to reach. This bar is a steel block with adjustable diameter or width. It is attached to the end of a hollow steel shaft, which contains a bar that can be twisted to expand or reduce the width of the block. The expanding bucking bar is used to buck rivets inside tubular structures or in similar spaces where regular bucking bars cannot reach. These spaces must be small enough to allow one side of the partially expanded block to press against a strong supporting surface. Expanding bucking bars speed up the process of riveting the skin on wing sections.

Hand Rivet Set

A hand rivet set is a tool like a punch that has a die for driving a particular type of rivet. The ordinary set is made of 1/2-inch carbon tool steel, is about 6 inches long, and is knurled to prevent slipping in the hand. Only the face of the set is hardened and polished. Special draw sets are used to draw up the sheets and close any opening between them before the rivet is bucked. Each draw set has a hole 1/32 inch larger than the diameter of the rivet shank it is made for. Occasionally, the draw set and rivet header are incorporated into one tool. The header part consists of a hole shallow enough so that the set will expand and head the rivet when struck with a hammer.

Countersink

A countersink is a tool that cuts a cone-shaped depression around the rivet hole to allow the rivet to set flush with the surface of the skin (Figure 6-3). Countersinks are made with angles to correspond with the various angles of the countersunk rivet heads. The standard countersink has a 100° angle.

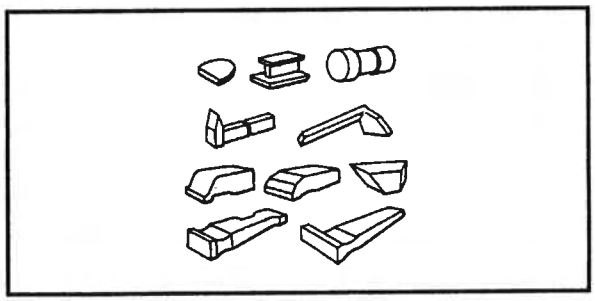

Figure 6-2. Bucking bars

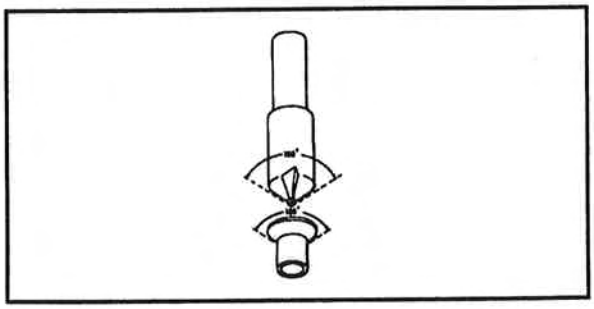

Figure 6-3. Standard countersink

Downloaded from http://www.everyspec.com

Special stop countersinks are available (Figure 6-4) that can be adjusted to any desired depth. They have cutters to allow interchangeable holes with various countersunk angles to be made. Some stop countersinks also have a micrometer set mechanism, in 0.001-inch increments, for adjusting their cutting depths.

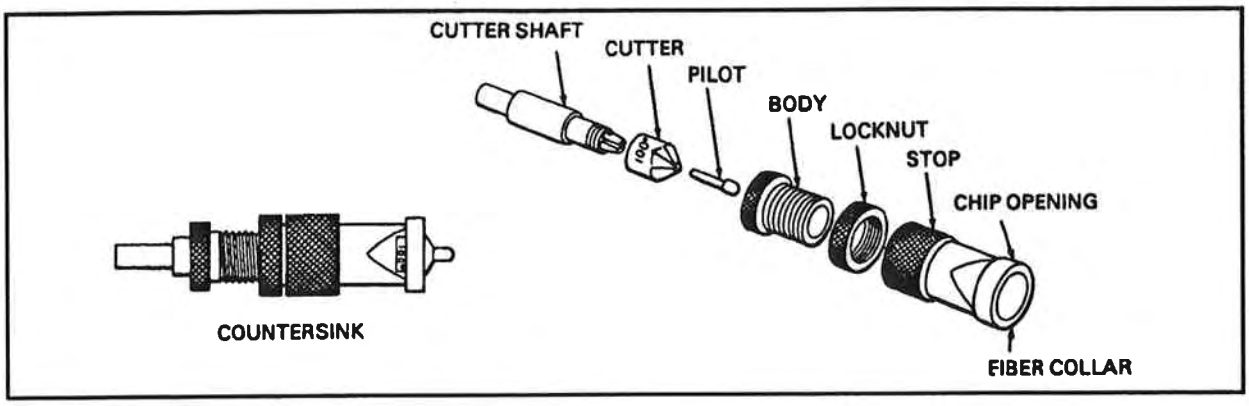

Figure 6-4. Stop countersinks

Dimpling Dies

Dimpling is the process of making an indentation or dimple around a rivet hole so that the top of the head of a countersunk rivet will be flush with one surface of the metal. Dimpling is done with a male and female die, often called a punch-and-die set. The male die has a guide the same size as the rivet hole and is beveled to correspond to the degree of countersink of the rivet head. The female die has a hole that the male guide fits into; it is beveled to a corresponding degree of countersink (Figure 6-5).

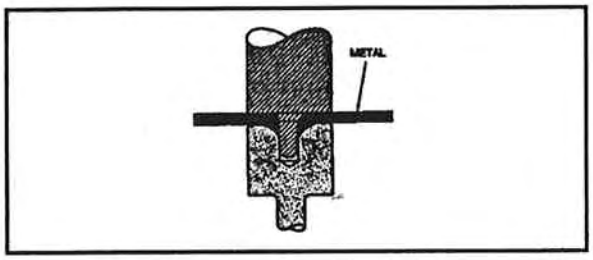

Figure 6-5. Radius dimpling

Dimpling dies are made to correspond to any size and degree of countersink rivet head that is available. They are usually numbered, and the right combination of punch and die to use is indicated on charts developed by the manufacturer. Both male and female dies are precisely machined and have highly polished surfaces. The male die or punch is cone-shaped to conform to the rivet head and has a small concentric pilot shaft that fits into the rivet hole and female die. In some cases the face of the male die is convex to allow for springback in the metal. This type of die is used to best advantage to dimple curved sheets. Dies with flat faces are mainly used for flat work. Dimpling dies can be used in portable pnuematic or hand squeezers for light work. When dies are used with a squeezer, they must be adjusted to the thickness of the sheet being dimpled.

Special Power Tools

Special power tools include the—

- Pneumatic hammer (rivet gun).
- Rivet squeezer.
- Microshaver.

Pneumatic Hammer

The most common upsetting tool used in airframe repair work is the pneumatic hammer, known as the rivet gun. These pnuematic rivet guns are available in various sizes and shapes (Figure 6-6).

CAUTION

1. Never point a rivet gun at anyone at any time.

2. Never depress the trigger mechanism unless the set is held tightly against a block of wood or a rivet.

3. Never use the rivet gun as a toy. It is not a plaything but a tool to be used correctly to do a job.

4. Always disconnect the air hose from the rivet gun if it will not be used for some time.

Downloaded from http://www.everyspec.com

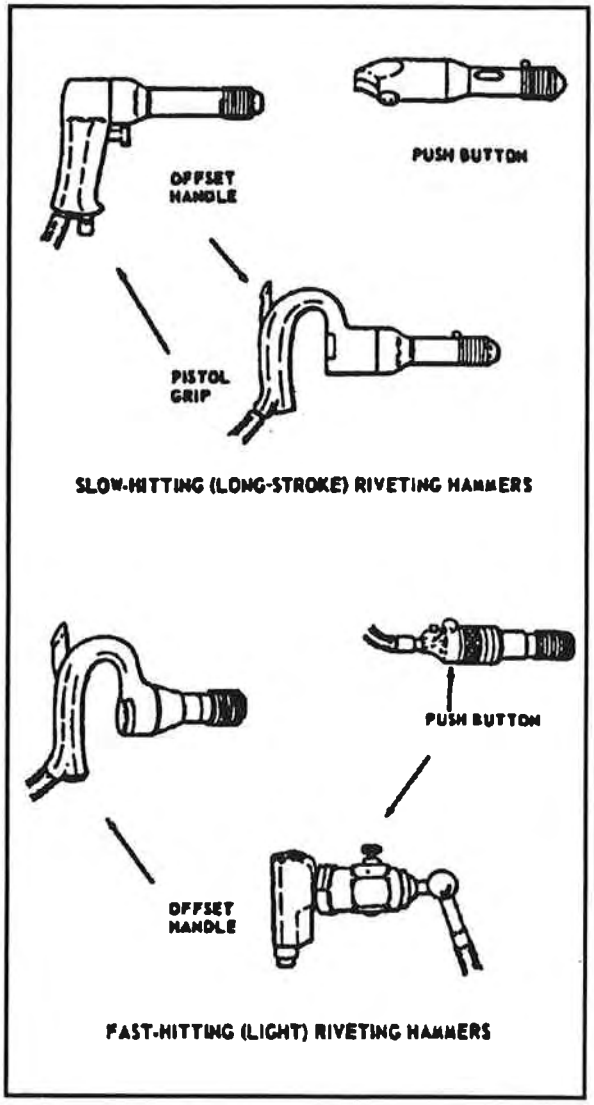

Figure 6-6. Pneumatic rivet gun

The manufacturer's recommended capacity for each gun is usually stamped on the barrel. Pneumatic guns operate on air pressures of 90 to 100 psi and are used in conjunction with interchangeable rivet sets. Each set is designed to fit the specific type of rivet and the location of the work. The shank of the set is designed to fit into the rivet gun. An air-driven hammer inside the barrel of the gun supplies force to buck the rivet.

Rivet Squeezer

Rivet squeezers are of limited value because this method of riveting can only be used over the edges of sheets or assemblies where conditions permit and where the rivet squeezer has a deep enough reach. There are two types of rivet squeezers: hand and pneumatic (Figure 6-7). Basically alike, the hand rivet squeezer operates by hand pressure and the pneumatic rivet squeezer by air pressure. In both types a stationary jaw serves as a bucking bar and a movable jaw does the upsetting. Some rivet squeezers have either a C-yoke or an alligator yoke to control the plunger's stroke or the movement of the movable jaw. Yokes are available in various sizes to accommodate any size rivet. The working capacity of a yoke is measured by its gap and reach. Gap is the distance between the movable jaw and the stationary jaw; reach is the inside length of the throat measured from the center of the end sets.

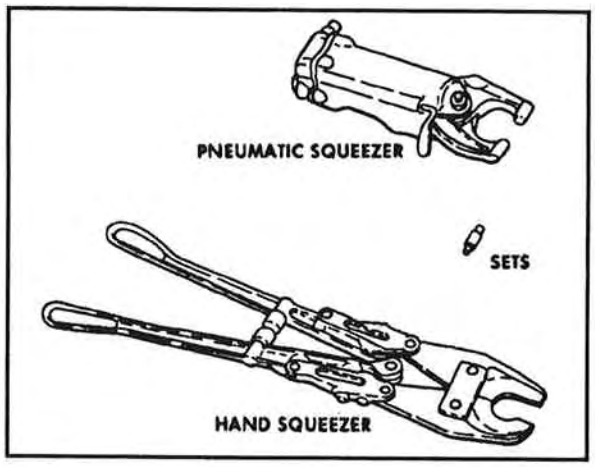

Figure 6-7. Rivet squeezers

For squeezers that are not equipped with a gap regulator, the gap can be adjusted by placing metal shims under the end sets of both jaws or by using end sets of different lengths. End sets for rivet squeezers serve the same purpose as rivet sets for pneumatic rivet guns and are available with the same type of heads. They are interchangeable to suit any type of rivet head. One part of each set is inserted in the stationary jaw, while the other part is placed in the movable jaws. The manufactured head end set is placed on the stationary jaw whenever possible. However, during some operations it may be necessary to reverse the end sets, placing the manufactured head end set on the movable jaw.

Microshaver

A microshaver (Figure 6-8) is used if the smoothness of the material (such as the skin) requires that all countersunk rivets be driven within a specific tolerance. This tool has a cutter, a stop, and two legs or stabilizers.

Downloaded from http://www.everyspec.com

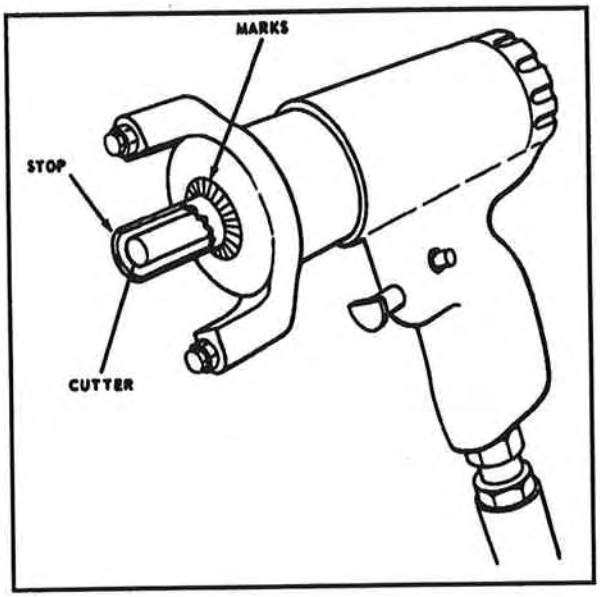

Figure 6-8. Microshaver

The cutting portion of the microshaver is inside the stop. The depth of the cut can be adjusted by pulling outward on the stop and turning it in either direction (clockwise for deeper cuts). The marks on the stop permit adjustments of 0.001 inch. If the microshaver is adjusted and held correctly, it will cut the head of a countersunk rivet to within 0.002 inch without damaging the surrounding material. When correctly adjusted, the microshaver will leave a small round dot about the size of a pinhead on the microshaved rivet.

Drilling

After the rivets have been selected, the riveting process begins with drilling the rivet holes. These holes must be 0.002 to 0.004 larger than the rivet diameter and free from burrs. If holes are too small, the protective coating will be scratched from the rivets when they are driven through them. If the holes are too large, the rivets will not fill them completely when they are bucked; the joints will not develop their full strength and there could be structural failure. To make a rivet hole of the proper size, a slightly undersized hole should be drilled first. This is known as predrilling, and the hole is called a pilot hole. The pilot hole is then redrilled (reamed) with a twist drill of the appropriate size (Table 6-8). For small patches and repairs pilot drilling is not normally required. For hard metals a twist drill with an included angle of 118° should be selected and turned at low speeds. For soft metals a twist drill with an included angle of 90° should be used and turned at higher speeds. A drill with an included angle of 118° is more accurate in drilling thin sheets of aluminum alloys because the larger angle of this drill reduces its tendency to tear or elongate the hole. Punch locations for rivet holes must be centered before the actual drilling begins. The center punch mark acts as a guide that allows the drill to grip or bite into the metal more easily. Make the punch mark large enough to prevent the drill from slipping out of place, but punch it lightly enough so as not to dent the surrounding material. When drilling, hold a hard, smooth wooden backing block securely in position

Table 6-8. Pilot and reaming twist drill

RIVET DIAMETER (IN)	PILOT SIZE (IN)	REAM SIZE (IN)
3/32	3/32(0.0937)	41(0.096)
1/8	1/8(0.125)	30(0.1285)
5/32	3/32(0.1562)	21(0.159)
3/16	3/16(0.1875)	11(0.191)
1/4	1/4(0.250)[a]	F(0.257)
5/16	5/16(0.3125)	O(0.316)
3/8	3/8(0.375)	V(0.377)

[a]Note that ream size exceeds the maximum tolerance of 0.004 inch. This is allowable only if the next larger drill size exceeds 0.004 inch.

Downloaded from http://www.everyspec.com

behind the hole locations. Remove all burrs with a burr remover before riveting. If countersinking is required, the thickness of the metal must be considered (see discussion on countersinking below and in Table 6-9). If dimpling is required, keep hammer blows or dimpling pressures to a minimum so that no undue work hardening occurs in the area around the holes.

provides general recommendations for selecting a method.

Figure 6-9 shows examples of preferred, permissible, and unacceptable countersinking. In the example (preferred), the material is quite thick, and the head of the countersunk rivet extends only about halfway through the upper layer of metal. Countersinking will leave plenty of material for gripping, but buckling

Table 6-9. Selecting countersinking methods

DIAMETER OF RIVET (IN)	TOP SHEET THICKNESS (IN)	UNDER SHEET THICKNESS (IN)	USE COUNTERSINK METHOD
3/32	0.032 or greater		a
	0.025 or less	0.050 or greater	b
	0.025 or less	0.040 or less	c
1/8	0.040 or greater		a
	0.032 or less	0.064 or greater	b
	0.032 or less	0.050 or less	c
5/32	0.050 or greater		a
	0.040 or less	0.072 or greater	b
	0.040 or less	0.064 or less	c
3/16	0.064 or greater		a
	0.050 or less	0.090 or greater	b
	0.050 or less	0.080 or less	c

[a]Machine-countersink (cut) top sheet.
[b]Press-countersink (dimple) top sheet and machine-countersink under sheet(s).
[c]Press-countersink (dimple) to and under sheets.

Countersinking and Dimpling

The two methods of countersinking commonly used for flush riveting in aircraft construction repair are machine or drill countersinking and dimpling or press countersinking. The method to apply in any particular case depends on the thickness of the parts to be riveted, the height and angle of the countersunk head, the tools available, and accessibility. Table 6-9

of the material is impossible. In the middle example (permissible), the countersunk head reaches completely through the upper layer. This is allowed but not recommended. In the example on the right (unacceptable), the head extends well into the second layer of material. This indicates that the material is thin and that most of it would be ground away by drill countersinking; therefore, countersinking is not acceptable and dimpling is preferred. Dimpling will

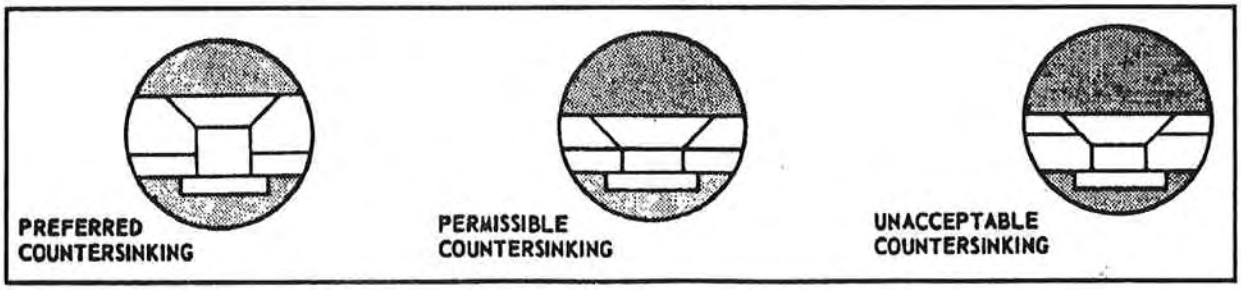

Figure 6-9. Countersinking practices

Downloaded from http://www.everyspec.com

work best if the material is not more than 0.040 inch thick.

Machine (Drill) Countersinking

Machine or drill countersinking is done with a suitable cutting tool machined to the desired angle that cuts away the edge of the hole so that the countersunk head rivet fits snugly into the resulting recess, known as the well or nest. When countersinking is required, the rivet hole should be drilled with a pilot drill as indicated in Table 6-8. In most cases, the head of the rivet may not extend more than 0.004 inch above or below the surface of the metal. Therefore, the countersinking must be performed accurately, using equipment that can produce results within the specified tolerance. The countersinking tool must be held firmly at right angles to the material. It must not be tipped because tipping elongates the well and prevents the countersunk rivet head from fitting properly. Elongated wells are caused by—

- Oversized rivet holes.
- Undersized countersink pilots (in the case of the stop countersink).
- Chattering due to the improper use or poor condition of the countersink.
- Failure of a countersink to run true in the drill chuck.

Press Countersinking (Dimpling)

Press countersinking or dimpling can be done by either of two methods. The male and female die sets may be used, or the rivet may be used as the male die and the draw die as the female die. In either case, the metal immediately around the rivet hole is pressed to the proper shape to fit the rivet head. The depression formed by pressing is known as the well or nest, as in machine countersinking. To obtain maximum strength, the rivet must fit in the well snugly. The number of sheets that can be dimpled at the same time is limited by the capability of the equipment used. When dimpling a hole—

- Rest the female die on a solid surface.
- Place the material on the female die.
- Insert the male die in the hole to be dimpled.
- Hammer the male die with several solid blows until the dimple is formed.

In die dimpling the pilot hole of the female die should be smaller in diameter than the diameter of the rivet to be used. Therefore, after the dimpling is completed, the rivet hole must be reamed to the exact diameter that will allow the rivet to fit snugly. When using a countersink rivet as the male dimpling die, the female die is placed in the usual position and backed with a bucking bar. A rivet of the required type is inserted in the hole and struck with a pneumatic riveting hammer. This method of countersinking is often called coin pressing. Use it only when a regular male die is not available.

> NOTE: Coin pressing has a distinct disadvantage in that the rivet hole must be drilled to the correct rivet size before dimpling. Since metal stretches during dimpling, the hole becomes enlarged and the rivet must be swelled slightly before driving to produce a close fit.

Driving Rivets

Selection of the right bucking bar is important because if the bar does not have the correct shape, it will deform the rivet head. If it is too light, it will not provide the necessary bucking weight and the material may become bulged toward the shop head. If the bar is too heavy, the weight on the bucking force may cause the material to bulge away from the shop head. Table 6-10 shows the bucking bar weights recommended for use with various sizes of rivets. Rivets may be driven by hand, pneumatic, or squeeze method.

Hand Riveting

Riveting by hand may be done in either of two ways, depending on the location and accessibility of the work. In one technique, the rivet is driven from the head end with a hand set and hammer and bucked from the shank end. In the other method, it is driven from the shank end with a hand set and hammer and bucked from the head with a hand set held in a vise or a bottle bar (a special bucking bar recessed to hold a rivet set). The second method is known as reverse riveting. It is commonly used in hand riveting but not considered good practice in pnuematic riveting. Keep hammer strokes to a minimum when using either of these two methods. Too much hammering will change the crystalline structure of the rivet or the material around it, causing the joint to lose some of its strength. The bucking bar and rivet set should be held square with the rivet at all times. Misuse of the bucking bar and rivet set will result in a marred or scratched rivet head or material and can cause undue

Downloaded from http://www.everyspec.com

Table 6-10. Recomended bucking bar weight

RIVET DIAMETER (IN)	APPROXIMATE WEIGHT (LB)
3/32	1 to 2
1/8	1 to 3
5/32	2 to 4
3/16	3 to 5
1/4	4 to 6 1/2

corrosion, which will weaken the structure of the aircraft. The diameter of a properly formed shop head should be one and a half times the diameter of the rivet shank; the height should be about half the diameter.

Pneumatic Riveting

In pneumatic riveting the pressure for bucking the rivet is applied with a rivet set and a pnuematic rivet gun. When using a pneumatic rivet gun, hold the rivet gun and bucking bar at right angles to the work and apply enough pressure to prevent the bucking bar from jumping off. Figure 6-10 shows typical riveting procedures using a pneumatic rivet gun. If a long row of rivets is to be driven, you can save time by inserting several rivets in the holes and holding them in place with a strip of masking tape over their heads. The rivet gun may be placed on the rivets without removing the tape. The tape serves a double purpose: it holds the rivets in place, and it forms a cushion to prevent the rivet set from damaging the material.

WARNING

Be very careful when using a pneumatic rivet gun. If a rivet set is placed in a pneumatic rivet gun without a set retainer and the throttle of the gun is open, the rivet set could be projected out of the gun like a bullet and cause severe personnel injury, equipment damage, or both.

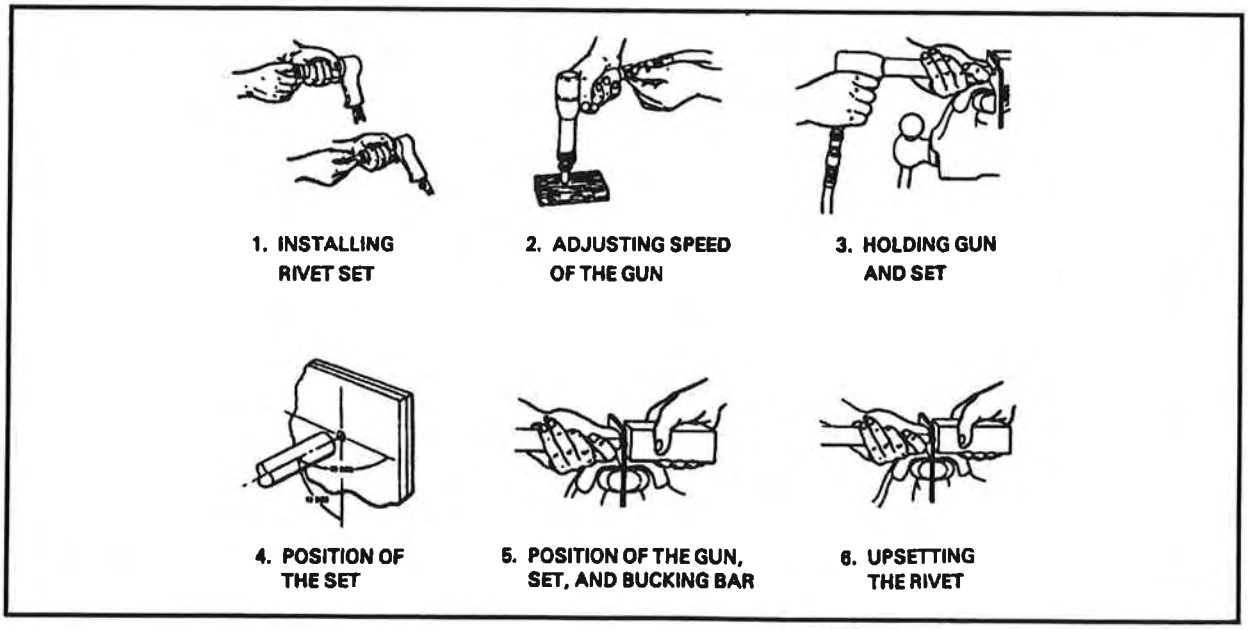

Figure 6-10. Riveting procedures using a pneumatic rivet gun

Downloaded from http://www.everyspec.com

Squeeze Riveting

The squeeze method of riveting is used only for the edges of sheets or assemblies, although it produces the most uniform and balanced type of head. In this method, each rivet is upset in a single operation, all rivets are headed over with uniform pressure, and each rivet shank is expanded uniformly to fill each rivet hole completely. Riveting with a squeezer is quick and requires only one operator. To install rivets by this method—

- Select and insert suitable end sets to match the rivet being used.
- Place the stationary jaw of the squeezer on the rivet head.
- Use the squeezer's movable jaw to upset the rivet shank.

INSPECTION

Rivet Failure

In general, the design of riveted joints is based on the principle that the total joint strength is the sum of the individual strengths of a group of rivets. Obviously, if any one rivet fails, its load must immediately be carried by others in the group. If they cannot carry the added load, the joints will fail one after another. Stress concentrations will usually cause one rivet to fail first. Analysis of such a rivet in a joint will show that it has been too highly loaded and that neighboring rivets may also have partially failed. Underload rivets are subject to three types of failure: shear, bearing, and head failure.

Shear Failure

Shear failure is perhaps the most common type of rivet failure. It is a breakdown of the rivet shank by forces acting along the plane of two adjacent sheets; this causes a slipping action that can be severe enough to break the rivet shank in two. If the shank becomes loaded beyond the yield point of the material and remains overloaded, a permanent shift is established in the sheets and the rivet shank can become joggled.

Bearing Failure

If the rivet is too strong in shear, bearing failure occurs in the sheet at the edge of the rivet hole. Applying large rivets in thin sheets causes this type of failure. The sheet is locally crushed or buckled and the buckling destroys the rigidity of the joint. Vibrations set up by engine operations or by air currents in flight can cause the buckled portion to flutter and the material to break off close to the rivet head. If buckling occurs at the end of the sheet, a tear-out may result. In either case, the sheet must be replaced.

Head Failure

Head failure may result from complex loadings occurring at a joint; this causes tension stresses to be applied to the rivet head. The head can fail by shearing through the area corresponding to the rivet shank or, in thicker sheets, through a prying action that causes the head itself to fail. If there is any visible distortion of the head, the rivet should be replaced.

Inspection Procedures

Inspection consists of examining the shop and manufactured heads and the surrounding skin and structural parts of the aircraft for deformities. A straightedge (Figure 6-11) or rivet gage (Figure 6-12) can be used to check the condition of the upset rivet head. Deformities in the manufactured heads of universal-head rivets may be detected visually. On countersunk-head rivets, a straightedge may be used.

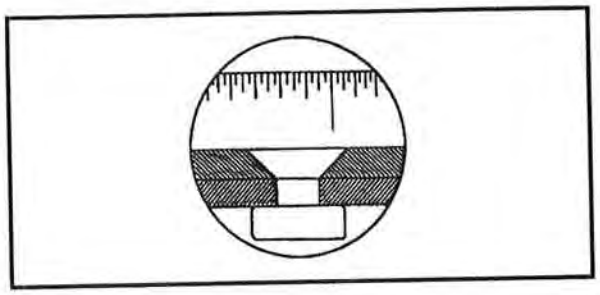

Figure 6-11. Straightedge used to gage rivets

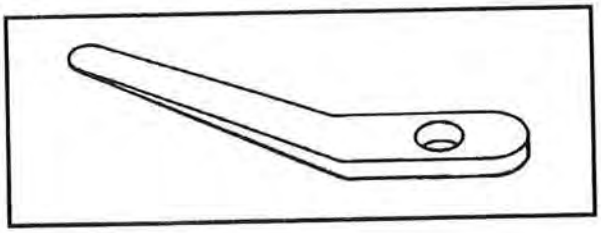

Figure 6-12. Rivet gage

When repairing an aircraft structural part, examine adjacent parts to determine the condition of neighboring rivets. Chipped or cracked paint around the heads may indicate shifted or loose rivets. If the heads are tipped or if rivets are loose, they will show up in groups of several consecutive rivets and will

Downloaded from http://www.everyspec.com

probably be tipped in the same direction. If heads that appear to be tipped are not in groups or tipped in the same direction, tipping may have occurred during some previous installation.

Rivets known to have been critically loaded which show no visible distortion must be inspected by drilling off the head and carefully punching out the shank. If the shank appears joggled on examination and the holes in the sheet are misaligned, the rivet has failed in shear. In that case, determine the cause of the shearing stress and take corrective action. Countersunk rivets that show head slippage within the countersink or dimple (indicating sheet bearing or rivet shear failure) must be replaced.

> NOTE: A rivet must usually be replaced by one of the next larger size (1/32 inch greater in diameter)in order to get the proper joint strength of rivet and sheet when the original rivet hole is enlarged. If the rivet in an elongated hole is replaced by a rivet of the same size, the ability of the rivet to carry its share of the shear is impaired, resulting in weakness in the joints.

Joggles in removed rivet shanks indicate partial shear failure. These rivets must be replaced with the next larger size. If the rivet holes appear elongated, they too must be replaced with the next larger size. Sheet failures (such as tear-outs and cracks between rivets) indicate damaged rivets. Complete repair of the joint may require replacing these rivets with the next larger size.

REMOVAL

When a rivet must be replaced, remove it carefully so that the rivet hole will retain its original size and shape and you will not need to replace it with one of the next larger size. If the rivet is not removed properly, the strength of the joint may weaken. Hand tools, power tools, or a combination of both may be used to remove rivets.

Protruding-Head Rivet

To remove a protruding-head rivet:

- File a flat area on the manufactured head of protruding-head rivets with a special modified file if needed, and center-punch the flat surface (Figure 6-13).

NOTE: On thin metal, back up the rivet on the upset head when center punching to avoid depressing the metal.

- Use a drill one size smaller than the rivet shank to drill throught the rivet head. Be careful not to drill too deep because the rivet shank will then turn with the drill and cause a tear.
- Insert a drift punch diagonally into the drilled hole and knock the head off by lightly striking the drift punch.
- Drive the rivet shank out with a drift punch slightly smaller than the diameter of the shank. On thin metal or unsupported structures, support the sheet with a bucking bar while driving out the shank. If the shank is unusually tight after the rivet head is removed, drill the rivet about two-thirds through the thickness of the material; then drive the rest of it out with a drift punch.

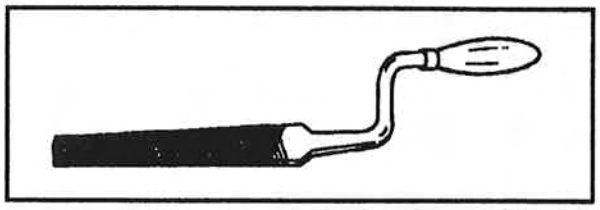

Figure 6-13. Modified file for filing rivet heads

Countersunk-Head Rivet

If the manufactured head on countersunk rivets is accessible and has been formed over heavy material, such as an extruded member, the head can be drilled through and sheared off as described. If the material is thin, the shank must be drilled through and the formed head must then be cut off with diagonal cutting pliers. The rest of the rivet can then be driven out from the inside with a drift punch.

Section II. Special Rivets

TYPES

Special rivets are used where there is no access to both sides of a riveted structure or structural part or where there is not enough space to use a bucking bar. These rivets are made by several manufacturers. They have unique characteristics that require special tools to install and special procedures to install and remove. Because special rivets are often installed in places where one head (usually the shop head) cannot be seen, they are also called blind rivets.

Downloaded from http://www.everyspec.com

MECHANICALLY EXPANDED RIVETS

There are two type of mechanically expanded rivets: self-plugging (friction-lock) and self-plugging (mechanical-lock).

Self-Plugging (Friction-Lock) Rivets

Rivets are constructed in two parts:

- A rivet head with a hollow shank or sleeve.
- A stem that extends through the hollow shank.

Two common head styles are available: a protruding head and a 100° countersunk head. The stem may have a knob on the upper portion, or it may have a serrated portion as shown in Tables 6-11 and 6-12. These rivets are available in 2117 and 5056 aluminum alloy and nickel-copper alloy (Monel).

Rivets of this type are shear-type fasteners. They will not be used where there are appreciable tensile loads on them, such as control surface hinge brackets, wing attachment fittings, landing gear fittings, fixed tail surface attachment fittings, or in other similar heavily stressed areas. Nor will they be used in hulls, floats, or tanks where a gas-tight joint is required. Because access to the opposite side of the work is not necessary, self-plugging (friction-lock) rivets can be used to attach assemblies to hollow tubes, corrugated sheet, hollow boxes, and so on. Because a hammering force is not needed to install the rivets, they can be used to attach assemblies to plywood or plastic.

Selection

Factors to consider when selecting the rivets are place of installation, composition and thickness of material being riveted, and desired strength. If the rivet is to be installed on an aërodynamically smooth surface or if clearance for an assembly is needed, select flush-head rivets. In other areas, where clearance or smoothness is not a factor, the protruding-head type of rivet may be used. The composition of the rivet depends on the type of material being riveted. Aluminum alloy 2117 rivets can be used on most aluminum alloys. Use aluminum alloy 5056 rivets if the material being riveted is magnesium. Always select Monel rivets for assemblies fabricated from steel. The thickness of the material being riveted determines the overall length of the rivet shank.

Installation

The tools used to install self-plugging (friction-lock) rivets depend on the manufacturer of the rivet being installed. Each manufacturer has designed special tools that should always be used with the product to ensure satisfactory results. Both hand tools and pneumatic tools are available. Use standard twist drills. Both manually and power-operated guns are manufactured for pulling the stem of the rivet. The nomenclature of the various available tools and assemblies depends on the manufacturer, but the equipment is applied and used in basically the same manner. All of these tools, whether referred to as hand tools, air tools, hand guns, or pneumatic guns, are used for the same purpose—to install a rivet properly. The most important portion of the tool or gun is the part that is placed on the rivet. Regardless of whether this part is called a nose assembly or a sleeve and drawbolt, the user should make sure it is the same size as the rivet shank diameter. Pneumatic tools operate with the same air pressure as pneumatic riveting hammers: 90 to 100 pounds per square inch. Follow the operational procedures and adjustments recommeded by the manufacturer.

The procedures for installing self-plugging (friction-lock) rivets are basically the same as those for common solid-shank rivets:

- Select the rivet to be installed.
- Use Table 6-13 to determine hole size and then drill holes.
- Select a gun based on the shank diameter of the rivet, its manufacturer, and the number of rivets to be installed. Position this gun on the rivet stem.
- Apply pulling force to the rivet stem until it snaps.
- Check the installation of the rivet by applying about 15 pounds of pressure to the end of the stem.
- Trim the stem flush with the rivet head, using a pair of diagonal pliers ground smooth on the cutting side.

Inspection

Often, inspecting the head of a rivet is the only inspection that can be made on self-plugging (friction-lock) rivets. The rivet head, whether protruding or countersunk, should fit tightly against the metal and its stem should be trimmed flush with the head.

Downloaded from http://www.everyspec.com

Table 6-11. MS20600 Rivet identification (protruding-head)

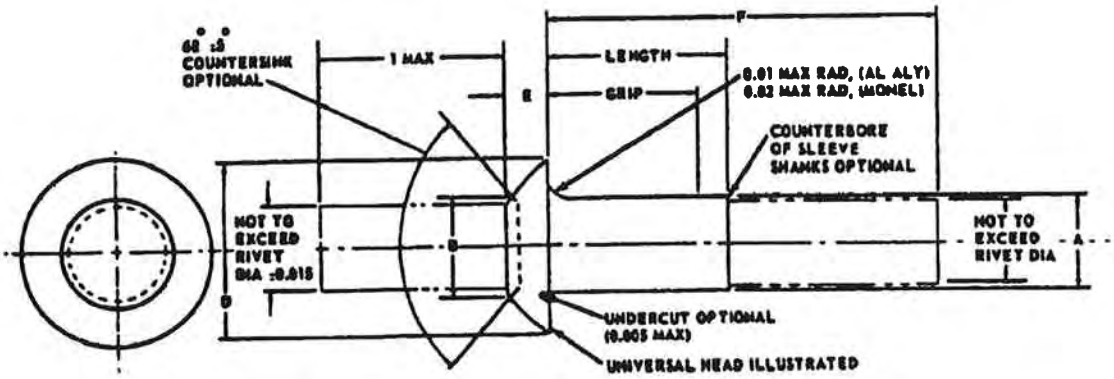

RIVET SIZE NOM DIA	A -0.003 -0.001 DIA	UNIVERSAL HEAD D DIA	UNIVERSAL HEAD E -0.010 -0.000	B MAX
1/8	0.126	0.250-0.312	0.054	0.110
5/32	0.156	0.312-0.016	0.067	0.130
3/16	0.187	0.375-0.019	0.080	0.161
1/4	0.250	0.500-0.025	0.107	0.215

K KNOB STEM

W SERRATED STEM

1/8 RIVET DIAMETER, NOMINAL				5/32 RIVET DIAMETER, NOMINAL				3/16 RIVET DIAMETER, NOMINAL				1/4 RIVET DIAMETER, NOMINAL			
GRIP RANGE		LENGTH MAX	F MAX	GRIP RANGE		LENGTH MAX	F MAX	GRIP RANGE		LENGTH MAX	F MAX	GRIP RANGE		LENGTH MAX	F MAX
MIN	MAX			MIN	MAX			MIN	MAX			MIN	MAX		
UP TO	0.063	0.170	0.500	UP TO	0.063	0.192	0.558	UP TO	0.063	0.215	0.638	0.125	0.187	0.385	0.970
0.063	0.125	0.232	0.600	0.063	0.125	0.254	0.620	0.063	0.125	0.277	0.700	0.188	0.250	0.447	1.090
0.126	0.187	0.295	0.750	0.126	0.187	0.317	0.800	0.126	0.187	0.340	0.880	0.251	0.312	0.510	1.220
0.188	0.250	0.357	0.880	0.188	0.250	0.379	0.870	0.188	0.250	0.402	0.950	0.313	0.375	0.572	1.340
0.251	0.312	0.420	1.010	0.251	0.312	0.441	1.050	0.251	0.312	0.465	1.130	0.376	0.437	0.635	1.470
0.313	0.375	0.482	1.100	0.313	0.375	0.503	1.120	0.313	0.375	0.527	1.200	0.438	0.500	0.697	1.590
				0.376	0.437	0.567	1.330	0.376	0.437	0.590	1.419	0.501	0.562	0.760	1.720
				0.438	0.500	0.629	1.401	0.438	0.500	0.652	1.481	0.563	0.625	0.832	1.840
								0.501	0.562	0.715	1.637	0.626	0.687	0.885	1.970
								0.563	0.625	0.777	1.699	0.688	0.750	0.947	2.090
								0.626	0.687	0.840	1.867	0.751	0.812	1.010	2.220
								0.688	0.750	0.902	1.949	0.813	0.875	1.072	2.340

NOTES:
1. ADD AB IN PLACE OF DASH TO INDICATE ALUMINUM ALLOY, COMPOSITION 2117.
2. ADD B IN PLACE OF DASH TO INDICATE ALUMINUM ALLOY, COMPOSITION 5056.
3. ADD M IN PLACE OF DASH TO INDICATE NICKEL-COPPER-ALLOY (MONEL).
4. ADD P AFTER MATERIAL DESIGNATION TO INDICATE CADMIUM PLATE.
5. ADD IDENTIFICATION CODE LETTERS AFTER DASH NUMBER TO INDICATE TYPE OF RIVET BASED ON METHOD OF INSTALLATION.
6. ADD K TO INDICATE KNOB STEM RIVET.
7. ADD W TO INDICATE SERRATED STEM RIVET.
8. NO LETTER INDICATES A COMPLETE RIVET WITH TYPE OF STEM OPTIONAL.
9. EXAMPLES OF PART NUMBERS:
   MS20600DAD5-5 RIVET, 2117 ALUMINUM ALLOY SLEEVE, 0.156-INCH DIA, TYPE OF STEM OPTIONAL, 0.251-TO 0.312-INCH GRIP RANGE.
   MS20600B5KB - RIVET, 5056 ALUMINUM ALLOY SLEEVE, 0.156-INCH DIA, KNOB STEM, 0.251-TO 0.312-INCH GRIP RANGE.
   MS20600M5WS - RIVET, NICKEL-COPPER-ALLOY (MONEL) SLEEVE, 0.156-INCH DIA, SERRATED STEM, 0.251-TO 0.312-INCH GRIP RANGE.
   MS20600MPSWS - RIVET, NICKEL-COPPER-ALLOY (MONEL) SLEEVE, CADMIUM PLATED, 0.156-INCH DIA, SERRATED STEM, 0.251-TO 0.312-INCH GRIP RANGE.
10. DIMENSIONS SHOWN ARE IN INCHES.

Downloaded from http://www.everyspec.com

Table 6-12. MS20601 Rivet identification (flush-head)

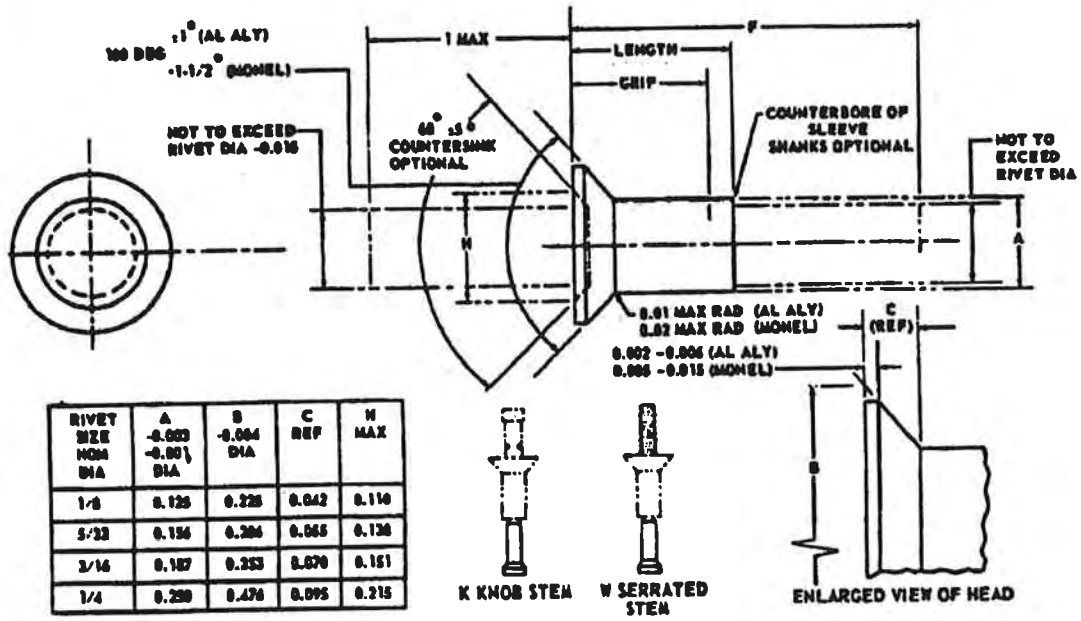

RIVET SIZE NOM DIA	A -0.003 -0.001 DIA	B -0.004 DIA	C REF	H MAX
1/8	0.125	0.225	0.042	0.110
5/32	0.156	0.284	0.055	0.130
3/16	0.187	0.253	0.070	0.151
1/4	0.250	0.476	0.095	0.215

3/32 RIVET DIAMETER, NOMINAL				1/8 RIVET DIAMETER, NOMINAL				3/16 RIVET DIAMETER, NOMINAL				1/4 RIVET DIAMETER, NOMINAL			
GRIP RANGE		LENGTH MAX	F MAX	GRIP RANGE		LENGTH MAX	F MAX	GRIP RANGE		LENGTH MAX	F MAX	GRIP RANGE		LENGTH MAX	F MAX
MIN	MAX			MIN	MAX			MIN	MAX			MIN	MAX		
0.063	0.125	0.254	0.439	UP TO	0.062	0.170	0.500	0.000	0.125	0.277	0.700	0.125	0.187	0.383	0.968
0.126	0.187	0.317	0.500	0.063	0.125	0.232	0.562	0.126	0.187	0.340	0.888	0.188	0.250	0.447	1.030
0.188	0.250	0.379	0.670	0.126	0.187	0.295	0.750	0.188	0.250	0.402	0.950	0.251	0.312	0.510	1.210
0.251	0.312	0.441	0.856	0.188	0.250	0.357	0.812	0.251	0.312	0.465	1.138	0.313	0.375	0.572	1.280
0.313	0.375	0.503	1.120	0.251	0.312	0.420	1.010	0.313	0.375	0.527	1.200	0.376	0.437	0.635	1.460
0.376	0.437	0.567	1.339	0.313	0.375	0.482	1.072	0.376	0.437	0.590	1.419	0.438	0.500	0.697	1.530
0.438	0.500	0.629	1.401					0.438	0.500	0.652	1.481	0.501	0.562	0.760	1.710
								0.501	0.562	0.715	1.637	0.563	0.625	0.822	1.780
								0.563	0.625	0.777	1.699	0.626	0.687	0.885	1.948
								0.626	0.687	0.840	1.867	0.688	0.750	0.947	2.030
								0.688	0.750	0.902	1.949	0.751	0.812	1.010	2.218
												0.813	0.875	1.072	2.280

NOTES:
1. ADD AD IN PLACE OF DASH TO INDICATE ALUMINUM ALLOY, COMPOSITION 2117.
2. ADD B IN PLACE OF DASH TO INDICATE ALUMINUM ALLOY, COMPOSITION 5056.
3. ADD M IN PLACE OF DASH TO INDICATE NICKEL-COPPER-ALLOY (MONEL).
4. ADD P AFTER MATERIAL DESIGNATION TO INDICATE CADMIUM PLATE.
5. RIVET STEM IDENTIFICATION CODE LETTERS MAY BE ADDED AFTER THE DASH NUMBER TO SPECIFY THE TYPE OF RIVET STEM BASED ON METHOD OF INSTALLATION.
6. ADD K TO INDICATE KNOB STEM RIVET.
7. ADD W TO INDICATE SERRATED STEM RIVET.
8. NO LETTER INDICATES A COMPLETE RIVET WITH TYPE OF STEM OPTIONAL.
9. EXAMPLES OF PART NUMBERS:
   - MS20601AD6-5 – RIVET, 2117 ALUMINUM ALLOY SLEEVE, 0.156-INCH DIA, TYPE OF STEM OPTIONAL, 0.251-TO 0.312-INCH GRIP RANGE.
   - MS20601B5K5 – RIVET, 5056, ALUMINUM ALLOY SLEEVE, 0.156-INCH DIA, KNOB STEM, 0.251-TO 0.312-INCH GRIP RANGE.
   - MS20601M5W5 – RIVET, NICKEL-COPPER-ALLOY (MONEL) SLEEVE, 0.156-INCH DIA, SERRATED STEM, 0.25-1TO 0.312-INCH GRIP RANGE.
   - MS20601MP5W5 – RIVET, NICKEL-COPPER-ALLOY (MONEL) SLEEVE, CADMIUM PLATED, 0.156-INCH DIA, SERRATED STEM, 0.251-TO 0.312-INCH GRIP RANGE.
10. DIMENSIONS SHOWN ARE IN INCHES.

Downloaded from http://www.everyspec.com

Table 6-13. Hole and drill sizes for self-plugging (friction-lock) rivets

RIVET DIAM (IN)	HOLE SIZE (IN)	DIMENSION SIZE
1/8	0.129-0.132	30
5/32	0.160-0.164	20
3/16	0.192-0.196	10
1/4	0.256-0.261	F

Removal

Self-plugging (friction-lock) rivets are removed in the same manner as solid-shank rivets, except for the preliminary step of driving out the stem:

- Punch out the rivet stem with a pin punch.
- Drill out the rivet head, using a drill the same size as the rivet shank.
- Pry off the weakened rivet head with a pin punch.
- Push out the rest of the rivet shank with a punch. If the shank will not push out, drill it; but be careful not to enlarge the hole in the material.

Self-Plugging(Mechanical-Lock) Rivets

Self-plugging (mechanical-lock) rivets are manufactured by Cherry Fasteners, Townsend Division of Textron Inc. They consist of three parts: a hollow shank, a stem, and a locking collar. Head styles of the shank are the same as those found in solid-shank rivets. The head also has a conical recess to accept the locking collar. The stem has an extruded angle and land to expand the sleeve for hole filling, a breakneck groove, a locking groove, and a head. Pull grooves on the protruding end of the stem fit the jaws of the rivet tool. The mechanical lock between the stem and sleeve gives these rivets approximately the same strength as common solid-shank rivets.

Mechanical-lock rivets may be substituted size for size (diameter) for solid aluminum 2117-T4 and 5056 rivets, and corrosion resistant steel and Monel rivets for most repair applications, such as skin repair, lightly stressed structural members, etc. For repairs other than these, engineering approval should be obtained.

Other types of self-plugging (mechanical-lock) rivets are available and in use on some Army aircraft. One of the most widely used mechanical-lock rivets is the CherryMAX.

Cherry fasteners (including Cherrylock and CherryMAX rivets) are widely used for blind riveting on Army aircraft. Special tools and procedures are required to use these rivets.

> NOTE: The following paragraphs describe Cherrylock and CherryMAX rivets and the tools and procedures needed to install and use them. The information and illustrations presented in these paragraphs are provided through the courtesy of Cherry Aerospace Fasteners, Cherry Division of Textron Inc., Santa Ana, CA.

BULBED CHERRYLOCK RIVETS

Bulbed Cherrylock rivets are locked, spindled, and flush-fracturing structural blind rivets (within the spindle and lock ring flushness limits of NAS 1740). The bulbed Cherrylock is a complete shear-fastening system. It provides optimum strength and performance in both thick and thin sheets. It also provides the highest design integrity, particularly in double-dimple or high-vibration areas. Cherrylocks are especially well suited for applications that require interchangeability with some solid rivets.

Bulbed Cherrylock rivets have the following design features:

- Large bulbed blind head—similar to a solid rivet; ensures higher tensile, shear, and fatigue strengths.
- Steel stem—high stem break load provides high preload and higher fatigue strength.
- High sheet clamp-up—provides increased fatigue strength.

Downloaded from http://www.everyspec.com

- Oversize shank—higher shear strength; lower head height for use in thin sheets; interchangeable with some solid rivets.
- Predictable hole fill—meets requirements of NAS 1740.
- Mechanical locked stem—ensures structural reliability in blind and nonblind applications; exceeds fatigue requirements of NAS 1740.
- Genuine flush-fracturing spindle—no shaving even in thin sheet, as with some other "flush break" rivets.
- Head marking—grip, materials, and manufacturer's identification for inspection when installed.
- Self-inspecting.

Refer to Figure 6-14 for a description of how the bulbed Cherrylock rivet works. Before pulling begins, the rivet appears as shown (A). As the stem is pulled into the rivet sleeve, a bulbed blind head starts to form. Clamp-up and hole-fill action begins (B). Clamp-up is completed as the stem continues to bulb-out the blind head (C). When a blind head and hole fillings are completely formed, the shear ring then begins to shear from the step cone to allow the stem to pull further into the rivet (D). Shear ring will have moved down the stem cone until pulling of the head automatically stops the stem break notch flush with the top of the rivet head. Locking collar is not yet ready to be inserted (E). Pulling the head has inserted the locking collar, and the stem has fractured flush with the rivet head. The bulbed Cherrylock rivet is completely installed (F).

Selection

Part Numbering

Refer to Figure 6-15 for a diagram of the part-numbering system for Cherrylock rivets.

Head Style

Bulbed Cherrylock rivets are available in several standard head styles (Figure 6-16):

- 100° countersunk head—used for countersunk applications.
- Universal head—used for protruding head applications.

Diameter

The bulbed Cherrylock is available in three commonly used diameters: -4 (0.140), -5 (0.173), and -6 (0.201) and in other sizes that are not often used. The bulbed Cherrylock rivet sleeve is 1/64 inch over the nominal size. In most cases, its increased bearing area and high-strength stem enable the bulbed Cherrylock to replace solid rivets. Its oversize sleeve is also ideal for repair or replacement of nominal blind or nonblind fasteners of all types.

NOTE: Standard drills are used to prepare installation holes.

Grip Length

Grip length (Figure 6-17) refers to the maximum total sheet thickness being riveted. This length is measured in decimal equivalents and identified by a second dash number. All Cherrylock rivets have their grip length (maximum grip) marked on the rivet head, and they have a variable grip range measured in decimals. For example, a -4 grip rivet has a grip range of 0.188 to 0.250 inch.

To determine which grip rivet to use, measure the material thickness with a 269C3 Cherry selector gage as shown in Figure 6-18. Always read to the next higher number. To find the rivet grip number, determine the total thickness of the material to be fastened and match it to the corresponding grip number in Table 6-14.

Material

Bulbed Cherrylock rivets are manufactured in a variety of materials to give the user the widest possible choice for optimum design. Each rivet was developed to provide bulbed Cherrylock performance in the range of shear strengths and temperatures shown in Table 6-15.

Strength and Weight

Table 6-16 shows minumum rivet shear and tensile strength (in pounds) in steel coupons for bulbed Cherrylock rivets. Table 6-17 shows installed weights.

Conversion

Table 6-18 shows bulbed Cherrylock rivet numbers converted to NAS numbers. Tables 6-19, 6-20, and 6-21 give detailed specifications for NAS 1738 bulbed Cherrylock rivets (universal-head). Tables 6-22, 6-23, and 6-24 give detailed specifications for NAS 1739 bulbed Cherrylock rivets (countersunk-head).

Downloaded from http://www.everyspec.com

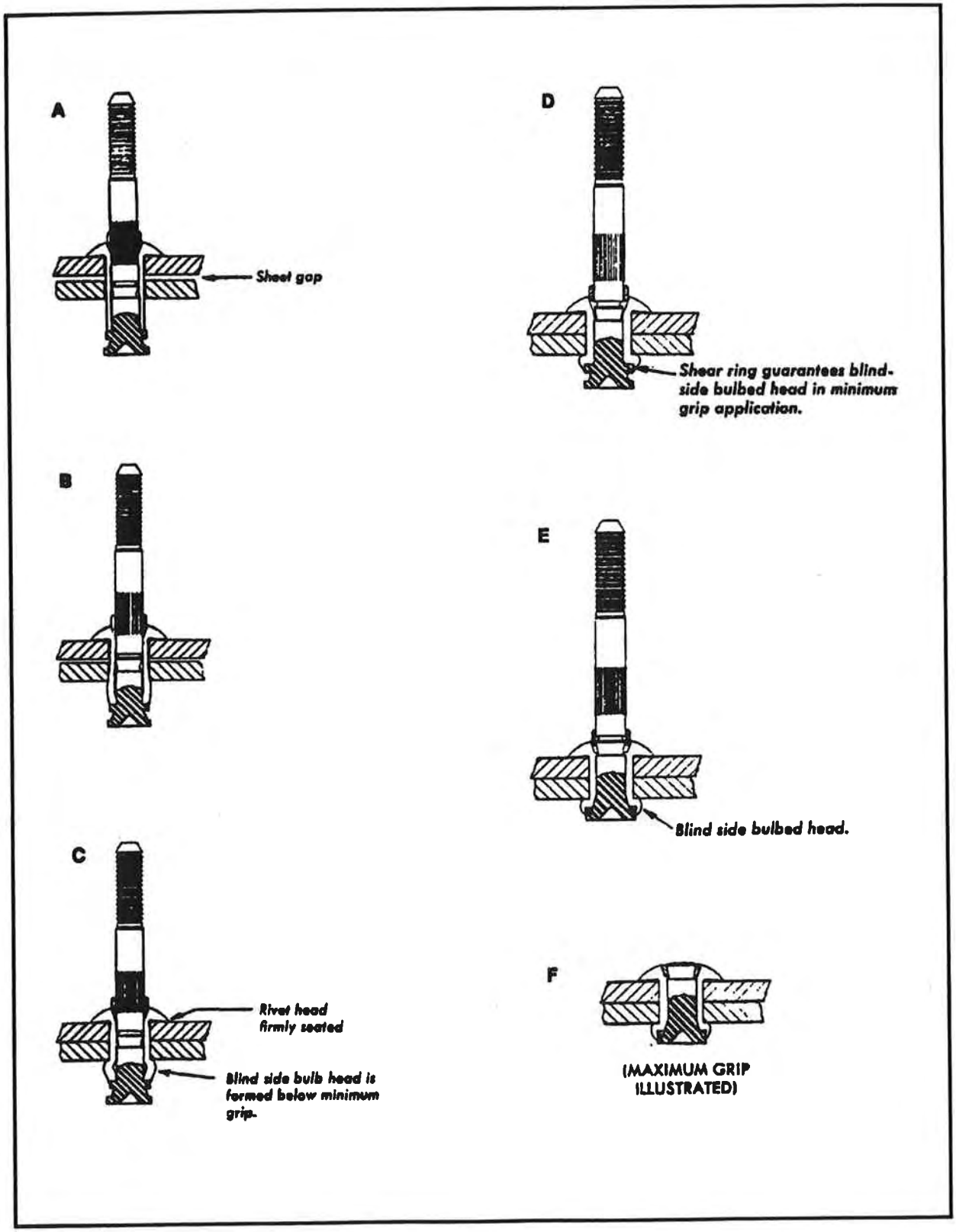

Figure 6-14. Bulbed Cherrylock rivet

Downloaded from http://www.everyspec.com

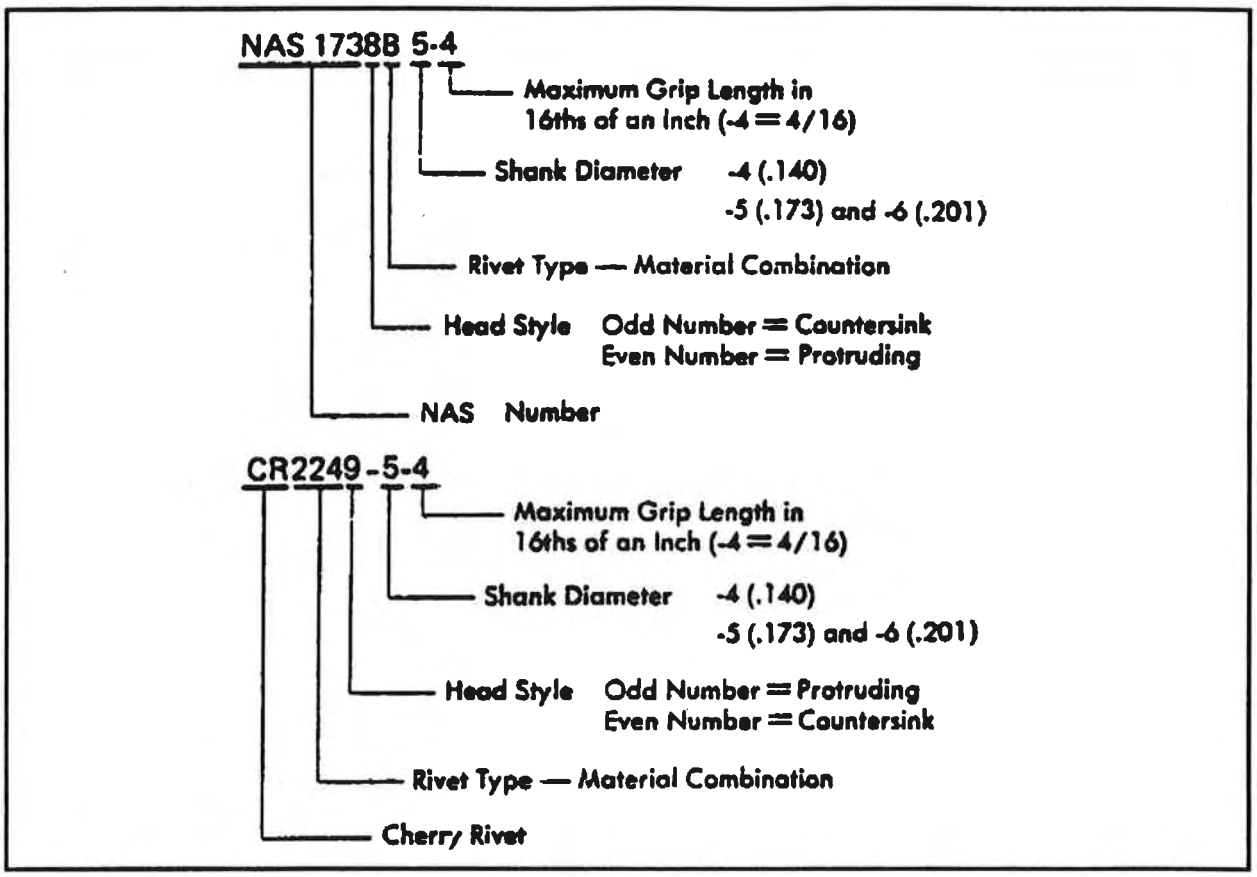

Figure 6-15. Part-numbering system (bulbed Cherrylock rivets)

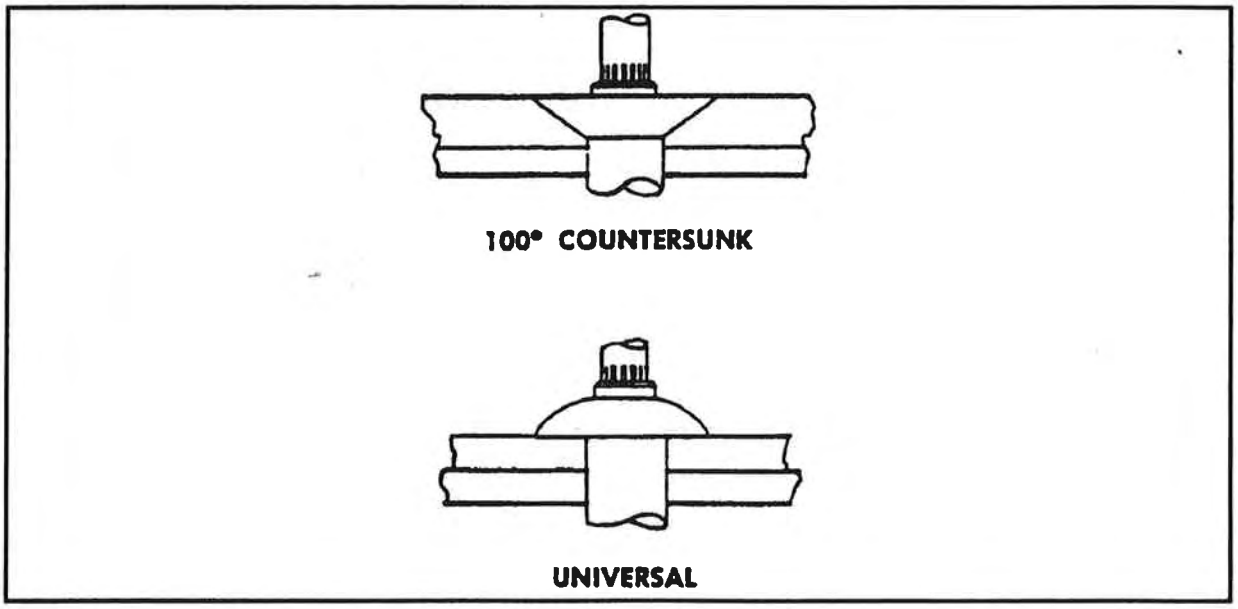

Figure 6-16. Head styles (bulbed Cherrylock rivets)

Downloaded from http://www.everyspec.com

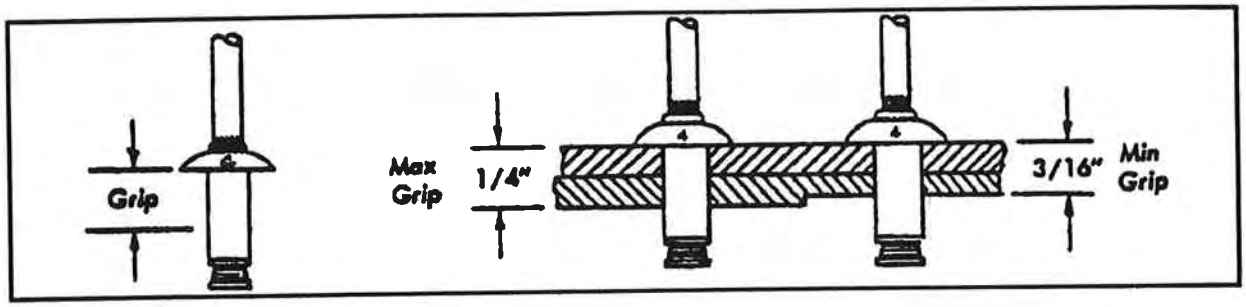

Figure 6-17. Grip length (bulbed Cherrylock rivets)

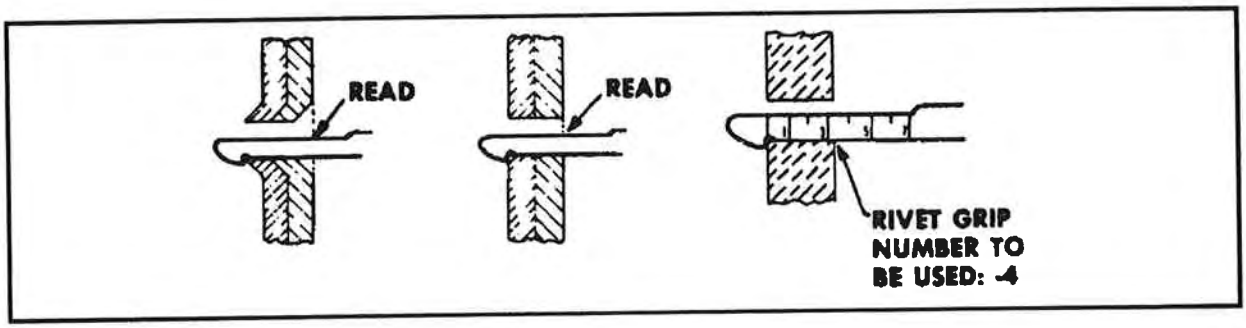

Figure 6-18. Cherry selector gage

Table 6-14. Material thickness chart

MATERIAL THICKNESS RANGE		RIVET GRIP NO
MINIMUM	MAXIMUM	
NONE	1/16"	1
1/16"	1/8"	2
1/8"	3/16"	3
3/16"	1/4"	4
1/4"	5/16"	5
5/16"	3/8"	6
3/8"	7/16"	7
7/16"	1/2"	8
1/2"	9/16"	9
9/16"	5/8"	10
5/8"	11/16"	11
11/16"	3/4"	12
3/4"	13/16"	13
13/16"	7/8"	14
7/8"	15/16"	15
15/16"	1"	16

Downloaded from http://www.everyspec.com

Table 6-15. Range of shear strengths and temperatures

RIVET SLEEVE MATERIAL	RIVET ULTIMATE SHEAR STRENGTH ROOM TEMPERATURE (psi)	TYPICAL MAXIMUM TEMPERATURE USE (°F)
5056	50,000	250
Monel	55,000	900
CRES Inco 600	75,000	1400

Table 6-16. Minimum rivet shear and tensile strength (pounds) in steel coupons

BULBED CHERRYLOCK RIVETS			SINGLE SHEAR PER NAS1740						TENSILE PER MIL-STD-1312 TEST 6		
			ALUMINUM		MONEL		CRES		ALUMINUM	MONEL	CRES
Rivet Dia & Grip		Sheet Thickness	2238 2248	2235 2239 2245 2249	2538 2540	2539 2545	2838 2840	2839 2845	2235 2238 2239 2245 2248 2249	2538 2539 2540 2545	2838 2839 2840 2845
—4	—2	2 x .062	480	592	570						
	—3	2 x .093	619	692	785	895	1008	1143	345	490	570
	—4	2 x .125	741	771	895	895	1194	1221			
	—5	2 x .156	814	814	895	895	1221	1221			
—5	—3	2 x .093	815	982	1010	1290	1373	1547			
	—4	2 x .125	977	1080	1270	1353	1607	1820			
	—5	2 x .156	1137	1177	1353	1353	1842	1845	530	740	860
	—6	2 x .187	1230	1230	1353	1353	1845	1845			
—6	—3	2 x .093	1005	1240	1210	1575	1720	1943			
	—4	2 x .125	1200	1386	1510	1823	1990	2251			
	—5	2 x .156	1388	1504	1823	1823	2260	2488	710	1000	1160
	—6	2 x .187	1579	1617	1823	1823	2488	2488			
	—7	2 x .219	1658	1658	1823	1823	2488	2488			

Downloaded from http://www.everyspec.com

Table 6-17. Installed weights

Bulbed Cherrylock Locked Spindle Rivets (Pounds per 1000 Pieces)

Dash Number	2235 2245	2238 2248	2239 2249	2538P 2538	2539P 2539	2540	2545	2838	2839	2840	2845
4-1	.74	.69	.88	1.09	1.41	1.50	1.30	1.10	1.50	1.60	1.39
4-2	.91	.87	1.06	1.38	1.70	1.79	1.59	1.39	1.79	1.89	1.68
4-3	1.09	1.05	1.24	1.67	1.99	2.08	1.88	1.68	2.08	2.18	1.97
4-4	1.27	1.23	1.42	1.96	2.28	2.37	2.16	1.97	2.37	2.47	2.25
4-5	1.44	1.41	1.60	2.25	2.57	2.66	2.45	2.26	2.66	2.76	2.54
4-6	–	1.59	1.78	2.54	2.86	2.95	–	2.55	2.95	3.05	–
4-7	–	1.77	1.96	2.83	3.15	3.24	–	2.84	3.24	3.34	–
4-8	–	1.95	2.14	3.12	3.44	3.53	–	3.13	3.53	3.63	–
4-9	–	2.13	2.32	3.41	3.73	3.82	–	3.42	3.82	3.92	–
5-1	1.24	–	1.48	–	2.46	–	2.43	–	2.70	–	2.67
5-2	1.52	1.46	1.76	2.38	2.91	3.60	2.86	2.40	3.13	3.50	3.08
5-3	1.81	1.74	2.04	2.83	3.36	4.05	3.30	2.83	3.56	3.93	3.50
5-4	2.08	2.02	2.32	3.28	3.81	4.50	3.73	3.26	3.99	4.35	3.91
5-5	2.35	2.30	2.60	3.73	4.26	4.95	4.17	3.69	4.42	4.79	4.53
5-6	2.63	2.58	2.88	4.18	4.71	5.40	4.62	4.12	4.85	5.22	4.76
5-7	–	2.86	3.16	4.63	5.16	5.85	–	4.55	5.28	5.65	–
5-8	–	3.14	3.44	5.08	5.61	6.30	–	4.98	5.71	6.08	–
5-9	–	3.42	3.72	5.53	6.06	6.75	–	5.41	6.14	6.51	–
5-10	–	3.70	4.00	5.98	6.51	7.20	–	5.84	6.57	6.94	–
5-11	–	3.98	4.28	6.43	6.96	7.65	–	6.27	7.00	7.37	–
6-1	2.00	–	2.47	–	3.97	–	4.18	–	4.30	–	4.51
6-2	2.38	2.47	2.85	3.97	4.59	5.90	4.78	3.70	4.89	5.60	5.08
6-3	2.77	2.85	3.24	4.59	5.21	6.52	5.39	4.29	5.48	6.19	5.66
6-4	3.15	3.24	3.62	5.21	5.83	7.14	6.00	4.88	6.07	6.78	6.24
6-5	3.53	3.62	4.01	5.83	6.45	7.76	6.60	5.47	6.66	7.37	6.81
6-6	3.90	4.01	4.39	6.45	7.07	8.38	7.20	6.06	7.25	7.95	7.38
6-7	4.29	4.39	4.78	7.07	7.69	9.00	7.80	6.65	7.84	8.55	7.95
6-8	4.68	4.78	5.16	7.69	8.31	9.62	8.41	7.24	8.43	9.14	8.53
6-9	–	5.17	5.54	8.31	8.93	10.24	–	7.83	9.02	9.73	–
6-10	–	5.55	5.93	8.93	9.55	10.86	–	8.42	9.61	10.32	–
6-11	–	5.94	6.31	9.55	10.17	11.48	–	9.01	10.20	10.91	–
6-12	–	6.32	6.70	10.17	10.79	12.10	–	9.60	10.79	11.50	–

Table 6-18. Conversion table (bulbed Cherrylock rivets)

HEAD STYLE	NAS NUMBER	CHERRY NUMBER	RIVET MATERIAL	STEM MATERIAL
UNIVERSAL HEAD	NAS 1738B	CR2249	5056 Aluminum	Alloy Steel, Cad. Plt'd.
	1738E	2239	5056 Aluminum	Inconel 600
	1738M	2539	Monel	Inconel 600
	1738MW	2539P	Monel, Cad. Plt'd.	Inconel 600
	1738C	2839	Inconel 600	A286 CRES
	1738CW	2839CW	Inconel 600, Cad. Plt'd.	A286 CRES
COUNTERSUNK HEAD (MS20426)	NAS 1739B	CR2248	5056 Aluminum	Alloy Steel, Cad. Plt'd.
	1739E	2238	5056 Aluminum	Inconel 600
	1739M	2538	Monel	Inconel 600
	1739MW	2538P	Monel, Cad. Plt'd.	Inconel 600
	1739C	2838	Inconel 600	A286 CRES
	1739CW	2838CW	Inconel 600, Cad. Plt'd.	A286 CRES

Downloaded from http://www.everyspec.com

Table 6-19. Dash number specifications (NAS 1738)

RIVET DIA	MIN GRIP (1)
1/8	.020
5/32	.025
3/16	.030

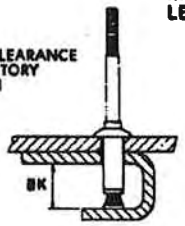

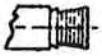

OPTIONAL CONFIGURATION FOR A286 AND INCONEL STEMS

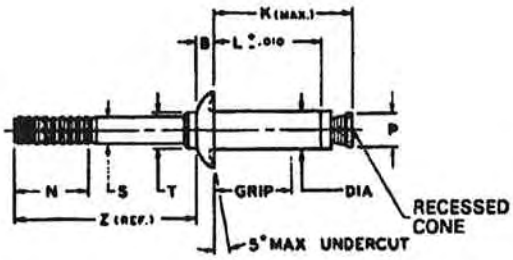

DIA DASH NO		-4	-5	-6
DIA +.003/-.001		.140	.173	.201
A ±.010		.250	.312	.375
B +.010/-.000		.054	.067	.080
N (MIN.)		.375	.375	.375
S +.006/-.003		.090	.112	.132
T (REF.)		.119	.148	.174
P (MAX.)		.143	.176	.205
BK	ALUMINUM	.30	.33	.37
	MONEL & INCONEL	.33	.37	.41
Z (REF)		1.65	1.63	1.65

Table 6-20. Rivet diameters (NAS 1738)

GRIP LIMITS 1/16" RANGE		RIVET GROUP	1/8 DIAMETER					5/32 DIAMETER					3/16 DIAMETER				
			DASH NO	ALUMINUM		MONEL & INCONEL		DASH NO	ALUMINUM		MONEL & INCONEL		DASH NO	ALUMINUM		MONEL & INCONEL	
MIN	MAX			L	K	L	K		L	K	L	K		L	K	L	K
(1)	.062	A	4-1	.183	.32	.203	.34	5-1	.205	.35	.236	.39	6-1	.233	.39	.264	.43
.063	.125		4-2	.242	.38	.265	.40	5-2	.265	.41	.298	.45	6-2	.293	.45	.326	.49
.126	.187		4-3	.306	.45	.328	.47	5-3	.329	.47	.360	.51	6-3	.357	.52	.389	.55
.188	.250		4-4	.370	.51	.390	.53	5-4	.393	.54	.423	.58	6-4	.421	.58	.452	.61
.251	.312		4-5	.434	.58	.453	.59	5-5	.457	.60	.485	.64	6-5	.485	.65	.514	.68
.313	.375		4-6	.498	.64	.515	.65	5-6	.521	.67	.548	.70	6-6	.549	.71	.577	.74
.376	.437		4-7	.562	.71	.578	.72	5-7	.585	.73	.610	.76	6-7	.613	.78	.639	.80
.438	.500		4-8	.626	.77	.640	.78	5-8	.649	.80	.673	.83	6-8	.677	.84	.702	.86
.501	.562		4-9	.690	.84	.703	.84	5-9	.713	.86	.735	.89	6-9	.741	.91	.764	.93
.563	.625							5-10	.777	.93	.798	.95	6-10	.805	.97	.827	.99
.626	.687							5-11	.841	.99	.860	1.01	6-11	.869	1.04	.889	1.05
.688	.750												6-12	.933	1.10	.952	1.11

RIVET GROUP REFERS TO SHIFT-POINT SETTING OF RIVETER.

Downloaded from http://www.everyspec.com

Table 6-21. Rivet numbers, material, and finish description (NAS 1738)

RIVET NUMBER	NAS 523 CODE	MATERIAL			FINISH		
		RIVET	STEM	LOCK RING	RIVET	STEM	LOCK RING
CR 2239 NAS 1738E	AAP	5056-F QQ-A-430	INCONEL 600 AMS 5665	MONEL QQ-N-281	MIL-A-8625 OR MIL-C-5541	NONE	NONE
CR 2249 NAS 1738B	AAO	5056-F QQ-A-430	8740 STEEL AMS 6322	MONEL QQ-N-281	MIL-A-8625 OR MIL-C-5541	CADMIUM PLATE QQ-P-416 TYPE II	NONE
CR 2539 NAS 1738M	AAR	MONEL QQ-N-281	INCONEL 600 AMS 5665	MONEL QQ-N-281	NONE	NONE	NONE
CR 2539P NAS 1738 MW	AAS	MONEL QQ-N-281	INCONEL 600 AMS 5665	MONEL QQ-N-281	CADMIUM PLATE QQ-P-416 TYPE II	NONE	NONE
CR 2639 NAS 1739C	ADB	INCONEL 600 AMS 5687	A-286 CRES AMS 5732	INCONEL 600 AMS 5687	NONE	NONE	NONE
CR 2639CW NAS 1739CW	—	INCONEL 600 AMS 5687	A-286 CRES AMS 5732	INCONEL 600 AMS 5687	CADMIUM PLATE QQ-P-416 TYPE II	NONE	NONE

DO NOT CLEAN OR DEGREASE PRIOR TO INSTALLATION. ALL OF THE RIVETS ABOVE MAY BE LUBRICATED IN ACCORDANCE WITH NAS 1740. LUBRICANT MUST NOT BE REMOVED!

Table 6-22. Dash number specifications (NAS 1739)

Table 6-21. DASH NUMBER SPECIFICATIONS

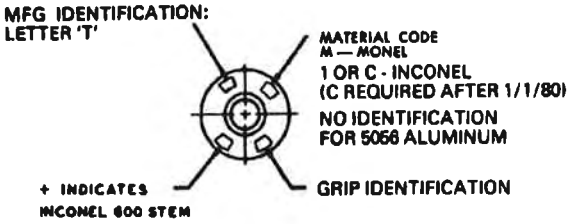

F F 100°±1½° FOR MONEL & INCONEL RIVETS

F HEAD DIAMETERS ARE TO THEORETICAL SHARP CORNERS AS MEASURED BY PROJECTION.

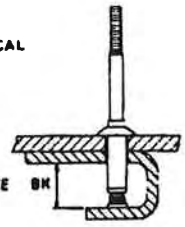

OPTIONAL CONFIGURATION
FOR A286 AND INCONEL STEMS

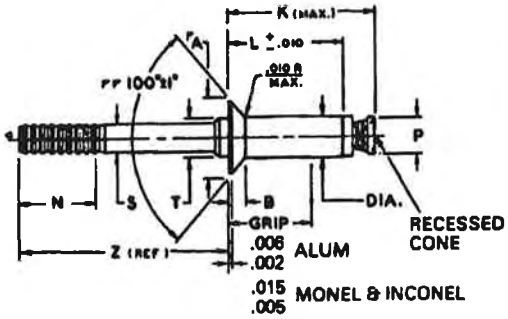

DIA DASH NO		-4	-5	-6
DIA +.003/-.001		.140	.173	.201
A ±.004		.225	.286	.353
B (REF)		.035	.047	.063
N (MIN)		.375	.375	.375
S +.006/-.003		.090	.112	.132
T (REF)		.119	.148	.174
P (MAX)		.143	.176	.205
BK	ALUMINUM	.30	.33	.37
	MONEL & INCONEL	.33	.37	.41
Z (REF)		1.42	1.57	1.59

Downloaded from http://www.everyspec.com

Table 6-23. Rivet diameters (NAS 1739)

GRIP LIMITS 1/16" RANGE		RIVET GROUP	1/8 DIAMETER					5/32 DIAMETER					3/16 DIAMETER				
			DASH NO	ALUMINUM		MONEL & INCONEL		DASH NO	ALUMINUM		MONEL & INCONEL		DASH NO	ALUMINUM		MONEL & INCONEL	
MIN.	MAX.			L	K	L	K		L	K	L	K		L	K	L	K
.045	.062		4-1	.220	.36	.203	.34										
.063▲	.125		4-2	.242	.38	.265	.40	5-2	.265	.41	.298	.45	6-2	.293	.45	.326	.49
.126	.187		4-3	.306	.45	.328	.47	5-3	.329	.47	.360	.51	6-3	.357	.52	.389	.55
.188	.250		4-4	.370	.51	.390	.53	5-4	.393	.54	.423	.58	6-4	.421	.58	.452	.61
.251	.312	A	4-5	.434	.58	.453	.59	5-5	.457	.60	.485	.64	6-5	.485	.65	.514	.68
.313	.375		4-6	.498	.64	.515	.65	5-6	.521	.67	.548	.70	6-6	.549	.71	.577	.74
.376	.437		4-7	.562	.71	.578	.72	5-7	.585	.73	.610	.76	6-7	.613	.78	.639	.80
.438	.500		4-8	.626	.77	.640	.78	5-8	.649	.80	.673	.83	6-8	.677	.84	.702	.86
.501	.562		4-9	.690	.84	.703	.84	5-9	.713	.86	.735	.89	6-9	.741	.91	.764	.93
.563	.625							5-10	.777	.93	.798	.95	6-10	.805	.97	.827	.99
.626	.687							5-11	.841	.99	.860	1.01	6-11	.869	1.04	.889	1.05
.688	.750												6-12	.933	1.10	.952	1.11

▲ MIN GRIP FOR -6-2 is .073.

RIVET GROUP REFERS TO SHIFT-POINT SETTING OF RIVETER.

Table 6-24. Rivet number, material, and finish description (NAS 1739)

RIVET NUMBER	NAS 523 CODE	MATERIAL			FINISH		
		RIVET	STEM	LOCK RING	RIVET	STEM	LOCK RING
CR 2238 NAS 1739E	AAV	5056-F QQ-A-430	INCONEL 600 AMS 5665	MONEL QQ-N-281	MIL-A-8625 OR MIL-C-5541	NONE	NONE
CR 2248 NAS 1739B	AAT	5056-F QQ-A-430	8740 STEEL AMS 6322	MONEL QQ-N-281	MIL-A-8625 OR MIL-C-5541	CADMIUM PLATE QQ-P-416 TYPE II	NONE
CR 2538 NAS 1739M	AAW	MONEL QQ-N-281	INCONEL 600 AMS 5665	MONEL QQ-N-281	NONE	NONE	NONE
CR 2638P NAS 1739MW	AAX	MONEL QQ-N-281	INCONEL 600 AMS 5665	MONEL QQ-N-281	CADMIUM PLATE QQ-P-416 TYPE II	NONE	NONE
CR 2838 NAS 1739C	ADJ	INCONEL 600 AMS 5687	A-286 CRES AMS 5732	INCONEL 600 AMS 5687	NONE	NONE	NONE
CR 2838CW NAS 1739CW	—	INCONEL 600 AMS 5687	A-286 CRES AMS 5732	INCONEL 600 AMS 5687	CADMIUM PLATE QQ-P-416 TYPE II	NONE	NONE

DO NOT CLEAN OR DEGREASE PRIOR TO INSTALLATION. ALL OF THE RIVETS ABOVE MAY BE LUBRICATED IN ACCORDANCE WITH NAS 1740. LUBRICANT MUST NOT BE REMOVED!

Downloaded from http://www.everyspec.com

NOTE: NAS 1740 procurement specification also applies to NAS 1738 and 1739 rivets.

NOTE: Bulbed Cherrylocks are designed to be used in both thick and thin sheets. Due to their large bulbed blind head (similar to a solid rivet), they are especially suited for double-dimple or high-vibration applications. Bulbed Cherrylocks can also be used to replace some solid rivets and in fiberglass or composites because the column collapses in a way that prevents crazing or cracking of parent material.

WIREDRAW CHERRYLOCK RIVETS

Wiredraw rivets are locked, spindle, and flush-fracturing structural rivets within the limits of NAS 1400. They come in a wide range of sizes, materials, and strength levels. These fasteners are well suited for sealing, especially in joints requiring excessive sheet take-up.

Wiredraw Cherrylock rivets have the following design features:

- Mechanically locked stem—ensures reliability; no lost stems.
- Wide grip range—exceeds 1/16-inch NAS requirements.
- Inspection of installed rivets—is according to TM 55-1500-204-25/1.
- Positive hole fill—increases joint strength.
- High sheet clamp-up—increases fatigue strength.
- Excellent head seating—ensures fewer rejections.
- Flush-fracturing spindle—requires no shaving.
- Head marking—includes grip, materials, and manufacturer's identification for ready inspection.

Refer to Figure 6-19 for a description of how wiredraw rivets work.

Before pulling begins, the rivet appears as shown (A). Pulling head pulls stem in and blind head forms against blind sheet (B). Blind head clamps sheets together (C). Stem begins to wiredraw and fill hole (D). Hole fill is completed and pulling head automatically stops stem with break notch flush with rivet head. Locking collar is now ready to be inserted (E). Pulling head has inserted locking collar and stem has fractured flush with rivet head. Installation is complete (F).

Selection

Material

Cherrylock rivets are manufactured in a variety of materials to give the user the widest possible choice for various situations. Each rivet was developed for a particular functional use, as shown in Table 6-25.

Strength

Table 6-26 gives minimum rivet shear and tensile strength for various materials in steel coupons.

Conversion

Table 6-27 shows NAS numbers converted to Cherry numbers for Cherrylock rivets.

Tables 6-28, 6-29, and 6-30 give detailed specifications for NAS 1398 universal-head rivets. Tables 6-31, 6-32, and 6-33 give detailed specification for NAS 1399 countersunk-head rivets.

NOTE: NAS 1400 procurement specification applies to NAS 1398 and 1399 rivets.

NOTE FOR USE IN LONG GRIP APPLICATIONS: Wiredraw Cherrylocks provide complete hole fill, which makes them especially well suited for applications requiring sealing capabilities. An additional advantage of wiredraw Cherrylocks is that they can be installed in stack-ups totaling 1/16 inch less than the stated minimum for a given grip. This in effect increases the total grip range to 1/8 inch rather than 1/16 inch. This is not recommended as a regular practice because it adds to the weight. However, it does not degrade joint integrity.

CHERRYLOCK AND BULBED CHERRYLOCK INSTALLATION

Install Cherrylock and bulbed Cherrylock rivets as follows:

- Prepare the hole. Refer to Table 6-34 for recommended drill sizes and countersunk diameter limits.

NOTE: Do not deburr the blind side of the hole.

Downloaded from http://www.everyspec.com

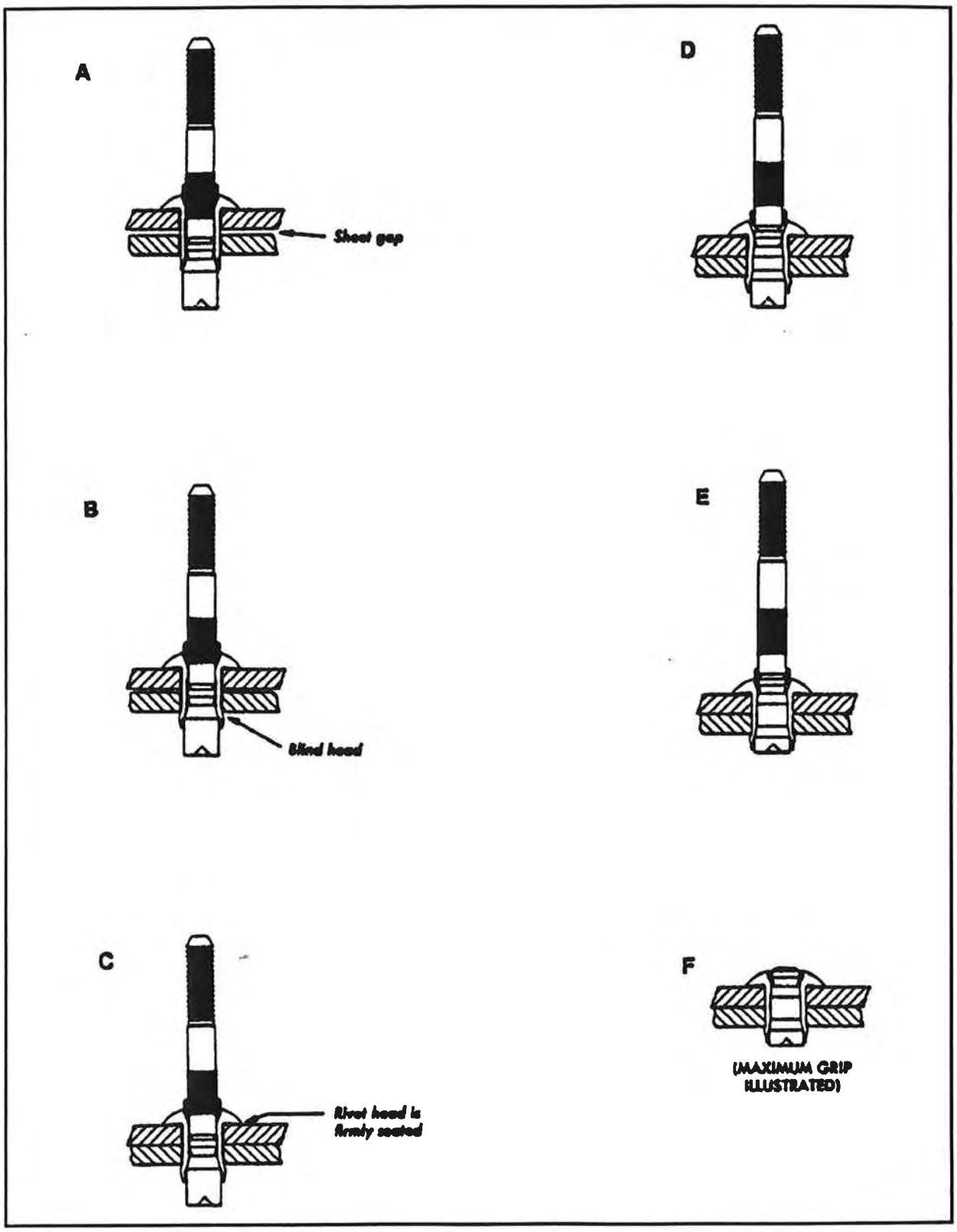

Figure 6-19. Wiredraw Cherrylock rivet

Downloaded from http://www.everyspec.com

Table 6-25. Materials used in wiredraw Cherrylock rivets

RIVET SLEEVE MATERIAL	RIVET ULTIMATE SHEAR STRENGTH (Room TEMPERATURE)	TYPICAL MAXIMUM TEMPERATURE USE °F
5056	30,000 psi	250
2017	38,000 psi	250
Monel	55,000 psi	900
A286 CRES (NAS1398/99 style)	75,000 psi	1200
A286 CRES *	95,000 psi	1200

*95KSI fastener for use in high bearing strength material, steel, CRES, Ti, etc.

Table 6-26. Minimum rivet shear and tensile strength (pounds) in steel coupons (wiredraw Cherrylock rivets)

WIREDRAW CHERRYLOCK RIVETS			SINGLE SHEAR PER NAS1400										TENSILE PER MIL-STD-1312 TEST 8		
			ALUMINUM				MONEL		CRES				ALU-MINUM	MONEL	CRES
Rivet Diam & Grip		Sheet Thick-ness	2162 2164	2163	2262	2263	2562 2564	2563	2642 *	2643 *	2652 2662 2664	2653 2663	2162 2163 2164 2262 2263	2562 2563 2564	2642 2643 2652 2653 2662 2663 2664
-3	-2	2 x .062									453(4)	543(4)			330(4)
	-3	2 x .093									543(4)	543(4)			
-4	-1	2 x .031		302		238		435		810		590	230	340	640
	-2	2 x .062	312	494	245	388	450	710	700	1215	610	970			
	-3	2 x .093	450	494	355	388	640	710	1230	1230	870	970			
	-4	2 x .125	494	494	388	388	710	710	1230	1230	970	970			
-5	-1	2 x .031		410		325		595		1115		810	375	550	1000
	-2	2 x .062		645		510		930		1620		1270			
	-3	2 x .093	620	755	490	596	860	1090	1450	1885	1230	1490			
	-4	2 x .125	710	755	550	596	1000	1090	1885	1885	1350	1490			
	-5	2 x .156	755	755	596	596	1090	1090	1885	1885	1490	1490			
-6	-2	2 x .062		810		640		1180		2085		1600	540	780	1500
	-3	2 x .093	710	1090	560	862	1030	1580	1550	2720	1400	2150			
	-4	2 x .125	930	1090	730	862	1310	1580	2385	2720	1800	2150			
	-5	2 x .156	1020	1090	820	862	1490	1580	2720	2720	2000	2150			
	-6	2 x .187	1090	1090	862	862	1580	1580	2720	2720	2150	2150			
-8	-2	2 x .062		1180		930		1700		3200		2330	1000	1450	2700
	-3	2 x .093		1580		1240		2280		4000		3120			
	-4	2 x .125	1250	1970	980	1550	1800	2840	2740	4830	2450	3890			
	-5	2 x .156	1610	1970	1280	1550	2300	2840	3870	4910	3200	3890			
	-6	2 x .187	1780	1970	1400	1550	2550	2840	4910	4910	3450	3890			
	-7	2 x .219	1920	1970	1520	1550	2800	2840	4910	4910	3700	3890			
	-8	2 x .250	1970	1970	1550	1550	2840	2840	4910	4910	3890	3890			

Downloaded from http://www.everyspec.com

Table 6-27. Conversion table (wiredraw Cherrylock rivets)

HEAD STYLE	NAS NUMBER	CHERRY NUMBER	RIVET MATERIAL	STEM MATERIAL
UNIVERSAL HEAD	NAS 1398B	CR2263	5056 Aluminum	7075 Aluminum
	–	2643 *	A286 CRES	A286 CRES, STA
	–	2653	A286 CRES	A286 CRES,Annealed Plug
	1398C	2663	A286 CRES	A286 CRES,Annealed Plug
	1398CW	2663CW	A286 CRES, Cad Plated.	A286 CRES,Annealed Plug
	1398D	2163	2017 Aluminum	7075 Aluminum
	1398M	2563M	Monel	Monel
	1398MS	2563S	Monel, Silver Plated	Monel
	1398MW	2563	Monel, Cad Plated	Monel
COUNTERSUNK HEAD (MS20426)	NAS 1399B	CR2262	5056 Aluminum	7075 Aluminum
	–	2642 *	A286 CRES	A286 CRES, STA
	–	2652	A286 CRES	A286 CRES,Annealed Plug
	1399C	2662	A286 CRES	A286 CRES,Annealed Plug
	1399CW	2662CW	A286 CRES, Cad Plated	A286 CRES,Annealed Plug
	1399D	2162	2017 Aluminum	7075 Aluminum
	1399M	2562M	Monel	Monel
	1399MS	2562S	Monel, Silver Plated	Monel
	1399MW	2562	Monel, Cad Plated	Monel

* 95KSI fastener for use in high bearing strength material, steel, CRES, Ti, etc.

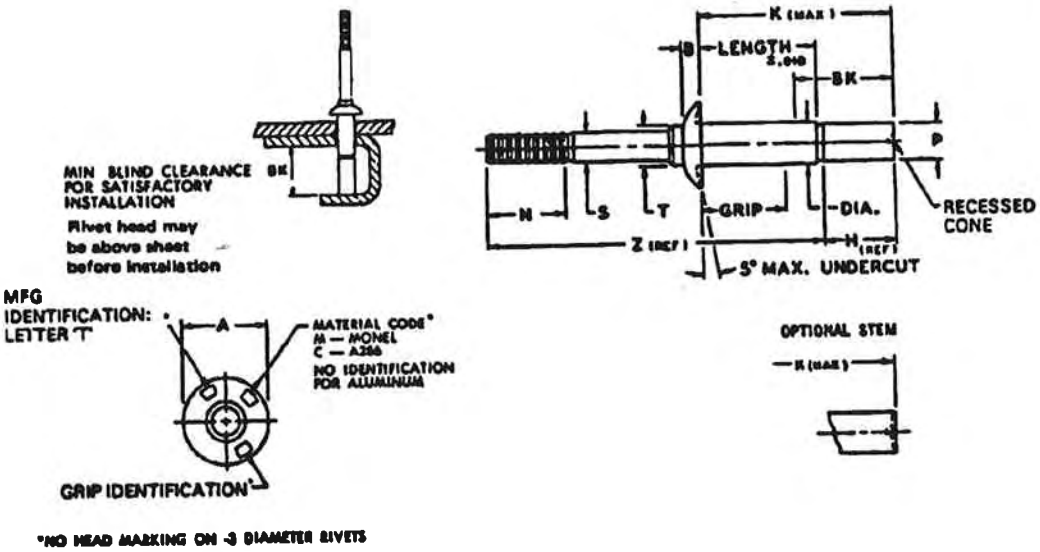

*NO HEAD MARKING ON -3 DIAMETER RIVETS

Downloaded from http://www.everyspec.com

Table 6-28. Dash number specifications (NAS 1398)

DIA DASH NO		-3(2)	-4	-5	-6	-8
DIA +.003/-.001		.094	.125	.156	.187	.250
A		.187±.009	.250±.012	.312±.016	.375±.019	.500±.025
B +.010/-.000		.040	.054	.067	.080	.107
N (MIN)		.375	.375	.375	.375	.375
S ±.003		.069	.090	.112	.132	.178
T (REF)		.089	.119	.148	.174	.232
P ±.007		.090±.004	.111	.139	.164	.219
Z (REF)	A GROUP	1.78	1.79	1.81	1.85	1.97
	B GROUP			2.06	2.10	2.22
	C GROUP					2.47

Table 6-29. Rivet diameters (NAS 1398)

RIVET DIAMETERS (NAS 1398)

GRIP LIMITS 1/16" RANGE		RIVET GROUP	3/32 DIAMETER(2)					1/8 DIAMETER					5/32 DIAMETER					3/16 DIAMETER					1/4 DIAMETER				
MIN	MAX		DASH No	LGTH	N	K	BK	DASH No	LGTH	N	K	BK	DASH No	LGTH	N	K	BK	DASH No	LGTH	N	K	BK	DASH No	LGTH	N	K	BK
(1)	.062	A	3-1	.156	.131	.33	.22	4-1	.188	.147	.39	.30	5-1	.188	.127	.38	.28	6-1	.188	.107	.37	.27					
.063	.125		3-2	.219	.172	.43	.26	4-2	.250	.203	.51	.35	5-2	.250	.183	49	34	6-2	.250	.163	.48	.32	8-2	.313	.179	.57	.37
.126	.187		3-3	.281	.211	.53	.30	4-3	.313	.259	.63	.41	5-3	.313	.239	.61	39	6-3	.313	.219	.60	.37	8-3	.375	.235	.69	.43
.188	.250		3-4	.344	.254	.63	.34	4-4	.375	.315	.75	.46	5-4	.375	.295	.73	45	6-4	.375	.275	.72	.43	8-4	.438	.291	.81	.48
.251	.312							4-5	.438	.371	.87	.52	5-5	.438	.351	85	.50	6-5	.438	.331	.84	.48	8-5	.500	.347	.93	.54
.313	.375							4-6	.500	.427	.98	.57	5-6	.500	.407	.97	56	6-6	.500	.387	.96	.54	8-6	.563	.403	1.04	.60
.376	.437							4-7(3)	.563	.493	1.11	.63	5-7	.563	.463	1.09	.62	6-7	.563	.443	1.08	.60	8-7	.625	.459	1.16	.65
.438	.500							4-8(3)	.625	.549	1.23	.69	5-8	.625	.519	1.20	.67	6-8	.625	.499	1.20	.65	8-8	.688	.515	1.28	.71
.501	.562	B											5-9(4)	.688	.628	1.37	78	6-9	.688	.610	1.37	.76	8-9	.750	.630	1.46	.82
.563	.625												5-10(4)	.750	.686	1.54	.84	6-10	.750	.670	1.49	.82	8-10	.813	.690	1.58	.88
.626	.687																	6-11	.813	.730	1.61	.88	8-11	.875	750	1.70	.94
.688	.750																	6-12	.875	.790	1.74	.94	8-12	.938	.810	1.83	1.00
.751	.812	C																					8-13	1.000	870	1.95	1.06
.813	.875																						8-14	1.063	.930	2.07	1.12

(1)

RIVET DIA	MIN GRIP
3/32	.020
1/8	.025
5/32	.031
3/16	.037

NOTES:

(2) 3/32" diameter available in A-286 only. Not covered by NAS1398
(3) Not covered by NAS1398
(4) Only covered by NAS1398 for A-286 and Monel

RIVET GROUP REFERS TO SHIFT-POINT SETTING OF RIVETER.

Downloaded from http://www.everyspec.com

Table 6-30. Universal-head rivets (rivet number, material, and finish) (NAS 1398)

RIVET NUMBER	NAS 523 CODE	MATERIAL			FINISH		
		RIVET	STEM	LOCK RING	RIVET	STEM	LOCK RING
CR 2163 NAS 1398D	RL	2017-T4 QQ-A-430	7075 QQ-A-430	5056-H38 QQ-A-430	YELLOW COLOR MIL-A-8625 OR MIL-C-5541	MIL-C-5541	NONE(8)
CR 2263 NAS 1398B	RK	5056-F QQ-A-430	7075 QQ-A-430	5056-H38 QQ-A-430	ORANGE COLOR MIL-A-8625	MIL-C-5541	NONE(5)
CR 2663 NAS 1398MW	TK	MONEL QQ-N-281	MONEL QQ-N-281	MONEL QQ-N-281	CADMIUM PLATE QQ-P-416 TYPE II	NONE	NONE
CR 2663M NAS 1398M	RM	MONEL QQ-N-281	MONEL QQ-N-281	MONEL QQ-N-281	NONE	NONE	NONE
CR 2663S NAS 1398MS	TL	MONEL QQ-N-281	MONEL QQ-N-281	MONEL QQ-N-281	SILVER PLATE CHERRY SPEC. C-32	NONE	NONE
CR 2643 (7)(8)	RH	A-286 CRES AMS5732	A-286 CRES AMS5732	MONEL QQ-N-281	DRY FILM COAT CHERRY SPEC. C-30	COPPER COAT (FOR IDENTIFICATION ONLY)	NONE
CR 2653 (7)	ACY	A-286 CRES AMS5732	A-286 CRES AMS5732 (8)	INCONEL 600 AMS 5687	DRY FILM COAT CHERRY SPEC. C-30	NONE	NONE
CR 2663 NAS 1398C	RN	A-286 CRES AMS5732	A-286 CRES AMS5732 (8)	MONEL QQ-N-281	DRY FILM COAT CHERRY SPEC. C-30	NONE	NONE
CR 2663CW NAS 1398CW	TM	A-286 CRES AMS5732	A-286 CRES AMS5732 (8)	MONEL QQ-N-281	CADMIUM PLATE QQ-P-416 TYPE II	NONE	NONE

NOTES: (5) May have beige color to identify 5056 material.
(6) "P" diameter annealed.
(7) Not covered by NAS Standard. Quoted on request.
(8) 95KSI fastener for use in high bearing strength materials; steel, CRES, Ti, etc.

DO NOT CLEAN OR DEGREASE PRIOR TO INSTALLATION. ALL OF THE RIVETS ABOVE MAY BE LUBRICATED IN ACCORDANCE WITH NAS1400. LUBRICANT MUST NOT BE REMOVED!

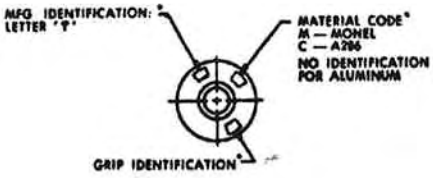

*NO HEAD MARKING ON -3 DIAMETER RIVETS

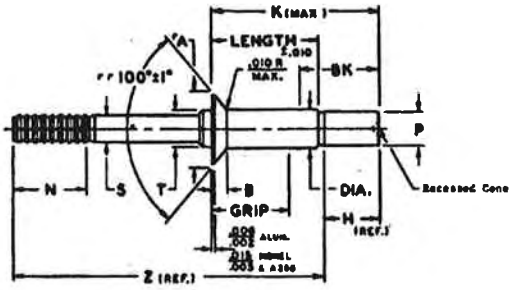

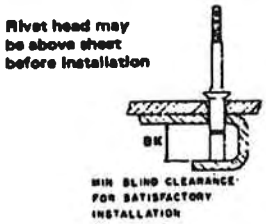

r HEAD DIAMETERS ARE TO THEORETICAL SHARP CORNERS AS MEASURED BY PROJECTION.

r r 100° ±1½° FOR MONEL & CRES RIVETS.

OPTIONAL STEM

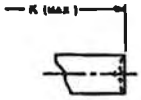

Downloaded from http://www.everyspec.com

Table 6-31. Dash-number specifications (NAS 1399)

DIA DASH NO		-3(2)	-4	-5	-6	-8
DIA +.003/-.001		.094	.125	.156	.187	.250
MS 20426 HEAD A ±.004		.179	.225	.286	.353	.476
B (REF)		.036	.042	.055	.070	.095
N (MIN)		.375	.375	.375	.375	.375
S ±.003		.069	.090	.112	.132	.178
T (REF)		.089	.119	.148	.174	.232
P⁻±.007		.090	.111	.139	.164	.219
Z (REF)	A GROUP	1.78	1.79	1.81	1.85	1.97
	B GROUP			2.06	2.10	2.22
	C GROUP				2.35	2.47

Table 6-32. Rivet diameters (NAS 1399)

GRIP LIMITS 1/16" RANGE		RIVET GROUP	3/32 DIAMETER(2)				1/8 DIAMETER					5/32 DIAMETER					3/16 DIAMETER					1/4 DIAMETER				
MIN	MAX		DASH No	LGTH	N	K	BK	DASH No	LGTH	N	K	BK	DASH No	LGTH	N	K	BK	DASH No	LGTH	N	K	BK	DASH No	LGTH	N	K	BK
(1)	.125	A	3-2	.219	.131	.39	.22	4-2	.250	.147	.45	.30	5-2	.250	.127	.44	.28	6-2	.250	.107	.44	.26					
.126	.187		3-3	.281	.172	.49	.28	4-3	.313	.203	.57	35	5-3	.313	.183	.56	34	6-3	.313	.163	55	.32	8-3	.375	.179	.63	37
.188	.250		3-4	.344	.211	.59	.30	4-4	375	259	69	.41	5-4	.375	.239	.67	.39	6-4	.375	.219	.67	.37	8-4	.438	.235	.75	.43
.251	.312							4-5	.438	.315	.81	.46	5-5	.438	.295	79	.45	6-5	.438	.275	.78	.43	8-5	.500	.291	.87	.48
.313	.375							4-6	.500	.371	93	.52	5-6	.500	.351	91	.50	6-6	.500	.331	.90	48	8-6	.563	.347	99	.54
.376	.437							4-7(3)	.563	.437	1.05	.57	5-7	.563	.407	1.03	.56	6-7	.563	.387	1.02	.54	8-7	.625	.403	1.11	.60
.438	.500							4-8(3)	.625	.493	1.17	.63	5-8	.625	.463	1.15	.62	6-8	.625	.443	1.14	.60	8-8	.688	.459	1.23	.65
.501	.562												5-9(3)	.688	.519	1.27	67	6-9	.688	.499	1.26	.65	8-9	.750	.515	1.34	71
.563	.625	B											5-10(4)	.750	.626	1.44	.78	6-10	.750	.610	1.43	.76	8-10	.813	.630	1.52	.82
.626	.687																	6-11	.813	.670	1.55	.82	8-11	.875	.690	1.64	.88
.688	.750																	6-12	.875	.730	1.67	.88	8-12	.938	.750	1.77	.94
.751	.812																	6-13(3)	.938	.790	1.79	.94	8-13	1.000	.810	1.89	1.00
.813	.875	C																6-14(3)	1.000	.850	1.91	1.00	8-14	1.063	.870	2.01	1.06

(1)

RIVET DIA	MIN GRIP
3/32	.063
1/8	.063
5/32	.075
3/16	.090

NOTES:

(2) 3/32" diameter available in A-286 only. Not covered by NAS1399
(3) Not covered by NAS1399
(4) Only covered by NAS1399 for A-286 and Monel

RIVET GROUP REFERS TO SHIFT-POINT SETTING OF RIVETER.

Downloaded from http://www.everyspec.com

Table 6-33. Head style (rivet number, material, and finish) (NAS 1399)

RIVET NUMBER	NAS 523 CODE	MATERIAL			FINISH		
		RIVET	STEM	LOCK RING	RIVET	STEM	LOCK RING
CR 2162 NAS 1399D	RP	2017-T4 QQ-A-430	7075 QQ-A-430	5056-H38 QQ-A-430	YELLOW COLOR MIL-A-8625 OR MIL-C-5541	MIL-C-5541	NONE(5)
CR 2262 NAS 1399B	RO	5056-F QQ-A-430	7075 QQ-A-430	5056-H38 QQ-A-430	ORANGE COLOR MIL-A-8625	MIL-C-5541	NONE(5)
CR 2562 NAS 1399MW	TO	MONEL QQ-N-281	MONEL QQ-N-281	MONEL QQ-N-281	CADMIUM PLATE QQ-P-416 TYPE II	NONE	NONE
CR 2562M NAS 1399M	RR	MONEL QQ-N-281	MONEL QQ-N-281	MONEL QQ-N-281	NONE	NONE	NONE
CR 2562S NAS 1399MS	TP	MONEL QQ-N-281	MONEL QQ-N-281	MONEL QQ-N-281	SILVER PLATE CHERRY SPEC. C-22	NONE	NONE
CR 2642 (7)(8)	RJ	A-286 CRES AMS5732	A-286 CRES AMS5732	MONEL QQ-N-281	DRY FILM COAT CHERRY SPEC. C-30	COPPER COAT (FOR IDENTIFICATION ONLY)	NONE
CR 2652 (7)	—	A-286 CRES AMS5732	A-286 CRES AMS5732 (6)	INCONEL 600 AMS 5687	DRY FILM COAT CHERRY SPEC. C-30	NONE	NONE
CR-2662 NAS 1399C	RS	A-286 CRES AMS5732	A-286 CRES AMS5732 (6)	MONEL QQ-N-281	DRY FILM COAT CHERRY SPEC. C-30	NONE	NONE
CR 2662CW NAS 1399CW	TR	A-286 CRES AMS5732	A-286 CRES AMS5732 (6)	MONEL QQ-N-281	CADMIUM PLATE QQ-P-416 TYPE II	NONE	NONE

NOTES: (5) May have beige color to identify 5056 material.
(6) "P" diameter annealed.
(7) Not covered by NAS Standard. Quoted on request.
(8) 95KSI fastener for use in high bearing strength materials; steel, CRES, Ti, etc.
DO NOT CLEAN OR DEGREASE PRIOR TO INSTALLATION. ALL OF THE RIVETS ABOVE MAY BE LUBRICATED IN ACCORDANCE WITH NAS1400. LUBRICANT MUST NOT BE REMOVED!

Table 6-34. Recommended drill sizes and diameter limits

CHERRYLOCK			
Rivet Dia	Drill Size	Minimum	Maximum
3/32	#40	.097	.100
1/8	#30	.129	.132
5/32	#20	.160	.164
3/16	#10	.192	.196
1/4	F	.256	.261
BULBED CHERRYLOCK			
1/8	#27	.143	.146
5/32	#16	.176	.180
3/16	#5	.205	.209

COUNTERSINKING DIMENSIONS

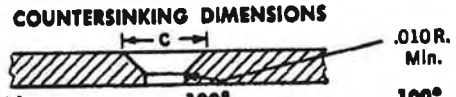

	100° M520426 HEAD		100° NAS1097 HEAD		100° UNISINK HEAD	
Rivet Dia	C Max	C Min	C Max	C Min	C Max	C Min
3/32	.182	.176	—	—	—	—
1/8	.228	.222	.195	.189	.173	.167
5/32	.289	.283	.246	.240	.216	.210
3/16	.356	.350	.302	.296	.258	.252
1/4	.479	.473	.395	.389	—	—

Downloaded from http://www.everyspec.com

- Place the rivet in the hole. Refer to Figure 6-20. Select the proper pulling head to conform to the diameter and head style of the Cherrylock rivet being installed.The rivet is now ready to be placed in the hole. The holes in the sheets to be fastened must be of the correct size and aligned properly. Do not force the rivet into the hole (A). In limited blind clearance applications, the manufactured head of the standard Cherrylock can protrude above the top sheet and will pull down to the sheet as the stem is pulled in. The minimum blind clearance equals the "BK" dimension (B).
- Place the pulling head on the rivet stem. Hold the riveter and pulling head in line with the axis of the rivet. Hold the riveter in a light and flexible manner (C).
- Install the rivet when the riveter is actuated. The pulling head will pull down and seat against the rivet head. The rivet clamping action will pull the sheets, together and seat the rivet head. Pressing down forcefully will not allow the rivet and the riveter to align themselves with the hole; this can limit the head seating action of the rivet. Hold the riveter in line with the rivet as accurately as possible and apply steady but light pressure, pull the trigger and LET THE RIVET DO THE WORK (D).
- Release the trigger when the rivet is completely installed. The pulling head will automatically eject the pulling portion of the stem through the front end. Controlled stem release into the receptacle will control foreign object damage (FOD) problems (E).

CHERRYLOCK INSPECTION

Inspect Cherrylocks according to Chapter 4 of TM 55-1500-204-25/1 (Figure 6-21 [A]). A slight collar "flash" caused by the pressures needed to drive the collar is acceptable within the limit shown (B). Cherrylock rivets have the grip length marked on the rivet head (except for the 3/32-inch-diameter size), so that they can be inspected from the visible side to find out whether the rivets have been installed with the correct grip. Superficial stretch marks that may appear in the rivet sleeve do not reduce rivet strength and are acceptable (C).

TROUBLESHOOTING (CHERRYLOCK)

When problems occur with rivets, the source of the trouble could be the person installing them, the tools, or the installation. The following troubleshooting guide (Figure 6-22) applies to both bulbed and Cherrylock rivets:

- Rivet stem pulls through or breaks high (A). Rivet stem break notch pulls to 0.030 inch or higher above rivet head. Stem may or may not break:
  - Pulling head shifts too late – readjust pulling head to shift sooner.
  - Rivet installed in oversize hole – use rivet with larger diameter or drill smaller holes.
  - Rivet installed in under minimum grip – use shorter grip rivet.
- Rivet stem breaks low (collar does not set) (B). Rivet stem breaks well below rivet head and collar does not set:
  - Rivet installed in undersize hole – drill out holes to proper size.
  - Rivet installed in over maximum grip – use longer grip rivet.
  - Holes slanted or misaligned – take more care to obtain holes that are properly aligned and normal to the sheets.
  - Installer "cocks" pulling head – take more care to align tool; keep arm flexible to allow rivet to align itself.
- Rivet stem breaks low (collar does set) (C). Rivet stem breaks below rivet head, but collar is set:
  - Pulling head shifts too soon – readjust pulling head to shift later.
  - Wrong type head – only Cherry tools will install Cherrylock rivets. Do not use other manufacturer's tooling.
- Locking collar does not set (D). Rivet stem breaks near flush, but collar does not set:
  - Rivet installed in over maximum grip – use rivet with longer grip.
  - Chips prevent anvil from setting collar; chips, burrs, and dry sealant build up on head anvil and restrict forward thrust needed to set collar – clean thoroughly and readjust.

Downloaded from http://www.everyspec.com

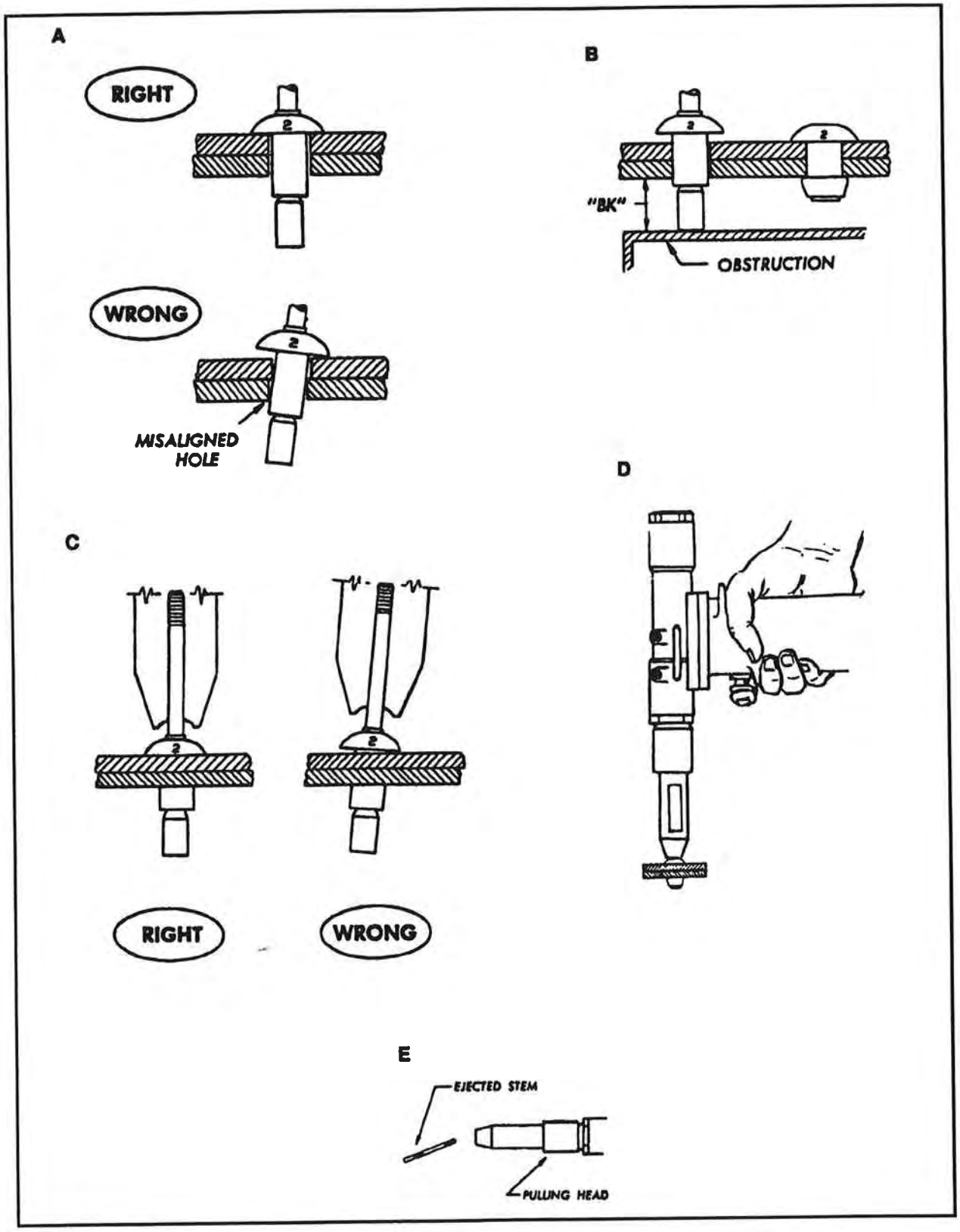

Figure 6-20. Rivet installation

Downloaded from http://www.everyspec.com

A

COLLAR PROTRUSION LIMITS
WITHIN NAS1400 AND 1740

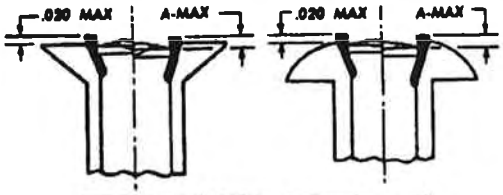

RIVET SIZE	-4 DIA.	-5 DIA.	-6 DIA.	-8 DIA.
A MAX	.015	.020	.025	.030

B

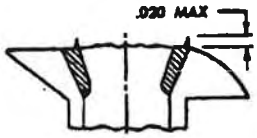

STEM PROTRUSION LIMITS
WITHIN NAS1400 AND 1740

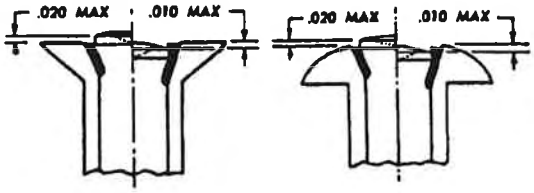

INSPECT INSTALLED RIVET FLUSHNESS TO
BREAK-OFF LIMITS OF NAS 1400 AND NAS 1740

C

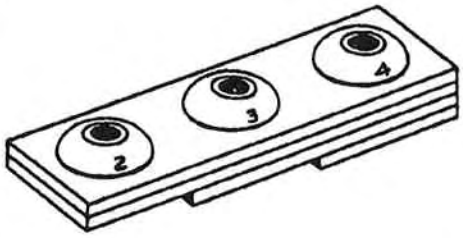

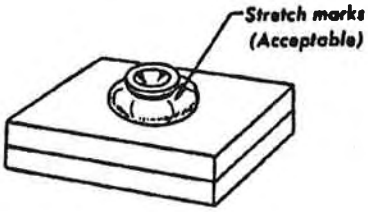

BULBED BLIND HEAD

Figure 6-21. Cherrylock inspection

Downloaded from http://www.everyspec.com

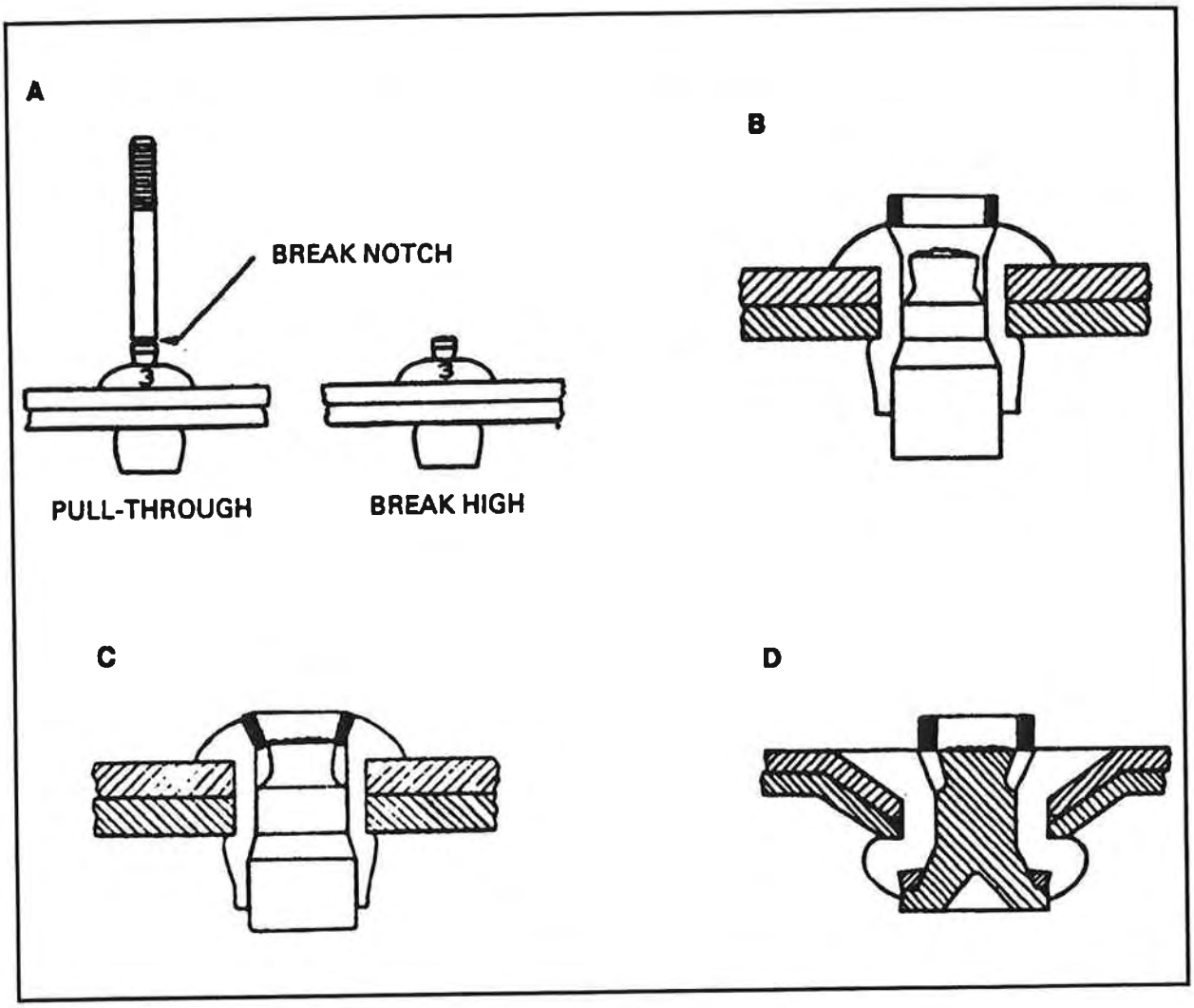

Figure 6-22. Troubleshooting Cherrylock rivets

- Pulling head shifts too late—readjust pulling head to shift sooner.

- Rivet head does not seat properly (E). Rivet head does not seat properly against top sheet or in countersink:
  - Holes slanted or misaligned—take more care to obtain holes that are properly aligned and normal to the sheets.
  - Countersink not aligned with hole—use countersink pilot that is close to hole size.
  - Installer "cocks" pulling head and rivet head during installation—installer should hold gun and pulling head in a flexible manner so that rivet can clamp head down properly.
  - Lock ring anvil protrudes too far—replace with correctly fitted anvil. Anvil must be flush within specified limits.

RIVET REMOVAL (CHERRYLOCK)

If it is necessary to remove an installed Cherrylock rivet, use the following procedures (Figure 6-23):

- In thick material remove the lock by driving out the rivet stem when practical (A).
- If the rivets have been installed in thin sheets, driving out the locked stem may damage the sheets. It is recommended that a small center drill be used to provide a guide for a larger drill on top of the rivet stem and that the tapered portion of the stem be drilled away to destroy the lock (B).

Downloaded from http://www.everyspec.com

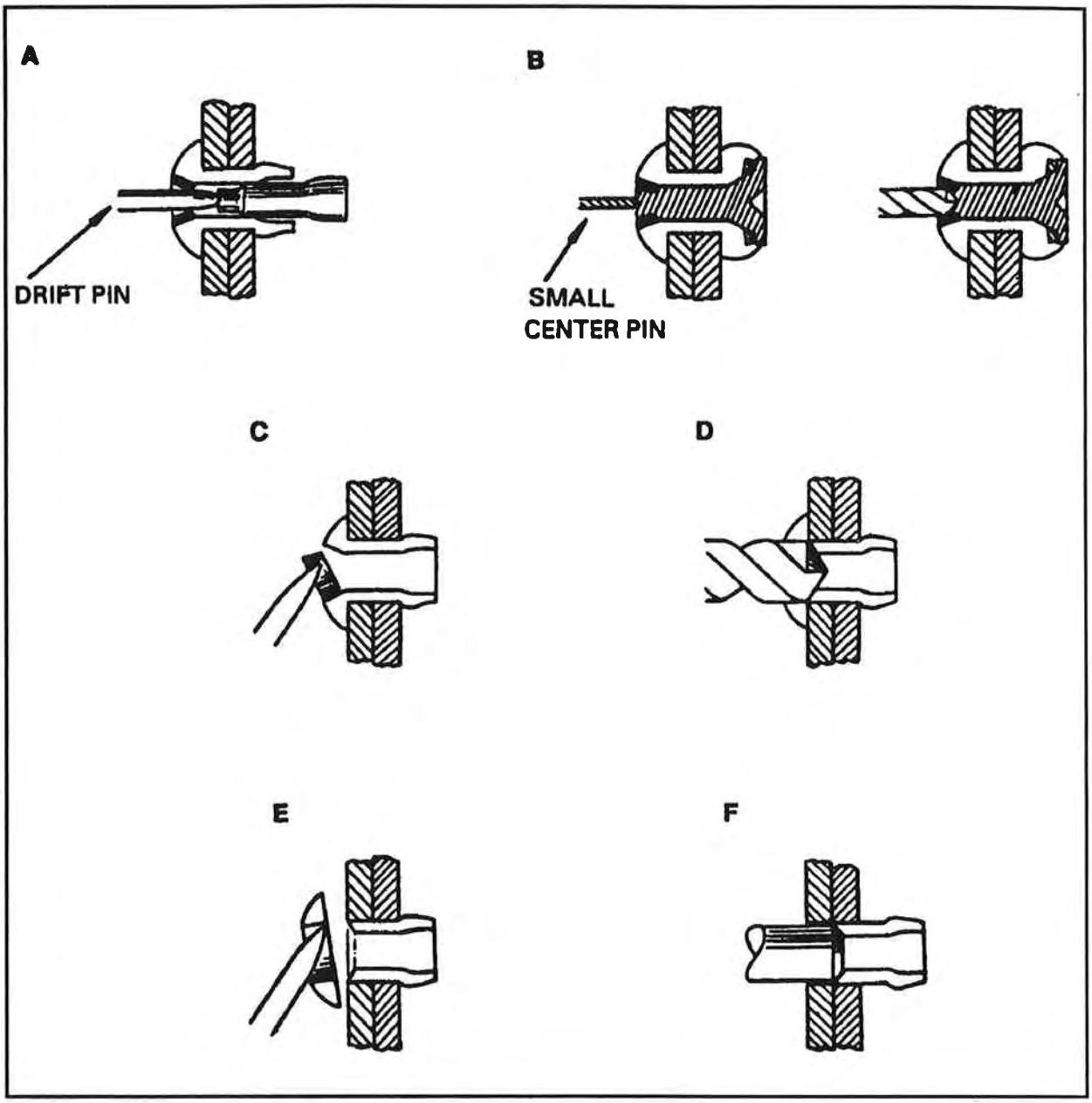

Figure 6-23. Rivet removel

- Pry the remainder of the locking collar out of the rivet head with the drift pin (C).
- Drill nearly through the head of the rivet, using a drill the same size as the rivet shank (D).
- Break off the rivet head, using a drift pin as a pry (E)
- Drive out the remaining rivet shank with a pin having a diameter equal to the rivet shank (F)

> **CAUTION**
>
> **DO NOT drill completely through the rivet sleeve to remove a rivet because this will tend to enlarge the hole.**

TOOL SELECTION (CHERRYLOCK)

Table 6-35 shows pulling heads used with different sizes of Cherrylock rivets.

Downloaded from http://www.everyspec.com

Table 6-35. Cherrylock tool selection chart

TYPE OF TOOL	CHERRY RIVETER MODEL	BULBED CHERRYLOCKS (SEE 1700 & 1700)						STANDARD (WIREDRAW) CHERRYLOCKS (SEE 1800 & 1800)							
		PULLING HEAD	RIVET DIA	ALUMINUM		MONEL & INCONEL		PULLING HEAD	RIVET DIA (3)	ALUMINUM		MONEL		CRES, INCONEL	
				2238 2239 2245 2249	2238 2248	2539 2545 2639 2645	2538 2540 2638 2640			2163 2263	2162 2164 2262 2264	2563	2562 2564	2643 2653 2663	2642 2652 2662 2664
				UNIV HEAD	CTSK HEAD	UNIV HEAD	CTSK HEAD			UNIV HEAD	CTSK HEAD	UNIV HEAD	CTSK HEAD	UNIV HEAD	CTSK HEAD
HAND	G-36	H616	-4	ALL	ALL	–	–	H616	-4	ALL	ALL	ALL	ALL	ALL	ALL
			-5	–	–	–	–		-5	ALL	ALL	ALL	ALL	–	–
			-6	–	–	–	–		-6	12	13	–	–	–	–
									-8	–	–	–	–	–	–
HYDRO SHIFT	G-700	H681	-4	ALL	ALL	ALL	ALL	H681	-4	8	9	8	9	8	9
			-5	–	–	–	–		-5	8	9	8	9	8(1)	9(1)
			-6	–	–	–	–		-6	8	9	–	–	–	–
									-8	–	–	–	–	–	–
	G-704	H681	-4	ALL	ALL	ALL	ALL	H681	-4	ALL	ALL	ALL	ALL	ALL	ALL
			-5	ALL	ALL	ALL	ALL		-5	8	9	8	9	8	9
			-6	ALL	ALL	ALL(1)	ALL(1)		-6	8	9	8	9	8	9
									-8	8	9	8	9	–	–

(1) MAY REQUIRE 95 LBS PSI AIR PRESSURE AT TOOL.

The following pages illustrate the various tools and accessories required to install Cherrylock rivets. Cherry rivets may be installed with either hand or power riveters depending on –

- The quantity of rivets to be installed.
- The availability of an air supply.
- The accessibility of work.
- The size and type of rivet to be installed.

In addition to a hand or power riveter, you must select the correct pulling head to complete the installation tool. Pulling heads are not furnished with the riveters but must be ordered separately. Each Cherrylock riveter is designed to do a specific task economically and efficiently. These riveters are of heavy-duty design for long life in a shop environment. They incorporate a separate locking-collar driving feature to ensure head and flush rivet installation without stem shaving. Complete assembly and component data is available to assist your tool crib in maintaining and overhauling these tools. Riveters are illustrated in Figures 6-24 through 6-26; pulling heads in Figure 6-27.

G-36 Hand Riveter

The Cherry G-36 hand riveter (Figure 6-24) is a lightweight, fast-operating tool designed for use in production and repair work. It is especially adaptable to working in confined locations. This tool is operated with one hand and works on a simple, dependable ratchet principle. The G-36 riveter is 9 1/2 inches long without a pulling head, weighs only 1 1/2 pounds, and has a 1 1/4-inch stroke. It will easily install most aluminum blind rivets up to 3/16 inch in diameter and the smaller diameters of steel, Monel,

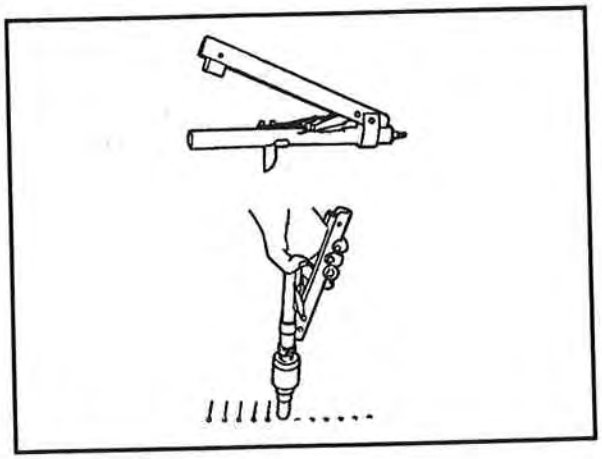

Figure 6-24. G-36 hand riveter

Downloaded from http://www.everyspec.com

and stainless steel rivets. Refer back to Table 6-35 for complete tool capacity information.

Pulling heads are not furnished with this tool but must be ordered separately. When ordering heads, be sure to specify the shank diameter and head style (universal or countersunk). Pulling head is used with the G-36 hand riveter to install Cherrylock rivets. Other types of pulling heads may be used on these riveters by using the adapters listed in Figure 6-27.

G-700 Lightweight Cherrylock Riveter

The Cherry G-700 lightweight Cherrylock riveter (Figure 6-25) is a compact pneumatic-hydraulic tool designed specifically for efficient installation of Cherrylock rivets. It weighs only 5 3/4 pounds and can be operated in any position with one hand. The G-700 is 10 5/8 inches high, has a 29/32-inch stroke, and develops a minimum of 1220 pounds pull on 90 to 125 pounds per square inch of air pressure at the tool. See Table 6-35 for complete tool capacity information.

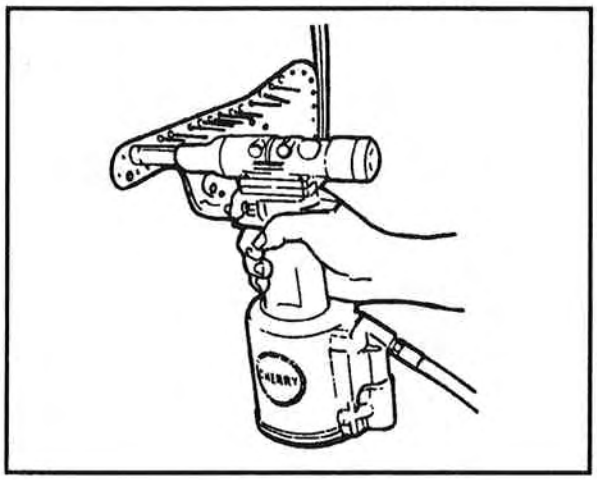

Figure 6-25. G-700 Lightweight Cherrylock riveter

Pulling heads are not furnished with this tool but must be ordered separately. When ordering heads, be sure to specify the shank diameter and head style (universal or countersunk) of the rivets. H681-series pulling heads fit directly on this tool to install both bulbed and standard Cherrylock rivets. Other types of pulling heads may be used on these riveters by using the adapters listed (Figure 6-27).

G-784 Universal Cherrylock Riveter

The G-784 universal Cherrylock riveter (Figure 6-26) is a pneumatic-hydraulic installation tool designed specifically for the efficient installation of rivets in most diameters and strength levels. It weighs only 8 pounds and can be operated in any position with one hand. The G-784 is 12 inches high, has a 15/16-inch stroke, and develops a minimum of 2650 pounds of pull on 90 to 125 pounds per square inch of air pressure at the tool. It will install nearly all diameters of Cherrylock rivets up to a 1/2-inch grip ("A" group only). See Table 6-35 for complete tool capacity information.

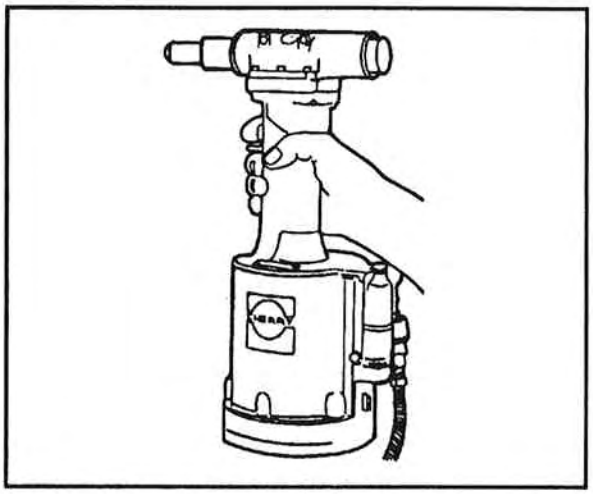

Figure 6-26. G-784 Universal Cherrylock riveter

Pulling heads are not furnished with this tool but must be ordered separately. When ordering heads, be sure to specify the shank diameter and head style (universal or countersunk). H681-series pulling heads fit directly on this tool to install both bulbed and standard Cherrylock rivets. Other types of pulling heads may be used on these riveters by using the adapters listed (Figure 6-27).

Pulling Heads for Bulbed and Wiredraw Cherrylock Rivets

H681 Series

A separate pulling head is required for each diameter of Cherrylock rivet. Although universal (U) pulling heads are available, it is acceptable to use countersunk (C) pulling heads to install both universal- and countersunk-head Cherrylock rivets. These heads fit directly on all Cherry hydro-shift riveters. H681 pulling heads (A) come in four extended lengths to reach into difficult areas (Table 6-36). These are 2-, 6-, 12-, and 24-inch extensions added to the normal head length of 2 9/16 inches.

Downloaded from http://www.everyspec.com

A

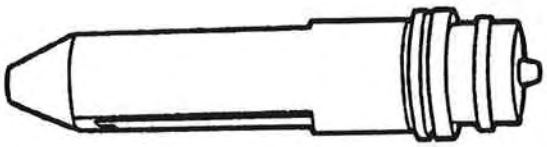

B

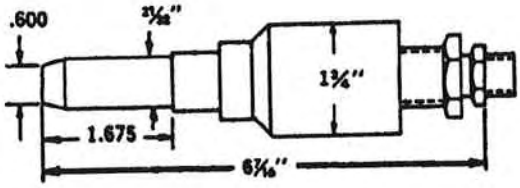

ADAPTERS	
RIVET DIAMETER	PULLING HEAD NUMBER
1/8"	H615B-4C { Universal Head, Countersunk Head; H615B-4S Uni-Sink Head
5/32"	H615B-5C { Universal Head, Countersunk Head; H615B-5S Uni-Sink Head
3/16"	H615B-6C { Universal Head, Countersunk Head; H615B-6S Uni-Sink Head

C

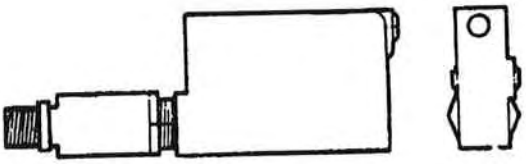

ADAPTERS	
RIVET DIAMETER	PULLING HEAD NUMBER
1/8"	H642-4U15 Universal Head H642-4C15 Countersunk Head
5/32"	H642-5U15 Universal Head H642-5C15 Countersunk Head
3/16"	H642-6U15 Universal Head H642-6C15 Countersunk Head

Figure 6-27. Pulling heads for bulbed and wiredraw Cherrylock rivets

Downloaded from http://www.everyspec.com

Table 6-36. H681 pulling heads

RIVET DIAMETER	PULLING HEAD NUMBER	DIMENSIONS	
		A	B
3/32"	H681-3C { Universal Head / Countersunk Head (MS 20426)	.163	.332
1/8"	H681-4C { Universal Head / Countersunk Head (MS 20426)	.208	.341
	H681-4F Countersunk Head (156°)	.430	.358
	H681-4S Countersunk Head (NAS 1097)	.174	.341
	H681-B166-4 Uni-Sink Head	.250	.359
5/32"	H681-5C { Universal Head / Countersunk Head (MS 20426)	.269	.352
	H681-5F Countersunk Head (156°)	.535	.338
	H681-5S Countersunk Head (NAS 1097)	.225	.352
	H681-B166-5 Uni-Sink Head	.313	.377
3/16"	H681-6C { Universal Head / Countersunk Head (MS 20426)	.335	.386
	H681-6F Countersunk Head (156°)	.625	.367
	H681-6S Countersunk Head (NAS 1097)	.281	.386
	H681-B166-6 Uni-Sink Head	.375	.419
1/4"	H681-8C { Universal Head / Countersunk Head (MS 20426)	.458	.398
	H681-8S Countersunk Head (NAS 1097)	.374	.398

Downloaded from http://www.everyspec.com

H615B Series

A separate pulling head is required for each shank diameter of Cherrylock rivets. These pulling heads (B) fit directly onto Cherry G-36 riveters; they will fit other riveters by using the adapters listed. Universal heads are also available for improved heat seating.

H642 (15-Series)

These offset pulling heads (C) are designed for installing Cherrylock rivets of up to 1/2-inch grip length in limited access areas. A separate pulling head is required for each rivet head style (universal or countersunk) and each shank diameter. These pulling heads fit directly onto Cherry G-36 riveters and will fit on other riveters by using adapters listed.

Accessories for Cherry Rivet Tools

Refer to Figure 6-28.

Adapters

The G6AA right angle adapter (A) permits the installation of Cherrylock rivets in many areas not normally accessible with standard tools. It fits directly on the G-36 hand riveter and will accept the H615 or H642 (15-series) pulling head. The 680B46 adapter (B) fits all Cherry hydro-shift riveters to permit the use of H615 or H642 (15-series).

Extensions

G6H extensions (C) help reach many restricted installation spots by increasing the overall length of a pulling head. They fit directly on Cherry G-36 riveters and will accept the screw-on type of pulling head (H615). Standard extensions are the G6HEA-2 (2 inches long) and the G6HEA-4 (4 inches long). Special lengths can be made to order.

Gages

The following gages are used with Cherry rivet tools:

- 269C3 grip gage (D) – a simple self-explanatory gage for determining material thickness and proper rivet grip length.
- T-172 rivet hole-size gage (E) – a precision-ground, go/no-go gage used to check holes drilled for Cherry blind rivets. They come in all standard rivet diameters plus the oversize rivet diameters. Table 6-37 shows corresponding rivet diameters and gage numbers.
- 628 setting gage (F) – used to adjust the shift point and lock ring anvil settings on Cherrylock mechanical pulling heads H615, H640, H642, and H690. Each rivet diameter requires a separate gage. The correct gage, with instructions for its use, is furnished with each new pulling head:

  1/8" diameter – #628-4 (green)

  5/32" diameter – #628-5 (red)

  3/16" diameter – #628-6 (blue)

  1/4" diameter – #628-8 (aluminum)
- 680A159 setting gage (G) – used to adjust the shift point setting on Cherry hydro-shift riveters. One of these gages, with instructions for its use, is furnished with each new hydro-shift riveter.
- 680A60 setting gage (H) – used for close tolerance settings of the stroke on all Cherry hydro-shift riveters. Each rivet diameter requires a separate gage:

  3/32" diameter – 680A60B-3

  1/8" diameter – 680A60B-4

  5/32" diameter – 680A60B-5

  3/16" diameter – 680A60B-6

  1/4" diameter – 680A60B-8 53
- Anvil gage (I) – go/no-go gage used to check the hole diameters of lock ring anvils in Cherrylock pulling heads H615, H640, H642, H681, and H690. Their use will help eliminate installation problems caused by worn, oversized anvils. Each rivet diameter requires a separate gage:

  3/32" diameter – P913

  1/8" diameter – P857

  5/32" diameter – P857

  3/16" diameter – P858

  1/4" diameter – P859

Maintenance Items for Cherry Rivet Tools

Refer to Figure 6-29.

Downloaded from http://www.everyspec.com

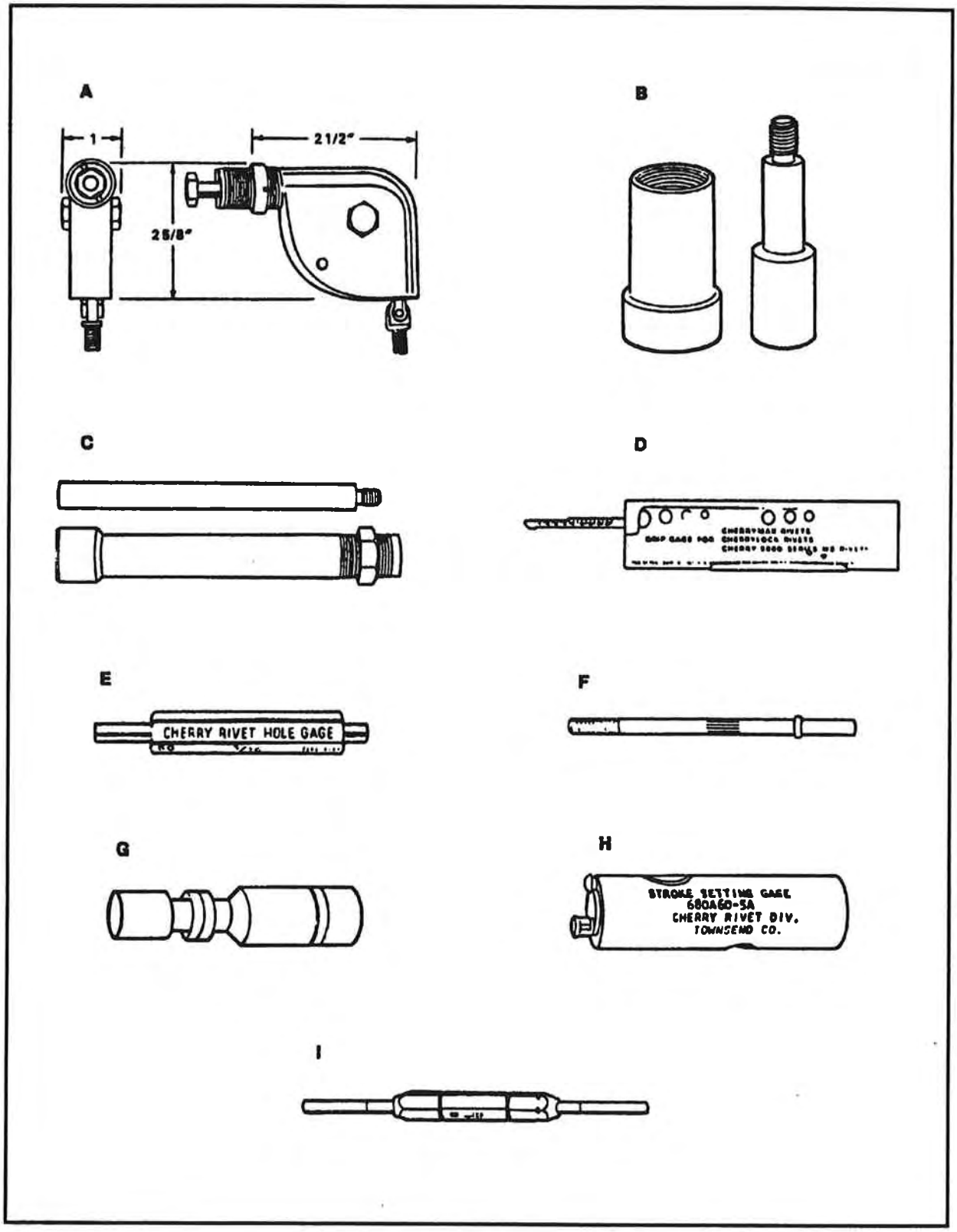

Figure 6-28. Accessories for Cherry rivet tools

Downloaded from http://www.everyspec.com

Table 6-37. Rivet diameters and gage numbers

RIVET DIAMETER	GAGE NUMBER
3/32"	T-172-3
1/8"	T-172-4
5/32"	T-172-5
3/16"	T-172-6
1/4"	T-172-8
1/8" Bulbed Cherrylock	T-172-400
5/32" Bulbed Cherrylock	T-172-500
3/16" Bulbed Cherrylock	T-172-600

A

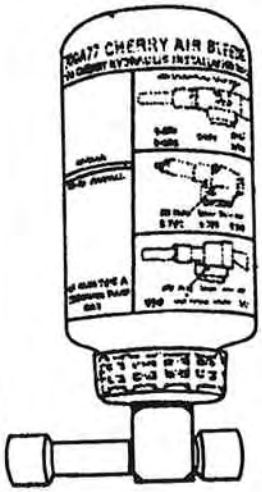

B

CHERRY TOOL	SERVICE KIT NUMBER
G-86 AND G-88	G86/88KS
G-684	G684KS
G-685S and G-686S	G685S/686SKS
G-687 and G-688	G687/688KS
G-689	G689KS
G-695	G695KS
G-700	G700KS
G-715	G715KS
G-740	G740KS
G-784	G784KS

Figure 6-29. Maintenance items for Cherry rivet tools

Downloaded from http://www.everyspec.com

707A77 Air Bleeder

To keep Cherry rivet hydraulic tools operating at peak efficiency, the hydraulic system must be kept full of fluid and free of air. Based on the same principle used to bleed the hydraulic brake system of an automobile, the 700A77 Cherry air bleeder (A) will quickly and easily remove all air and ensure complete filling of the tool with hydraulic fluid. It may be used in the tool crib or right on the production line, but it requires a few minutes to perform this vital function. The air bleeder is a small item that does a big job: it prevents downtime.

Service Kits

An assortment of O-rings, seals, screws, washers, and gaskets likely to need replacing over time is available in kit form for each Cherry power tool (B). To avoid unnecessary downtime, it is advisable to have these kits on hand for the tools being serviced.

Special Assembly Tools

To completely dismantle and reassemble Cherry hydraulic tools, it is advisable to use certain special wrenches and seal guides designed for that purpose. The tools shown in Figure 6-30 may be obtained separately or preferably in kit form as indicated.

CHERRYMAX RIVETS

CherryMAX consists of four components assembled as a single unit (Figure 6-31):

- A fully serrated fastener stem with break notch, shear ring, and plug section.
- A locking collar that provides a mechanical lock to the stem.
- A fastener sleeve with a locking collar dimple to receive the locking collar.
- A CherryMAX driving anvil, which ensures flush stem breaks and flush-installed collar at all times.

All fasteners should be specified and used according to the manufacturer's recommendations, according to the grip range and hole size information provided in this chapter.

Refer to Figure 6-32 for a description of how CherryMAX rivets work. Before pulling begins, engage pulling serrations of stem with jaws of pulling head (A). Stem is pulled into rivet sleeve and starts to form a large bulbed blind head, seats the manufactured head, and clamps the sheets tightly together. Hole-filling action begins (B). Formation of blind head and hole filling are completed. Shear ring shears from cone to allow stem to pull further into rivet sleeve (C). Pressure of the driving anvil forms the locking collar into collar recess, locking stem and sleeve together. Continued pulling fractures stem, providing a flush burr-free installation. Installation is now complete (D).

Refer to part numbering system (Figure 6-33) and Table 6-38.

Selection

Grip Length

The grip range of all CherryMAX rivets is in increments of 1/16 inch, with the ultimate dash number indicating the maximum grip in sixteenths. (Example: a -4 grip rivet has a grip range of 3/16 inch to 1/4 inch.) See Table 6-39 for grip range data.

To determine the grip rivet to use, measure the material thickness with a 269C3 Cherry selector gage. Always read to the next higher number (Figure 6-34). To find the rivet grip number, determine the total thickness of the material to be fastened and locate its range in Table 6-39. Then read directly across to the right to find the grip number.

Strength

Table 6-40 gives minimum rivet shear and tensile strength in steel coupons for Monel and aluminum. CherryMAX rivets may be substituted for aluminum solid rivets in most applications. Table 6-41 includes aluminum solid rivet figures for quick comparison.

Nominal-Diameter Rivets

Tables 6-42, 6-43, and 6-44 give detailed specifications for 100° flush-head, nominal-diameter rivets. Tables 6-45, 6-46, and 6-47 give detailed specifications for universal-head, nominal-diameter rivets.

Oversize-Diameter Rivets

Tables 6-48, 6-49, and 6-50 give detailed specifications for 100° flush-head, oversize-diameter rivets. Tables 6-51, 6-52, and 6-53 give detailed specifications for universal-head, oversize-diameter rivets.

CHERRYMAX TOOLING

G-27 Hand Riveter Kit

The G-27 kit is a lightweight (13-ounce) tool for use in low-production applications, such as repair, maintenance,

Downloaded from http://www.everyspec.com

TOOL KIT NUMBER	CHERRY TOOL MODEL	KIT consists of following individual tools . . . (pictured below)
G85KT	G-86, G-88 & G-695	A, B, C, D, E, F, G & H.
G684KT	G-684	I, J, K, O & R.
G685KT	G-685S, G-686S G-687, G-688 & G-689	A, B, C, D, E, F, G, H, I, J, K, O & R.
G700KT	G-700	J, K, L, M, N, O, P, Q & S.
G784KT	G-784	I, J, K, L, O, Q & R.

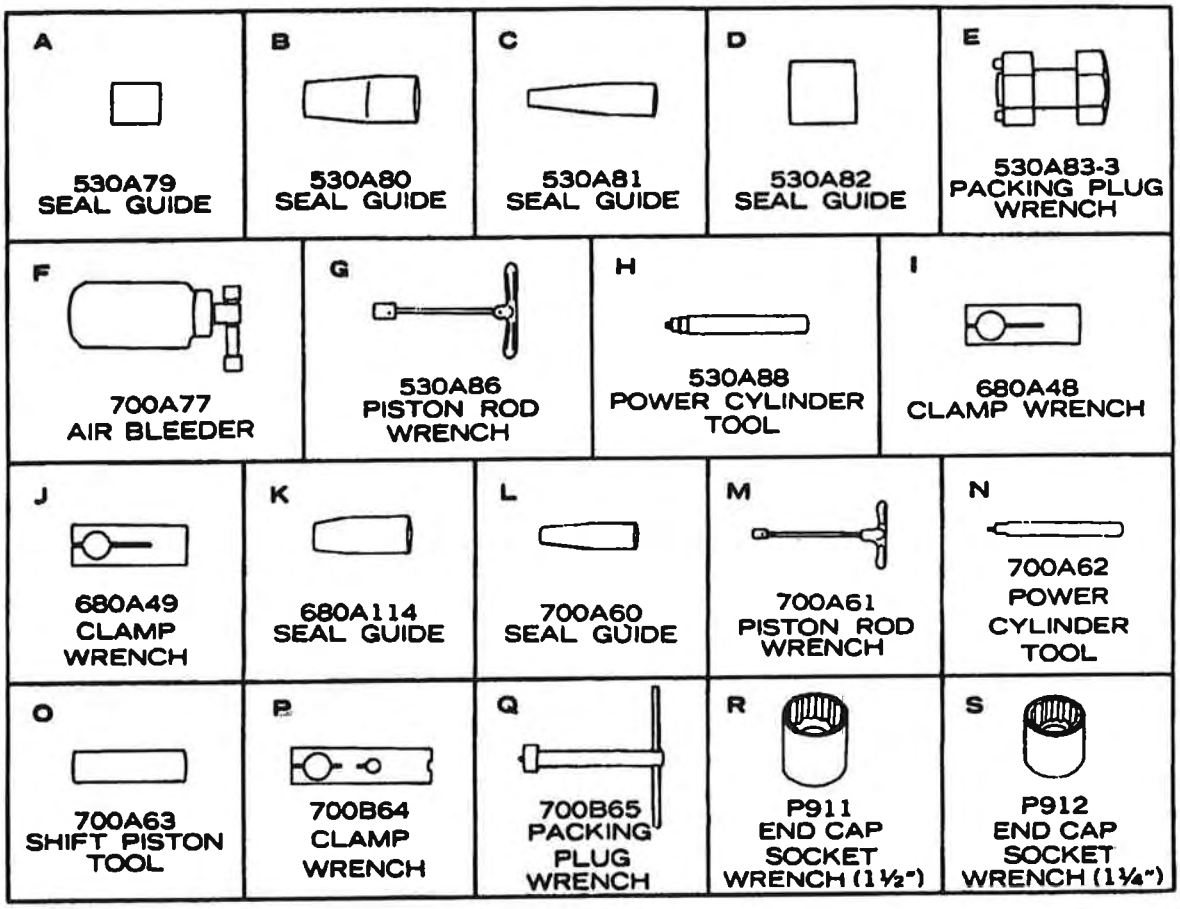

Figure 6-30. Special assembly tools

Downloaded from http://www.everyspec.com

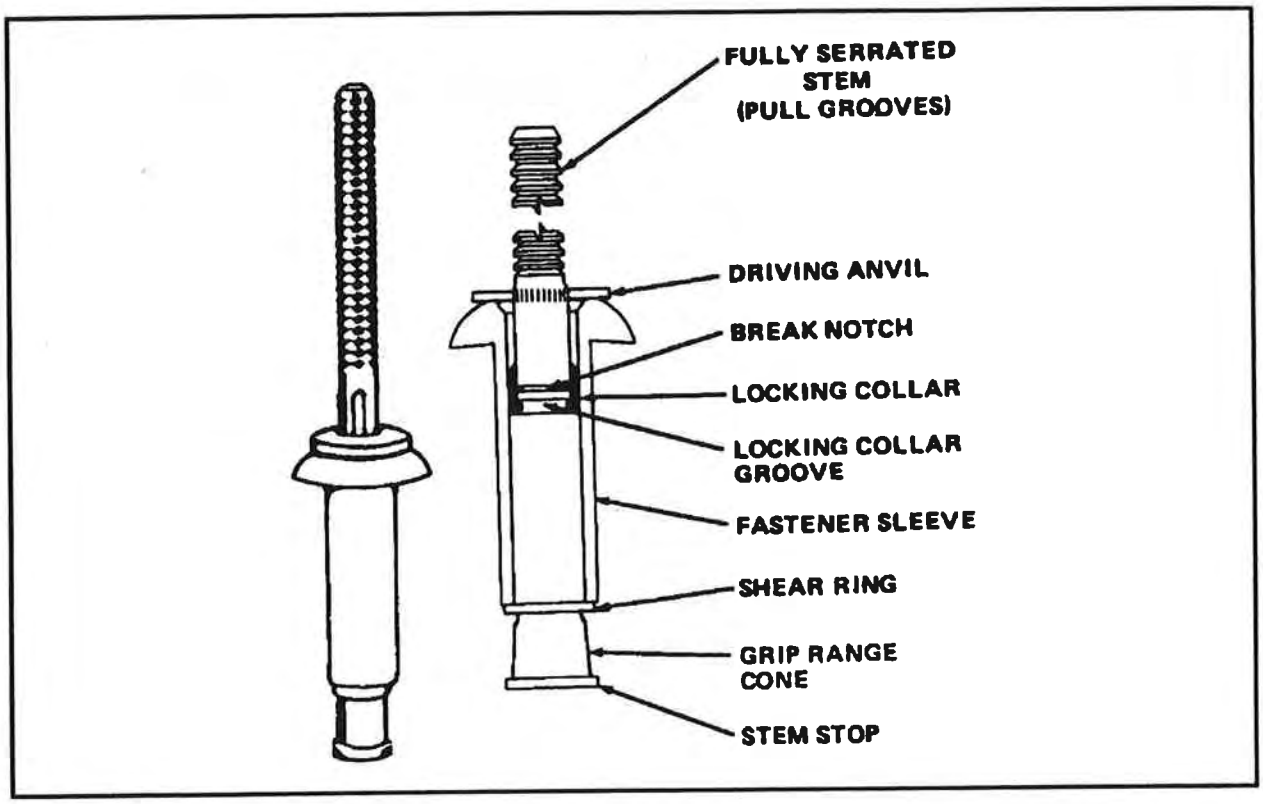

Figure 6-31. CherryMAX rivet

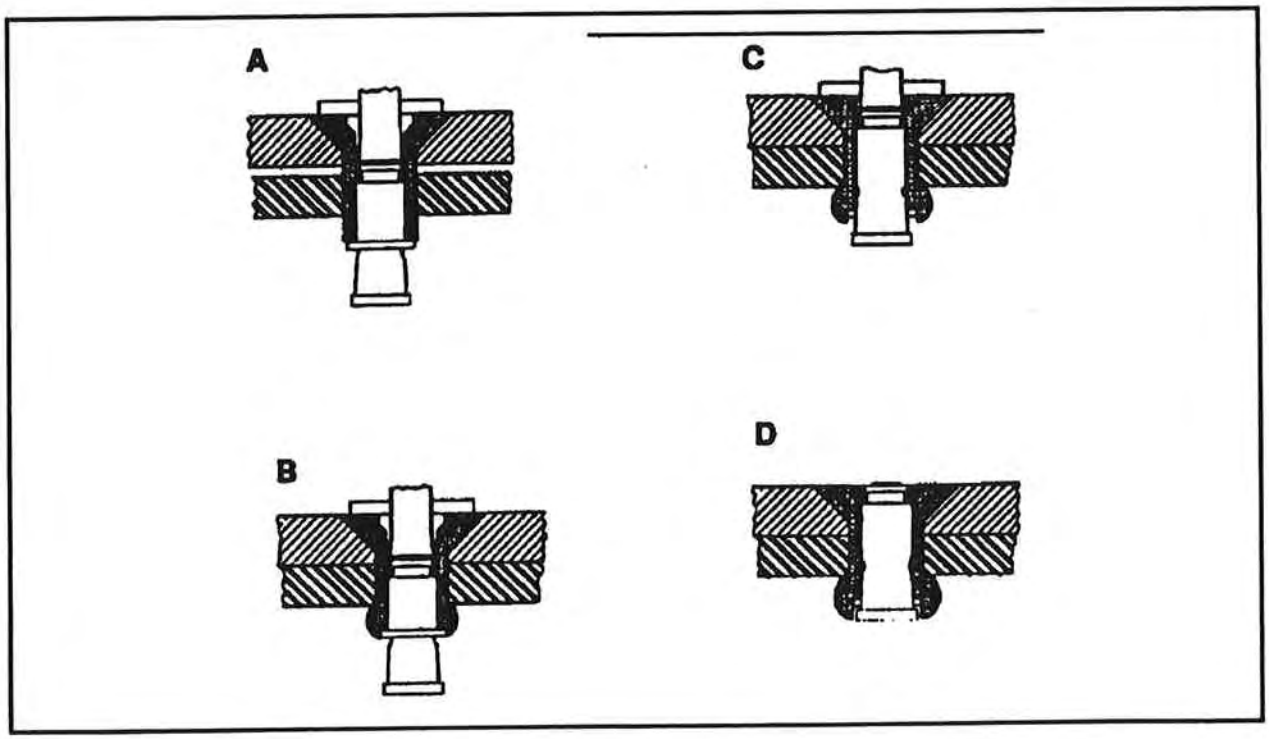

Figure 6-32. CherryMAX rivet installation

Downloaded from http://www.everyspec.com

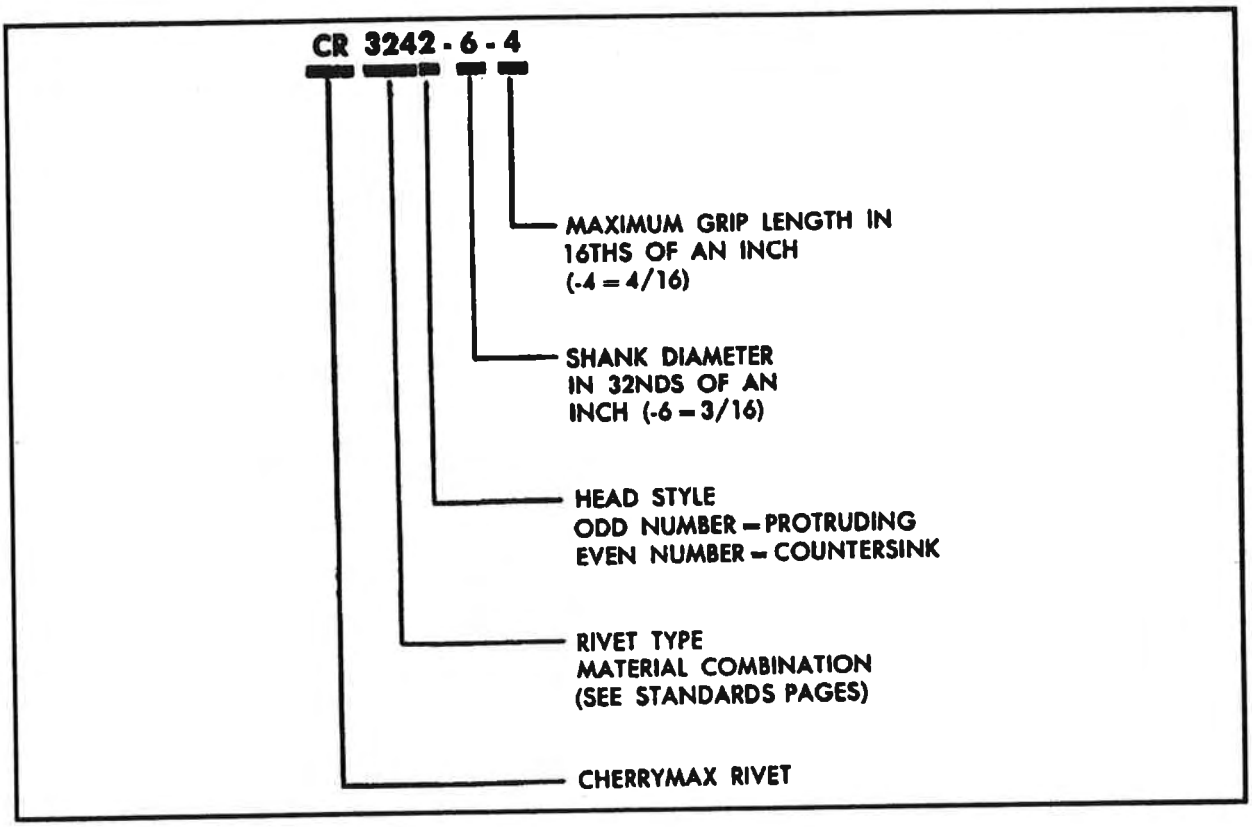

Figure 6-33. Part numbering system

Table 6-38. Cross reference (part number-military standard part number)

CHERRYMAX PART NUMBER	DIAMETER SERIES	SLEEVE MATERIAL	STEM MATERIAL	MILITARY STANDARD PART NUMBER*
CR3213	Nominal	Alum 5056	Alloy Steel	M7885/2
CR3212	Nominal	Alum 5056	Alloy Steel	M7885/3
CR3523	Nominal	Monel	15-7 CRES	M7885/4
CR3524	Nominal	Monel	15-7 CRES	M7885/5
CR3243	Oversize	Alum 5056	Alloy Steel	M7885/6
CR3242	Oversize	Alum 5056	Alloy Steel	M7885/7
CR3553	Oversize	Monel	15-7 CRES	M7885/8
CR3552	Oversize	Monel	15-7 CRES	M7885/9

*DIAMETER AND GRIP DASH NUMBERS ARE THE SAME FOR CHERRY AND MILITARY STANDARD PART NUMBERS.

Example:

M7885/4-4-2 and CR3523-4-2

Length	Length
Diameter	Diameter
*MIL-STD Part No	*Cherry Part No

*Indicates head style, material composition, and nominal or oversize diameter.

Downloaded from http://www.everyspec.com

Table 6-39. Grip range-CherryMAX rivets

Material Thickness Range		Rivet
MINIMUM	MAXIMUM	GRIP NO
See Std Pages	1/16"	-1
See Std Pages	1/8"	-2
1/8"	3/16"	-3
3/16"	1/4"	-4
1/4"	5/16"	-5
5/16"	3/8"	-6
3/8"	7/16"	-7
7/16"	1/2"	-8
1/2"	9/16"	-9
9/16"	5/8"	-10
5/8"	11/16"	-11
11/16"	3/4"	-12

NOTE: For double dimpled sheets, add countersunk head height to material thickness.

Table 6-40. Minimum shear and tensile strength (pounds) in steel coupons—CherryMax rivets

CHERRYMAX RIVETS			SINGLE SHEAR								TENSILE			
			ALUMINUM				MONEL				ALUMINUM		MONEL	
			Nominal		Oversize		Nominal		Oversize		Nom	O/S	Nom	O/S
Rivet Dia & Grip		Sheet Thickness	3212 3222	3213 3223	3242 3252	3243 3253	3522	3523	3552	3553	3212 3213 3222 3223	3242 3243 3252 3253	3522 3523	3552 3553
-4 (1/8")	-2	2 x .062	411	505	480	592	485	646	570	750	285	345	400	490
	-3	2 x .093	531	584	614	692	667	730	785	895				
	-4	2 x .125	651	655	741	771	730	730	895	895				
	-5	2 x .156	664	664	814	814	730	730	895	895				
-5 (5/32")	-2	2 x .062	–	699	–	805	–	882	–	1015	445	530	635	740
	-3	2 x .093	714	840	815	982	859	1134	1010	1290				
	-4	2 x .125	862	929	977	1080	1080	1134	1270	1353				
	-5	2 x .156	1012	1018	1137	1177	1134	1134	1353	1353				
	-6	2 x .187	1030	1030	1245	1245	1134	1134	1353	1353				
-6 (3/16")	-2	2 x .062	–	920	–	1015	–	1144	–	1255	635	710	890	1000
	-3	2 x .093	918	1131	1005	1240	1029	1438	1210	1575				
	-4	2 x .125	1095	1248	1200	1386	1284	1626	1510	1823				
	-5	2 x .156	1310	1355	1388	1504	1550	1626	1823	1823				
	-6	2 x .187	1453	1462	1579	1617	1626	1626	1823	1823				
	-7	2 x .219	1480	1480	1685	1685	1626	1626	1823	1823				

NOTE 1. Values shown are fastener capabilities only. Design values will be limited by the bearing strength of the sheet material used.
2. For rivet grips greater than listed, use highest value shown for the basic part number and diameter.

Downloaded from http://www.everyspec.com

Table 6-41. Joint allowable loads (pounds) per MIL-HDBK-5 criteria (values listed are the lower of ultimate or 1.5 times yield average)

RIVET SHANK DIA	RIVET PART NUMBER	Universal & Countersunk-Head Aluminum Rivets in 2024 T3 Alclad Aluminum. Countersunk-Head Rivets in Machine-Countersunk Sheet.														
		SHEET THICKNESS														
		.016	.020	.025	.032	.040	.050	.063	.071	.080	.090	.100	.125	.160	.190	.250
1/8" NOM	CR 3212 CSK	–	–	–	114	203	290	405	470	495	524	561	625	664	664	664
	CR 3213 UNIV	152	206	272	342	392	454	518	538	561	586	611	664	664	664	664
1/8" O/S	CR 3242 CSK	–	–	171	236	312	405	528	594	620	642	658	722	801	814	814
	CR 3243 UNIV	187	245	319	395	451	520	610	641	667	697	726	801	814	814	814
1/8" SOLIDS	MS 20426 AD CSK	-	147	221	272	309	340	363	373	388	388	388	388	388	388	388
	MS 20470 AD UNIV	–	–	366	374	386	388	388	388	388	388	388	388	388	388	388
5/32" NOM	CR 3212 CSK	–	–	–	–	204	315	449	539	648	734	768	867	982	1030	1030
	CR 3213 UNIV	–	238	320	438	532	610	711	772	810	841	872	951	1030	1030	1030
5/32" O/S	CR 3242 CSK	–	–	–	273	366	483	633	726	830	922	950	1020	1120	1205	1245
	CR 3243 UNIV	–	288	378	506	608	694	804	873	949	987	1025	1115	1245	1245	1245
5/32" SOLIDS	MS 20426 AD CSK	-		165	300	398	479	523	542	560	575	596	596	596	596	596
	MS 20470 AD UNIV	–	–	–	551	574	593	596	596	596	596	596	596	596	596	596
3/16" NOM	CR 3212 CSK	–	–	.	.	–	–	507	603	734	863	987	1128	1286	1410	1480
	CR 3213 UNIV	–	–	362	502	681	784	904	974	1060	1140	1178	1270	1400	1480	1480
3/16" O/S	CR 3242 CSK	–	–	–	-	407	543	717	826	945	1083	1205	1315	1425	1525	1685
	CR 3243 UNIV	–	–	429	576	741	858	985	1065	1155	1255	1315	1420	1570	1685	1685
3/16" SOLIDS	MS 20426 AD CSK	–	–	–	–	410	584	705	739	769	795	818	853	862	862	862
	MS 20470 AD UNIV	–	–	–	–	804	836	862	862	862	862	862	862	862	862	862

Table 6-42. Dash numbers (100° flush-head, nominal-diameter rivets)

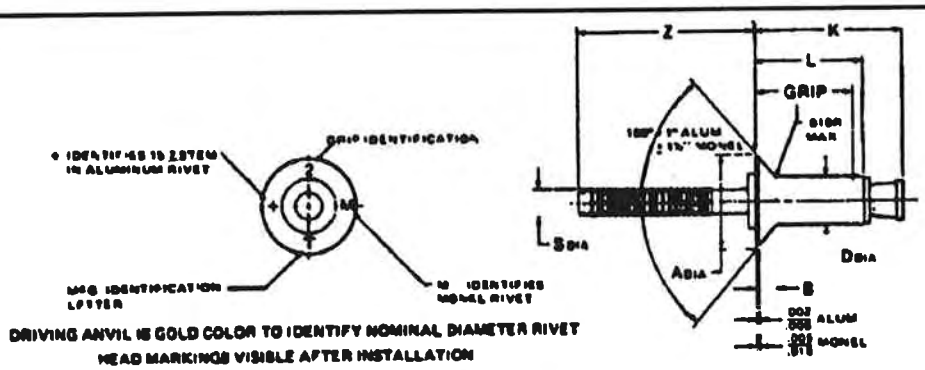

DIA DASH NO.	AD ±.004	B REF	D +.003 −.001	E REF	Z MIN	HOLE LIMITS
–4	.225	.042	.126	.073	.87	.129–.132
–5	.286	.056	.157	.091	.94	.160–.164
–6	.353	.070	.188	.110	.94	.192–.196

Downloaded from http://www.everyspec.com

Table 6-43. Rivet diameters (100° flush-head, nominal-diameter rivets)

GRIP LIMITS 1/16 RANGE		1/8 DIAMETER			5/32 DIAMETER			3/16 DIAMETER		
MIN	MAX	DASH NO.	L ±.010	K MAX	DASH NO.	L ±.010	K MAX	DASH NO.	L ±.010	K MAX
ⓒ	.125	4–2	.224	.45	5–2	.230	.47	6–2	.262	.51
.126	.187	4–3	.287	.51	5–3	.293	.53	6–3	.325	.57
.188	.250	4–4	.349	.57	5–4	.355	.59	6–4	.387	.64
.251	.312	4–5	.412	.63	5–5	.418	.66	6–5	.450	.70
.313	.375	4–6	.474	.70	5–6	.480	.72	6–6	.512	.76
.376	.437	4–7	.537	.76	5–7	.543	.77	6–7	.575	.82
.438	.500	4–8	.599	.82	5–8	.606	.84	6–8	.637	.88
.501	.562	4–9	.662	.88	5–9	.668	.90	6–9	.700	.95
.563	.625				5–10	.730	.96	6–10	.762	1.01
.626	.687				5–11	.793	1.02	6–11	.825	1.07
.688	.750							6–12	.887	1.13

Table 6-44. Rivet number, material, and finish description (100° flush-head, nominal-diameter rivets)

RIVET NUMBER	NAS 523 CODE	MATERIAL			FINISH		
		SLEEVE	STEM	LOCK RING	SLEEVE	STEM	LOCK RING
CR 3212	ARM	5056 ALUM. ALLOY QQ-A-430	8740 ALLOY STEEL AMS 6322	A-286 CRES AMS 5731	MIL-C-5541 PLAIN COLOR	CAD PLATE QQ-P-416 TYPE II CL. 2	NONE
CR 3222	–	5056 ALUM. ALLOY QQ-A-430	15-7 PH CRES AMS 5657	A-286 CRES AMS 5731	MIL-C-5541 PLAIN COLOR	CAD PLATE QQ-P-416 TYPE I CL. 2	NONE
CR 3622	–	MONEL QQ-N-281	15-7 PH CRES AMS 5657	A-286 CRES AMS 5731	NONE	DRY FILM CHERRY SPEC. C30	NONE
CR 3622P	–	MONEL QQ-N-281	15-7 PH CRES AMS 5657	A-286 CRES AMS 5731	CAD PLATE QQ-P-416 TYPE II CL. 2	CAD PLATE QQ-P-416 TYPE I CL. 2	NONE

NOTE: ⓒ HEAD DIAMETERS ARE TO THEORETICAL PROJECTION.

ⓒ

DASH NO.	MIN GRIP
–4	.063
–5	.065
–6	.080

DO NOT CLEAN OR DEGREASE PRIOR TO INSTALLATION – LUBRICANT MUST NOT BE REMOVED.

Downloaded from http://www.everyspec.com

Table 6-45. Dash numbers (universal-head, nominal-diameter rivets)

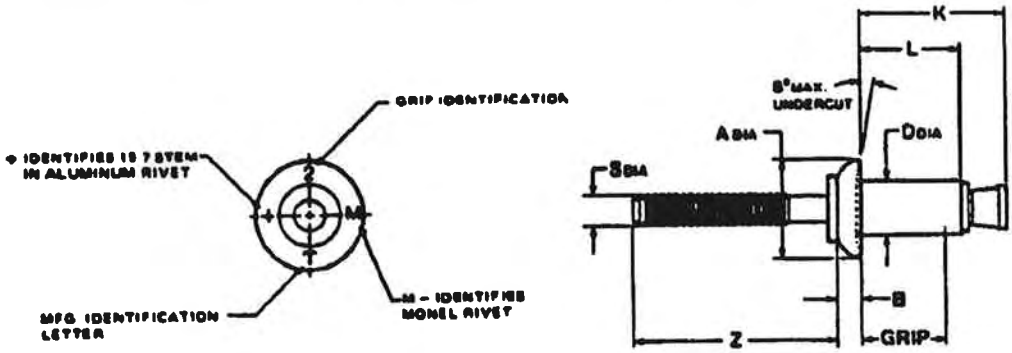

DRIVING ANVIL IS GOLD COLOR TO IDENTIFY NOMINAL DIAMETER RIVET

DIA DASH NO.	A ±.010	B +.010 −.000	D +.003 −.001	S REF	Z MIN	HOLE LIMITS
−4	.250	.054	.126	.073	.87	.128–.132
−5	.312	.067	.157	.091	.94	.160–.164
−6	.375	.080	.188	.110	.94	.192–.196

Table 6-46. Rivet diameters (universal-head, nominal-diameter rivets)

GRIP LIMITS 1/16 RANGE		1/8 DIAMETER			5/32 DIAMETER			3/16 DIAMETER		
MIN	MAX	DASH NO.	L ±.010	K MAX	DASH NO.	L ±.010	K MAX	DASH NO.	L ±.010	K MAX
0	.062	4–1	.161	.38	5–1	.187	.41	6–1	.219	.47
.063	.125	4–2	.224	.45	5–2	.230	.47	6–2	.282	.51
.126	.187	4–3	.287	.51	5–3	.293	.53	6–3	.329	.57
.188	.250	4–4	.349	.57	5–4	.356	.59	6–4	.387	.64
.251	.312	4–5	.412	.63	5–5	.418	.66	6–5	.450	.70
.313	.375	4–6	.474	.70	5–6	.480	.72	6–6	.512	.76
.376	.437	4–7	.537	.76	5–7	.543	.77	6–7	.575	.82
.438	.500	4–8	.599	.82	5–8	.606	.84	6–8	.637	.88
.501	.562	4–9	.662	.88	5–9	.668	.90	6–9	.700	.95
.563	.625				5–10	.730	.96	6–10	.762	1.01
.626	.687				5–11	.793	1.02	6–11	.825	1.07
.688	.750							6–12	.887	1.13

Downloaded from http://www.everyspec.com

Table 6-47. Rivet number, material, and finish description (universal-head, nominal-diameter rivets)

RIVET NUMBER	NAS 523 CODE	MATERIAL			FINISH		
		SLEEVE	STEM	LOCK RING	SLEEVE	STEM	LOCK RING
CR 2613	ARN	5056 ALUM ALLOY QQ A 430	8740 ALLOY STEEL AMS 6322	A 286 CRES AMS 5731	MIL C 5541 PLAIN COLOR	CAD PLATE QQ P 416 TYPE II CL 2	NONE
CR 2620	-	5056 ALUM. ALLOY QQ A 430	15 7 PH CRES AMS 5657	A-286 CRES AMS 5731	MIL C 5541 PLAIN COLOR	CAD PLATE QQ P 416 TYPE I CL. 2	NONE
CR 2630	-	MONEL QQ N 281	15 7 PH CRES AMS 5657	A 286 CRES AMS 5731	NONE	DRY FILM CHERRY SPEC. C 30	NONE
CR 2632P	-	MONEL QQ N 281	15 7 PH CRES AMS 5657	A-286 CRES AMS 5731	CAD PLATE QQ P 416 TYPE II CL 2	CAD PLATE QQ P 416 TYPE I CL 2	NONE

NOTE ●

DASH NO.	MIN GRIP
-4	.028
-5	.031
-6	.037

DO NOT CLEAN OR DEGREASE PRIOR TO INSTALLATION – LUBRICANT MUST NOT BE REMOVED.

Table 6-48. Dash numbers (100° flush-head, oversize-diameter rivets)

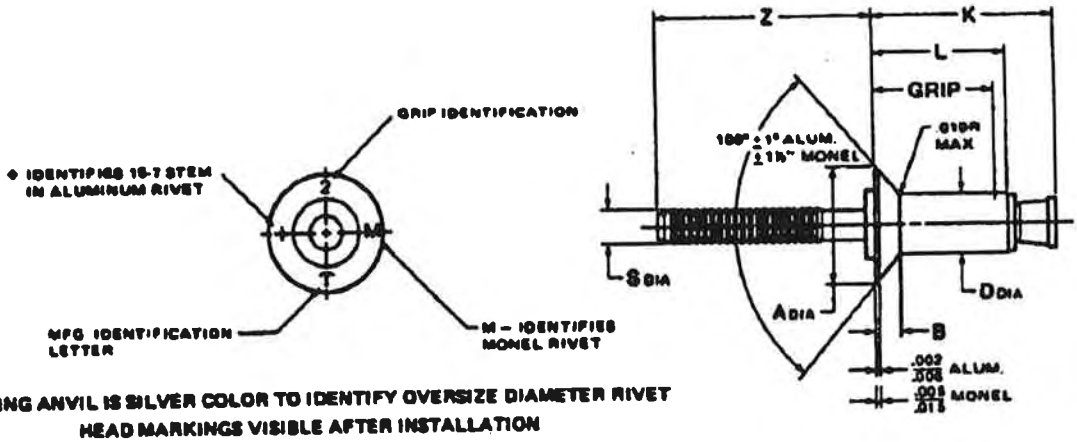

DRIVING ANVIL IS SILVER COLOR TO IDENTIFY OVERSIZE DIAMETER RIVET HEAD MARKINGS VISIBLE AFTER INSTALLATION

DIA DASH NO.	A● ±.004	B REF	D +.003 −.001	S REF	Z MIN	HOLE LIMITS
-4	.225	.035	.140	.081	.87	.143–.146
-5	.286	.047	.173	.100	.94	.176–.180
-6	.353	.063	.201	.117	.94	.205 .209

Downloaded from http://www.everyspec.com

Table 6-49. Rivet diameters (100° flush-head, oversize-diameter rivets)

GRIP LIMITS 1/16 RANGE		1/8 DIAMETER			5/32 DIAMETER			3/16 DIAMETER		
MIN	MAX	DASH NO.	L ±.010	K MAX	DASH NO.	L ±.010	K MAX	DASH NO.	L ±.010	K MAX
●	.126	4-2	.238	.45	5-2	.266	.47	6-2	.266	.48
.126	.187	4-3	.301	.52	5-3	.300	.53	6-3	.328	.55
.188	.250	4-4	.363	.58	5-4	.371	.60	6-4	.390	.62
.251	.312	4-5	.426	.65	5-5	.434	.66	6-5	.453	.68
.313	.375	4-6	.488	.71	5-6	.496	.72	6-6	.515	.74
.376	.437	4-7	.551	.78	5-7	.559	.79	6-7	.578	.82
.438	.500	4-8	.613	.84	5-8	.621	.85	6-8	.640	.89
.501	.562	4-9	.676	.90	5-9	.684	.91	6-9	.703	.96
.563	.625				5-10	.746	.98	6-10	.765	1.01
.626	.687				5-11	.809	1.04	6-11	.828	1.07
.688	.750							6-12	.890	1.14

Table 6-50. Rivet number, material, and finished description (100° flush-head, oversize-diameter rivets)

RIVET NUMBER	NAS 523 CODE	MATERIAL			FINISH		
		SLEEVE	STEM	LOCK RING	SLEEVE	STEM	LOCK RING
CR 3942	ARD	5056 ALUM. ALLOY QQ-A 430	5740 ALLOY STEEL AMS 5323	A 286 CRES AMS 5731	MIL C 5541 PLAIN COLOR	CAD PLATE QQ P 416 TYPE II CL. 2	NONE
CR 3942	ARD	5056 ALUM. ALLOY QQ-A 430	15 7 PH CRES AMS 5657	A 286 CRES AMS 5731	MIL C 5541 PLAIN COLOR	CAD PLATE QQ P 416 TYPE 1 CL. 2	NONE
CR 3942	ARF	MONEL QQ N 281	15 7 PH CRES AMS 5657	A 286 CRES AMS 5731	NONE	DRY FILM CHERRY SPEC. C 38	NONE
CR 3942P	-	MONEL QQ N 281	15 7 PH CRES AMS 5657	A 286 CRES AMS 5731	CAD PLATE QQ P 416 TYPE II CL. 2	CAD PLATE QQ P 416 TYPE 1 CL. 2	NONE

NOTE: ● HEAD DIAMETERS ARE TO THEORETICAL PROJECTION.

●

DASH NO	MIN GRIP
-4	046
-5	.063
-6	073

DO NOT CLEAN OR DEGREASE PRIOR TO INSTALLATION - LUBRICANT MUST NOT BE REMOVED.

Downloaded from http://www.everyspec.com

Table 6-51. Dash numbers (universal-head, oversize-diameter rivets)

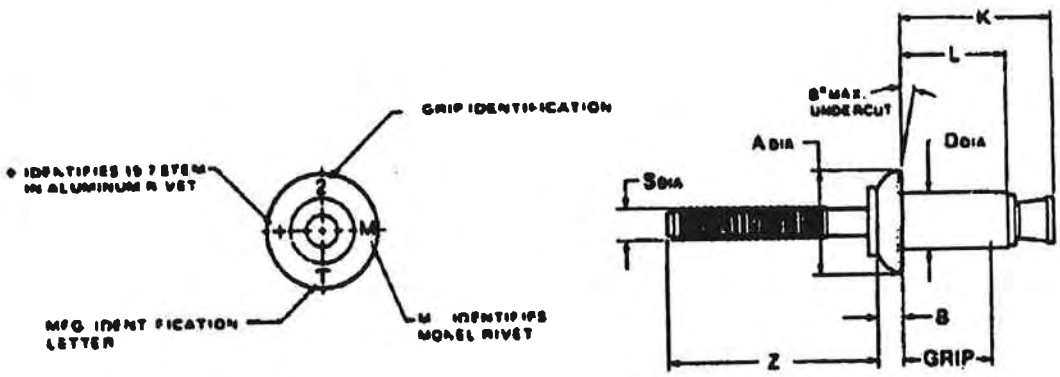

DRIVING ANVIL IS SILVER COLOR TO IDENTIFY OVERSIZE DIAMETER RIVET

DIA DASH NO.	A ±.010	B +.010 −.000	D +.003 −.001	S REF	Z MIN	HOLE LIMITS
−4	.250	.064	.140	.081	.87	.143−.146
−5	.312	.067	.173	.100	.94	.176−.180
−6	.375	.080	.201	117	.94	.206−.209

Table 6-52. Rivet diameters (universal-head, oversize-diameter rivets)

GRIP LIMITS 1/16 RANGE		1/8 DIAMETER			5/32 DIAMETER			3/16 DIAMETER		
MIN	MAX	DASH NO.	L ±.010	K MAX	DASH NO.	L ±.010	K MAX	DASH NO.	L ±.010	K MAX
0	.062	4−1	.175	.37	5−1	.203	.43	6−1	.242	.45
.063	.125	4−2	.238	.46	5−2	.246	.47	6−2	.265	.50
.126	.187	4−3	.301	.52	5−3	.309	.53	6−3	.328	.56
.188	.250	4−4	.363	.58	5−4	.371	.60	6−4	.390	.62
.251	.312	4−5	.426	.65	5−5	.434	.66	6−5	.453	.68
.313	.375	4−6	.488	.71	5−6	.496	.72	6−6	.515	.74
.376	.437	4−7	.551	.78	5−7	.559	.79	6−7	.578	.82
.438	.500	4−8	.613	.84	5−8	.621	.85	6−8	.640	.89
.501	.562	4−9	.676	.90	5−9	.684	.91	6−9	.703	.95
.563	.625				5−10	.746	.98	6−10	.765	1.01
.626	.687				5−11	.809	1.04	6−11	.828	1.07
.688	.750							6−12	.890	1.14

Downloaded from http://www.everyspec.com

Table 6-53. Rivet number, material, and finish description (unversal-head, oversize-diameter rivets)

RIVET NUMBER	NAS 523 CODE	MATERIAL			FINISH		
		SLEEVE	STEM	LOCK RING	SLEEVE	STEM	LOCK RING
CR 3243	ARE	5056 ALUM. ALLOY QQ-A-430	8740 ALLOY STEEL AMS 6322	A-286 CRES AMS 5731	MIL-C-8641 PLAIN COLOR	CAD PLATE QQ-P-416 TYPE II CL. 2	NONE
CR 3253	ARP	5056 ALUM. ALLOY QQ-A-430	15-7 PH CRES AMS 5657	A-286 CRES AMS 5731	MIL-C-8641 PLAIN COLOR	CAD PLATE QQ-P-416 TYPE I CL. 2	NONE
CR 3263	ARG	MONEL QQ-N-281	15-7 PH CRES AMS 5657	A-286 CRES AMS 5731	NONE	DRY FILM CHERRY SPEC. C-30	NONE
CR 3553P	–	MONEL QQ-N-281	15-7 PH CRES AMS 5657	A-286 CRES AMS 5731	CAD PLATE QQ-P-416 TYPE II CL. 2	CAD PLATE QQ-P-416 TYPE I CL. 2	NONE

NOTE: ①

DASH NO.	MIN GRIP
–4	.028
–5	.031
–6	.037

DO NOT CLEAN OR DEGREASE PRIOR TO INSTALLATION. LUBRICANT MUST NOT BE REMOVED.

or prototype work. The G-27 (Figure 6-35 [A]) will install all 1/8-inch-diameter aluminum CherryMAX rivets. It is packaged in a strong plastic case with room for assorted widely used rivets.

G-749 Hand Riveter

The G-749 riveter (Figure 6-35 [B]) is a powerful hydraulic tool designed specifically for installation of CherryMAX rivets where air is not available for power tools. It weighs 2 3/4 pounds and is 14 7/8 inches long without a pulling head.

Pulling heads are not furnished with the G-749; they must be ordered separately. The heads shown in Figure 6-36 will fit directly on this tool.

The G-749 has 0.518-inch stroke. It will install all 1/8-, 5/32-, and 3/16-inch-diameter CherryMAX rivets in all materials, head styles, and grip lengths.

D-100 Hand Riveter

The D-100-1 riveter (Figure 6-35 [C]) provides the ability to install all CherryMAX rivets (1/8 to 1/4), PullThru Nutplate rivets (3/32 to 1/8 inch), and all pop-type rivets (3/32 to 1/4 inch). In addition, pull-up studs and driving anvils are provided for Rivnut sizes 6-32, 8-32, 10-32, 1/4-28, 10-24, 1/4-20, 5/16-18, and 3/8-16. An adaptor is included to permit the tool to be used with the CherryMAX right angle, offset, and extended straight pulling heads (heads are provided with the D-100-2 only). The kit is supplied in a metal, weathertight carrying case along with operating instructions and parts list.

G-701 Power Riveter

The Cherry G-701 (Figure 6-35 [D]) is a pneumatic-hydraulic tool designed specifically for installation of CherryMAX rivets. It weighs just over 3 1/2 pounds and can be operated in any position with one hand. The G-701 consumes approximately 1.9 cubic feet of air at 20 cycles per minute. Its maximum noise level under load does not exceed 85 decibels (dB[A]).

Pulling heads are not furnished with this riveter; they must be ordered separately. H-701A-456 (straight), H763-456 (offset), and H753-456 (right-angle) pulling heads fit directly on the G-701 riveter.

The G-701 has a stroke of 0.492 and a pulling capacity of 1614 pounds on 90 pounds per square inch air pressure at the air inlet. Normal operating air pressure range is 90 to 120 pounds per square inch at the inlet. The G-701 riveter, equipped with any of the three pulling heads listed, will install all 1/8- and 5/32-inch-diameter CherryMAX rivets in all materials, head styles, and grip lengths.

G-704 Power Riveter

The Cherry G-704 (Figure 6-35 [E]) is a pneumatic-hydraulic tool designed specifically for installation of CherryMAX rivets. It weighs just over 4 1/2 pounds and can be operated in any position with one hand. It consumes approximately 3.9 cubic feet of air at 20 cycles per minute. Its maximum noise level under load does not exceed 85 decibels (dB[A]).

Pulling heads are not furnished with this riveter; they must be ordered separately. H701A-456 (straight),

Downloaded from http://www.everyspec.com

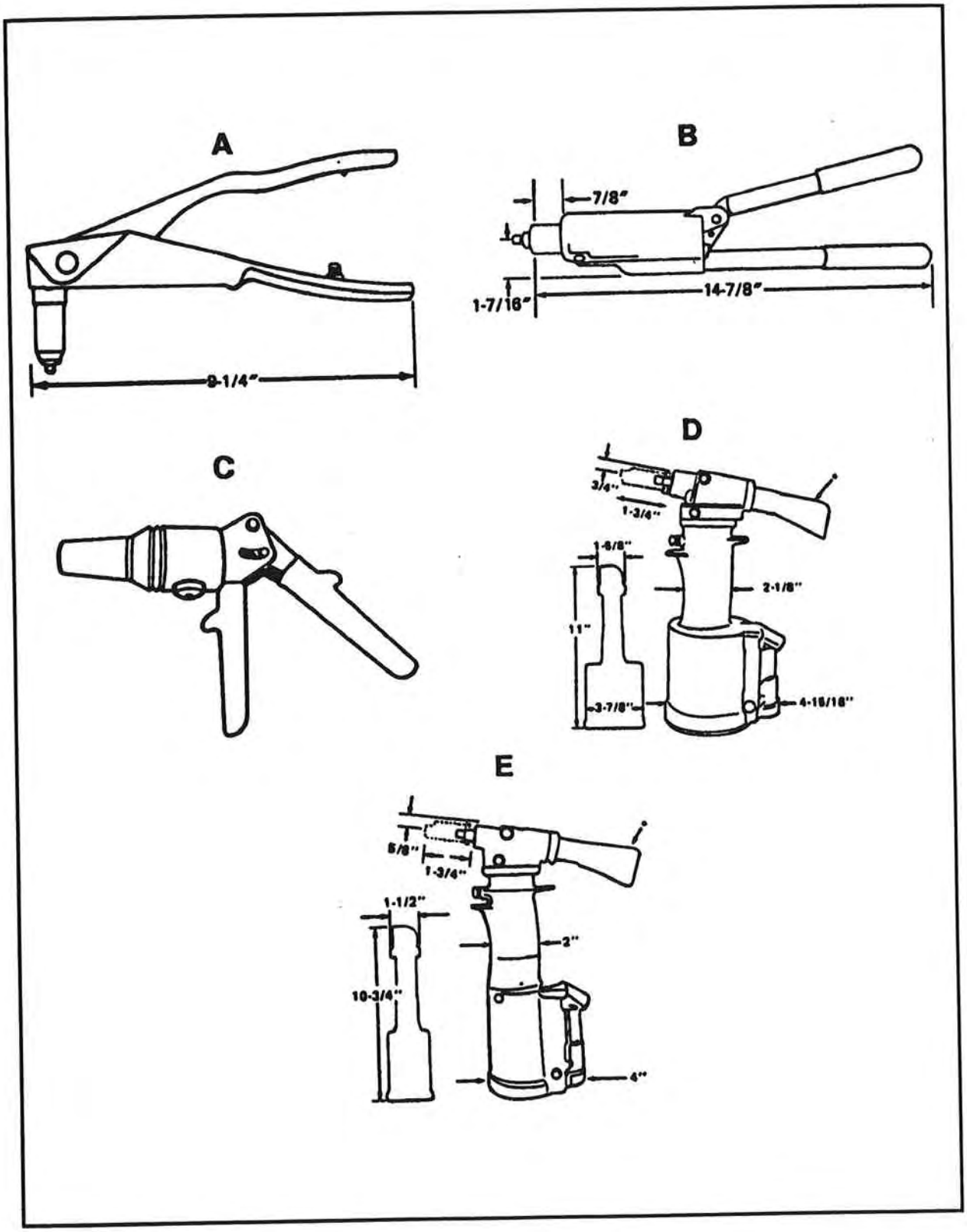

Figure 6-35. CherryMAX riveters

Downloaded from http://www.everyspec.com

H763-456 (offset), and H753-456 (right-angle) pulling heads fit directly on the G-704 riveter.

The G-704 has a stroke of 0.518 and a pulling capacity of 3136 pounds on 90 pounds per square inch air pressure at the air inlet. Normal operating air pressure range is 90 to 120 pounds per square inch at the inlet. The G-704 riveter, equipped with any of the three pulling heads listed, will install all 1/8-, 5/32, and 3/16-inch-diameter CherryMAX rivets in all materials, head styles, and grip lengths.

Pulling Heads

Any of the four pulling heads shown in Figure 6-36 will install all 1/8-, 5/32-, and 3/16-inch-diameter CherryMAX rivets in all materials, head styles, and grip lengths. Their overall reach can be extended by using one of the 704A12 extensions identified below in discussion of extensions.

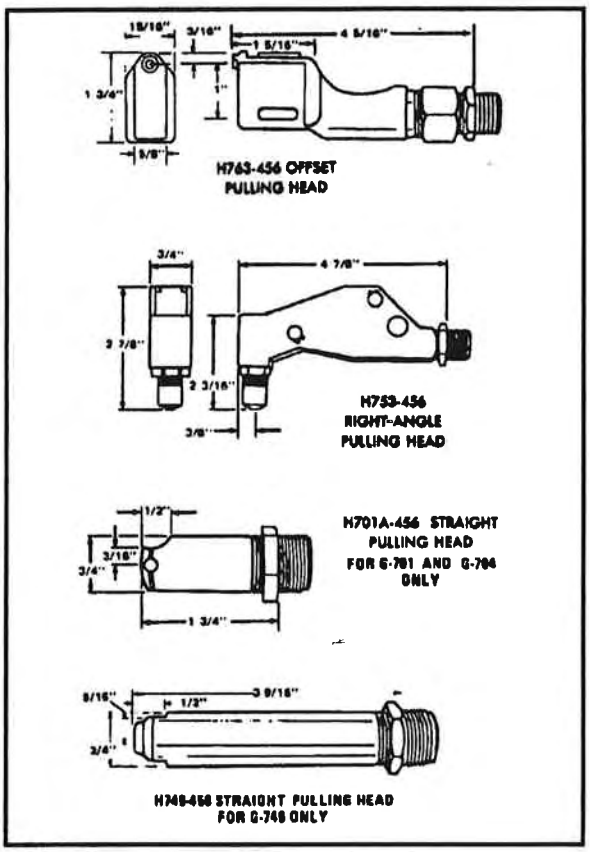

Figure 6-36. Pulling heads (CherryMAX rivets)

Gages

See Figure 6-37. The 269C3 grip gage (A) is a simple, self-explanatory gage for determining material thickness and proper rivet grip length. The T-172 rivet hole-size gage (B) is a precision-ground, go/no-go gage used to check holes drilled for CherryMAX rivets. It comes in both nominal and oversize rivet diameters.

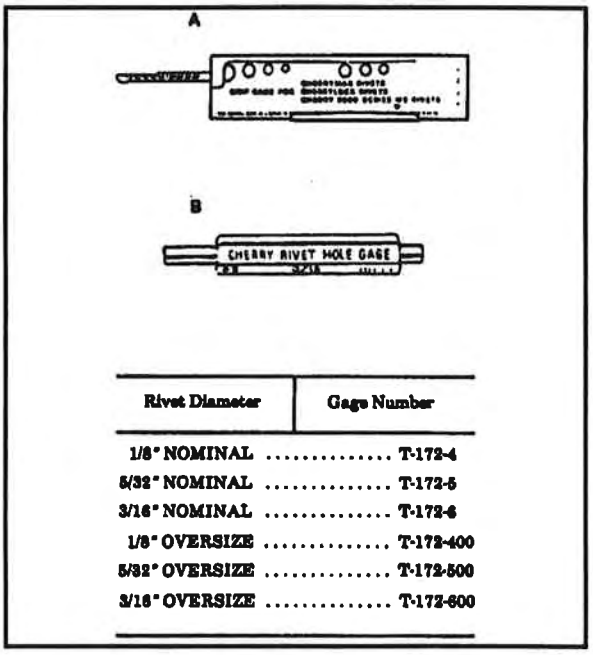

Rivet Diameter	Gage Number
1/8" NOMINAL	T-172-4
5/32" NOMINAL	T-172-5
3/16" NOMINAL	T-172-6
1/8" OVERSIZE	T-172-400
5/32" OVERSIZE	T-172-500
3/16" OVERSIZE	T-172-600

Figure 6-37. Gages (CherryMAX rivets)

Adapters

See Figure 6-38. The 704A6 adapter (A) fits either the G-701 or G-704 CherryMAX riveter to permit the use of H9040 pulling heads for installation of MS-type blind rivets. The 704A9 adapter (B) fits either

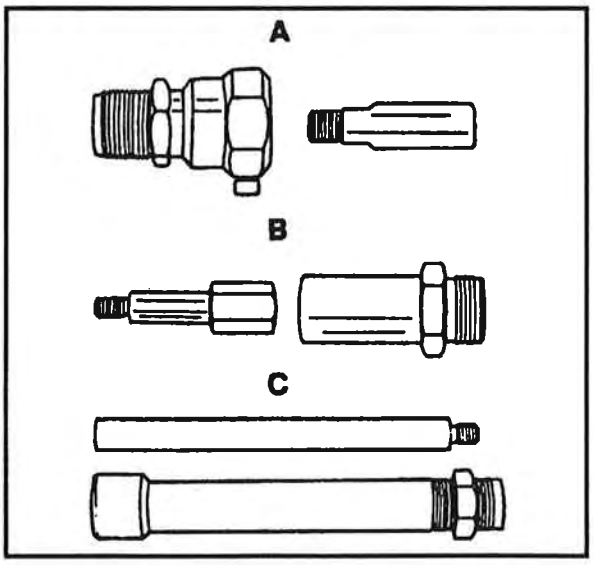

Figure 6-38. Adapters (CherryMAX rivets)

Downloaded from http://www.everyspec.com

type blind rivets. The 704A9 adapter (B) fits either the G-701 or G-704 CherryMAX riveter to permit the use of H9015 pulling heads for installation of MS-type blind rivets.

704A12 extensions (C) help reach many restricted installation areas by increasing the overall length of the pulling head. They fit directly on the G-701, G-704, or G-749 CherryMAX riveter and will accept any of the CherryMAX pulling heads shown in Figure 6-36 above. Four extension lengths are offered:

- 704A12-2 (extends the pulling head 2 inches).
- 704A12-4 (4 inches).
- 704A12-6 (6 inches).
- 704A12-12 (12 inches).

Stem Catcher Bag

The 670A20 stem catcher bag (Figure 6-39) is a convenient accessory that helps eliminate litter on the shop floor. A plastic bag equipped with a heavy-duty zipper, the 670A20 snaps over the stem deflector of either the G-701 or the G-704 CherryMAX riveter to catch the spin rivet stems as they are ejected from the rear of the riveter head.

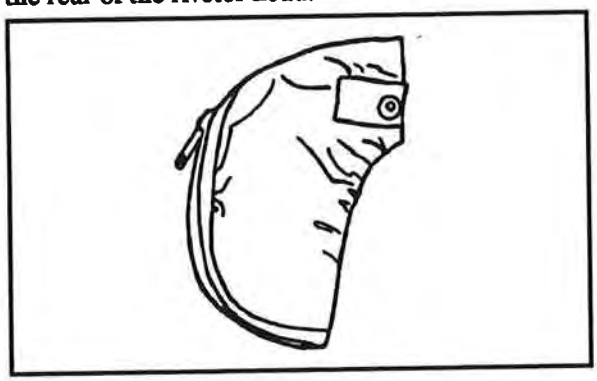

Figure 6-39. Stem catcher bag

700A77 Air Bleeder

To keep CherryMAX hydraulic tools operating at peak efficiency, the hydraulic system must be kept full of fluid and free of air. Based on the same principle used in bleeding the hydraulic brake system of an automobile, the 700A77 Cherry air bleeder will quickly and easily remove all air and ensure the complete filling of the tool with hydraulic fluid. The air bleeder may be used in the tool crib or right on the production line because it requires only a few minutes to perform this vital function. The air bleeder is a small item that does a big job: it prevents downtime.

Service Kits

An assortment of O-rings, seals, screws, washers, and gaskets is available in kit form for each Cherry power tool. Have these kits on hand for tools being serviced to avoid unnecessary downtime. The G-701 tool uses the 6701KS service kit; the G-704, the G704KS kit.

Special Assembly Tools

To completely dismantle and reassemble Cherry hydraulic tools, use the special wrenches designed for that purpose (Figure 6-40).

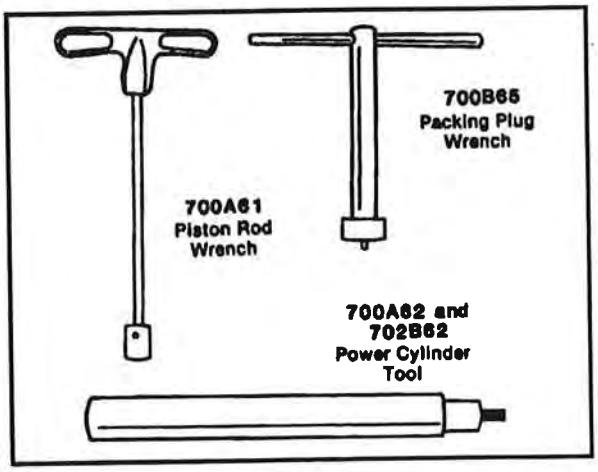

Figure 6-40. Special assembly tools

Hydro-Shift Riveters

Existing Cherrylock hydro-shift riveters G-700 (1/8-inch rivets only), G-784, and G-684 (Figure 6-41) may be used "as is" to install CherryMAX rivets by employing an H680B200 pulling head. By using a 680B205 adapter, either the H763-456 CherryMAX offset pulling head or the H753-456 right angle head will also fit hydro-shift tools. All hydro-shift riveters eject the rivet stem from the front of the head.

Conversion Kits

Conversion kits contain all the necessary parts for conversion and include an H701A-456 CherryMAX pulling head. To convert Cherrylock hydro-shift riveters to the CherryMAX rear ejection configuration, select the appropriate conversion kit, using the formulas below:

CHERRYLOCK RIVETER	+	CONVERSION KIT	=	CHERRYMAX RIVETER
G-700		704A40		G-704
G-705		704A41		G-704

Downloaded from http://www.everyspec.com

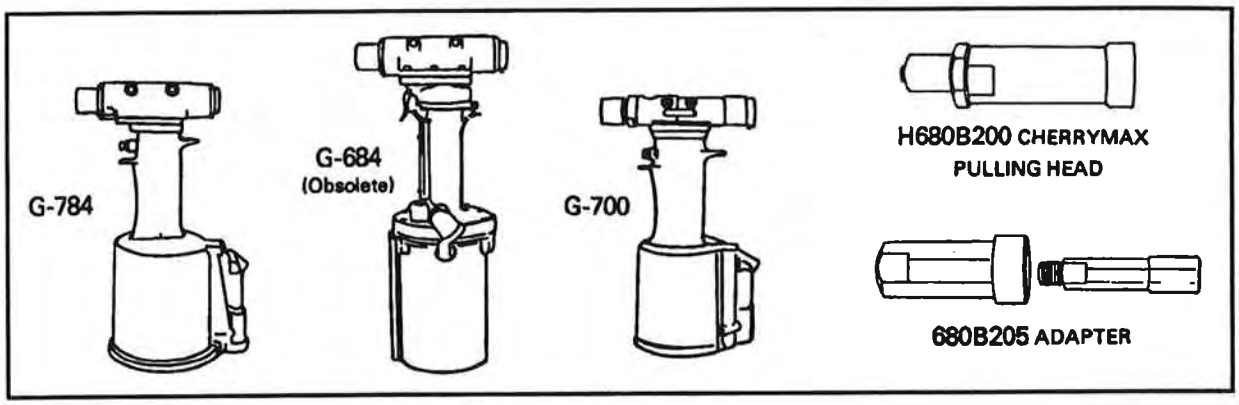

Figure 6-41. Cherrylock hydro-shift riveters

MS-Type Riveters

Any existing MS-blind riveter with sufficient stroke and power will install CherryMAX rivets when equipped with the proper pulling head. Figure 6-42 shows typical examples of existing Cherry MS-type riveters together with recommended pulling heads. Certain models of non-cherry riveters may also be used to install CherryMAX.

The Cherry G-715 MS-type riveter may also be converted to the new CherryMAX rear ejection configuration by using the 70A401 conversion kit. This kit contains all the necessary parts for conversion and includes an H701A-456 CherryMAX pulling head.

Tool Capacity Chart

The tool and pulling head combination shown in Table 6-54 will pull the rivet diameters (all head

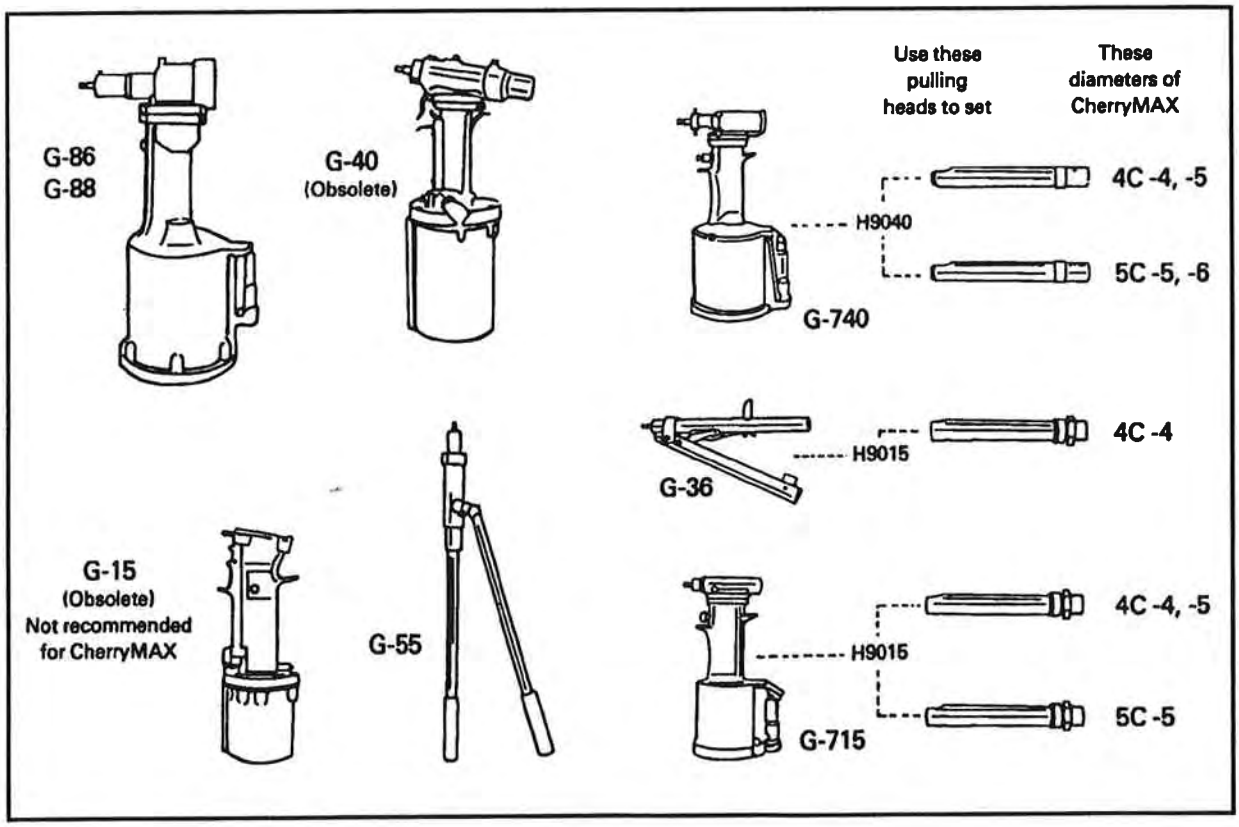

Figure 6-42. MS-type riveters

Downloaded from http://www.everyspec.com

Table 6-54. Tool capacity chart

TYPE OF TOOL	CHERRY RIVETER MODEL	PULLING HEAD	ALL GRIP LENGTHS					
			NOM RIVET DIA			O/S RIVET DIA		
			–4	–5	–6	–4	–5	–6
CHERRYMAX	G-27	--						
	G-701	H701A-456						
	G-704	H701A-456						
	G-749	H749-456						
CHERRYLOCK	G-700	H680B200						
	G-784	H680B200						
	G-684 (OBSOLETE)	H680B200						
MS-TYPE RIVETER	G-36	H9015-3C						
		H9015-4C						
	G-55	H9040-4C						
		H9040-5C						
	G-740	H9040-4C						
		H9040-5C						
	G-40 (OBSOLETE)	H9040-4C						
		H9040-5C						
	G-715	H9015-3C						
		H9015-4C						
		H9015-5C						
	G-86	H9040-4C						
	G-89	H9040-5C						

Downloaded from http://www.everyspec.com

styles) indicated by the shaded area in all grip lengths of CherryMAX rivets.

CHERRYMAX INSTALLATION

Recommended drill and hole sizes and countersink diameter are limits given in Tables 6-55 and 6-56. Install CherryMAX rivets as follows (Figure 6-43):

- Prepare the hole. Accurate countersinking is important to the structural integrity of a flush-riveted joint. Standard countersinking procedures used with solid rivets also apply to CherryMAX rivets. However, the countersink pilot should be no more than 0.001 inch smaller than the hole diameter. A pilot that is greatly undersize will produce countersinks that are not concentric with the hole. This creates head gap problems and countersinks whose axes are not in line with the axes of the drilled holes. This causes "cocked" rivet heads (A).

  Normal dimpling procedures stretch and enlarge the pilot holes in thin sheet applications. The sheets (as dimpled) provide only sharp edges within the hole. To overcome the problems inherent in this type of application, first prepare the dimple with a hole size that will allow for subsequent reaming. Then ream the hole to the dimensions specified for the size of rivet being installed (B). The CherryMAX is especially recommended for this application.

  All drilling operations cause burrs to form on each end of the hole being drilled as well as between the sheets. Whenever possible, remove all burrs (C). Do not remove edge of the hole on the blind side of the sheet because this will affect clamp-up. CherryMAX rivets can compensate for minor burrs remaining on the sheets. When using a drill or center reamer to remove burrs, take care to remove only the burr. Do not countersink the sheets because this may materially affect the strength of the riveted joint, especially with respect to the blind sheet (D).
- Place the rivet in the hole. The holes in the sheets to be fastened must be the correct size, and they must be aligned properly. Do not force the rivet into the hole (E).
- Place the pulling head on the rivet stem. Hold the riveter and pulling head in line with the axis of the rivet. Press firmly against the head of the rivet (F).

NOTE: Hold the riveter in line with the rivet as accurately as possible; apply a steady, firm pressure and pull the trigger. The rivet clamping action will pull the sheets together, seat the rivet head, and break the stem flush with the head of the rivet.

- Shave the rivet. Normal shop practice will result in countersunk rivets that are essentially flush with the aircraft skin, and further secondary operations are not usually necessary (G).

  When perfect aerodynamic flushness is required, the sheet should be countersunk so that the rivet heads will protrude and subsequent shaving will produce complete aerodynamic flushness. Shown below are the recommended countersink diameters to be used for shaving:

RIVET DIAMETER	RECOMMENDED COUNTERSINK DIAMETER +.005, -.000	APPROXIMATE PROTRUSION OF RIVET HEAD ABOVE SHEET
1/16	.214"	.005"
5/32	.272"	.006"
3/16	.335"	.007"

Table 6-55. Drilling dimensions

DRILLING DIMENSIONS			
NOMINAL DIAMETER CHERRYMAX			
RIVET DIA	DRILL SIZE	MINIMUM	MAXIMUM
1/8	#30	.129	.132
5/32	#20	.160	.164
3/16	#10	.192	.196
OVERSIZE DIAMETER CHERRYMAX			
1/8	#27	.143	.146
5/32	#16	.176	.180
3/16	#5	.205	.209

Table 6-56. Countersinking dimensions (100°)

COUNTERSINKING DIMENSIONS (100°)

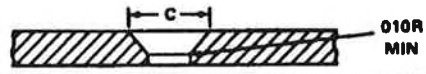

RIVET DIA	C MINIMUM	C MAXIMUM
1/8	.222	.228
5/32	.283	.289
3/16	.350	.356

Downloaded from http://www.everyspec.com

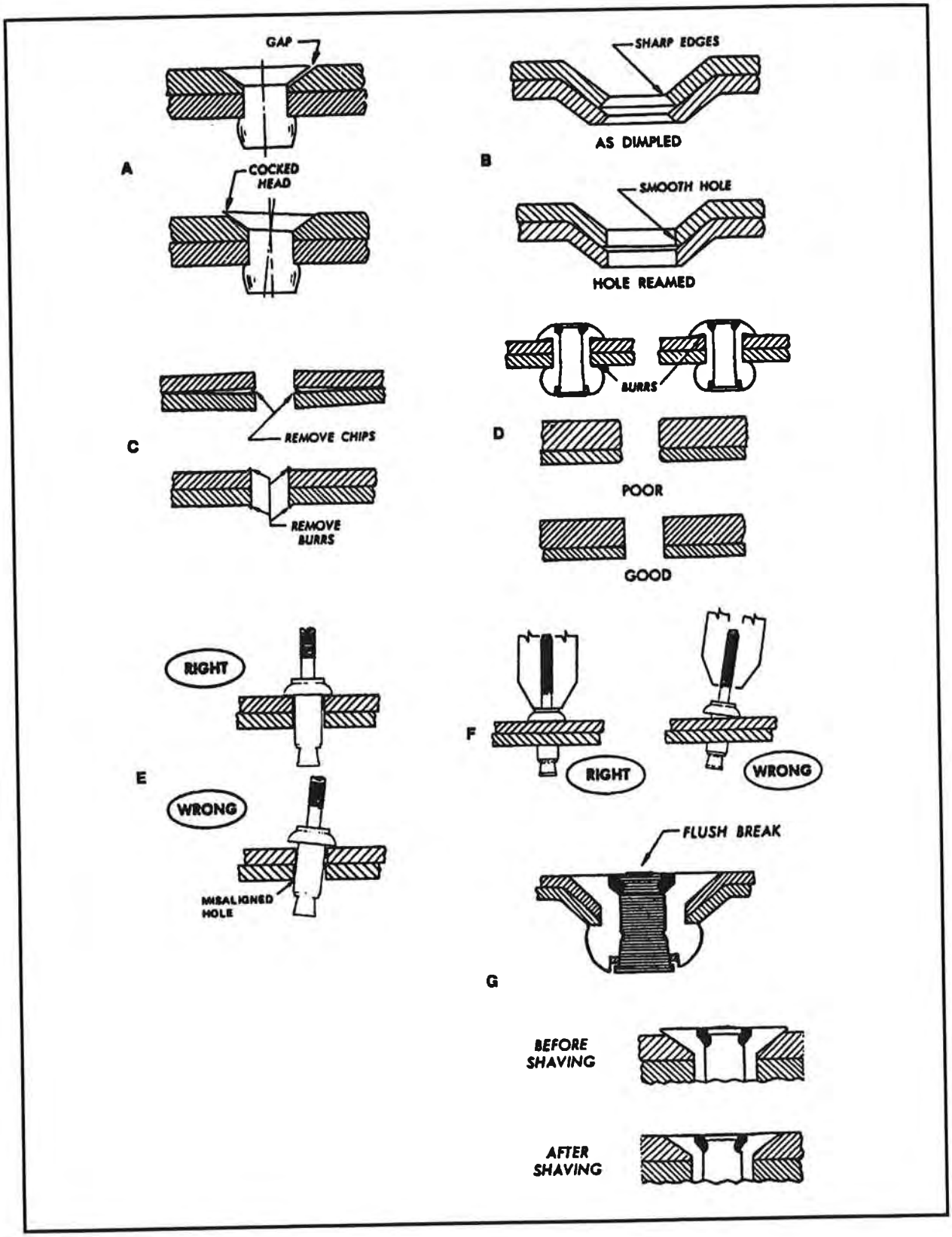

Figure 6-43. Installation of CherryMAX rivets

Downloaded from http://www.everyspec.com

CHERRYMAX INSPECTION

Installation of CherryMAX rivets can be inspected from the visible side of the work (Figure 6-44).

Stem and Collar Flushness

If the rivet stem and collar are flush within the limits described, it is safe to assume that a satisfactory blind head and lock has been formed. CherryMAX rivets are self-inspecting (A).

Typical Blind Head

If the grip marking indicates that the rivet has been installed in the proper grip and the stem and collar are flush within prescribed limits, blind heads typical of those illustrated will be obtained (B).

TROUBLESHOOTING (CHERRYMAX)

Correct installation of CherryMAX rivets requires that the instructions contained in this manual for hole preparation, tools, and installation techniques be carefully followed. Pulling heads and jaws must be clean and free from chips, burrs, and dry sealant. They must be in proper adjustment and mechanical repair. Problems can be caused by the installer, the tools, or the application. The following troubleshooting tips list possible causes for each problem and offer solutions (Figure 6-45):

- Rivet stem breaks high. Rivet stem break notch pulls higher than the 0.010 maximum allowed above rivet head (A):
  - Rivet is installed in oversized hole—use larger diameter rivet or drill smaller holes.
- Rivet stem breaks low (collar does not set). Rivet stem breaks well above rivet head and collar does not set (B):
  - Rivet is installed in undersize hole—drill out holes to proper size.
  - Rivet is installed in over-maximum grip—use longer grip rivet.
  - Holes are slanted or misaligned—take more care to obtain holes that are properly aligned and normal to the sheets.
  - Installer "cocks" pulling head—take more care to align tool and keep arm flexible to allow rivet to align itself.
- Head does not seat properly. Rivet head does not seat properly against top sheet or in countersink (C):
  - Holes are slanted or misaligned—take more care to obtain holes that are properly aligned and normal to the sheets.
  - Countersink is not concentric with hole—use countersink pilot that is close to hole size.
  - Installer "cocks" pulling head and rivet head during installation—installer should hold tool and pulling head in a flexible manner so that rivet can clamp head down properly.
- Rivet stem breaks even with top of rivet head, but rivet can be rotated (turned in hole by hand).
  - Rivet is too long (grip length is correct)—remove and replace proper rivet.

RIVET REMOVAL (CHERRYMAX)

If it is necessary to remove an installed CherryMAX rivet, the following procedures are recommended (Figure 6-46):

- Use a small center drill to provide a guide for a larger drill on top of the rivet stem, and drill away from the upper portion of the stem to destroy the lock (A).
- Drive out the rivet stem, using a tapered steel drift pin or a spent stem (B). Pry out the locking collar.
- Drill nearly through the head of the rivet, using a drill the same size as the rivet shank (C).
- Break off the rivet head, using a drift pin as a pry (D).
- Drive out the remaining rivet shank with a pin having a diameter equal to the rivet shank (E)

CAUTION

Do not drill completely through the rivet sleeve to remove a rivet because this will tend to enlarge the hole.

Downloaded from http://www.everyspec.com

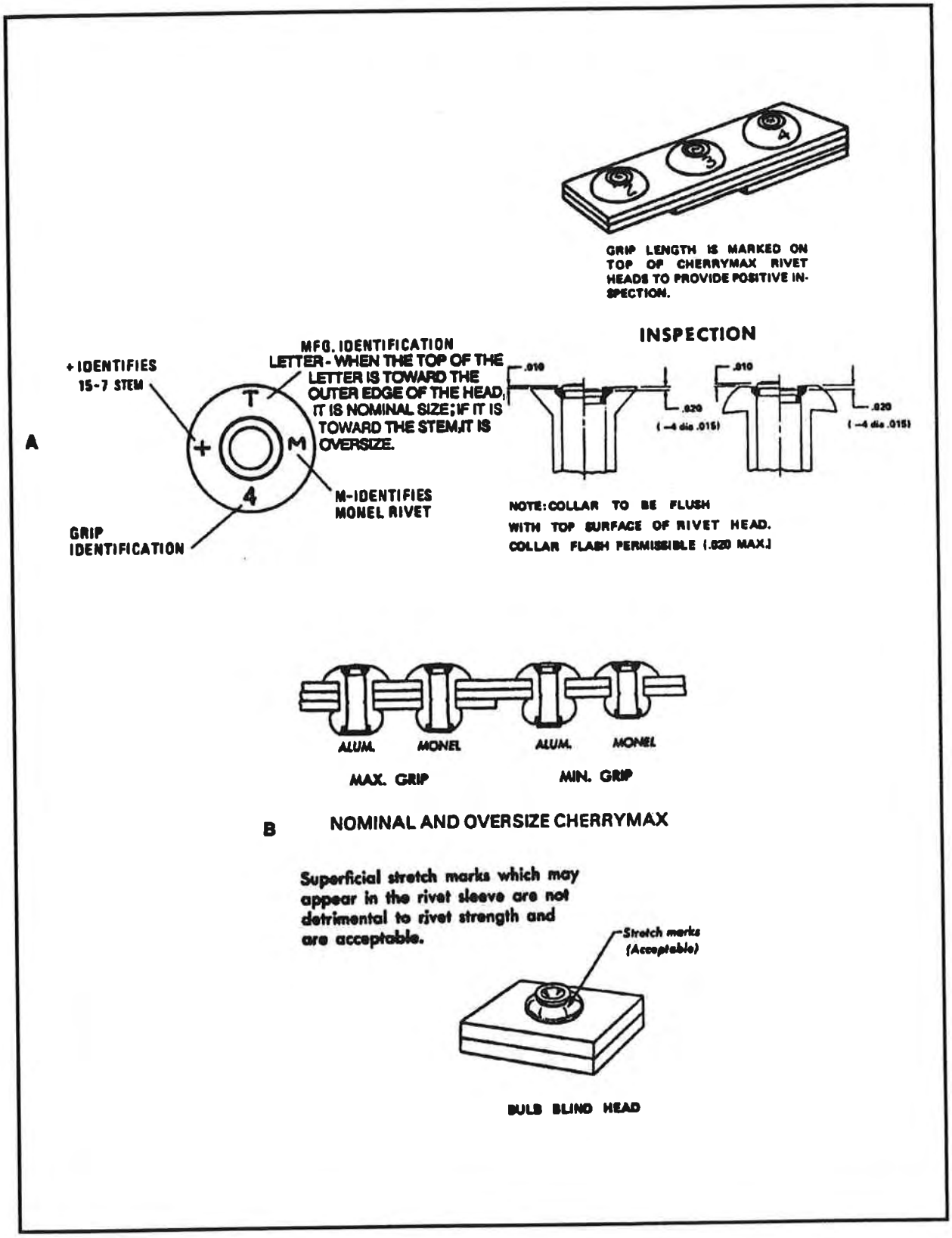

Figure 6-44. CherryMAX inspection

Downloaded from http://www.everyspec.com

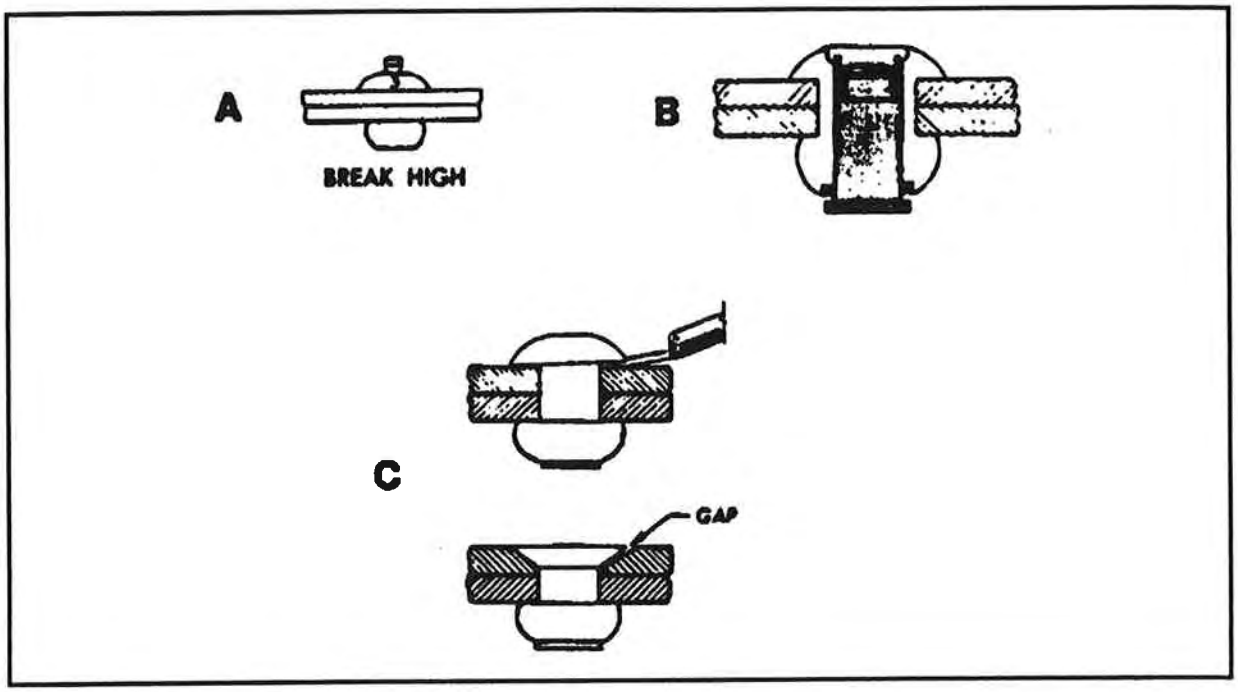

Figure 6-45. Troubleshooting

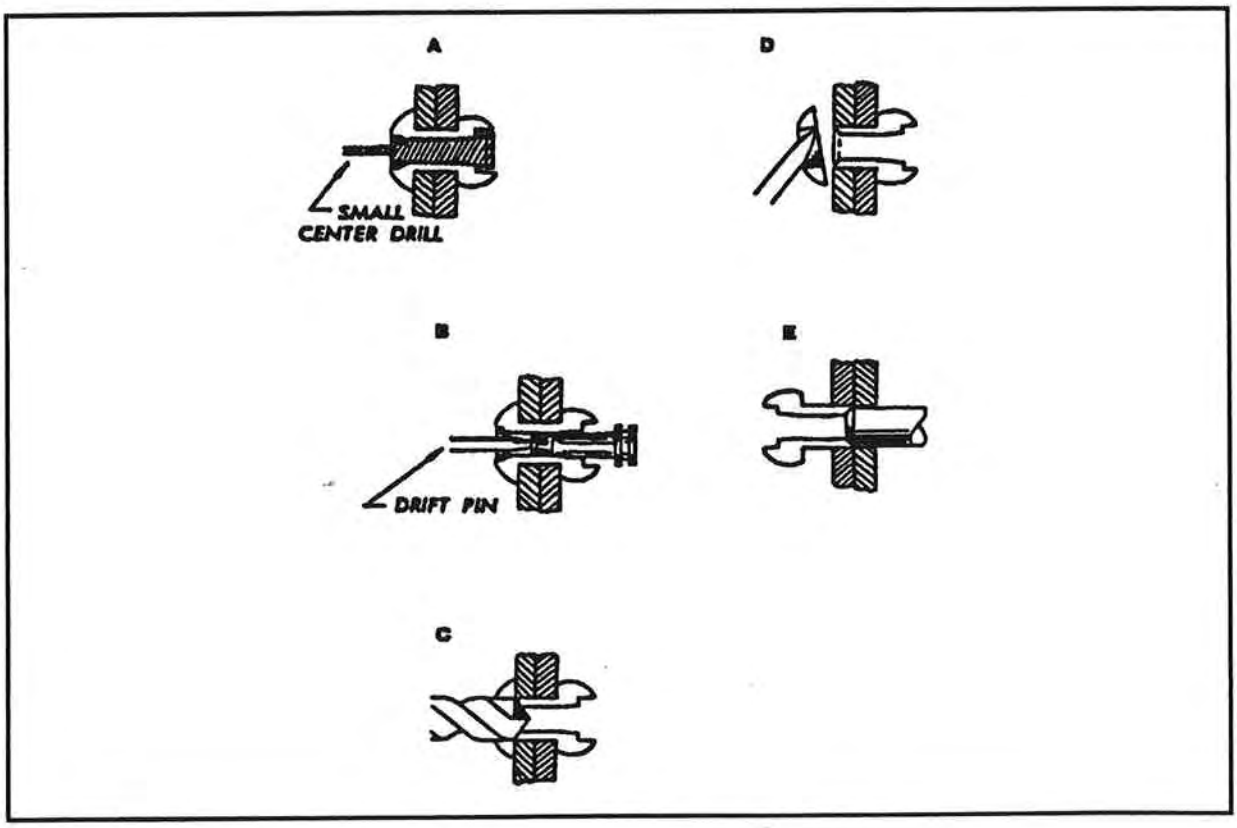

Figure 6-46. Rivet removal

Downloaded from http://www.everyspec.com

RIVNUTS

Rivnuts are internally threaded and counterbored tubular rivets that can be installed in blind applications. They are used in locations where bucking access is impossible, such as the attachment of deicing boots to leading edges. Rivnuts are made of 6053 aluminum alloy or steel in two head styles and ends: flat and countersunk heads with open or closed ends (Figure 6-47).

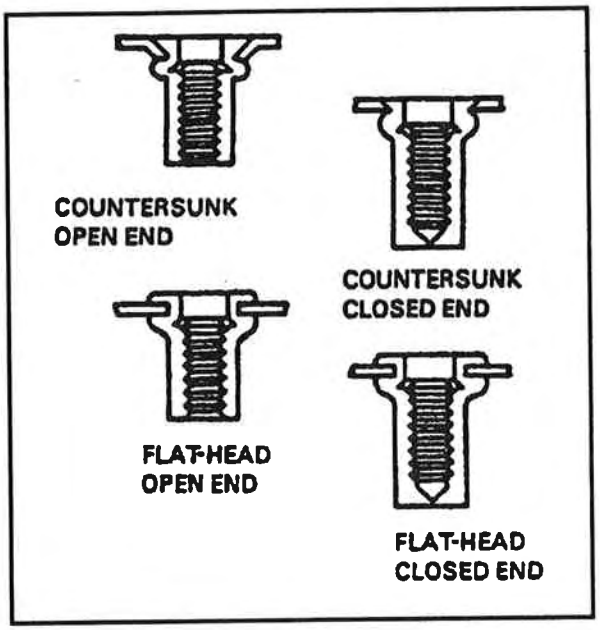

Figure 6-47. Types of rivet head styles

All Rivnut head styles are available in 4-40, 6-32, 8-32, 10-32, 1/4-20, and 5/16-18 sizes, which represent the machine screw size of the thread inside the Rivnut. Keyed Rivnuts for use as nut plates are available for the 6-32, 8-32, and 10-32 thread sizes. A Rivnut with a part number ending in 1 or 6 has a 100° countersunk head. Rivnut numbers ending in 0 or 5 indicate a flat head. The letters and numbers used in a Rivnut part number are as follows:

A = aluminum

S = steel

First number = machine screw size of thread

A dash = open end keyless

B = closed end keyless

K = open end with key

KB = closed end with key

Last number = maximum grip in thousandths of an inch

Keyed Rivnuts are used as nut plates. Rivnuts without keys are used for straight blind riveting where no torque loads are imposed. Flat-head rivnuts are used when head thickness will not interfere with the surface contour of the material. If flush installations are required, countersunk-head Rivnuts are used. Closed-end Rivnuts are used when a sealed installation is required.

Selection

Factors to consider when selecting Rivnuts are—

- Material.
- Grip range.
- Style of head.
- Type of end.
- Presence or absence of a key.

A Rivnut should be made of the same metal as the material it is to be used on; that is, aluminum alloy Rivnuts should be used for aluminum material and steel for steel material. When selecting the head style, follow the same rules used for solid-shank rivet applications. Use key-type Rivnuts when machine screws are to be inserted and closed-end Rivnuts when sealed installations are required.

The most important consideration is proper grip length. The purpose of installing a Rivnut is to produce an ideal bulge on the blind side of the work without distorting the threads inside the Rivnut. Grip is the overall thickness of the material at the hole where the Rivnut is to be installed. For flathead or countersunk-head Rivnuts installed in machine-countersunk or plain holes, grip should equal metal thickness. When countersunk-head Rivnuts are installed in dimpled or press countersunk holes, grip is the measurement from the top surface of the metal to the underside of the dimpled hole. The maximum grip of a Rivnut is the greatest material thickness in which a specific Rivnut can properly be installed. Minimum grip is the least thickness in which a specific Rivnut can be installed. The grip range of a Rivnut equals the variation between maximum and minimum thicknesses. It can be determined from its part number; for example, a 6-120 Rivnut has a maximum grip of 0.120 inch. The minimum grip would equal the maximum grip of the preceding Rivnut in

Downloaded from http://www.everyspec.com

the series (6-75), or 0.075 inch. Figure 6-48 illustrates how Rivnut grip length is determined.

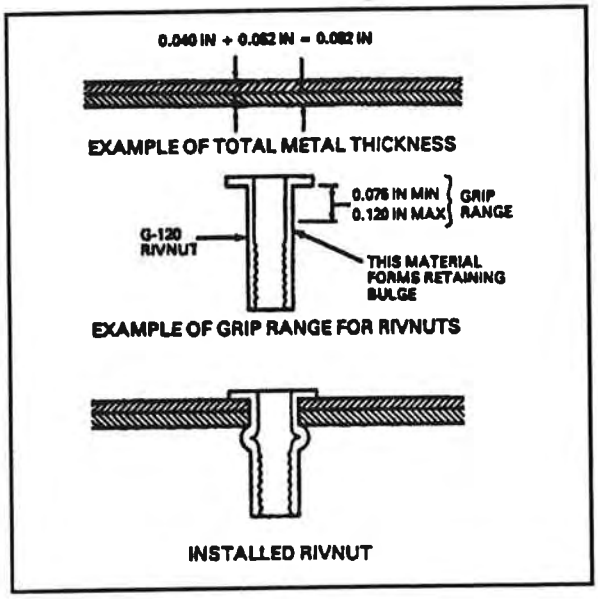

Figure 6-48. Determining Rivnut grip length

Installation

Tools

Installation tools include hand-operated and pnuematic headers and a key-seating tool (Figure 6-49). The hand-operated and pneumatic headers have a stud onto which the Rivnut is threaded until its head rests against the anvil of the header. The key-seating tool is used for cutting keyways in sheet metal. If a key seating tool cannot be used because the metal is too thick, use a small round file instead. The D-100 Cherry hand hydraulic riveter also installs Rivnuts.

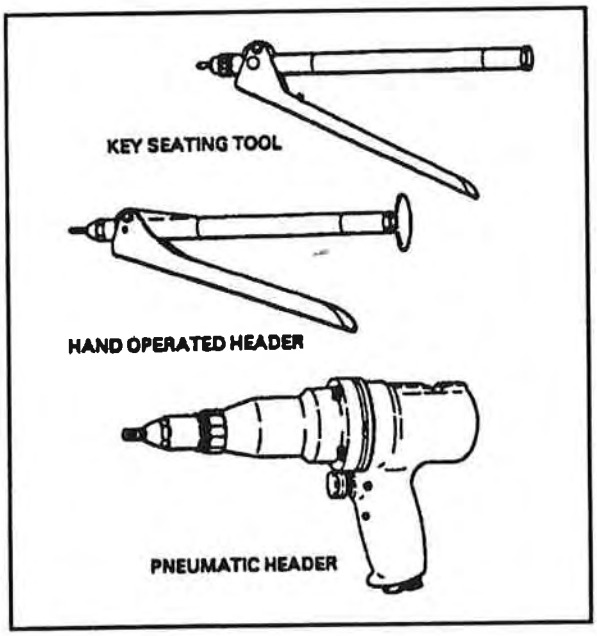

Figure 6-49. Rivnut installation tool

Procedures

If keyed Rivnuts are used, cut the keyway after the hole has been reamed. To cut the keyway, hold the keyway setter at a 90° angle to the work. Cut the keyway on the side of the hole away from the edges of the sheet, especially when using the Rivnut on the outside row. Operate the keyway setter by inserting it in the hole and squeezing the handles. Due to their limited strength, Rivnuts are rarely installed by manufacturers. For metal thicker than the minumum grip length of the first of a series of rivets, use the machine countersink; for metal thinner than the minimum grip length of the first rivet, use the dimpling process. Do not use the countersunk Rivnut unless the metal is thick enough for machine countersinking or unless the underside is accessible for dimpling. For a countersunk Rivnut, the sheets to be joined can usually be machine-countersunk. This method is preferable because the bearing surface in a dimpled hole in one sheet of average gage will normally occupy the entire gripping surface of the Rivnut. This limits its grip range to that of an anchored nut only. Aside from the countersinking operation, the procedure for installing a flush Rivnut is the same as that for a flathead Rivnut.

When installing Rivnuts, check the threaded stud of the heading tool to ensure that it is free from burrs and chips from the previous installation. Then screw the Rivnut on the stud until the head touches the anvil. Insert the Rivnut in the hole (with the key inserted in the keyway), and hold the heading tool at right angles to the work. Press the head of the Rivnut tightly against the sheet while slowly squeezing the handles of the heading tool together until the Rivnut starts to bulb. Then release the handles and screw the stud further into the Rivnut. This prevents stripping the threads before the Rivnut is properly installed. Continue squeezing the handles together and releasing them until Rivnut installation is complete. Turn the crank counterclockwise to remove the installation crank stud from the Rivnut.

The action of the installation crank draws the Rivnut against the anvil, causing a bulge to form in the

Downloaded from http://www.everyspec.com

counterbored portion of the Rivnut on the blind side of the work. This bulge is comparable to the shop head on a solid-shank rivet. The amount of squeeze required to install the Rivnut properly is best determined by practice. Be careful to avoid stripping the Rivnut thread.

Installation of a Rivnut is not complete unless it is plugged, either with one of the plugs designed for that purpose or with a screw. A Rivnut does not develop its full strength when left hollow. Any screw of proper thread size and suitable head style can be used in a Rivnut. Screws and plugs for deicing equipment are available in 6-32 thread size only.

Removal

Rivnuts can be removed using the same size drill used for the original hole. Because the Rivnut is hollow, the drill is guided throughout the drilling operation. The same size Rivnut can be installed in the same hole if desired.

HI-SHEAR RIVETS

Hi-Shear rivets have two parts, a pin and a collar. They are essentially threadless bolts (Figure 6-50). Hi-Shear rivets are classified as special rivets but are not of the blind type. Access to both sides of the material is required to install these rivets. Hi-Shear rivets have the same shear strength as bolts of equal diameters. They weigh about 40 percent as much as a bolt and require only about one-fifth as much time to install as a bolt, nut, and washer combination. They are about three times stronger than solid-shank rivets. The pin is headed at one end and grooved about the circumference at the other end. The collar is swaged onto the grooved end to effect a firm, tight fit. Hi-Shear rivets come in a variety of materials. They are used only in shear applications and are never used where grip length is less than shank diameter.

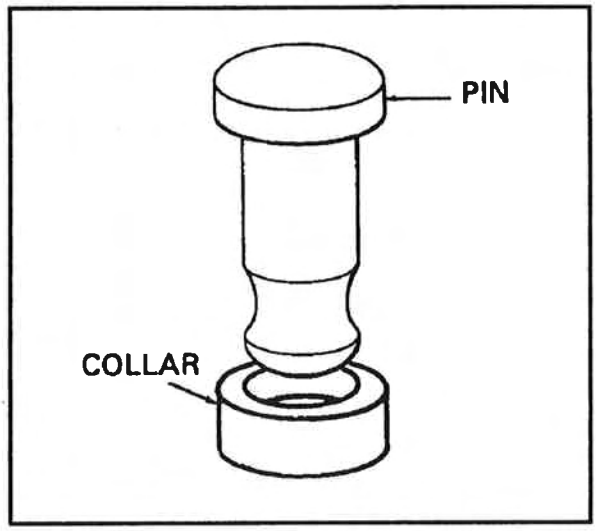

Figure 6-50. Hi-Shear (pin) rivet

Installation

Tools

Hi-Shear rivets are installed with a Hi-Shear installation set. Use the standard bucking bars and pneumatic guns or squeezers described in Section I of this chapter. The Hi-Shear set forms the collar over the grooved end of the pin, trims excess material from the collar, and discharges it through a discharge port. Each shank diameter requires a different size set. Special Hi-Shear reverse bucking bars are used for driving Hi-Shear rivets from the head end.

Procedures

Prepare holes for Hi-Shear rivets as shown in Table 6-50 for interference-fit applications. It may be necessary to spot-face the area under the head of the pin so that it can fit tightly against the material when the surface is uneven. The spot-faced area should be 1/16 inch larger in diameter than the head diameter. Determine the correct grip length by inserting a pin of the correct diameter in the drilled hole and checking the straight portion on the shank. This portion should not extend more than 1/16 inch through the material. Hi-Shear rivets may be driven from either end. When driving from the collar end, refer to Figure 6-51. If reverse riveting (driving from the head end) is required, proceed as follows:

- Insert pin in rivet hole.
- Slip collar over pin.
- Place correct Hi-Shear rivet set in special Hi-Shear bucking bar, and place rivet set against collar of rivet.
- Apply pressure against the rivet head with a flush rivet set and pneumatic rivet gun until the collar is formed and excess collar material is trimmed off.

Inspection and Removal

Inspect Hi-Shear rivets on both sides of the material (Figure 6-52). The head of the rivet should not be marred. It should fit tightly against the material.

Downloaded from http://www.everyspec.com

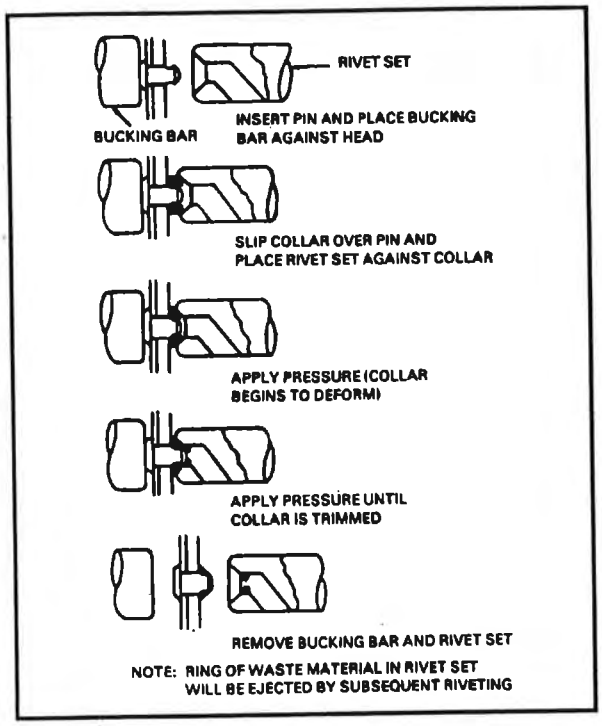

Figure 6-51. Drive Hi-Shear rivets from collar end

Any of the following procedures may be used for removing Hi-Shear rivets:

- Apply a narrow, cold chisel to the slope of the collar and a bucking bar to the opposite side of the collar. Hit the chisel with a medium-weight hammer and cut the collar. Pry the collar off and punch out the pin.
- Apply drill-out bushing to the collar end of the rivet. Drill end of rivet off and punch out pin.
- Apply drill-out bushing to head of rivet. Drill through the head and then punch out pin.
- Apply a punch (installed on a rivet squeezer) to collar end of pin. Punch out pin.
- Apply a hollow mill cutter (installed in drill motor) to collar. Grind collar to loosen and punch out pin.

Section III. Special-Purpose Fasteners

HUCK LOCK BOLTS

The Huck lock bolt combines the features of a high-strength bolt and a rivet. This bolt is generally used in wing-splice, landing-gear, and fuel-cell fittings in longerons, beams, skin-splice plates, and other major structural attachments. The Huck lock bolt is easier and quicker to install than a conventional rivet or bolt, and it eliminates the use of lock washers, cotter pins, and special nuts. Like the rivet, a lock bolt requires a pneumatic gun or pull gun for installation and, when installed, is rigidly and permanently locked in place.

Three types of Huck lock bolts are commonly used: pull, stump, and blind (Figure 6-53). Pull- and stump-type lock bolts are available in 3/16-, 1/4-, 5/16-, and 3/8-inch diameters with modified brazier, pan, and countersunk heads. Blind lock bolts are available in oversize 1/4- and 5/16-inch diameters only. Common features of the three types are annular locking grooves on the pin and a locking collar swaged into the pin's lock grooves to lock the pin in tension. The pins of pull- and blind-type lock bolts are extended for pull installation; the extension is provided with pulling grooves and a tension break-off groove.

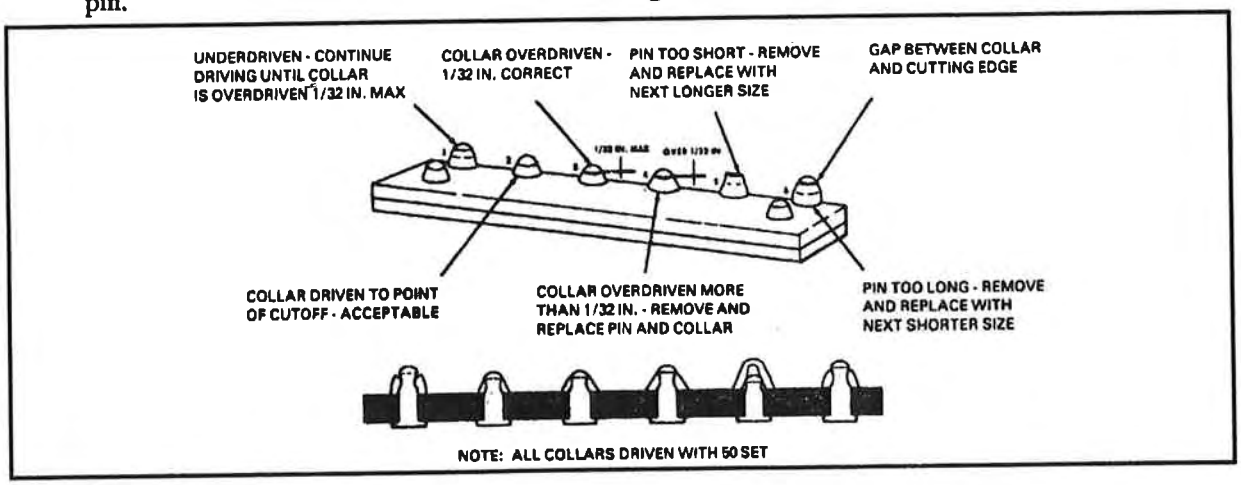

Figure 6-52. Hi-Shear rivet inspection criteria

Downloaded from http://www.everyspec.com

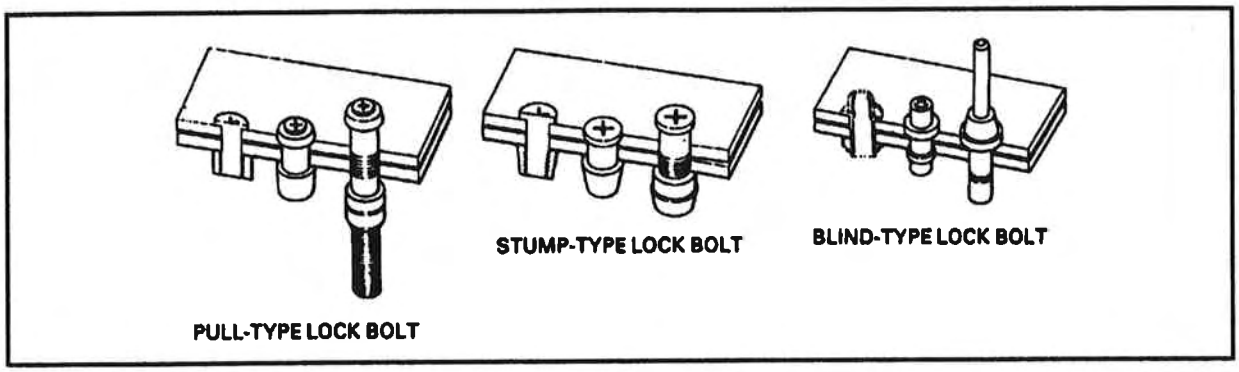

Figure 6-53. Types of lock bolts

Pins of pull- and stump-type lock bolts are made of heat-treated alloy steel or high-strength aluminum alloy. Companion collars are made of aluminum alloy or mild steel. A blind-type lock bolt consists of a heat-treated alloy steel pin, blind sleeve, filler sleeve, mild steel collar, and carbon steel washer.

Alloy steel lock bolts can be used to replace steel Hi-Shear rivets, solid steel rivets, and AN or MS bolts of the same diameter and head type. Aluminum alloy lock bolts can be used to replace 7075-T aluminum alloy Hi-Shear rivets and solid aluminum alloy rivets of the same diameter and to replace steel and 2024-T aluminum alloy bolts of the same diameter. Blind-type lock bolts may be used to replace solid aluminum alloy rivets, stainless steel rivets, and all blind rivets of the same diameter. For shear applications, the blind-type lock bolt may be used to replace aluminum alloy or steel AN and MS bolts and screws and Hi-Shear rivets of the same diameter.

Pull-Type

Pull-type lock bolts are mainly used in aircraft primary and secondary structures. They can be installed very quickly and weigh about half as much as equivalent AN or MS steel bolts and nuts. A special pneumatic pull gun is needed for installing pull-type lock bolts. One operator can install them because bucking is not required.

Stump-Type

Stump-type lock bolts, although they do not have an extended stem with pull grooves, are compatible with pull-type lock bolts. They are used primarily where there is not enough clearance to permit effective installation of pull-type lock bolts. Stump-type bolts are driven with a standard pneumatic riveting gun equipped with a hammer set for swaging the collar onto the pin locking grooves and with a bucking bar.

Blind-Type

Blind-type lock bolts come as a complete unit or assembly. They have exceptional stength and capacity to draw metal together. Blind-type lock bolts are used where only one side of the work is accessible and in general where it is difficult to drive a conventional rivet. Blind-type lock bolts are installed in much the same way as pull-type lock bolts are.

Selection

Determine lock bolt grip range by measuring thickness of the material with a book scale. Take the measurement with the material clamped and include variations due to sheet thickness, primer, and any spaces between the sheets caused by irregularities in contour. Table 6-57 gives the grip range for blind-type lock bolts. Table 6-58 gives the grip range for pull- and stump-type lock bolts.

Part-numbering systems for pull, stump, and blind-type lock bolts are shown in Figures 6-54, 6-55, and 6-56 respectively. Figure 6-57 shows the part-numbering system for lock bolt collars.

Installation

Tools

Rivet pull guns (Figures 6-58 and 6-59) are used to install pull- and blind-type lock bolts. Tools for installing stump-type lock bolts are indicated in Table 6-59.

Procedures

Holes for lock bolts must be round and within the size limits specified in Tables 6-60 and 6-61. All lock bolts come prelubricated from the manufacturer. They must not be degreased if proper driving characteristics are to be maintained.

Downloaded from http://www.everyspec.com

Table 6-57. Grip range for blind-type lock bolts

1/4-inch diameter			5/16-inch diameter		
GRIP NO	GRIP RANGE		GRIP NO	GRIP RANGE	
	Min (in)	Max (in)		Min (in)	Max (in)
1	0.031	0.094	2	0.094	0.156
2	0.094	0.156	3	0.156	0.219
3	0.156	0.219	4	0.219	0.281
4	0.219	0.281	5	0.281	0.344
5	0.281	0.344	6	0.344	0.406
6	0.344	0.406	7	0.406	0.469
7	0.406	0.469	8	0.469	0.531
8	0.469	0.531	9	0.531	0.594
9	0.531	0.594	10	0.594	0.656
10	0.594	0.656	11	0.656	0.718
11	0.656	0.718	12	0.718	0.781
12	0.718	0.781	13	0.781	0.843
13	0.781	0.843	14	0.843	0.906
14	0.843	0.906	15	0.906	0.968
15	0.906	0.968	16	0.968	1.031
16	0.968	1.031	17	1.031	1.094
17	1.031	1.094	18	1.094	1.156
18	1.094	1.156	19	1.156	1.219
19	1.156	1.219	20	1.219	1.281
20	1.219	1.281	21	1.281	1.343
21	1.281	1.343	22	1.343	1.406
22	1.343	1.406	23	1.406	1.469
23	1.406	1.469	24	1.469	1.531
24	1.469	1.531			
25	1.531	1.594			

Downloaded from http://www.everyspec.com

Table 6-58. Grip range for pull- and stump-type lock bolts

GRIP NO	GRIP RANGE	
	Min (in)	Max (in)
1	0.031	0.094
2	0.094	0.156
3	0.156	0.219
4	0.219	0.281
5	0.281	0.344
6	0.344	0.406
7	0.406	0.469
8	0.469	0.531
9	0.531	0.594
10	0.594	0.656
11	0.656	0.718
12	0.718	0.781
13	0.781	0.843
14	0.843	0.906
15	0.906	0.968
16	0.968	1.031
17	1.031	1.094
18	1.094	1.156
19	1.156	1.219
20	1.219	1.281
21	1.281	1.344
22	1.344	1.406
23	1.406	1.469
24	1.469	1.531
25	1.531	1.594
26	1.594	1.656
27	1.656	1.718
28	1.718	1.781
29	1.781	1.843
30	1.843	1.906
31	1.906	1.968
32	1.968	2.031
33	2.031	2.094

Downloaded from http://www.everyspec.com

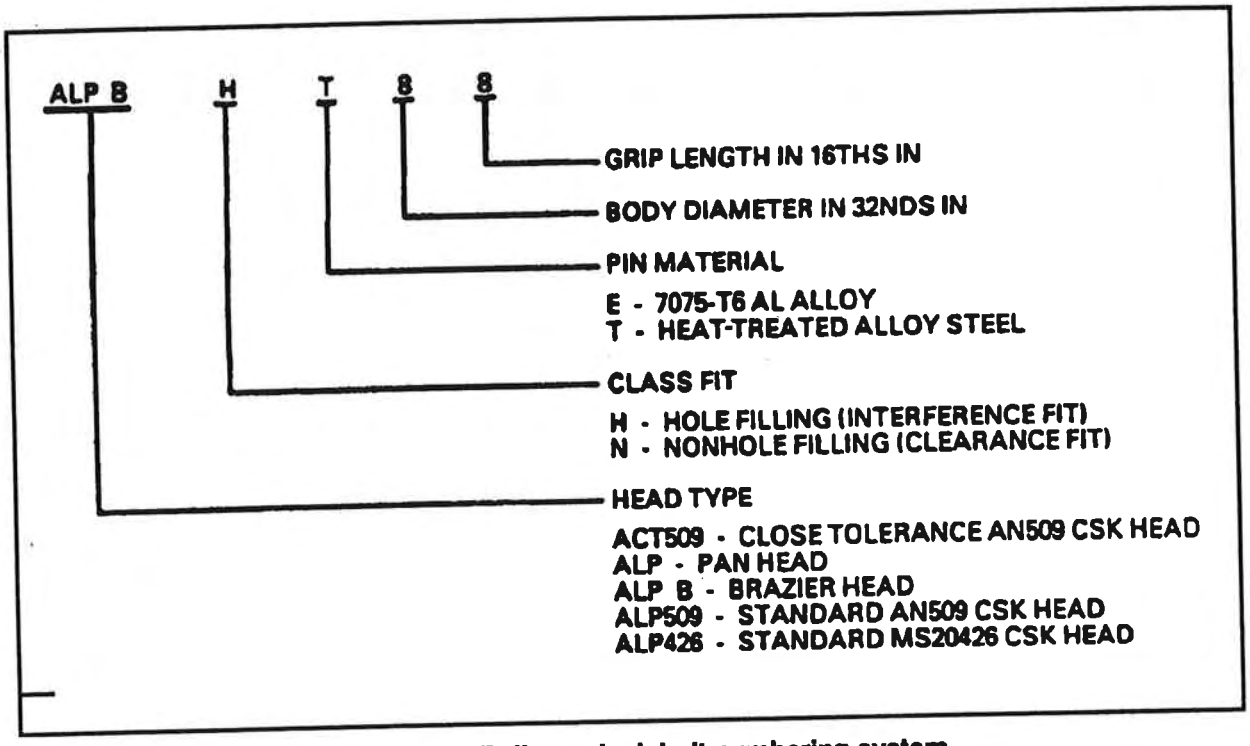

Figure 6-54. Pull-type lock bolt numbering system

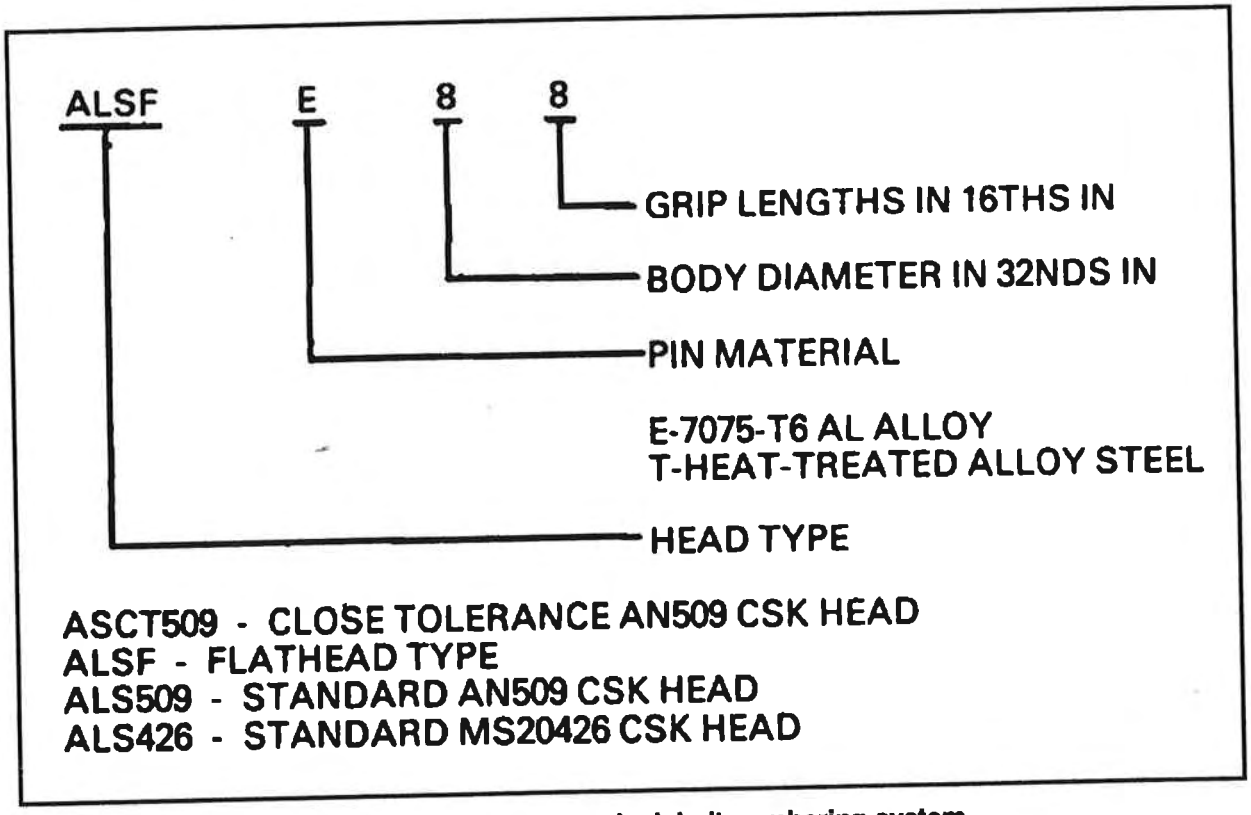

Figure 6-55. Stump-type lock bolt numbering system

Downloaded from http://www.everyspec.com

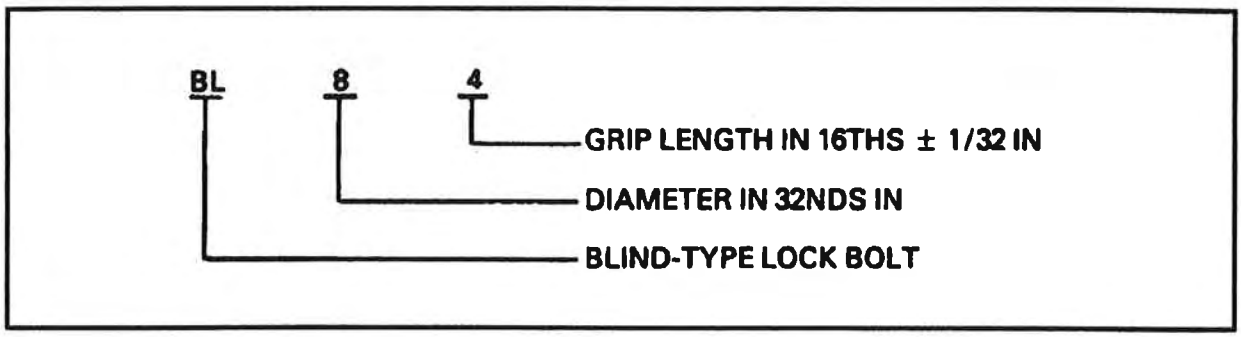

Figure 6-56. Blind-type lock bolt numbering system

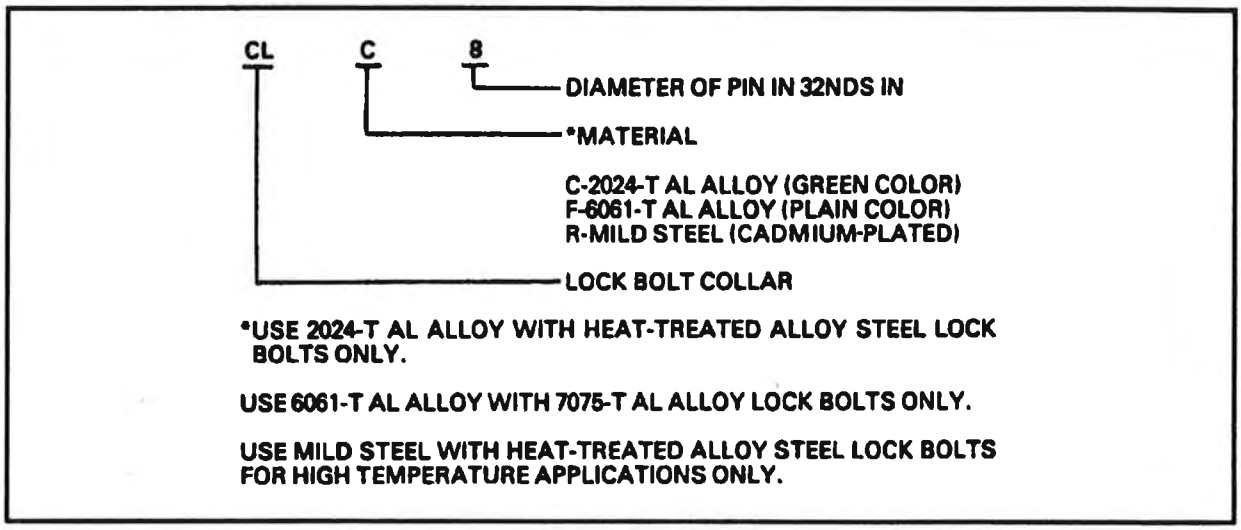

Figure 6-57. Lock bolt collar numbering system

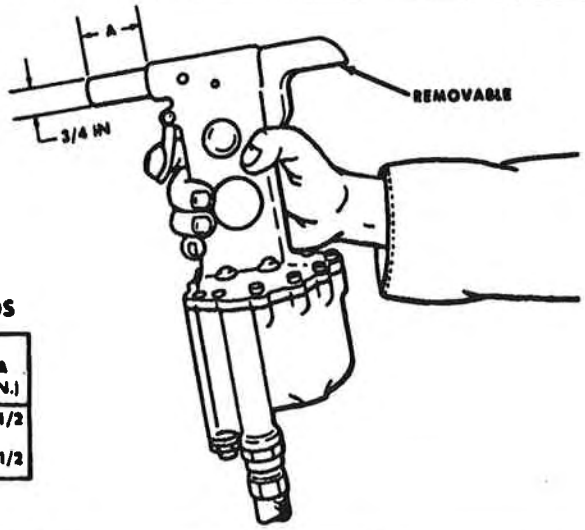

WEIGHT: 8 POUNDS

BLIND	PULL						
LOCKBOLT DIA (IN.)	LOCKBOLT DIA (IN.)	STD. NOSE	A (IN.)	SHORT NOSE	A (IN.)	LONG NOSE	A (IN.)
1/4	3/16	79606	2	79616	1-3/32	79613	3-1/2
	1/4	79608	2	79618	1-3/32	79615	3-1/2

Figure 6-58. CP352 rivet gun for pull- and blind-type aluminum lock bolts

Downloaded from http://www.everyspec.com

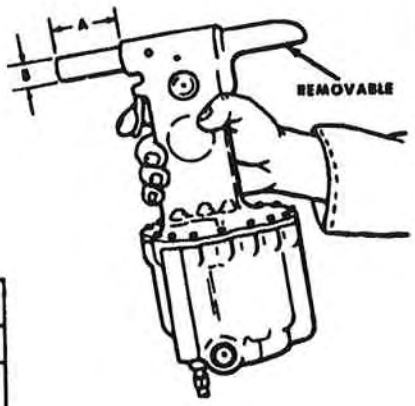

WEIGHT: 11 POUNDS

BLIND	PULL									
LOCKBOLT DIA. (IN)	LOCKBOLT DIA. (IN)	STD. NOSE	A (IN)	B (IN)	LONG NOSE	A (IN)	B (IN)	ADAPTER NOSE	A (IN)	B (IN)
1/4	3/16							79651	2-3/4	3/4
5/16	1/4	79582	2-11/16	1-1/16	79587	4-3/16	1-1/16	79669 87548	3-1/16 1-15/16	3/4 3/4
-	5/16	79584	2-11/16	1-1/16	79589	4-3/16	1-1/16			
-	3/8	79586	2-11/16	1-1/16	79591	4-3/16	1-1/16			

Figure 6-59. CP353 rivet gun for pull- and blind-type steel lock bolts

Table 6-59. Standard installation tools for stump-type lock bolts

Stump-type lock bolt size (in)	Swaging set			Applicable air hammers			
	Nuck part no.	Shank size (in)	Length (in)	CP3X or equal	CP4X or equal	CP5X or equal	CP7X or equal
3/16	915-1-6A	0.401	2⅜	X	X		
¼	915-1-8A	0.401	2⅜	....	....	X	X
5/16	915-1-10A	0.498	3½	..	....	---	X
⅜	915-1-12A	0.498	3½	....	....	---	X

Table 6-60. Drilling procedures for pull- and stump-type lock bolts

	CLEARANCE FIT APPLICATION					INTERFERENCE-FIT APPLICATION				
Bolt dia (in)	Predrill		Drill size		Hole tolerance (in)	Bolt dia (in)	Predrill		Drill size		Hole tolerance (in)
	Drill	dia (in)	Drill	dia (in)			Drill	dia (in)	Drill	dia (in)	
3/16	18	0.1695	11	0.191	0.191–0.203	3/16	18	0.169	13	0.185	0.185–0.187
¼	1	0.228	¼	0.250	0.250–0.265	¼	1	0.228	C	0.242	0.242–0.246
5/16	L	0.290	5/16	0.312	0.312–0.330	5/16	L	0.290	N	0.302	0.302–0.306
⅜	11/32	0.343	⅜	0.375	0.375–0.395	⅜	11/32	0.343	U	0.368	0.368–0.371

Downloaded from http://www.everyspec.com

Table 6-61. Drilling procedures for blind-type lock bolts

BOLT DIA (IN)	PREDRILL		DRILL SIZE		HOLE TOLERANCE (IN)
	DRILL	DIA (IN)	DRILL	DIA (IN)	
1/4	D	0.246	G	0.261	0.261–0.265
5/16	21/64	0.328	S	0.348	0.348–0.352

Installing the pull-type lock bolt is an automatic, continuous process. The sequence is shown in Figure 6-60. When installing a pull-type lock bolt, never drive it past the interference fit. Follow these steps:

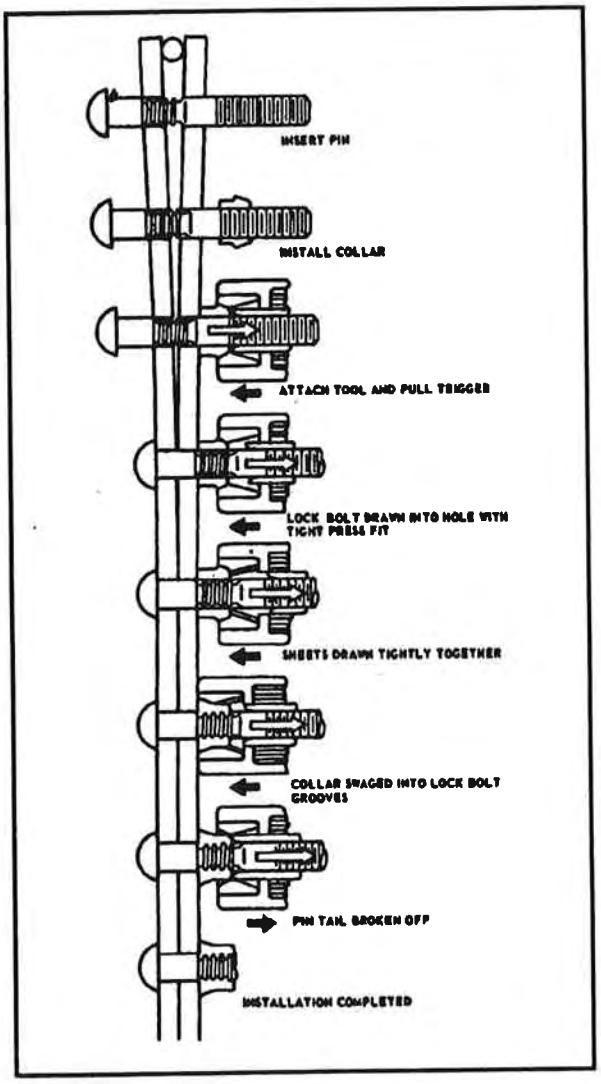

Figure 6-60. Installation of pull-type lock bolt

- Insert the pin from one side of the work. Then place the locking collar over the extending lock-bolt pin tail.
- Apply the gun. (Chuck jaws will automatically engage the pull of the extending pin tail.)
- Squeeze the gun trigger. This will exert a pull on the pin; it will pull the collar against the swaging anvil, drawing the work tightly together. After the fraying surfaces are in close contact, the pin is pulled into an interference or clearance fit hole. As pull on the pin increases, the anvil of the tool is drawn over the collar, swaging the collar onto the locking grooves of the pin to form a rigid, permanent lock. The continued buildup of force automatically brakes the lock-bolt pin at the breakneck groove, and the pin tail is automatically ejected. When the gun piston returns to its initial forward position, the ejector advances, disengaging the anvil from the swaged collar.

The stump-type lock bolt is installed according to the following steps (Figure 6-61):

- Insert the pin from one side of the work. Make sure that the pin fills the hole because stump pins of alloy steel do not expand to fill oversize holes. Slip the lock-bolt collar over the extending locking grooves of the pin. Then place a bucking bar against the head of the pin.

NOTE: Make sure sheets are clamped firmly together to avoid separation.

- Place swaging set over the collar, align it with the pin, and apply driving pressure until the soft collar is forced into the locking grooves of the extended stump shank. If possible, hold drive set and gun at a 90° angle to the face

Downloaded from http://www.everyspec.com

of the work. Continue applying pressure until the head is fully formed. Straight portions of the shank should be flush with, or protrude not more than 1/32 inch from, the work.

- Drive the lock-bolt stump collar onto a surface perpendicular to the axis of the hole. Deviations from perpendicular (90°) may not exceed 7°. Drive the manufactured head of the lock-bolt stump onto a surface perpendicular to the axis of the hole, whenever possible. Spot-face for other conditions.

Installing blind-type lock bolts (Figure 6-62) is basically the same process as installing pull-type lock bolts.

Inspection and Removal

The lock bolt collar is swaged throughout most of its complete length. Tolerance of the broken end of the pin in relation to the top of the collar will be within the following dimensions:

- 3/16-inch-diameter pin—0.079 inch below to 0.032 inch above.
- 1/4-inch-diameter pin—0.079 inch below to 0.050 inch above.
- 5/16-inch-diameter pin—0.079 inch below to 0.050 inch above.
- 3/8-inch-diameter pin—0.079 inch below to 0.060 inch above.

When it becomes necessary to remove a lock bolt, remove the collar by splitting it with a sharp cold chisel. Take care not to break out or deform the hole. Use backup bar on the opposite side of the collar being split. You can then drive out the pin with a drift

NOTE: If the lock bolt collar is properly removed, the lock bolt may be replaced by another lock bolt of the same diameter. Depending on the condition of the hole, it may be possible to make several replacements, provided an interference fit is still present.

JO-BOLTS

Jo-Bolts are high-strength structural blind fasteners used in close-tolerance holes where assembly does not allow installation of AN, NAS, or MS bolts. They are sometimes used when saving weight is a factor. However, Jo-Bolts are always considered part of the permanent structure and are primarily subject to shear loads. When installed as a unit, Jo-Bolts consist of a bolt, a nut, and a sleeve.

Jo-Bolts are identified by head type. There are five different head types:

- Flush-head (F) Jo-Bolts (Figure 6-63) normally take the same size countersink or dimple that is required for the corresponding size of AN509 screw head. The nut and bolt are made of alloy steel and the sleeve of annealed corrosion-resistant steel. All components are cadmium-plated.
- Hex-head (P and PA) Jo-Bolts (Figure 6-64) have an alloy steel bolt and an annealed corrosion-resistant sleeve. The bolt and sleeve are both cadmium-plated.
- Millable hex-head (FA) Jo-Bolts (Figure 6-65) normally take the same size countersink or dimple that is required for the corresponding size MS20426 rivet. The bolt is made of alloy steel and the sleeve of corrosion-resistant steel. Both are cadmium-plated. The nut is aluminum alloy. After installation, the nut head is milled flush.
- Oversize-type Jo-Bolts (FO and PO) are used in special applications where the installation hole has been elongated and standard Jo-Bolts cannot be used. The head size and material specifications of the FO- and PO-type Jo-Bolt are the same as the F and P types respectively, the only difference being the size of the nut and the shank diameter.
- Flush-head Jo-Bolts (426F) are designed to fit in a countersunk or dimpled hole prepared for an MS20426 rivet. Nut shank size and material specifications are the same as for the F type of flush-head Jo-Bolt.

The high shear and tension strength of Jo-Bolts makes them especially suitable for use in high stess areas where other blind fasteners would not be practical. They are used in areas that do not often require replacement or servicing. Because Jo-Bolts are three-part fasteners, they should not be used where any loose part could be drawn into the engine air intake.

Downloaded from http://www.everyspec.com

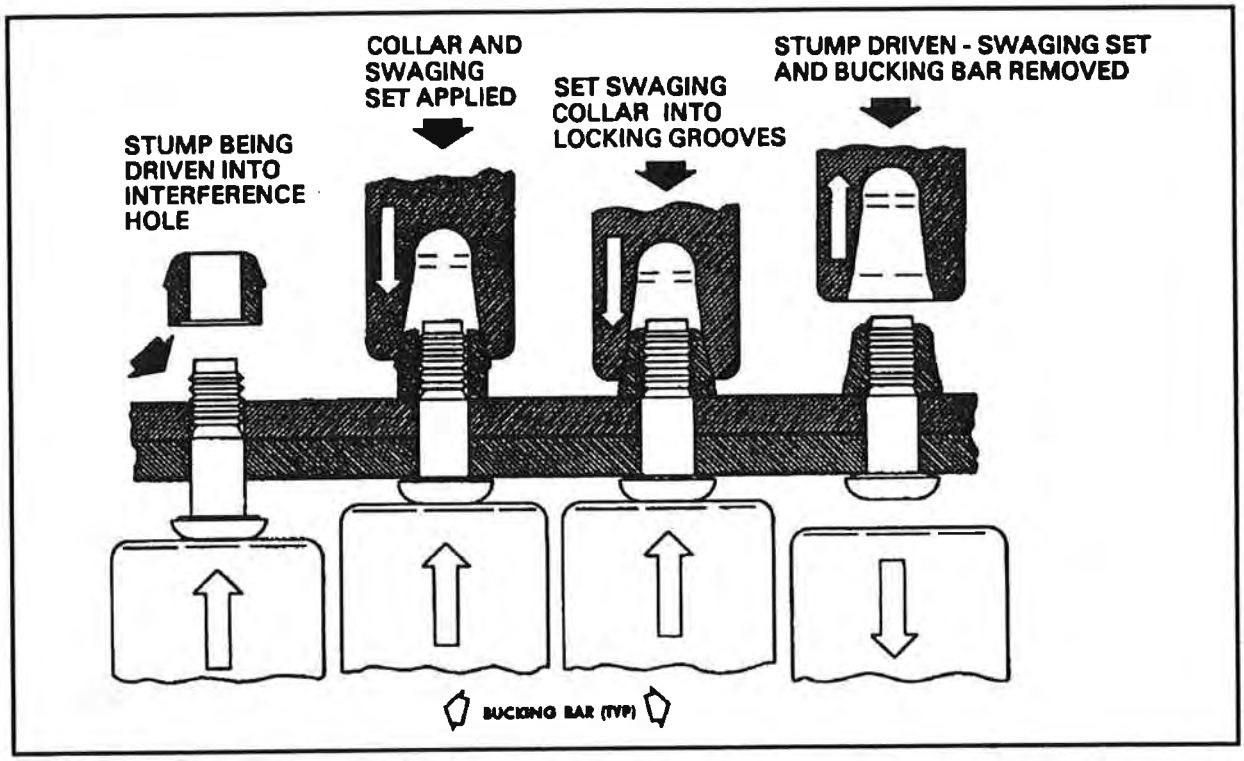

Figure 6-61. Installation of stump-type lock bolt

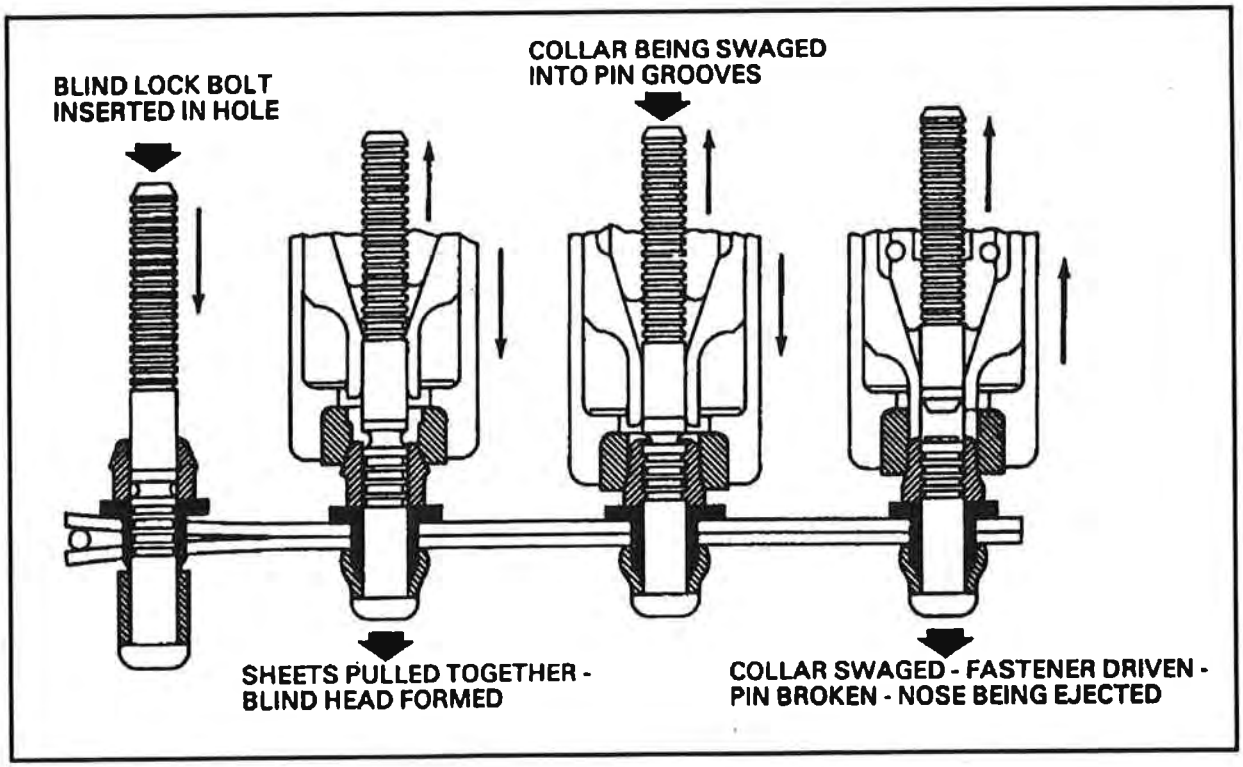

Figure 6-62. Installation of blind-type lock bolt

Downloaded from http://www.everyspec.com

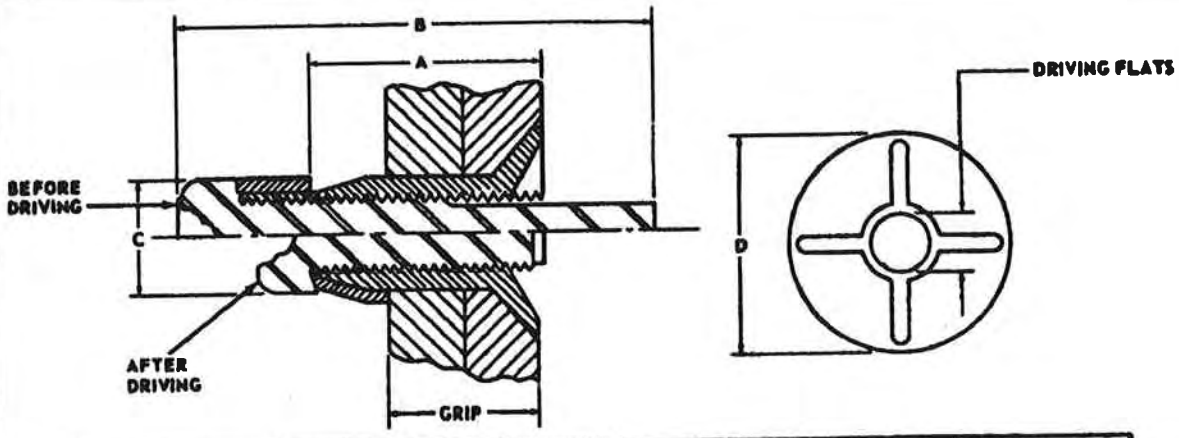

BOLT SIZE			NO 8 NOMINAL		NO 10 NOMINAL		1/4 NOMINAL		5/16 NOMINAL		3/8 NOMINAL	
DASH NO	GRIP RANGE MIN	GRIP RANGE MAX	A ±0.015	B 0.015	A ±0.015	B ±0.015	A ±0.015	B ±0.015	A ±0.015	B ±0.015	A ±0.015	B ±0.015
2	0.094	0.156	0.230	0.733	0.228	0.853	0.256	0.881				
3	0.156	0.219	0.293	0.795	0.291	0.916	0.319	0.944	0.344	1.096	0.417	1.179
4	0.219	0.281	0.355	0.858	0.353	0.978	0.381	1.006	0.406	1.158	0.479	1.242
5	0.281	0.344	0.418	0.920	0.416	1.041	0.444	1.069	0.469	1.221	0.542	1.304
6	0.344	0.406	0.480	0.983	0.478	1.103	0.506	1.131	0.531	1.283	0.604	1.367
7	0.406	0.469	0.543	1.045	0.541	1.166	0.569	1.194	0.594	1.346	0.667	1.429
8	0.469	0.531	0.605	1.108	0.603	1.228	0.631	1.256	0.656	1.408	0.729	1.492
9	0.531	0.594	0.668	1.170	0.666	1.291	0.694	1.319	0.719	1.471	0.792	1.554
10	0.594	0.656	0.730	1.233	0.728	1.353	0.756	1.381	0.781	1.533	0.854	1.617
11	0.656	0.719	0.793	1.295	0.791	1.416	0.819	1.444	0.844	1.596	0.917	1.679
12	0.719	0.781	0.855	1.358	0.853	1.478	0.881	1.506	0.906	1.658	0.979	1.742
13	0.781	0.844	0.918	1.420	0.916	1.541	0.944	1.569	0.969	1.721	1.042	1.804
14	0.844	0.906	0.980	1.483	0.978	1.603	1.006	1.631	1.031	1.783	1.104	1.867
15	0.906	0.969	1.043	1.545	1.041	1.666	1.069	1.694	1.094	1.846	1.167	1.929
16	0.969	1.031	1.105	1.608	1.103	1.728	1.131	1.756	1.156	1.908	1.229	1.992

PART NO	NOM SIZE	NUT DIA C	HEAD DIA D		PILOT DRILL		FINAL REAM	
		TYPE F, FO, AND 426F	TYPE F AND FO	TYPE 426F	TYPE F AND 426F	TYPE FO	TYPE F AND 426F	TYPE FO
164	NO. 8	0.161 0.156	0.332 0.325	0.290 0.282	NO. 25 (0.150)	NO. 20 (0.161)	0.167 0.164	0.182 0.180
200	NO. 10	0.199 0.195	0.385 0.378	0.357 0.349	NO 15 (0.180)	NO. 7 (0.201)	0.202 0.199	0.217 0.215
260	1/4	0.260 0.254	0.507 0.499	0.480 0.472	D (0.246)	G (0.261)	0.263 0.260	0.278 0.276
312	5/16	0.312 0.306	0.635 0.626	0.568 0.559	L (0.290)	N (0.302)	0.315 0.312	0.329 0.327
375	3/8	0.375 0.366	0.762 0.752	0.698 0.688	S (0.348)	U (0.368)	0.378 0.374	0.392 0.390

NOTE:
DIMENSIONS SHOWN ARE IN INCHES.

Figure 6-63. Grip ranges, sizes, and diameters of AN509 flush-head Jo-Bolts

Downloaded from http://www.everyspec.com

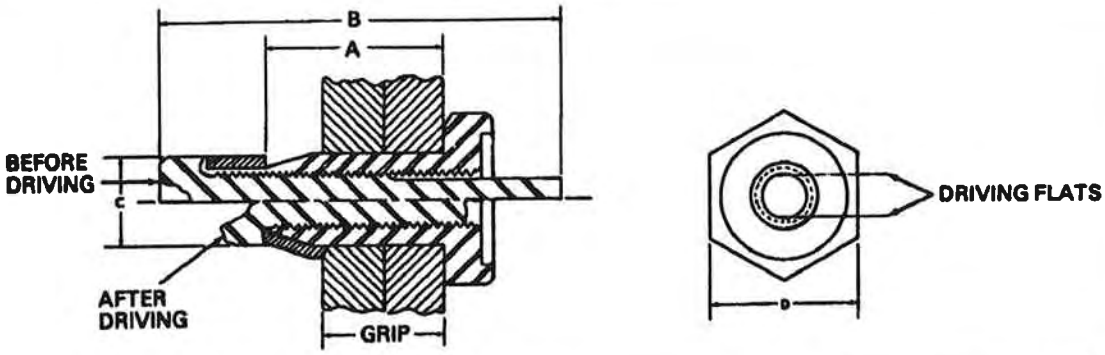

BOLT SIZE			NO 8 NOMINAL		NO 10 NOMINAL		1/4 NOMINAL		5 16 NOMINAL		3/8 NOMINAL	
DASH NO	GRIP RANGE MIN	GRIP RANGE MAX	A ±0.015	B ±0.015	A ±0.015	B ±0.015	A ±0.015	B ±0.015	A ±0.015	B ±0.015	A ±0.015	B ±0.015
1	0.031	0.094	0.168	0.733								
2	0.094	0.156	0.230	0.795	0.228	0.936	0.256	1.006				
3	0.156	0.219	0.293	0.858	0.291	0.999	0.319	1.069	0.344	1.221	0.417	1.304
4	0.219	0.281	0.355	0.920	0.353	1.061	0.381	1.131	0.406	1.283	0.479	1.367
5	0.281	0.344	0.418	0.983	0.416	1.124	0.444	1.194	0.469	1.346	0.542	1.429
6	0.344	0.406	0.480	1.045	0.478	1.186	0.506	1.256	0.531	1.408	0.604	1.492
7	0.406	0.469	0.543	1.108	0.541	1.249	0.569	1.319	0.594	1.471	0.667	1.554
8	0.469	0.531	0.605	1.170	0.603	1.311	0.631	1.381	0.656	1.533	0.729	1.617
9	0.531	0.594	0.668	1.233	0.666	1.374	0.694	1.444	0.719	1.596	0.792	1.679
10	0.594	0.656	0.730	1.295	0.728	1.436	0.756	1.506	0.781	1.658	0.854	1.742
11	0.656	0.719	0.793	1.358	0.791	1.499	0.819	1.569	0.844	1.721	0.917	1.804
12	0.719	0.781	0.855	1.420	0.853	1.561	0.881	1.631	0.906	1.783	0.979	1.867
13	0.781	0.844	0.918	1.483	0.916	1.624	0.944	1.694	0.969	1.846	1.042	1.929
14	0.844	0.906	0.980	1.545	0.978	1.686	1.006	1.756	1.031	1.908	1.104	1.992
15	0.906	0.969	1.043	1.608	1.041	1.749	1.069	1.819	1.094	1.971	1.167	2.054
16	0.969	1.031	1.105	1.670	0.103	1.811	1.131	1.881	1.156	2.033	1.229	2.117

PART NO	NOM SIZE	NUT DIA C	HEAD DIA D		PILOT DRILL		FINAL REAM	
		TYPE P, PO, AND PA	TYPE P AND PO	TYPE PA	TYPE PO	TYPE P AND PA	TYPE P AND PA	TYPE PO
164	NO. 8	0.161 0.156	0.250 0.244	0.283 0.277	NO. 20 (0.161)	NO. 25 (0.150)	0.167 0.164	0.182 0.180
200	NO. 10	0.199 0.195	0.312 0.305	0.346 0.332	NO. 7 (0.201)	NO. 15 (0.180)	0.202 0.199	0.217 0.215
260	1/4	0.260 0.254	0.375 0.367	0.472 0.458	G (0.261)	D (0.246)	0.263 0.260	0.278 0.276
312	5/16	0.312 0 306	0.437 0.429		N (0.302)	L (0.290)	0.315 0.312	0.329 0.327
375	3/8	0.375 0.366	0.500 0.491		U (0.368)	S (0.348)	0.378 0.374	0.392 0.390

NOTES:

1. PA TYPE NOT AVAILABLE IN THESE SIZES.
2. DIMENSIONS SHOWN ARE IN INCHES.

Figure 6-64. Diameters, sizes, and grip ranges of hex-head Jo-Bolts

Downloaded from http://www.everyspec.com

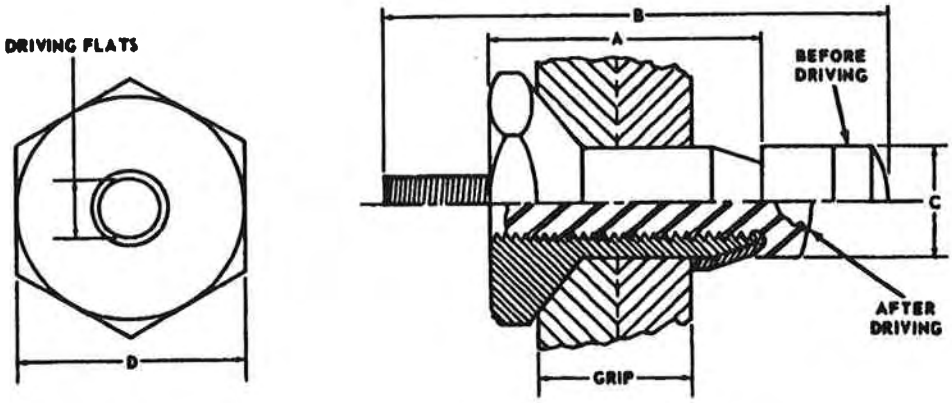

BOLT SIZE			NO 8 NOMINAL		NO 10 NOMINAL		1/4 NOMINAL	
DASH NO	GRIP RANGE MIN	GRIP RANGE MAX	A ±0.015	B ±0.015	A ±0.015	B ±0.015	A ±0.015	B ±0.015
1								
2	0.094	0.156	0.305	0.795	0.308	0.936	0.346	
3	0.156	0.219	0.368	0.858	0.371	0.999	0.399	
4	0.219	0.281	0.430	0.920	0.433	1.061	0.461	
5	0.281	0.344	0.493	0.983	0.496	1.124	0.524	
6	0.344	0.406	0.555	1.045	0.558	1.186	0.586	
7	0.406	0.469	0.618	1.108	0.621	1.249	0.649	
8	0.469	0.531	0.680	1.170	0.683	1.311	0.711	
9	0.531	0.594	0.743	1.233	0.746	1.374	0.774	
10	0.594	0.656	0.805	1.295	0.808	1.437	0.836	
11	0.656	0.719	0.868	1.358	0.871	1.499	0.899	
12	0.719	0.781	0.930	1.420	0.933	1.561	0.961	
13	0.781	0.844	0.993	1.483	0.996	1.624	1.024	
14	0.844	0.906	1.055	1.545	1.058	1.686	1.086	
15	0.906	0.969	1.118	1.608	1.121	1.749	1.149	
16	0.969	1.031	1.180	1.670	1.183	1.811	1.211	

PART NO	NOM SIZE	NUT DIA C	HEAD DIA D	PILOT DRILL	FINAL REAM
164	NO. 8	0.161 0.156	0.283 0.277	NO. 25 (0.150)	0.167 0.164
200	NO. 10	0.199 0.195	0.346 0.332	NO. 15 (0.180)	0.202 0.199
260	1/4	0.260 0.254	0.472 0.458	D (0.246)	0.263 0.260

NOTE:
DIMENSIONS SHOWN ARE IN INCHES.

Figure 6-65. Sizes, grip range, and diameters of millable hex-head Jo-Bolts

Downloaded from http://www.everyspec.com

Selection

The Jo-Bolt grip range is determined by measuring the thickness of the material with a hook scale. Take the measurement with the material clamped and include variations due to sheet thickness, primer, and any spaces between the sheets caused by irregularities in contour.

Installation

Jo-Bolts are installed with special tools and equipment (Figure 6-66). Pilot and ream drill sizes for Jo-Bolts are shown in Figures 6-63, 6-64, 6-65, and 6-67. The size of a hole should be such that the selected Jo-Bolt can be pushed through the hole according to the applicable installation figure. The Jo-Bolt should never be forcibly driven through the hole. A very light tap is permissible in aluminum alloys but not in steel. Insert a Jo-Bolt in a drilled hole and drive it in according to these steps:

- Select the right combination of tools.
- Engage the slabbed portion of the bolt shank with the nose adapter of the tool. Make sure the cogs on the nose engage the nut.
- Hold the driving tool down tightly against the head of the Jo-Bolt and perpendicular to the work. Failure to do this may result in the stem breaking off before the Jo-Bolt is tight.
- Apply power. As power is applied, the bolt is turned while the nut is held. The sleeve is compressed between the bolt head and the control end of the nut and is drawn over the taper. The sleeve is expanded, forming the blind head against the surface of the inner member. As driving is completed, the slabbed portion of the bolt is snapped off and ejected from the tool.
- After driving is completed, touch up the end of the bolt at the break-off point with zinc chromate primer.

Removal

If it is necessary to remove a Jo-Bolt, use a drill with a speed of 500 RPM or less. Figures 6-68 and 6-69 show how to remove a Jo-Bolt. Table 6-62 shows the correct drill size to use when removing one.

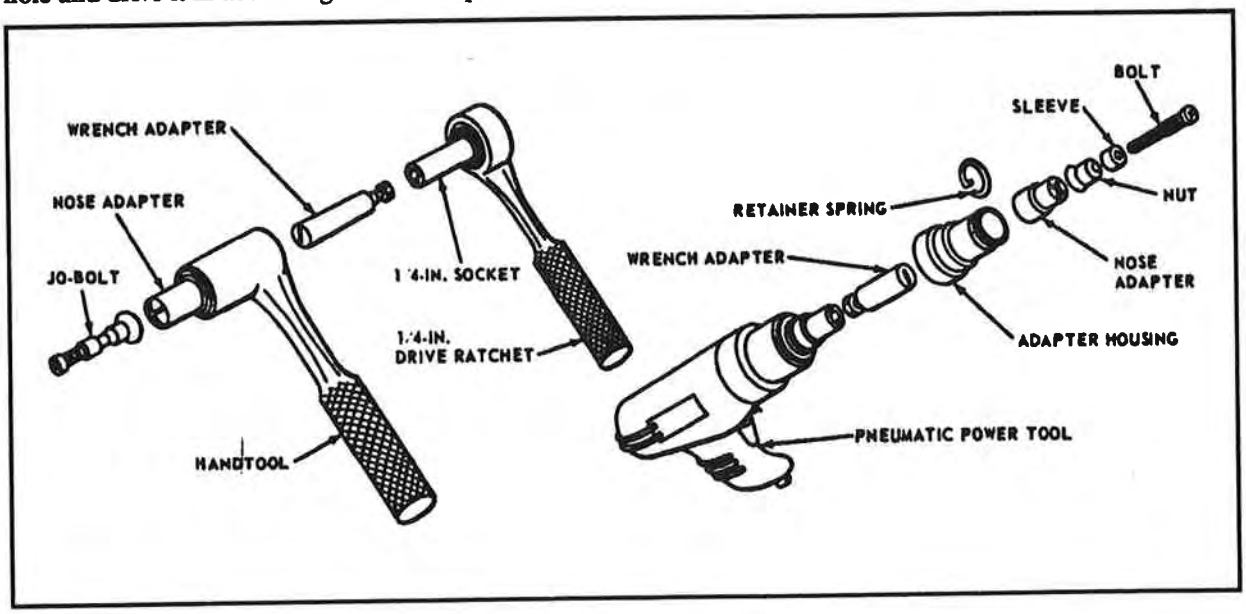

Figure 6-66. Jo-Bolt installation tools

Section IV. Resistance Welding

RESTRICTIONS

Resistance welding is the only type of welding allowed on the heat-treatable aluminum alloys used in Army aircraft. This type of welding will be done only by the aircraft manufacturer or at a depot rebuild factory. Resistance welds are also known as spot welds. When spot welds fail, they can usually be repaired with solid-shank rivets. Figure 6-70 shows methods for repairing sheared spot welds.

Downloaded from http://www.everyspec.com

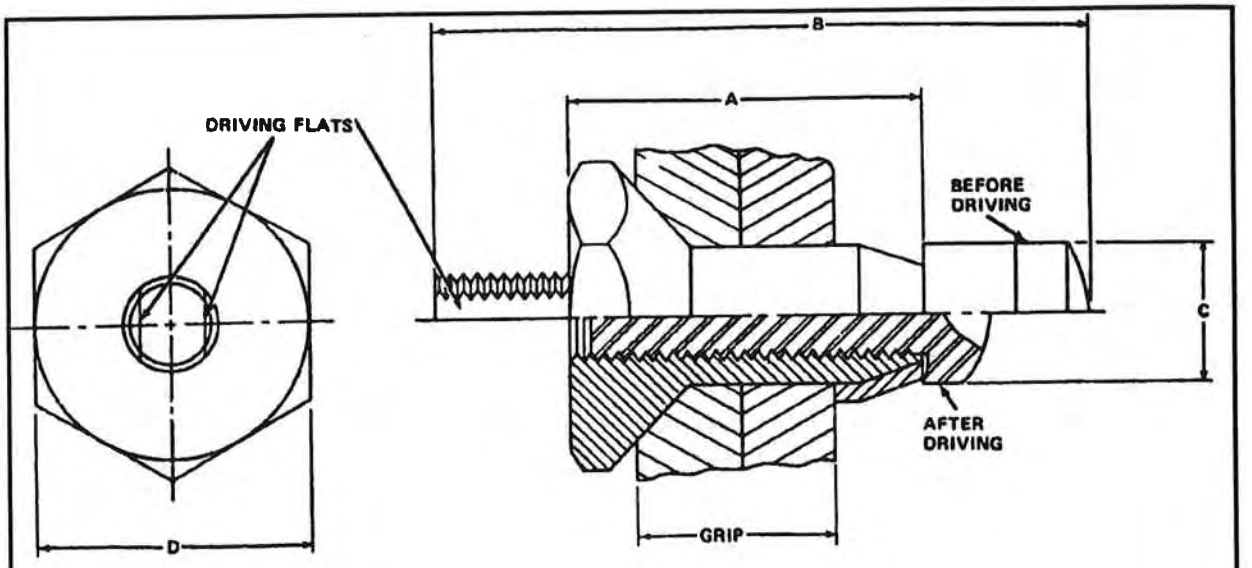

MILLABLE-HEX FA JO-BOLT

DASH NO	GRIP RANGE		5/32 IN (164)*		3/16 IN (200)		1/4 IN (260)	
	MIN	MAX	A ±0.015	B ±0.015	A ±0.015	B ±0.015	A ±0.015	B ±0.015
-2	0.094	0.156	0.305	0.795	0.308	0.963	0.336	0.960
-3	0.156	0.219	0.368	0.858	0.371	0.999	0.399	1.023
-4	0.219	0.281	0.430	0.920	0.433	1.061	0.461	1.085
-5	0.281	0.344	0.493	0.983	0.496	1.124	0.524	1.148
-6	0.344	0.406	0.555	1.045	0.558	1.186	0.586	1.210
-7	0.406	0.469	0.618	1.108	0.621	1.249	0.649	1.273
-8	0.469	0.531	0.680	1.170	0.683	1.311	0.711	1.335
-9	0.531*	0.594	0.743	1.233	0.746	1.374	0.774	1.398
-10	0.594	0.656	0.805	1.295	0.808	1.437	0.836	1.468
-11	0.656	0.719	0.868	1.358	0.871	1.499	0.899	1.523
-12	0.719	0.781	0.930	1.420	0.933	1.561	0.961	1.585
-13	0.781	0.844	0.993	1.483	0.996	1.624	1.024	1.605
-14	0.844	0.906	1.055	1.545	1.058	1.686	1.086	1.712
-15	0.906	0.969	1.118	1.608	1.121	1.749	1.149	1.775
-16	0.969	1.031	1.180	1.670	1.183	1.811	1.211	1.837

PART NO	NOM SIZE IN	NUT DIA C ±0.001	HEAD DIA D IN	PILOT DRILL	FINAL REAM		CKS MIN SHEET THICK	100° CKS 0.005	100° RIVET DIMPLE DIE
					MIN	MAX			
*164	5/32	0.163	9/32	NO. 25(0.149)	0.164	0.167	0.063	0.247	5/12
200	3/16	0.198	11/32	NO. 15(0.180)	0.199	0.202	0.071	0.330	3/16
260	1/4	0.259	15/32	D(0.246)	0.260	0.263	0.100	0.455	1/4

* Not approved for structural repair.

Figure 6-67. Jo-Bolt specification tables

Downloaded from http://www.everyspec.com

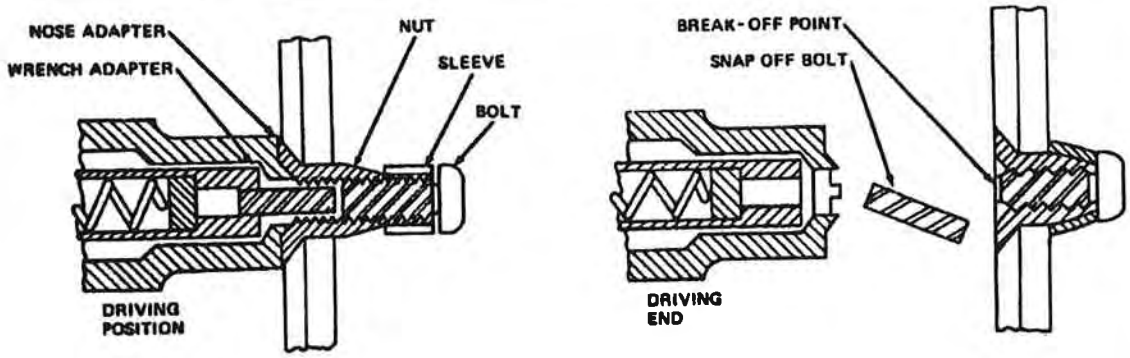

JO–BOLT BREAK-OFF TOLERANCE

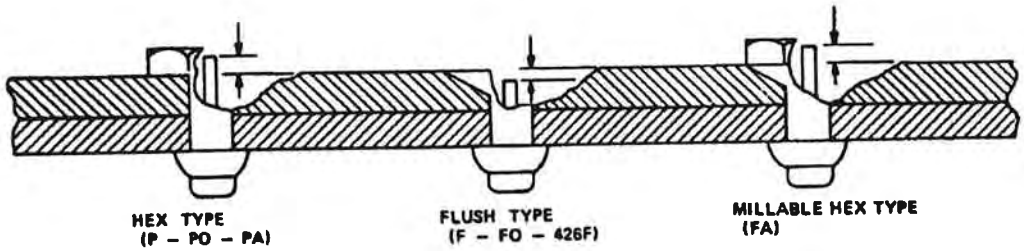

STANDARD JO-BOLTS

PART NO	NOMINAL SIZE INCHES	P AND PA TYPE		F TYPE		FA TYPE	
		MIN	MAX	MIN	MAX	MIN	MAX
164	5/32	+0.000	+0.078	+0.010	-0.068	+0.000	+0.078
200	3/16	+0.015	+0.093	+0.000	-0.078	+0.000	+0.078
260	1/4	+0.037	+0.115	+0.000	-0.078	+0.000	+0.078
312	5/16	+0.047*	+0.130*	+0.000	-0.083	*	*
375	3/8	+0.059*	+0.142*	+0.000	-0.083	*	*

*PA and FA types not made in these sizes.

OVERSIZE AND SPECIAL TYPE JO-BOLTS

PART NO	NOMINAL SIZE INCHES	PO TYPE		FO TYPE		426F TYPE	
		MIN	MAX	MIN	MAX	MIN	MAX
164	5/32	+0.000	+0.078	+0.010	-0.068	+0.010	-0.068
200	3/16	+0.015	+0.093	+0.000	-0.078	+0.000	-0.078
260	1/4	+0.037	+0.115	+0.000	-0.078	+0.000	-0.078
312	5/16	+0.047	+0.130	+0.000	-0.083	0.000	-0.083
375	3/8	+0.059	+0.142	+0.000	-0.083	+0.000	-0.083

NOTE

BREAK-OFF TOLERANCES ARE MEASURED FROM THE SKIN SURFACE ONLY. MEASURE FOR CORRECT TOLERANCE BEFORE MILLING FA-TYPE. DO NOT MILL ANY OTHER TYPE HEAD.

Figure 6-67. Jo-Bolt specification tables (cont)

Downloaded from http://www.everyspec.com

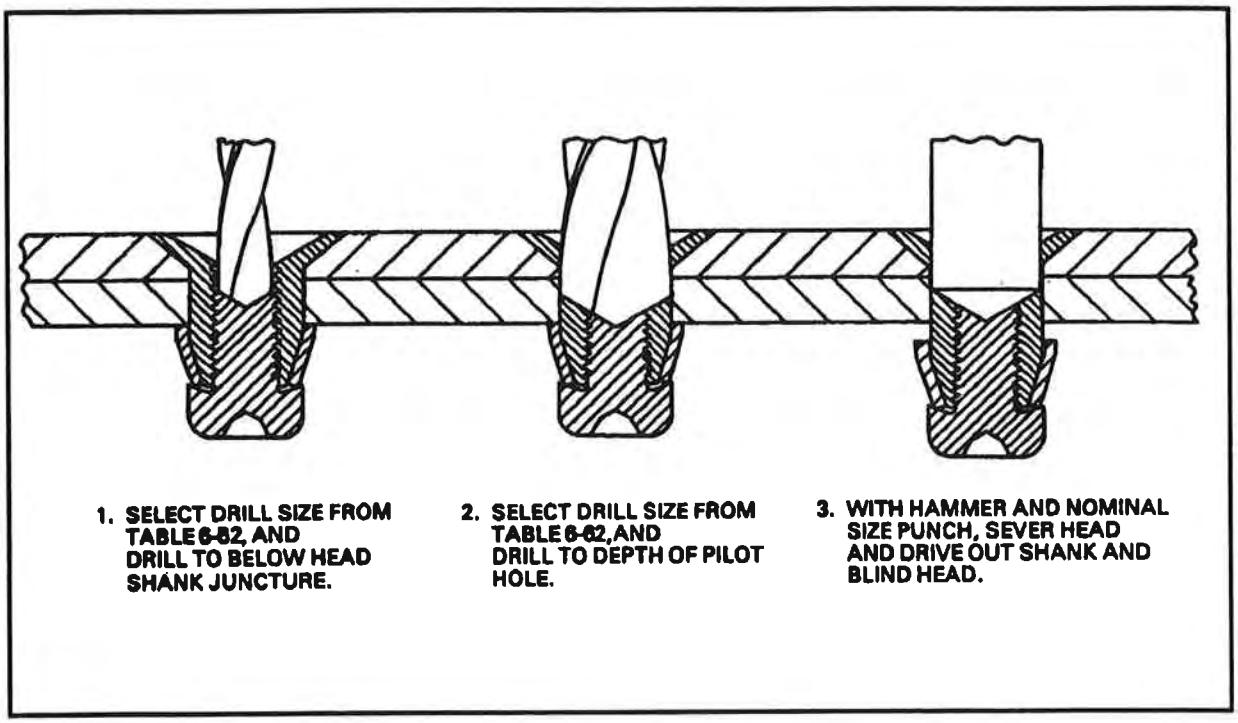

Figure 6-68. Removal of Jo-Bolts installed too short

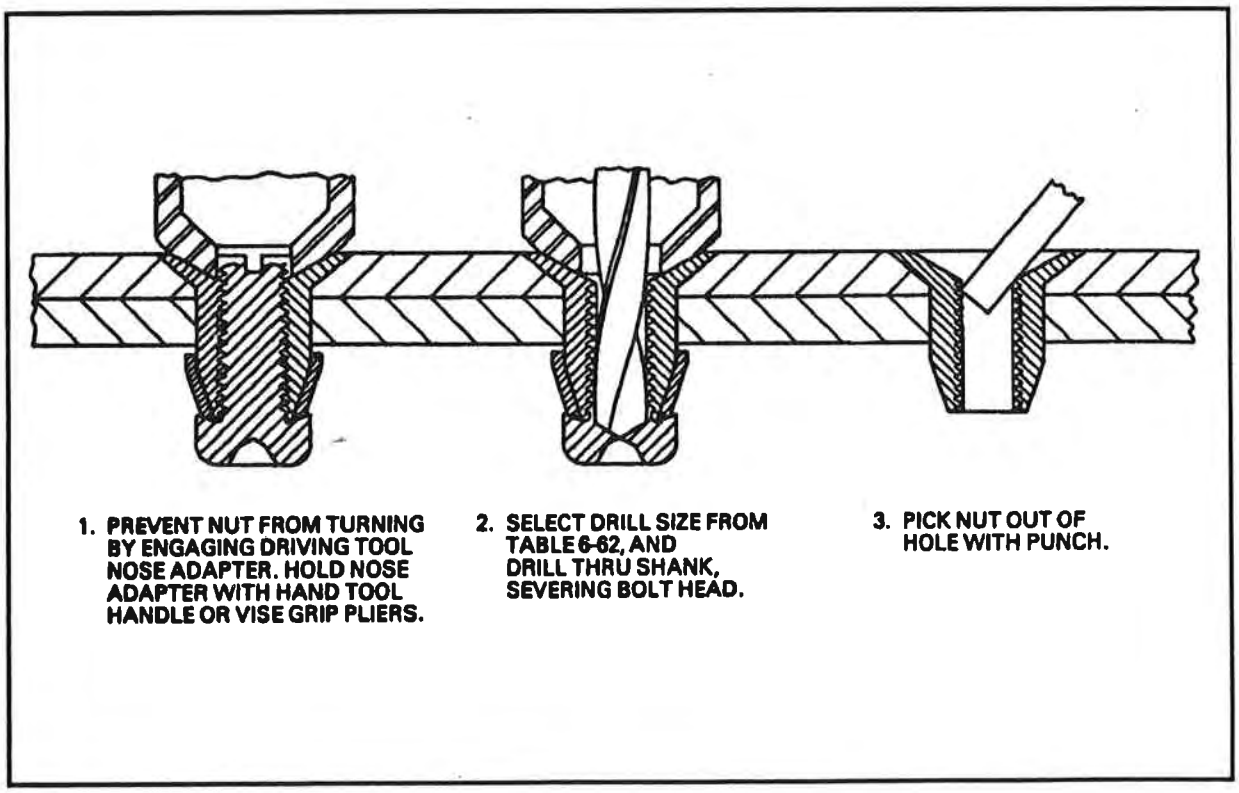

Figure 6-69. Removal of Jo-Bolt installed too long

Downloaded from http://www.everyspec.com

ADVANTAGES

Electrical resistance welding has solved production problems with a reduction in labor, air, noise, and time. One advantage in using resistance welding is that it localizes heating at the specific place where fusion is desired; at the same time, it allows both the amount of heat and the extent of fusion to be accurately controlled. No filler metal need be added to the weld.

NOTE: When there are more than two spot-weld failures at the same spot or when breaks exceed 3/8 inch in diameter, the areas should be repaired, whenever possible, in the same manner as for a complete break, using a flush patch procedure.

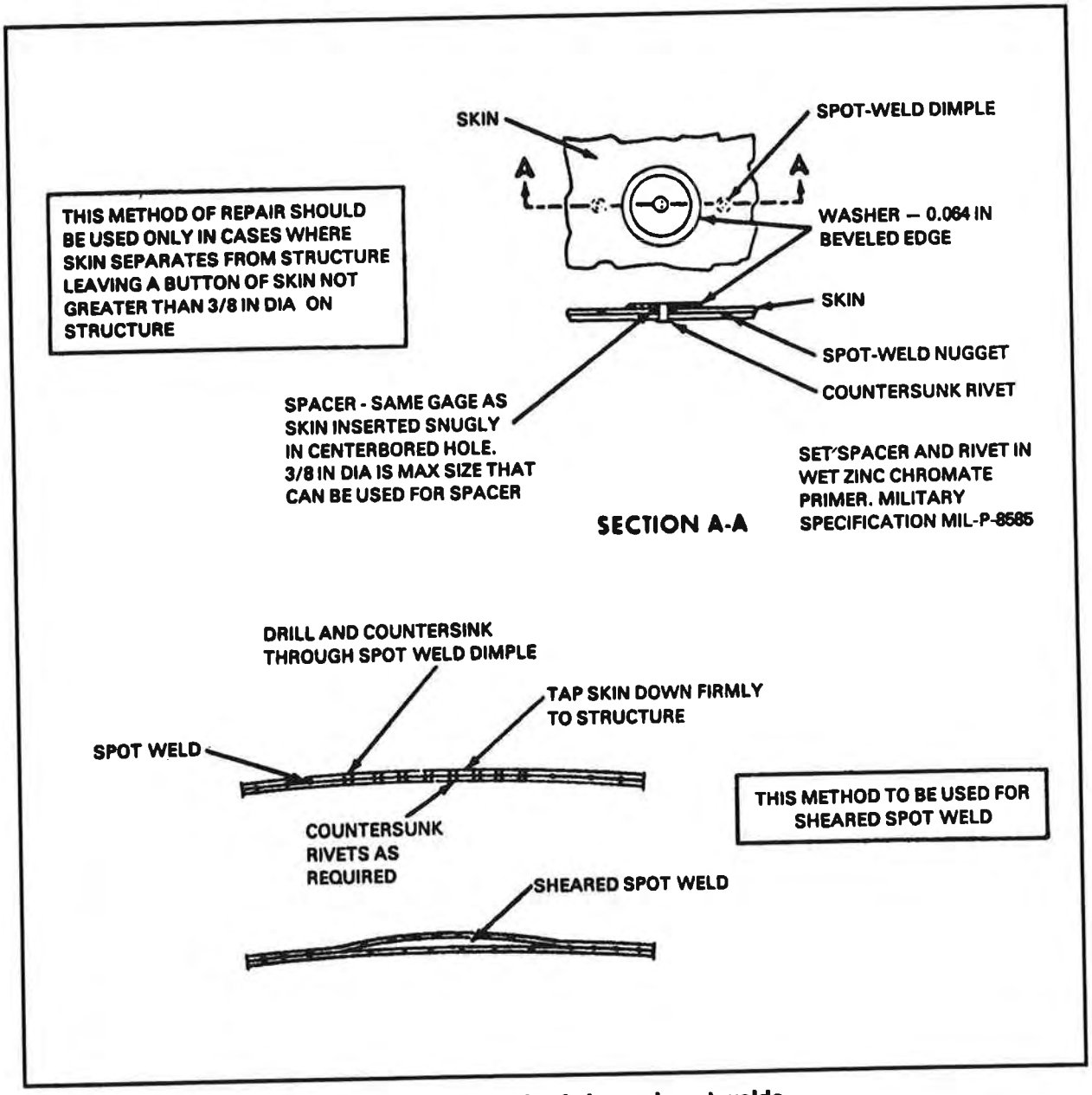

Figure 6-70. Repair of sheared spot welds

Downloaded from http://www.everyspec.com

Table 6-62. Drill sizes for removing Jo-Bolts

Jo-Bolt Part No (all head types)	Drill Size	
	COL A	COL B
164	No 42 (0.0935)	No 23 (0.154)
200	No 35 (0.110)	No 12 (0.189)
260	No 24 (0.152)	D (0.246)
312	No 17 (0.173)	M (0.295)
375	No 5 (0.2055)	23/64 (0.3594)

Downloaded from http://www.everyspec.com

CHAPTER 7

AIRCRAFT FASTENERS

Fastening devices allow quick dismantling or replacement of frequently removed and replaced aircraft parts. Riveting these parts each time they are serviced would weaken or ruin the joint. Also, some joints require greater tensile strength and stiffness than rivets can provide. Bolts, turn-lock fasteners, and structural screws are temporary fastening devices that provide the required rigidity and fail-safe attachment. Use bolts where great strength is required. Where strength is less critical, use turn-lock fasteners and structural screws. When aircraft fasteners have to be replaced, duplicate fasteners should be used. If these fasteners are not available, substitutes may be used. But before substituting any fastener, consult TM 55-1500-204-25/1 to ensure making proper selection. A description of fasteners must be based on understanding the differences between bolts and screws. In many ways, they are similar. Both are pins or rods made of aluminum or steel alloys, and both are used for fastening or holding. Each has a head on one end and screw threads on the other end. However, the following differences exist between the bolts and screws:

- The threaded end of the bolt is always blunt, and a nut must be screwed onto it to complete the assembly. The threaded end of a screw can be either blunt or pointed, and it can fit either into a female receptacle or directly into the metal being secured.
- The threaded portion of a bolt is relatively short, and its grip length (unthreaded portion) is relatively long. The threaded portion of a screw is longer than that of a bolt, and it has no specific grip length.
- The assembly of a bolt is usually tightened by turning the nut on the bolt, and the bolt head may or may not be designed to rotate. Tighten a screw by rotating the head.

Section I. Bolts

COMPOSITION

Aircraft bolts are made from cadmium- or zinc-plated, corrosion- resistant steel and anodized aluminum alloys. Most aircraft structural bolts are general-purpose, hexagon-head bolts; internal wrenching bolts; or close-tolerance bolts. Aircraft manufacturers sometimes make bolts of different dimensions or higher strength than standard types. Because these bolts are made for a particular application, they must be replaced with similar bolts. When such bolts are not available and must be fabricated locally, use the identical material and heat treatment specified in the applicable drawings or an authorized, properly heat-treated substitute material. Special bolts are identified by the letter "S" stamped on the head.

IDENTIFICATION

Bolts may be classified for identification by the shape of the head, the method of securing them, and their use. The head shape may be hexagon, square, eye, or internal wrenching. Unless stated otherwise, thread sizes on aircraft bolts are designated in NF readings.

Bolt Head Markings

Bolts are designed and made of different materials and with different tensile strengths to match their individual heat ranges and grip stresses. Each bolt is marked with a code for identification and physical characteristics. Most bolts commonly used in aircraft structural repair are marked on the head to indicate their material composition and whether or not the bolt is close tolerance. A single dash (-) indicates corrosion-resistant steel. An X enclosed in a triangle indicates alloy steel of 126,000 to 145,000 pounds per square inch. A single X on the head of the bolt indicates medium-carbon steel alloy. These markings are sometimes combined (Figure 7-1).

Part Number Designations

Several different military bolt part number designations are used on Army aircraft, such as AN (Air Force-Navy), MS (Military Standard), NAS (National Aircraft Standard). Only the AN bolt part number will be discussed here. For further information on bolts, refer to TM 55-1500-204-25/1 and TO 1-1A-8. The bolt part number designation gives the type, diameter, material, length, and grip length of the bolt,

Downloaded from http://www.everyspec.com

and states whether or not the head or shank is drilled. An example of such a designation is AN3DD6A--

- AN indicates Air Force-Navy standard design.
- 3 indicates 3/16-inch diameter.
- DD indicates 2024T aluminum alloy.
- 6 indicates 25/32-inch length and 3/8-inch grip length.
- A indicates bolt undrilled.

If DD were replaced by the letter C, material used would have been corrosion-resistant steel. If no material code is shown, a dash (-) appears, indicating carbon steel. The letter H in front of the number 6 indicates that both bolt head and shank are drilled. The letter H in front of the dash number and the letter A after it indicate that only the head is drilled. AN3DD6 indicates that only the shank is drilled, AN3DDH6 that both head and shank are drilled, and AN3DDH6A that only the head is drilled.

GRIP LENGTH

The grip length of a bolt is the length of the unthreaded portion of the bolt shank (between the head and threaded portion). Grip length is proportional to the length of the bolt and is usually included in the dash number of the coding number, which also includes the bolt length. In Table 7-1 the bolt dash numbers are listed in the left-hand column. Each dash number indicates the same combination of bolt and grip lengths, regardless of the bolt diameter. When selecting a bolt, make sure that its grip length equals the thickness of the material being bolted together, that no part of the threads bears on the material, and that the shank does not protrude too far through the nut. Because no particular bolt can always meet these conditions, the solution may be to select a bolt of slightly greater grip length than required and place a washer under the nut or bolt head.

TYPES

Two basic types of general-purpose bolts, hexagon head and close tolerance, are used in aircraft structural situations.

Hexagon-Head Bolts

The common hexagon-head aircraft bolt, AN3 through AN20, is an all-purpose structural bolt used for general applications involving tension and shear loads. It is made of cadmium- or zinc-plated, non-corrosion-resistant steel; corrosion-resistant steel; or anodized aluminum alloy. Steel bolts smaller than AN3 and aluminum alloy bolts smaller than AN4 are easily overstressed at assembly; therefore, do not use them in primary structures.

SINGLE DASH	STEEL, CORROSION RESISTANT (16 Cr, 2Ni)	
SINGLE X	STEEL, ALLOY MEDIUM CARBON (Cr, Ni, Mo)	
2 RADIAL DASHES 180 DEGREES APART	STEEL, MEDIUM CARBON	
		CLOSE TOLERANCE CLOSE-TOLERANCE SHANK/HEAD
TRIANGLE WITH A X INSIDE	ALLOY STEEL	CLOSE-TOLERANCE SHANK/HEAD, 125,000 TO 145,000 PSI
	ALUMINUM ALLOY	TS: 62,000 PSI MIN

Figure 7-1. Bolt head markings

Downloaded from http://www.everyspec.com

Table 7-1. Close tolerance, hexagon-head bolts

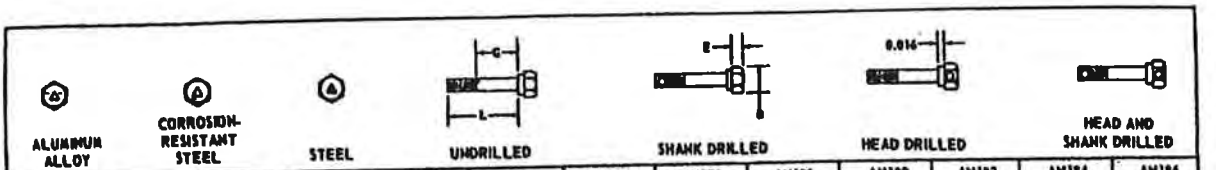

BOLT SIZE		AN173 (10-32)		AN174 (1/4-28)		AN175 (5/16-24)		AN176 (3/8-24)		AN177 (7/16-20)		AN178 (1/2-20)		AN179 (9/16-18)		AN180 (5/8-18)		AN182 (3/4-16)		AN184 (7/8-14)		AN186 (1-14)	
B		0.375		0.438		0.500		0.563		0.625		0.750		0.875		0.938		1.063		1.250		1.438	
E		1/8		3/32		3/16		7/32		1/4		9/32		5/16		11/32		13/32		15/32		17/32	
SHANK DIAMETER		+0.0000 0.1894 -0.0005		+0.0000 0.2492 -0.0005		+0.0000 0.3117 -0.0005		+0.0000 0.3742 -0.0005		+0.0000 0.4367 -0.0005		+0.0000 0.4991 -0.0005		+0.0000 0.5616 -0.0005		+0.0000 0.6240 -0.0006		+0.0000 0.7488 -0.0007		+0.0000 0.8737 -0.0008		+0.0000 0.9985 -0.0010	
DRILL DIAMETER	HEAD	NO. 56 (0.046)		NO. 56 (0.046)		NO. 50 (0.070)		NO. 50 (0.070)		NO. 50 (0.070)		NO. 50 (0.070)		NO. 50 (0.070)		NO. 50 (0.070)		NO. 50 (0.070)		NO. 50 (0.070)		NO. 50 (0.070)	
	COTTER	NO. 50 (0.070)		NO. 48 (0.076)		NO. 48 (0.076)		NO. 36 (0.106)		NO. 36 (0.106)		NO. 36 (0.106)		NO. 28 (0.141)		NO. 28 (0.141)		NO. 28 (0.141)		NO. 28 (0.141)		NO. 28 (0.141)	
STEEL BOLTS	TENSILE STRENGTH (LB)	2210		4000		6500		10100		13600		18500		23600		30100		40800		60000		80700	
	SHEAR STRENGTH	2125		3680		5750		8200		11250		14700		18700		23000		33150		45050		58100	
2024 ALLOY BOLTS	TENSILE STRENGTH (LB)	1100		2030		3230		5020		6750		9100		11700		14900		21800		29600		40000	
	SHEAR STRENGTH	990		1715		2685		3870		5250		6850		8700		10750		15500		21050		27500	
DASH NUMBERS (SEE NOTE 1)		L	G	L	G	L	G	L	G	L	G	L	G	L	G	L	G	L	G	L	G	L	G
-3		15/32	1/16	15/32	1/16																		
-4		17/32	1/8	17/32	1/16	19/32	1/16																
-5		21/32	1/4	21/32	3/16	23/32	3/16	45/64	1/16	27/32	1/16												
-6		25/32	3/8	25/32	5/16	27/32	5/16	53/64	3/16	27/32	3/16	27/32	1/16	31/32	1/16								
-7		29/32	1/2	29/32	7/16	31/32	7/16	61/64	5/16	31/32	5/16	31/32	3/16	1-1/32	1/8	1-1/64	1/16						
-10		1-1/32	5/8	1-1/32	9/16	1-3/32	9/16	1-3/64	7/16	1-3/32	7/16	1-3/32	5/16	1-5/32	1/4	1-9/64	3/16	1-5/32	1/16				
-11		1-5/32	3/4	1-5/32	11/16	1-7/32	11/16	1-13/64	9/16	1-7/32	9/16	1-7/32	7/16	1-9/32	3/8	1-17/64	5/16	1-9/32	3/16	1-5/16	1/16		
-12		1-9/32	7/8	1-9/32	13/16	1-11/32	13/16	1-21/64	11/16	1-11/32	11/16	1-11/32	9/16	1-13/32	1/2	1-25/64	7/16	1-13/32	5/16	1-7/16	3/16	1-1/2	1/8
-13		1-13/32	1	1-13/32	15/16	1-15/32	15/16	1-29/64	13/16	1-15/32	13/16	1-15/32	11/16	1-17/32	5/8	1-33/64	9/16	1-17/32	7/16	1-9/16	5/16	1-5/8	1/4
-14		1-17/32	1-1/8	1-17/32	1-1/16	1-19/32	1-1/16	1-37/64	15/16	1-19/32	15/16	1-19/32	13/16	1-21/32	3/4	1-41/64	11/16	1-21/32	9/16	1-11/16	7/16	1-3/4	3/8
-15		1-21/32	1-1/4	1-21/32	1-3/16	1-23/32	1-3/16	1-45/64	1-1/16	1-23/32	1-1/16	1-23/32	15/16	1-25/32	7/8	1-49/64	13/16	1-25/32	11/16	1-13/16	9/16	1-7/8	1/2
-16		1-25/32	1-3/8	1-25/32	1-5/16	1-27/32	1-5/16	1-53/64	1-3/16	1-27/32	1-3/16	1-27/32	1-1/16	1-29/32	1	1-57/64	15/16	1-29/32	13/16	1-15/16	11/16	2	5/8
-17		1-29/32	1-1/2	1-29/32	1-7/16	1-31/32	1-7/16	1-61/64	1-5/16	1-31/32	1-5/16	1-31/32	1-3/16	2-1/32	1-1/8	2-1/64	1-1/16	2-1/32	15/16	2-1/16	13/16	2-1/8	3/4
-20		2-1/32	1-5/8	2-1/32	1-9/16	2-3/32	1-9/16	2-5/64	1-7/16	2-3/32	1-7/16	2-3/32	1-5/16	2-5/32	1-1/4	2-9/64	1-3/16	2-5/32	1-1/16	2-3/16	15/16	2-1/4	7/8

NOTES: 1. FOR BOLTS OF LONGER GRIP AND LENGTH (-21 THROUGH -80) REFER TO AN AERONAUTICAL STANDARD DRAWINGS.
2. DIMENSIONS SHOWN ARE IN INCHES.

Close-Tolerance Bolts

These bolts include close-tolerance, hexagon-head bolts, AN173 through AN186, and close-tolerance, 100° countersunk bolts, NAS334 through NAS340. They are used in aircraft fabrication where bolted joints are subject to severe load reversals and vibration. The bolt shanks are made to close tolerance, permitting a very close fit using reamers. Standard AN hexagon-head bolts are otherwise identical and may be used for the same applications, provided a light-drive fit is made. A light-drive fit may be considered an interference fit of 0.0006 inch for a 5/8-inch diameter bolt; other sizes are proportional. Such bolts are used to eliminate loss of motion in control systems. Close-tolerance, hexagon-head bolts, AN173 through AN186, are identified in Table 7-1 above, and close-tolerance, 100o countersunk bolts are identified in Table 7-2. Use an internal hexagon-, Phillips recess-, or Frearson recess-type wrench to turn these 100° countersunk bolts.

Section II. Nuts

IDENTIFICATION

Aircraft nuts come in many shapes and sizes. They are made of cadmium-plated carbon steel; corrosion-resistant steel, brass, or anodized 2024T aluminum alloy; and have either right- or left-hand threads.

Nuts are ordered separately and have no identifying marks or letters. They are identified by the characteristic metallic luster or color of the aluminum, brass, or fiber they are made of, by their construction, or by their thread size.

Except for a few special types, nearly all aircraft nuts are AN standard. In stock lists, part numbers designate the type of nut. The common types and the respective part numbers are--

- Plain, AN315 and AN335.
- Castellated, AN310.

Downloaded from http://www.everyspec.com

Table 7-2. Close-tolerance, 100° countersunk bolts

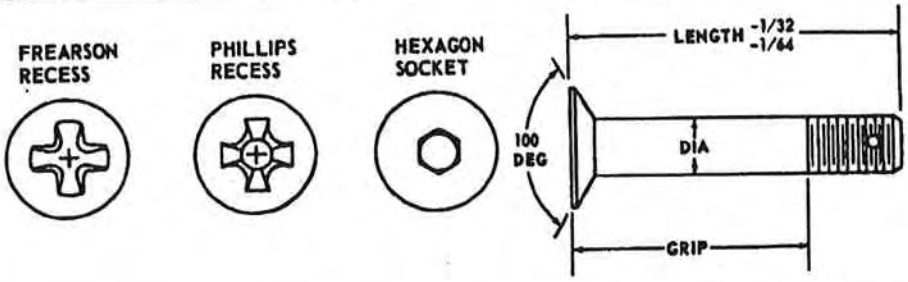

NAS NUMBERS	NAS334	NAS335	NAS336	NAS337	NAS338	NAS339	NAS340
SIZE AND THREAD	1/4-28	5/16-24	3/8-24	7/16-20	1/2-20	9/16-18	5/8-18
DIAMETER	-0.0000 0.2492 -0.0005	-0.0000 0.3117 -0.0005	-0.0000 0.3742 -0.0005	-0.0000 0.4367 -0.0005	+0.0000 0.4991 -0.0005	+0.0000 0.5616 -0.0005	+0.0000 0.6240 -0.0006
TENSILE STRENGTH (LB)	4080	6500	10100	13600	18500	23600	30100
SHEAR STRENGTH (LB)	3680	5750	8280	11250	14700	18700	23000

NOTES:

1. EXAMPLES OF PART NUMBERS:
   NAS334-23 = BOLT, 1-15/16 INCH GRIP, 2-13/32 INCH LENGTH, DRILLED.
   NAS334-23A = BOLT, 1-15/16 INCH GRIP, 2-13/32 INCH LENGTH, UNDRILLED.
2. MATERIAL: 2330 NICKEL STEEL
3. DIMENSIONS SHOWN ARE IN INCHES.

- Plain check, AN316.
- Light hexagon, AN340 and AN345.
- Castellated shear, AN320.
- Patented, self-locking, MS20363 through MS20367.
- Wingnut, AN350.

CODING

Letters and digits following the part number indicate items such as material, size, threads per inch, and right- or left-hand threads. The letter B following the part number stands for brass; D for 2017T aluminum alloy; DD for 2024T aluminum alloy; C for stainless steel; and in the case of a dash instead of a letter cadmium-plated carbon steel.

The one or two digits following the dash or the material code letter represent the dash number of the nut and indicate the size of the shank and threads per inch of the bolt that the nut fits on. The dash number corresponds to the first figure appearing in the part number coding of general-purpose bolts. For example, a dash number of 3 indicates that the nut will fit an AN3 bolt (10-32); 4 that it will fit in an AN4 bolt (1/4-28); 5 that it will fit an AN5 bolt (5/16-24); and so on.

The code numbers for self-locking nuts end in three- or four-digit numbers. The last two digits indicate threads per inch, and the one or two digits preceding them stand for the nut size in sixteenths of an inch.

As an example of the code numbers used to order aircraft nuts, assume that a nut is needed to fit a 1/4-inch bolt. A plain nut and a check nut made of corrosion-resistant steel with 28 threads per inch are required. Both nuts will have right-hand threads. Determine the code number to order these nuts as follows:

- AN315 or AN335--plain nut part number
  - C--stainless steel (corrosion-resisting)
  - 4(4/16)--1/4-28 screw and thread size
  - R--right-hand thread

The complete code number for ordering the plain nut is AN315C4R.

Downloaded from http://www.everyspec.com

- AN316--check nut part number
  - C--stainless steel (corrosion-resisting)
  - 4(4/16)--1/4-28 screw and thread size
  - R--right-hand thread

The complete code number for ordering the check nut is AN316C4R.

The following are examples of some other common nuts and their code numbers:

- Code number AN310DD5R
  - AN310--aircraft castle nut
  - DD--2024T aluminum alloy
  - 5--5/16-inch diameter
  - R--right-hand thread (usually 24 threads per inch)
- Code number AN320-10
  - AN320--aircraft castellated shear nut 9 dash (-)--cadmium-plated carbon steel
  - 10--5/8-inch diameter (usually right-hand thread, 18 threads per inch)
- Code number AN350B1032
  - AN350--aircraft wingnut
  - B--brass
  - 10--number 10 bolts
  - 32--threads per inch

TYPES AND APPLICATIONS

Aircraft nuts may be divided into two general groups: non-self-locking nuts, which must be safetied by external- locking devices, such as lock-nuts, cotter pins, or safety wire; and self-locking nuts, which contain the locking feature as an integral part. Only a few of the various types of nuts will be discussed in this section. For more information, refer to TM 55-1500-204-25/1 and TO 1-1A-8.

Non-Self-Locking Nuts

AN310 airframe castellated nuts (Table 7-3) are used in conjunction with drilled-shank, AN, hexagon-head bolts; clevis bolts; eyebolts; drilled head bolts; or studs. They are fairly rugged and can withstand large tensional loads. The slots in the nut, called castellations, are designed to accommodate a cotter pin or external locking device, such as safety wire for safetying purposes.

Self-Locking Nuts

Two general types of these nuts are in current use: the all-metal and nonmetallic insert (fiber or nylon). As their names indicate, each type gets its locking capability differently. Both standard all-metal and nonmetallic insert, self-locking nuts are shown in Tables 7-4 and 7-5.

All Metal

The all-metal type of self-locking nut depends on the metal's ability to recover its size and shape when the locking action and the load-carrying portion are engaged by bolt or screw threads. This nut holds tight despite severe vibrations and can be used several times before being replaced.

Nonmetallic Insert

Nonmetallic insert, self-locking nuts depend on fiber or nylon inserts integrated with the inside diameter of the nut for their locking action. When a screw or bolt is installed, the insert stretches and makes contact with the bolt or screw threads. This produces the locking action. Bolts, studs, or screws of 5/16 diameter and larger that have cotter pin holes are free from burrs. Burrs tend to tear the nonmetallic insert, making it unusable as a locking device. Bolts, studs, and screws of 1/4-inch diameter and smaller that have cotter pin holes may only be used with nonmetallic insert, self-locking nuts in an emergency. Replace these nuts as soon as possible with the specified type. Before reusing a nonmetallic insert, self-locking nut of 1/2-inch diameter or less, test it for minimum prevailing torque by trying to insert a matching screw or bolt by hand. Reuse only those nuts that cannot be tightened with your fingers after the insert engages the bolt or stud. Test nuts of greater than 1/2-inch diameter for minimum prevailing torque using the values specified in Table 7-6. Do not subject nonmetallic insert, self-locking nuts to temperatures above 250°F (121°C).

CAUTION

Do not reuse self-locking nuts for critical applications; refer to TM 55-1500-204-25/1.

Plate Nuts

These nuts are also called anchor nuts or nut plates. The different shapes and types of these fasteners are shown in Figures 7-2 through 7-24. These fasteners are mounted on a plate, riveted into a fixed location,

Downloaded from http://www.everyspec.com

used for blind mounting in inaccessible areas, and used to simplify maintenance. They are available in a wide range of sizes and shapes, such as one-lug, two-lug, right-angle, and floating nut plates, to match the specific physical requirements of the individual nut's location. They are usually self-locking and designed to provide just enough movement to compensate for misalignment of the subassembly.

NOTE: The illustrations and information in Figures 7-2 through 7-24 are supplied by the Cherry Division of Textron Inc., Santa Ana, CA.

Table 7-3. AN310 castellated nuts

PART NUMBERS		SIZE AND THREAD (NF-3)
STEEL	ALUMINUM ALLOY	
AN310-3	AN310D3	NO 10-32
AN310-4	AN310D4	1/4-28
AN310-5	AN310D5	5/16-24
AN310-6	AN310D6	3/8-24
AN310-7	AN310D6	7/16-20
AN310-8	AN310D8	1/2-20
AN310-9	AN310D9	9/16-18
AN310-10	AN310D10	5/8-18
AN310-12	AN310D12	3/4-16
AN310-14	AN310D14	7/8-14
AN310-16	AN310D16	1-14
AN310-18	AN310D18	1-1/8-12
AN310-20	AN310D20	1-1/4-12

NOTES:

1. Add C before dash number for corrosion-resistant steel nuts.
2. Examples of part numbers:

   AN310-5 = 5/16-24 steel nut
   AN310D5 = 5/16-24 aluminum alloy nut
   AN310C5 = 5/16-24 corrosion-resistant steel nut

3. Dimensions are shown in inches.

Downloaded from http://www.everyspec.com

Table 7-4. MS20364 self-locking nuts

STEEL	BRASS	ALUMINUM ALLOY	SIZE AND THREAD
FINE THREAD			
MS20364-1032	MS20364B1032	MS20364D1032	NO. 10-32
MS20364-428	MS20364B428	MS20364D428	1/4-28
MS20364-524	MS20364B524	MS20364D524	5/16-24
MS20364-624	MS20364B624	MS20364D624	3/8-24
MS20364-720	MS20364B720	MS20364D720	7/16-20
MS20364-820	MS20364B820	MS20364D820	1/2-20
MS20364-918	MS20364B918	MS20364D918	9/16-18
MS20364-1018	MS20364B1018	MS20364D1018	5/8-18
MS20364-1216	MS20364B1216	MS20364D1216	3/4-16
MS20364-1414	MS20364B1414	MS20364B1414	7/8-14
MS20364-1614	MS20364B1614	MS20364D1614	1-14
MS20364-1812	MS20364B1812	MS20364D1812	1-1/8-12
MS20364-2012	MS20364B2012	MS20364D2012	1-1/4-12
COARSE THREAD			
MS20364-632		MS20364D632	NO. 6-32
MS20364-832		MS20364D832	NO. 8-32

NOTES:

1. ADD A AFTER DASH NUMBER FOR NUTS HAVING NONMETALLIC INSERTS.
2. ADD C AFTER DASH NUMBER FOR NUTS FABRICATED ENTIRELY FROM METAL.
3. EXAMPLES OF PART NUMBERS:

   MS20364-428 – 1/4-28 STEEL NUT, EITHER ALL METAL OR WITH NONMETALLIC INSERT.

   MS20364D428 – 1/4-28 ALUMINUM ALLOY NUT, EITHER ALL METAL OR WITH NONMETALLIC INSERT.

   MS20364B428A – 1/4-28 COPPER BASE ALLOY NUT WITH NONMETALLIC INSERT.

   MS20364-428C – 1/4-28 STEEL NUT, ALL METAL.
4. DIMENSIONS SHOWN ARE IN INCHES.

Downloaded from http://www.everyspec.com

Table 7-5. MS20365 self-locking nuts

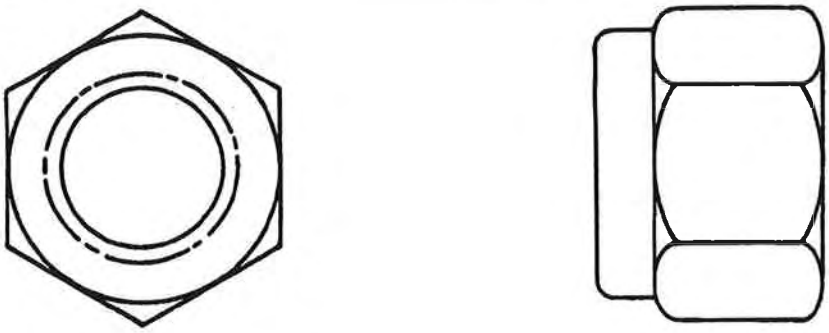

STEEL	BRASS	ALUMINUM ALLOY	
FINE THREAD			SIZE AND THREAD
MS20365-1032	MS20365B1032	MS20365D1032	NO. 10-32
MS20365-428	MS20365B428	MS20365D428	1/4-28
MS20365-524	MS20365B524	MS20365D524	5/16-24
MS20365-624	MS20365B624	MS20365D624	3/8-24
MS20365-720	MS20365B720	MS20365D720	7/16-20
MS20365-820	MS20365B820	MS20365D820	1/2-20
MS20365-918	MS20365B918	MS20365D918	9/16-18
MS20365-1018	MS20365B1018	MS20365D1018	5/8-18
MS20365-1216	MS20365B1216	MS20365D1216	3/4-16
MS20365-1414	MS20365B1414	MS20365D1414	7/8-14
MS20365-1614	MS20365B1614	MS20365D1614	1-14
MS20365-1812	MS20365B1812	MS20365D1812	1-1/8-12
MS20365-2012	MS20365B2012	MS20365D2012	1-1/4-12
COARSE THREAD			SIZE AND THREAD
MS20365-440	MS20365B440	MS20365D440	NO. 4-40
MS20365-632	MS20365B632	MS20365D632	NO. 6-32
MS20365-832	MS20365B832	MS20365D832	NO. 8-32

NOTES:

1. ADD A AFTER DASH NUMBER FOR NUTS HAVING NONMETALLIC INSERTS.
2. ADD C AFTER DASH NUMBER FOR NUTS FABRICATED ENTIRELY FROM METAL.
3. EXAMPLES OF PART NUMBERS:
   - MS20365-428 = 1/4-28 STEEL NUT, EITHER ALL METAL OR WITH NONMETALLIC INSERT.
   - MS20365D428 = 1/4-28 ALUMINUM ALLOY NUT, EITHER ALL METAL OR WITH NONMETALLIC INSERT.
   - MS20365B428A = 1/4-28 COPPER BASEALLOY NUT WITH NONMETALLIC INSERT.
   - MS20365-428C = 1/4-28 STEEL NUT, ALL METAL.
4. DIMENSIONS SHOWN ARE IN INCHES.

Downloaded from http://www.everyspec.com

Table 7-6. Minimum prevailing torque values for used self-locking nuts of more than 1-2-inch diameter

NUT SIZE	MINIMUM PREVAILING TORQUE* (INCH-POUNDS)	NUT SIZE	MINIMUM PREVAILING TORQUE* (INCH-POUNDS)
Fine Thread		Coarse Thread	
9/16-18	13	9/16-12	14
5/8-18	18	5/8-11	18
3/4-16	27	3/4-10	27
7/8-14	40	7/8-9	38
1-14	55	1-8	51
1-1/8-12	73	1-1/8-8	68
1-1/4-12	94	1-1/4-8	88

*Reading established when bolt or stud fully engages insert.

Downloaded from http://www.everyspec.com

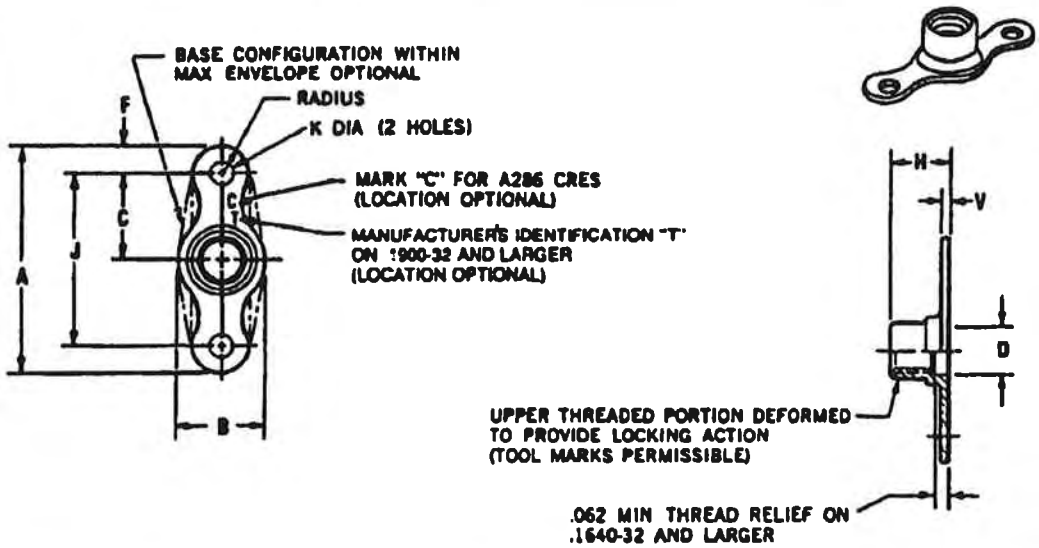

CHERRY PART NUMBER			THREAD SIZE (1)	A	B	C	D	F	H (3)	J (5)	K (4)	V	APPROX WT PER 100 PCS
STEEL 450°F	CRES 450°F	CRES 800°F		MAX		±.005	MIN	MIN	MAX	±.002	+.005 −.000	MAX	
T2S440	T2C440M	T2C440	.1120 - 40 UNJC - 3B	.948	.260 .195	.344	–	.100	.143	.688	.098	.047	.10
T2S632	T2C632M	T2C632	.1380 - 32 UNJC - 3B	.948	.265 .239	.344	–	.100	.171	.688	.098	.047	.14
T2S832	T2C832M	T2C832	.1640 - 32 UNJC - 3B	.948	.297 .277	.344	.168	.100	.250	.688	.098	.047	.19
T2S1032	T2C1032M	T2C1032	.1900 - 32 UNJF - 3B	.948	.328 .308	.344	.194	.100	.250	.688	.098	.047	.20
T2S428	T2C428M	T2C428	.2500 - 28 UNJF - 3B	1.260	.414 .375	.500	.254	.100	.281	1.000	.098	.055	.40
T2S524	T2C524M	T2C524	.3125 - 24 UNJF - 3B	1.282	.505 .485	.500	.317	.125	.328	1.000	.130	.065	.59
T2S624	T2C624M	T2C624	.3750 - 24 UNJF - 3B	1.282	.614 .594	.500	.378	.125	.344	1.000	.130	.075	1.06

MATERIAL ..... T2S — Carbon steel, heat treated Rc49 max
T2CM & T2C — Corrosion-resistant steel (A286), AMS5525, AMS5732, AMS5737

FINISH ..... T2S — Cadmium plated per QQ-P-416 plus dry film lubricant. (The type & class of cad is optional if nuts meet the salt spray requirements of QQ-P-416, Type II.)
T2CM — Dry film lubricant.
T2C — Silver plated per AMS2410 measured on external surface of nut shall not be less than .0002 inch. Threads shall show complete coverage but thickness is waived. No silver plate on weld nibs.

PROCUREMENT SPEC .. MIL-N-25027, NAS3350 (carbon steel only)

INTERCHANGEABILITY .. AN362, AN366, NAS680, NAS1021, MS21047, MS21048

NOTES ..... (1) Threads per MIL-S-8879 prior to the addition of dry film lubricant.
(2) Add suffix "CPC" to part number for cad plate per QQ-P-416, Type II, Class 2 without dry film lubricant (carbon steel only).
(3) Minimum "H" not specified, limited only by strength requirement of specification.
(4) For countersunk rivet holes, add suffix "BC" to part number. Example: T2S1032BC. For projection welding nibs add suffix "PWB" to part number. Example: T2C1032PWB.
(5) Center of tapped hole shall not deviate in any direction from the center of the plate nut, as determined by the rivet holes, by more than .005.
(6) Capped versions of these anchor nuts may be obtained.

Figure 7-2. T2S, T2CM, T2C anchor nut, two lug, 125,000 pounds per square inch

Downloaded from http://www.everyspec.com

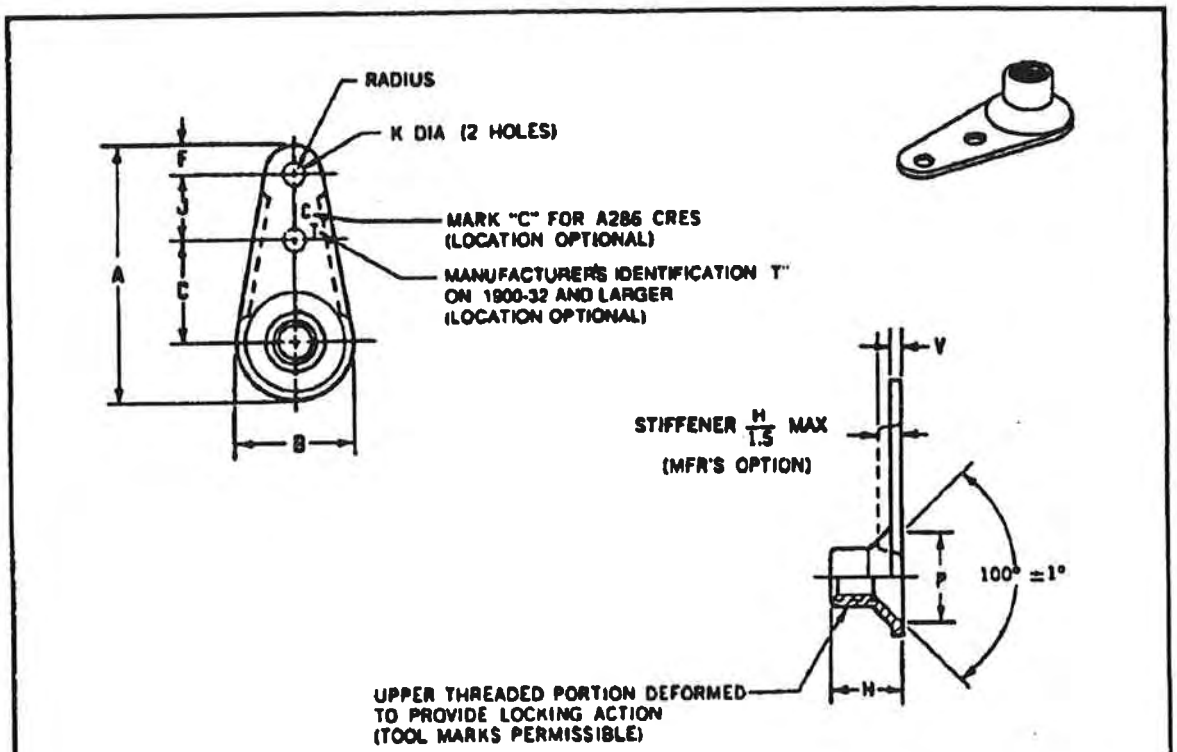

CHERRY PART NUMBER			THREAD SIZE (1)	A	B	C	F	H (3)	J (5)	K (4)	P	V	APPROX WT PER 100 PCS
STEEL 450°F	CRES 450°F	CRES 800°F		MAX		±.005	MIN	MAX	±.002	+.005 −.000	±.005	MAX	
T12SH832	T12CH832M	T12CH832	.1640 - 32 UNJC - 3B	.987	.422 .360	.344	.100	.272	.312	.098	.365	.047	.32
T12SH1032	T12CH1032M	T12CH1032	.1900 - 32 UNJF - 3B	1.013	.453 .406	.344	.100	.281	.312	.098	.411	.047	.34

MATERIAL ..... T12SH — Carbon steel, heat treated Rc49 max.
T12CHM & T12CH — Corrosion-resistant steel (A286), AMS5525, AMS5732, AMS5737.

FINISH ..... T12SH — Cadmium plated per QQ-P-416 plus dry film lubricant. (The type & class of cad is optional if nuts meet the salt spray requirements of QQ-P-416, Type II.)
T12CHM — Dry film lubricant.
T12CH — Silver plated per AMS2410 measured on external surface of nut shall not be less than .0002 inch. Threads shall show complete coverage but thickness is waived. No silver plate on weld nibs.

PROCUREMENT SPEC .. MIL-N-25027, NAS3350 (carbon steel only).

INTERCHANGEABILITY .. NAS683, NAS1026, MS21053, MS21054

NOTES .....
(1) Threads per MIL-S-8879 prior to the addition of dry film lubricant.
(2) Add suffix "CPC" to part number for cad plate per QQ-P-416, Type II, Class 2 without dry film lubricant (carbon steel only)
(3) Minimum "H" not specified, limited only by strength requirement of specification.
(4) For countersunk rivet holes, add suffix "BC" to part number. Example: T12SH1032BC. For projection welding nibs add suffix "PWB" to part number. Example: T12CH1032PWB.
(5) Center of tapped hole shall not deviate in any direction from the center of the plate nut, as determined by the rivet holes, by more than .005.

Figure 7-3. T12SH, T12CHM, T12CH anchor nut, one lug, 100° countersunk, 125,000 pounds per square inch

Downloaded from http://www.everyspec.com

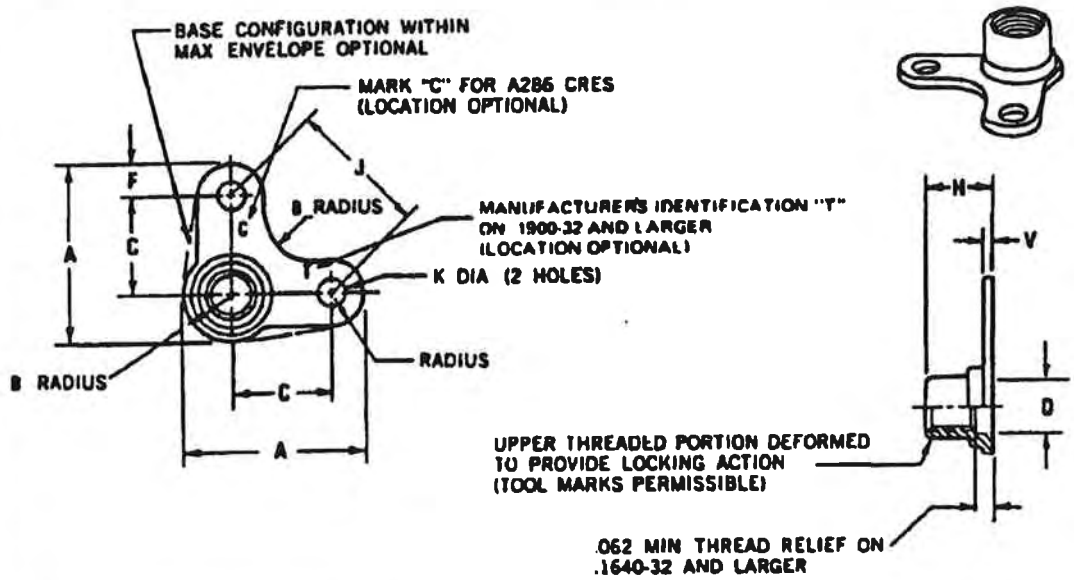

CHERRY PART NUMBER			THREAD SIZE (1)	A	B	C	D	F	H (3)	J (5)	K (4)	V	APPROX WT PER 100 PCS
STEEL 450°F	CRES 450°F	CRES 800°F		MAX		±.005	MIN	MIN	MAX	±.002	+.005 −.000	REF	
T7S632	T7C632M	T7C632	.1380 - 32 UNJC - 3B	.637	.133 .108	.344	–	.100	.171	.486	.098	.047	.17
T7S832	T7C832M	T7C832	.1640 - 32 UNJC - 3B	.637	.149 .125	.344	.168	.100	.250	.486	.098	.047	.22
T7S1032	T7C1032M	T7C1032	.1900 - 32 UNJF - 3B	.653	.164 .145	.344	.194	.100	.250	.486	.098	.047	.23
T7S428	T7C428M	T7C428	.2500 - 28 UNJF - 3B	.862	.207 .185	.500	.254	.100	.281	.707	.098	.055	.45
T7S524	T7C524M	T7C524	.3125 - 24 UNJF - 3B	.914	.248 .216	.500	.317	.125	.328	.707	.130	.065	.63
T7S624	T7C624M	T7C624	.3750 - 24 UNJF - 3B	.968	.307 .290	.500	.379	.125	.344	.707	.130	.075	1.08

MATERIAL ..... T7S — Carbon steel, heat treated Rc49 max.
T7CM & T7C — Corrosion-resistant steel (A286), AMS5525, AMS5732, AMS5737.

FINISH ..... T7S — Cadmium plated per QQ-P-416 plus dry film lubricant. (The type & class of cad is optional if nuts meet the salt spray requirements of QQ-P-416, Type II.)
T7CM — Dry film lubricant.
T7C — Silver plated per AMS2410 measured on external surface of nut shall not be less than .0002 inch. Threads shall show complete coverage but thickness is waived. No silver plate on weld nibs.

PROCUREMENT SPEC .. MIL-N-25027, NAS3350 (carbon steel only).

INTERCHANGEABILITY .. NAS684, NAS1027, MS21055, MS21056.

NOTES .....
(1) Threads per MIL-S-8879 prior to the addition of dry film lubricant.
(2) Add suffix "CPC" to part number for cad plate per QQ-P-416, Type II, Class 2 without dry film lubricant (carbon steel only).
(3) Minimum "H" not specified, limited only by strength requirement of specification.
(4) For countersunk rivet holes, add suffix "BC" to part number. Example: T7S1032BC. For projection welding nibs add suffix "PWB" to part number. Example: T7C1032PWB.
(5) Center of tapped hole shall not deviate in any direction from the center of the plate nut, as determined by the rivet holes, by more than .005.
(6) Capped versions of these anchor nuts may be obtained.

Figure 7-4. T7S, T7CM, T7C anchor nut, corner, 125,000 pounds per square inch

Downloaded from http://www.everyspec.com

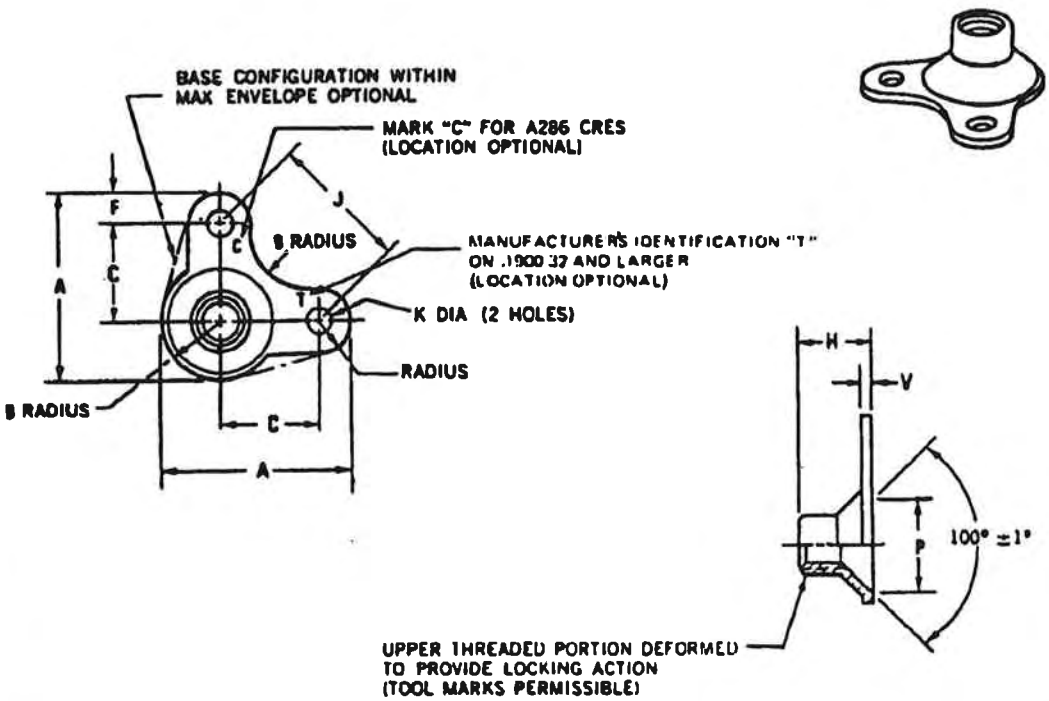

CHERRY PART NUMBER			THREAD SIZE (1)	A	B	C	F	H (3)	J (5)	K (4)	P	V	APPROX WT PER 100 PCS
STEEL 450°F (2)	CRES 450°F	CRES .800°F		MAX		±.005	MIN	MAX	±.002	+.005 −.000	±.005	MAX	
T7SH832	T7CH832M	T7CH832	.1640 - 32 UNJC - 3B	.700	.211 .180	.344	.100	.272	.486	.098	.365	.047	.27
T7SH1032	T7CH1032M	T7CH1032	.1900 - 32 UNJF - 3B	.716	.227 .203	.344	.100	.281	.486	.098	.411	.047	.27

MATERIAL ..... T7SH — Carbon steel, heat treated Rc49 max.
T7CHM & T7CH — Corrosion-resistant steel (A286). AMS5525 AMS5732. AMS5737.

FINISH ..... T7SH — Cadmium plated per QQ-P-416 plus dry film lubricant (The type & class of cad is optional if nuts meet the salt spray requirements of QQ-P-416, Type II.)
T7CHM — Dry film lubricant.
T7CH — Silver plated per AMS2410 measured on external surface of nut shall not be less than .0002 inch. Threads shall show complete coverage but thickness is waived. No silver plate on weld nibs.

PROCUREMENT SPEC .. MIL-N-25027, NAS3350 (carbon steel only).

INTERCHANGEABILITY .. NAS685, NAS1028, MS21057, MS21058.

NOTES ..... (1) Threads per MIL-S-8879 prior to the addition of dry film lubricant.
(2) Add suffix "CPC" to part number for cad plate per QQ-P-416, Type II, Class 2 without dry film lubricant (carbon steel only)
(3) Minimum "H" not specified, limited only by strength requirement of specification.
(4) For countersunk rivet holes, add suffix "BC" to part number Example: T7SH1032BC. For projection welding nibs add suffix "PWB" to part number. Example: T7CH1032PWB
(5) Center of tapped hole shall not deviate in any direction from the center of the plate nut, as determined by the rivet holes, by more than .005.

Figure 7-5. T7SH, T7CHM, T7CH anchor nut, corner, 100° countersunk, 125,000 pounds per square inch

Downloaded from http://www.everyspec.com

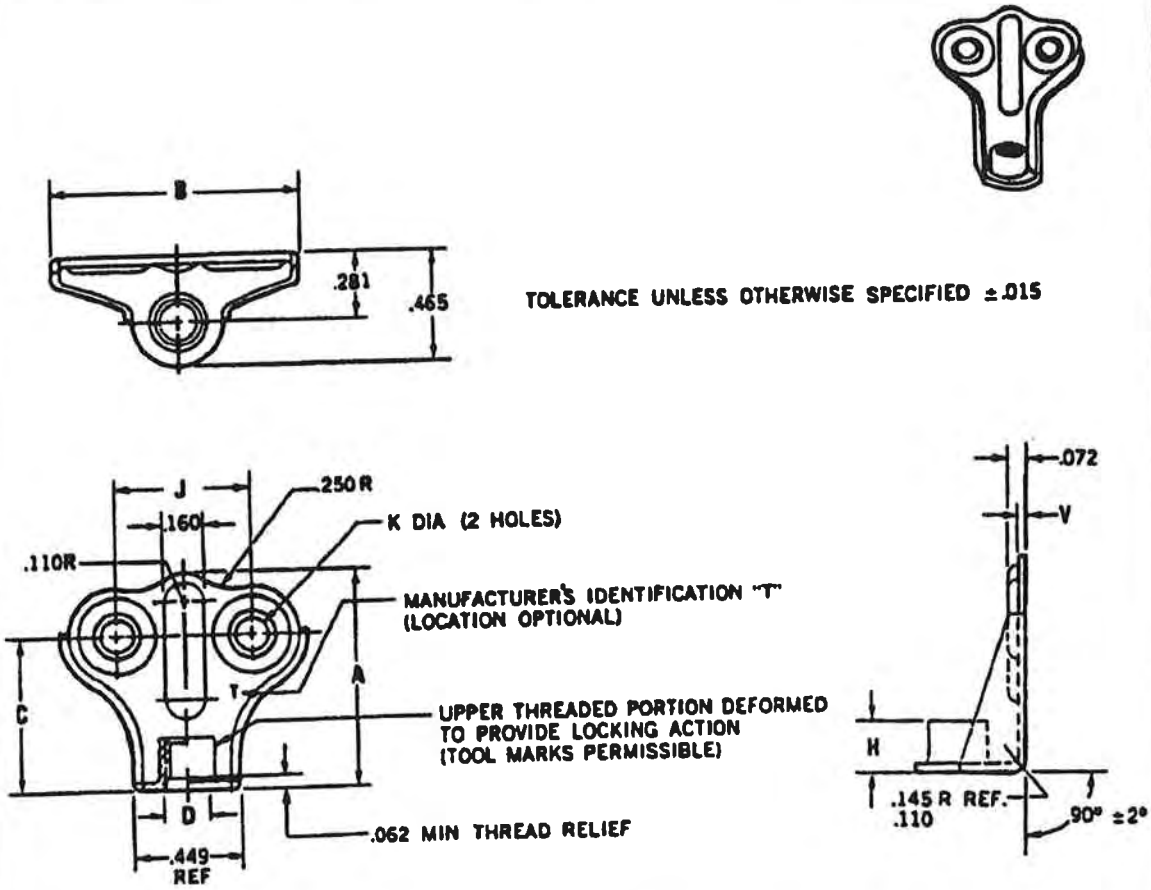

CHERRY PART NUMBER STEEL 450°F	THREAD SIZE (1)	A	B REF	C	D REF	H	J ±.002	K +.005 −.000	V +.005 −.000	APPROX WT PER 100 PCS
T8059S1032B-1	.1900-32 UNJF-3B	.745 .715	1.038	.465 .435	.194	.215 .185	.562	.130	.032	.50
T8059S1032B-2	.1900-32 UNJF-3B	.945 .915	1.038	.665 .635	.194	.215 .185	.562	.130	.032	.65
T8059S1032B-3	.1900-32 UNJF-3B	1.145 1.115	1.038	.865 .835	.194	.215 .185	.562	.130	.032	.80

MATERIAL ..... Carbon steel, heat treated Rc34-41.

FINISH ..... Cadmium plated per QQ-P-416 plus dry film lubricant. (The type & class of cad is optional if nuts meet the salt spray requirements of QQ-P-416, Type II)

PROCUREMENT SPEC .. MIL-N-25027, NAS3350.

NOTES ..... (1) Threads per MIL-S-8879 prior to the addition of dry film lubricant.
(2) Add suffix "CPC" to part number for cad plate per QQ-P-416, Type II, Class 2 without dry film lubricant.

Figure 7-6. T8059S anchor nut, high strength, right angle, 450°F, 125,000 pounds per square

Downloaded from http://www.everyspec.com

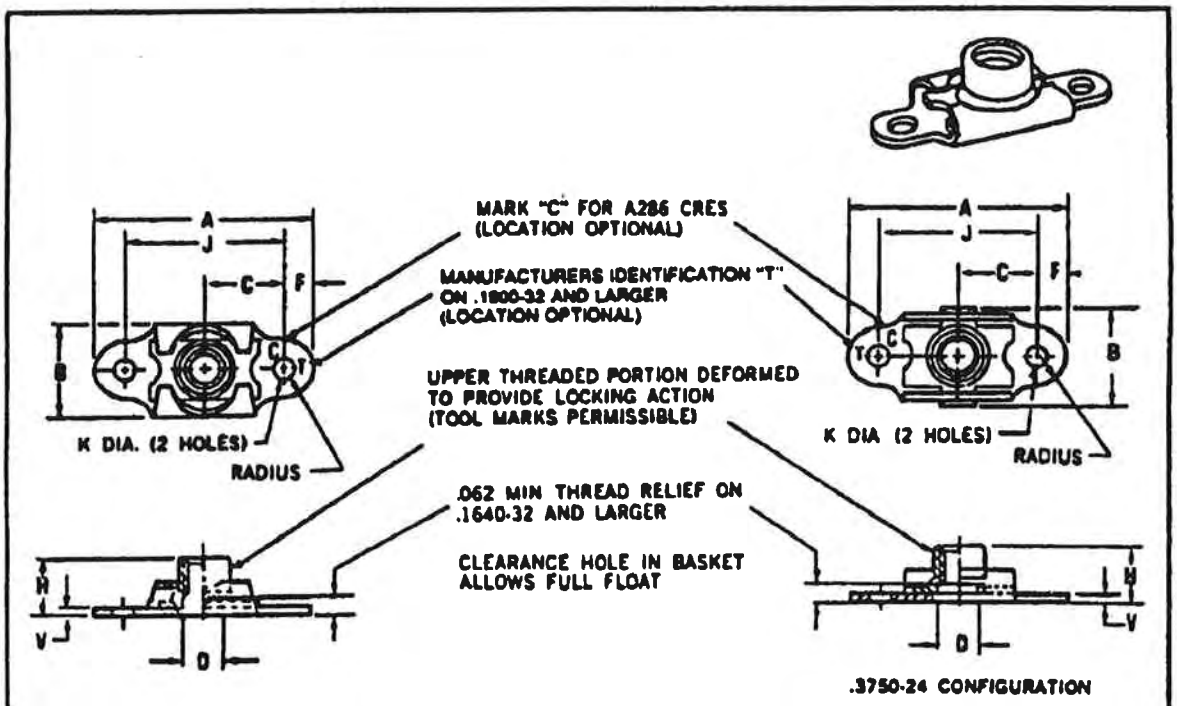

CHERRY PART NUMBER			THREAD SIZE (1)	A	B	C	D	F	H (3)	J	K (4)	V	APPROX WT PER 100 PCS
STEEL 450°F	CRES 450°F	CRES 800°F		MAX		±.005	MIN	MIN	MAX	±.002	+.005 -.000	MAX	
T65S440S	T65C440CM	T65C440C	.1120 - 40 UNJC - 3B	.948	.416 .290	.344	–	.100	.175	.688	.098	.032	.31
T65S632S	T65C632CM	T65C632C	.1380 - 32 UNJC - 3B	.948	.416 .290	.344	–	.100	.203	.688	.098	.032	.35
T65S832S	T65C832CM	T65C832C	.1640 - 32 UNJC - 3B	.948	.416 .290	.344	.168	.100	.250	.688	.098	.032	.36
T65S1032S	T65C1032CM	T65C1032C	.1900 - 32 UNJF - 3B	.948	.416 .290	.344	.194	.100	.250	.688	.098	.032	.38
T65S428S	T65C428CM	T65C428C	.2500 - 28 UNJF - 3B	1.292	.516 .350	.500	.254	.100	.281	1.000	.098	.032	.83
T65S524S	T65C524CM	T65C524C	.3125 - 24 UNJF - 3B	1.292	.609 .412	.500	.317	.125	.328	1.000	.130	.045	1.11
T65S624S	T65C624CM	T65C624C	.3750 - 24 UNJF - 3B	1.292	.688 .475	.500	.378	.125	.344	1.000	.130	.056	1.39

MATERIAL ..... T65S — Carbon steel, heat treated Rc40 max.
T65CM & T65C — Corrosion-resistant steel (A286), AMS5525, AMS5732, AMS5737

FINISH ..... T65S — Cadmium plated per QQ-P-416 plus dry film lubricant. (The type & class of cad is optional if nuts meet the salt spray requirements of QQ-P-416, Type II.) Dry film lubricant on basket is manufacturer's option.
T65CM — Nut — Dry film lubricant.
Basket — Passivated or dry film lubricant, manufacturer's option. No finish on weld nibs.
T65C — Nut — Silver plated per AMS2410 measured on external surface of nut shall not be less than .0002 inch. Threads shall show complete coverage but thickness is waived.
Basket — Passivated or silver plated, manufacturer's option. No silver plate on weld nibs.

PROCUREMENT SPEC .. MIL-N-25027, NAS3350 (carbon steel only).

INTERCHANGEABILITY .. NAS686, NAS1031, MS21058, MS21080.

NOTES ..... (1) Threads per MIL-S-8879 prior to the addition of dry film lubricant
(2) Add suffix "CPC" to part number for cad plate per QQ-P-416, Type II, Class 2 without dry film lubricant (carbon steel only).
(3) Minimum "H" not specified, limited only by strength requirement of specification.
(4) For countersunk rivet holes, add suffix "SC" to part number. Example: T65S1032SSC. For projection welding nibs add suffix "PWB" to part number. Example: T65C1032CPWB.
(5) Capped versions of these anchor nuts may be obtained
(6) Nut portion shall float not less than .030 radially from centered position and be capable of engaging bolt in maximum misaligned position

Figure 7-7. T65S, T65CM, T65C anchor nut, two lug, floating, 125,000 pounds per square inch

Downloaded from http://www.everyspec.com

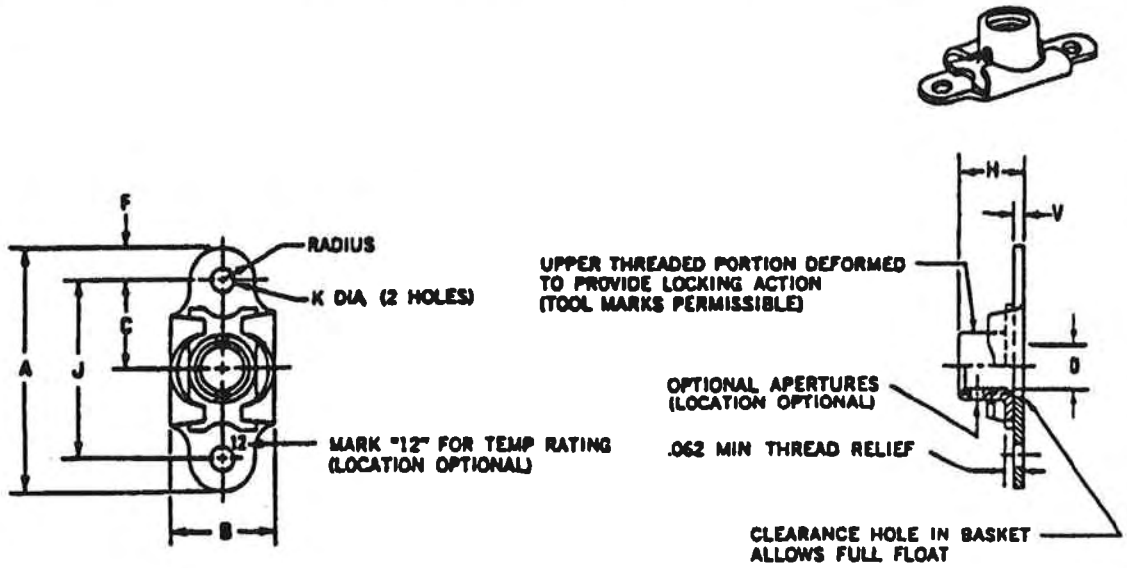

CHERRY PART NUMBER CRES 1200°F	THREAD SIZE (1)	A MAX	B MAX	C ±.005	D MIN	F MIN	H (2) MAX	J ±.002	K (3) +.005 −.000	V MAX	APPROX WT PER 100 PCS
LL65C1032C	.1900 - 32 UNJF - 3B	.970	.416	.344	.194	.100	.283	.688	.098	.032	.47
LL65C428C	.2500 - 28 UNJF - 3B	1.290	.516	.500	.254	.100	.361	1.000	.098	.032	.94

MATERIAL ..... Nut — Corrosion-resistant steel (AISI347FM), AMS5642.
Basket — Corrosion-resistant steel (AISI321), AMS5510.

FINISH ..... Nut — Silver plated per AMS2410 measured on external surface of nut shall not be less than .0002 inch. Threads shall show complete coverage but thickness is waived.
Basket — Passivated or silver plated, manufacturer's option. No silver plate on weld nibs.

PROCUREMENT SPEC .. MIL-N-7873.

NOTES ..... (1) Threads per MIL-S-8879.
(2) Minimum "H" not specified, limited only by strength requirement of specification.
(3) For countersunk rivet holes, add suffix "BC" to part number. Example: LL65C1032CBC. For projection welding nibs add suffix "PWB" to part number. Example: LL65C1032CPWB.
(4) Nut portion shall float not less than .030 radially from centered position and be capable of engaging bolt in maximum misaligned position.

Figure 7-9. LL65C anchor nut, two lug, floating, lightweight, high temperature, 1200°F

Downloaded from http://www.everyspec.com

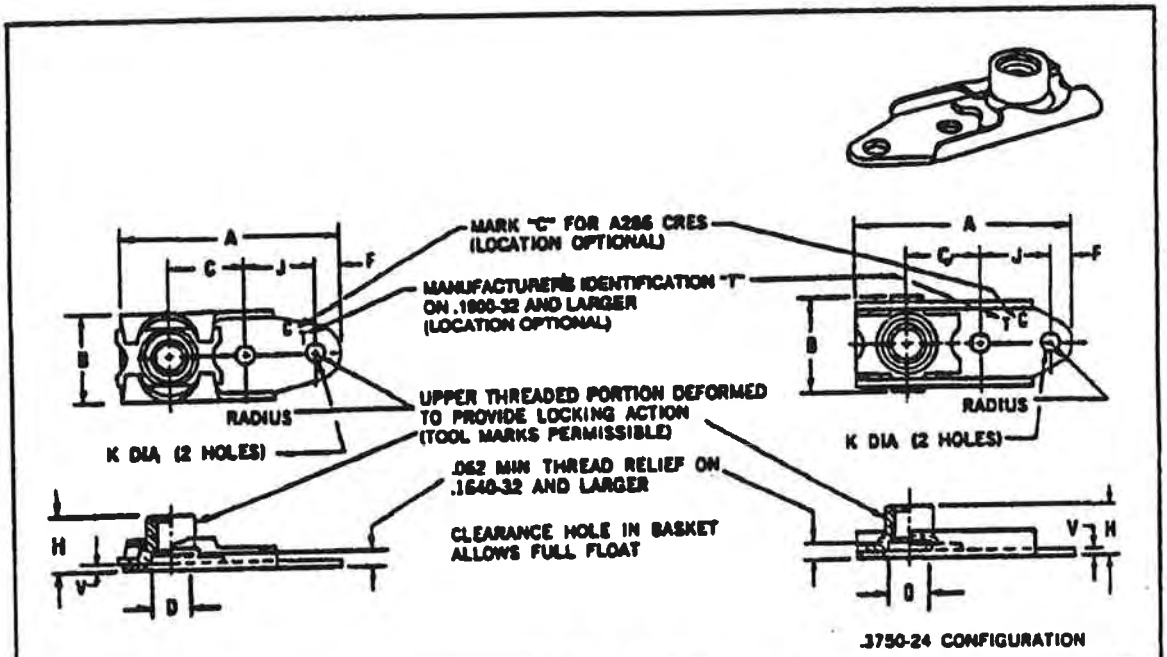

.3750-24 CONFIGURATION

CHERRY PART NUMBER			THREAD SIZE (1)	A MAX	B	C ±.005	D MIN	F MIN	H (3) MAX	J ±.002	K (4) +.005 -.000	V MAX	APPROX WT PER 100 PCS
STEEL 450°F	CRES 450°F	CRES 800°F											
T66S440S	T66C440CM	T66C440C	.1120 - 40 UNJC - 3B	1.051	.422 .290	.344	–	.100	.175	.312	.088	.032	.43
T66S632S	T66C632CM	T66C632C	.1380 - 32 UNJC - 3B	1.051	.422 .290	.344	–	.100	.203	.312	.088	.032	.44
T66S832S	T66C832CM	T66C832C	.1640 - 32 UNJC - 3B	1.051	.422 .290	.344	.169	.100	.250	.312	.088	.032	.45
T66S1032S	T66C1032CM	T66C1032C	.1900 - 32 UNJF - 3B	1.051	.422 .290	.344	..194	.100	.250	.312	.088	.032	.45
T66S428S	T66C428CM	T66C428C	.2500 - 28 UNJF - 3B	1.396	.631 .350	.508	.254	.100	.281	.312	.088	.032	.89
T66S524S	T66C524CM	T66C524C	.3125 - 24 UNJF - 3B	1.396	.641 .412	.508	.317	.125	.328	.312	.130	.045	1.20
T66S624S	T66C624CM	T66C624C	.3750 - 24 UNJF - 3B	1.396	.680 .451	.508	.379	.125	.344	.312	.130	.045	1.55

MATERIAL ..... T66S — Carbon steel, heat treated Rc40 max.
T66CM & T66C — Corrosion-resistant steel (A286), AMS5525, AMS5732, AMS5737.

FINISH ..... T66S — Cadmium plated per QQ-P-416 plus dry film lubricant. (The type & class of cad is optional if nuts meet the salt spray requirements of QQ-P-416, Type II.) Dry film lubricant on basket is manufacturers option
T66CM — Nut — Dry film lubricant
Basket — Passivated or dry film lubricant, manufacturer's option. No finish on weld ribs.
T66C — Nut — Silver plated per AMS2410 measured on external surface of nut shall not be less than .0002 inch. Threads shall show complete coverage but thickness is waived.
Basket — Passivated or silver plated, manufacturer's option. No silver plate on weld ribs

PROCUREMENT SPEC .. MIL-N-25027, NAS3350 (carbon steel only).

INTERCHANGEABILITY .. NAS687, NAS1032, MS21051, MS21052.

NOTES ..... (1) Threads per MIL-S-8879 prior to the addition of dry film lubricant.
(2) Add suffix "CPC" to part number for cad plate per QQ-P-416, Type II, Class 2 without dry film lubricant (carbon steel only).
(3) Minimum "H" not specified, limited only by strength requirement of specification
(4) For countersunk rivet holes, add suffix "BC" to part number. Example, T66S1032SBC. For projection welding ribs add suffix "PWB" to part number. Example: T66C1032CPWB.
(5) Capped versions of these anchor nuts may be obtained.
(6) Nut portion shall float not less than 6.30 radially from centered position and be capable of engaging bolt in maximum misaligned position.

Figure 7-8. T66S, T66CM, T66C anchor nut, one lug, floating, 125,000 pounds per square inch

Downloaded from http://www.everyspec.com

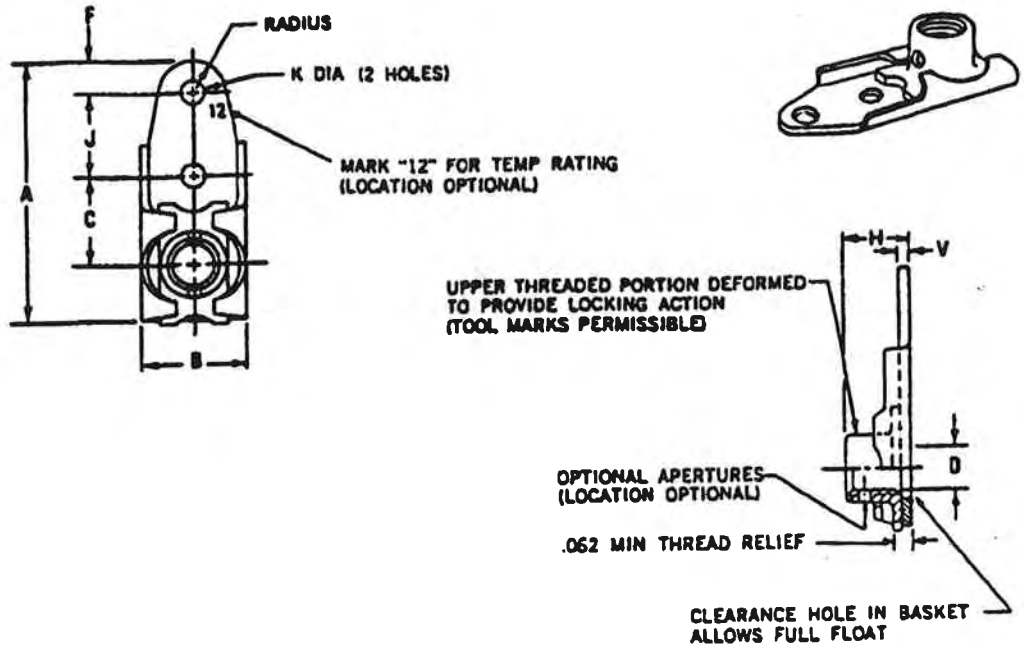

CHERRY PART NUMBER CRES 1200°F	THREAD SIZE (1)	A MAX	B MAX	C ±.005	D MIN	F MIN	H (2) MAX	J ±.002	K (3) +.005 −.000	V MAX	APPROX WT PER 100 PCS
LL66C1032C	.1900 - 32 UNJF - 3B	1.040	.416	.344	.184	.100	.283	.312	.098	.032	.55
LL66C428C	.2500 - 28 UNJF - 3B	1.300	.516	.508	.254	.100	.361	.312	.098	.032	1.03

MATERIAL ..... Nut — Corrosion-resistant steel (AISI347FM). AMS5642.
Basket — Corrosion-resistant steel (AISI321). AMS5510.

FINISH ..... Nut — Silver plated per AMS2410 measured on external surface of nut shall not be less than .0002 inch. Threads shall show complete coverage but thickness is waived.
Basket — Passivated or silver plated, manufacturer's option. No silver plate on weld nibs.

PROCUREMENT SPEC .. MIL-N-7873.

NOTES .....
(1) Threads per MIL-S-8879.
(2) Minimum "H" not specified, limited only by strength requirement of specification.
(3) For countersunk rivet holes, add suffix "BC" to part number. Example: LL66C1032CBC. For projection welding nibs add suffix "PWB" to part number. Example: LL66C1032CPWB.
(4) Nut portion shall float not less than .030 radially from centered position and be capable of engaging bolt in maximum misaligned position.

Figure 7-10. LL66C anchor nut, one lug, floating, lightweight, high temperature, 1200°F

Downloaded from http://www.everyspec.com

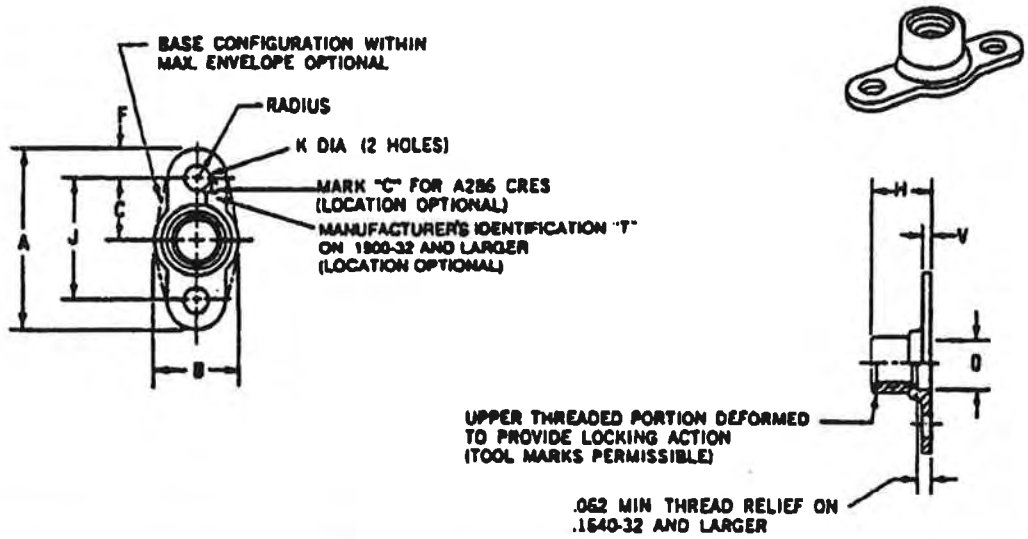

CHERRY PART NUMBER			THREAD SIZE (1)	A	B	C	D	F	H (3)	J (5)	K (4)	V	APPROX WT PER 100 PCS
STEEL 450°F	CRES 450°F	CRES 800°F		MAX		±.005	MIN	MIN	MAX	±.002	+.005 -.000	MAX	
MT2S440	MT2C440M	MT2C440	.1120 - 40 UNJC - 3B	.456	.184 .140	.148	—	.071	.143	.296	.086	.040	.05
MTL2S440	MTL2C440M	MTL2C440	.1120 - 40 UNJC - 3B	.630	.260 .140	.203	—	.089	.143	.406	.088	.040	.09
MT2S632	MT2C632M	MT2C632	.1380 - 32 UNJC - 3B	.503	.242 .195	.172	—	.071	.171	.343	.068	.047	.08
MTL2S632	MTL2C632M	MTL2C632	.1380 - 32 UNJC - 3B	.661	.265 .195	.218	—	.089	.171	.437	.098	.047	.13
MT2S832	MT2C832M	MT2C832	.1640 - 32 UNJC - 3B	.692	.297 .230	.234	.168	.100	.250	.468	.098	.047	.15
MT2S1032	MT2C1032M	MT2C1032	.1900 - 32 UNJF - 3B	.724	.328 .298	.250	.194	.100	.250	.500	.098	.047	.18
MT2S428	MT2C428M	MT2C428	.2500 - 28 UNJF - 3B	.786	.414 .380	.281	.254	.100	.281	.562	.098	.055	.33
MT2S524	MT2C524M	MT2C524	.3125 - 24 UNJF - 3B	1.006	.506 .475	.359	.317	.125	.328	.718	.130	.065	.54
MT2S624	MT2C624M	MT2C624	.3750 - 24 UNJF - 3B	1.116	.614 .580	.414	.378	.125	.344	.828	.130	.075	.95

MATERIAL ..... MT2S — Carbon steel, heat treated Rc49 max.
MT2CM & MT2C — Corrosion-resistant steel (A286), AMS5525, AMS5732, AMS5737.

FINISH ..... MT2S — Cadmium plated per QQ-P-416 plus dry film lubricant. (The type & class of cad is optional if nuts meet the salt spray requirements of QQ-P-416, Type II.)
MT2CM — Dry film lubricant.
MT2C — Silver plated per AMS2410 measured on external surface of nut shall not be less than .0002 inch. Threads shall show complete coverage but thickness is waived. No silver plate on weld nibs.

PROCUREMENT SPEC .. MIL-N-25027, NAS3350 (carbon steel only).

INTERCHANGEABILITY .. NAS697, MS21069, MS21070.

NOTES ..... (1) Threads per MIL-S-8879 prior to the addition of dry film lubricant.
(2) Add suffix "CPC" to part number for cad plate per QQ-P-416, Type II, Class 2 without dry film lubricant (carbon steel only).
(3) Minimum "H" not specified, limited only by strength requirement of specification.
(4) For countersunk rivet holes, add suffix "BC" to part number. Example: MT2S1032BC. For projection welding nibs add suffix "PWB" to part number. Example: MT2C1032PWB.
(5) Center of tapped hole shall not deviate in any direction from the center of the plate nut, as determined by the rivet holes, by more than .005.
(6) Capped versions of these anchor nuts may be obtained.

Figure 7-11. MT2S, MT2CM, MT2C anchor nut, reduced rivet spacing, two lug, 125,000 pounds per square inch

Downloaded from http://www.everyspec.com

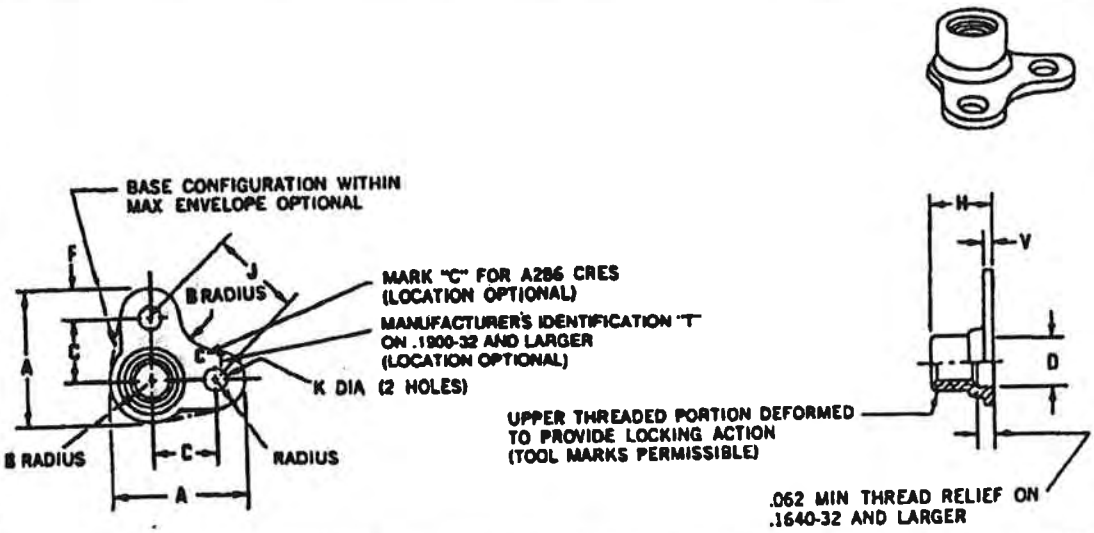

CHERRY PART NUMBER			THREAD SIZE (1)	A	B	C	D	F	H (3)	J (5)	K (4)	V	APPROX WT PER 100 PCS
STEEL 450°F	CRES 450°F	CRES 800°F		MAX		±.005	MIN	MIN	MAX	±.002	+.005 -.000	MAX	
MT7S440	MT7C440M	MT7C440	.1120 - 40 UNJC - 3B	.331	.097 .094	.148	—	.071	.143	.210	.066	.040	.05
MTL7S440	MTL7C440M	MTL7C440	.1120 - 40 UNJC - 3B	.448	.130 .096	.203	—	.069	.143	.287	.098	.040	.09
MT7S632	MT7C632M	MT7C632	.1380 - 32 UNJC - 3B	.379	.121 .118	.172	—	.071	.171	.243	.066	.047	.11
MTL7S632	MTL7C632M	MTL7C632	.1380 - 32 UNJC - 3B	.463	.132 .121	.218	—	.089	.171	.308	.098	.047	.16
MT7S832	MT7C832M	MT7C832	.1640 - 32 UNJC - 3B	.497	.148 .125	.234	.168	.100	.250	.331	.098	.047	.19
MT7S1032	MT7C1032M	MT7C1032	.1900 - 32 UNJF - 3B	.526	.164 .156	.250	.194	.100	.250	.354	.098	.047	.24
MT7S428	MT7C428M	MT7C428	.2500 - 28 UNJF - 3B	.603	.207 .200	.281	.254	.100	.281	.398	.098	.055	.33
MT7S524	MT7C524M	MT7C524	.3125 - 24 UNJF - 3B	.757	.252 .250	.359	.317	.125	.328	.508	.130	.065	.52
MT7S624	MT7C624M	MT7C624	.3750 - 24 UNJF - 3B	.870	.307 .305	.414	.379	.125	.344	.585	.130	.075	.95

MATERIAL ..... MT7S — Carbon steel, heat treated Rc49 max.
MT7CM & MT7C — Corrosion-resistant steel (A286), AMS5525, AMS5732, AMS5737.

FINISH ..... MT7S — Cadmium plated per QQ-P-416 plus dry film lubricant. (The type & class of cad is optional if nuts meet the salt spray requirements of QQ-P-416, Type II.)
MT7CM — Dry film lubricant.
MT7C — Silver plated per AMS2410 measured on external surface of nut shall not be less than .0002 inch. Threads shall show coverage but thickness is waived. No silver plate on weld nibs.

PROCUREMENT SPEC .. MIL-N-25027, NAS3350 (carbon steel only).

INTERCHANGEABILITY .. NAS698, MS21073, MS21074

NOTES ..... (1) Threads per MIL-S-8879 prior to the addition of dry film lubricant.
(2) Add suffix "CPC" to part number for cad plate per QQ-P-416, Type II, Class 2 without dry film lubricant (carbon steel only).
(3) Minimum "H" not specified, limited only by strength requirement of specification.
(4) For countersunk rivet holes, add suffix "BC" to part number. Example: MT7S1032BC. For projection welding nibs add suffix "PWB" to part number. Example: MT7C1032PWB.
(5) Center of tapped hole shall not deviate in any direction from the center of the plate nut, as determined by the rivet holes, by more than .005.
(6) Capped versions of these anchor nuts may be obtained.

Figure 7-12.. MT7S, MT7CM, MT7C anchor nut, reduced rivet spacing, corner, 125,000 pounds per square inch

Downloaded from http://www.everyspec.com

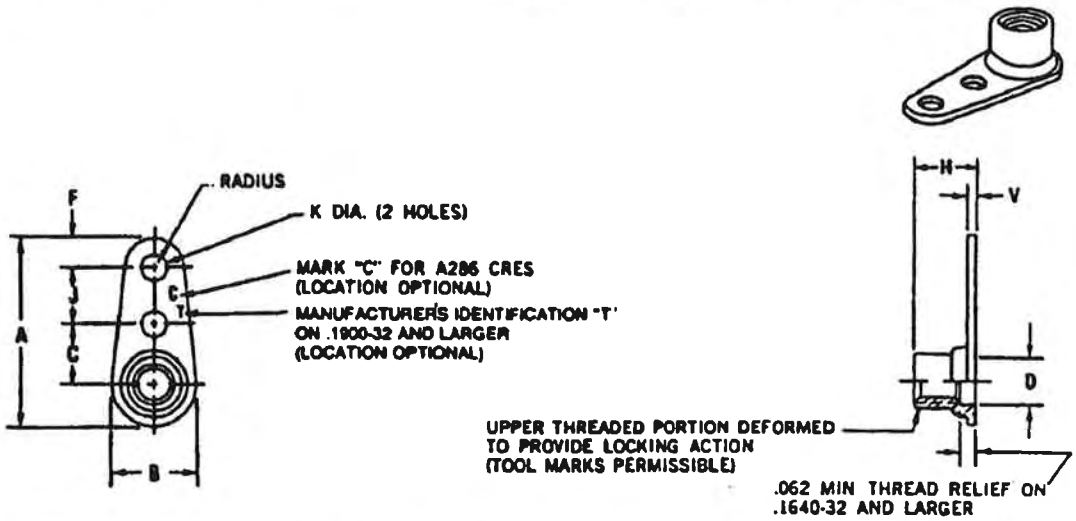

CHERRY PART NUMBER			THREAD SIZE (1)	A MAX	B	C ±.005	D MIN	F MIN	H (3) MAX	J (5) ±.002	K (4) +.005 −.000	V MAX	APPROX WT PER 100 PCS
STEEL 450°F	CRES 450°F	CRES 800°F											
MT12S440	MT12C440M	MT12C440	.1120 - 40 UNJC - 3B	.550	.194 .140	.148	—	.071	.143	.219	.066	.040	.06
MTL12S440	MTL12C440M	MTL12C440	.1120 - 40 UNJC - 3B	.667	.260 .140	.203	—	.089	.143	.219	.098	.040	.10
MT12S632	MT12C632M	MT12C632	.1380 - 32 UNJC - 3B	.598	.242 .195	.171	—	.071	.171	.219	.066	.047	.10
MTL12S632	MTL12C632M	MTL12C632	.1380 - 32 UNJC - 3B	.684	.265 .195	.218	—	.089	.171	.219	.098	.047	.13
MT12S832	MT12C832M	MT12C832	.1640 - 32 UNJC - 3B	.716	.297 .235	.234	.168	.100	.250	.219	.098	.047	.15
MT12S1032	MT12C1032M	MT12C1032	.1900 - 32 UNJF - 3B	.745	.328 .298	.250	.194	.100	.250	.219	.098	.047	.20
MT12S428	MT12C428M	MT12C428	.2500 - 28 UNJF - 3B	.822	.414 .380	.281	.254	.100	.281	.219	.098	.055	.37
MT12S524	MT12C524M	MT12C524	.3125 - 24 UNJF - 3B	1.026	.505 .475	.359	.317	.125	.328	.269	.130	.065	.58
MT12S624	MT12C624M	MT12C624	.3750 - 24 UNJF - 3B	1.139	.614 .580	.414	.379	.125	.344	.269	.130	.075	.80

MATERIAL ..... MT12S — Carbon steel, heat treated Rc49 max
MT12CM & MT12C — Corrosion-resistant steel (A286), AMS5525, AMS5732, AMS5737.

FINISH ..... MT12S — Cadmium plated per QQ-P-416 plus dry film lubricant (The type & class of cad is optional if nuts meet the salt spray requirements of QQ-P-416, Type II.)
MT12CM — Dry film lubricant.
MT12C — Silver plated per AMS2410 measured on external surface of nut shall not be less than .0002 inch. Threads shall show complete coverage but thickness is waived. No silver plate on weld nibs.

PROCUREMENT SPEC .. MIL-N-25027, NAS3350 (carbon steel only).

INTERCHANGEABILITY .. NAS696, MS21071, MS21072.

NOTES .....
(1) Threads per MIL-S-8879 prior to the addition of dry film lubricant
(2) Add suffix "CPC" to part number for cad plate per QQ-P-416, Type II, Class 2 without dry film lubricant (carbon steel only)
(3) Minimum "H" not specified, limited only by strength requirement of specification.
(4) For countersunk rivet holes, add suffix "BC" to part number. Example: MT12S1032BC. For projection welding nibs add suffix "PWB" to part number. Example: MT12C1032PWB.
(5) Center of tapped hole shall not deviate in any direction from the center of the plate nut, as determined by the rivet holes, by more than .005.
(6) Capped versions of these anchor nuts may be obtained.

Figure 7-13. MT12S, MT12CM, MT12C anchor nut, reduced rivet spacing, one lug, 125,000 pounds per square inch

Downloaded from http://www.everyspec.com

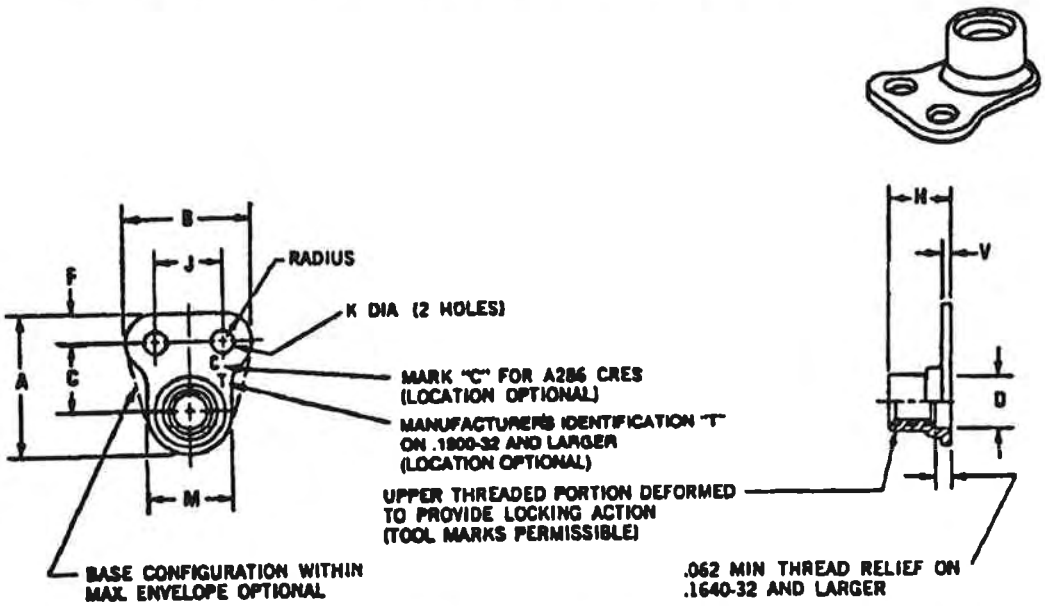

CHERRY PART NUMBER			THREAD SIZE (1)	A MAX	B MAX	C ±.005	D MIN	F MIN	H (3) MAX	J (5) ±.002	K (4) +.005 −.000	M	V MAX	APPROX WT PER 100 PCS
STEEL 450°F	CRES 450°F	CRES 800°F												
MT13S832	MT13C832M	MT13C832	.1640 - 32 UNJC - 3B	.486	.437	.234	.168	.100	.250	.219	.098	.297 .235	.047	.17
MT13S1032	MT13C1032M	MT13C1032	.1900 - 32 UNJF - 3B	.621	.437	.260	.184	.100	.250	.219	.098	.328 .298	.047	.18
MT13S428	MT13C428M	MT13C428	.2500 - 28 UNJF - 3B	.591	.437	.281	.254	.100	.281	.219	.098	.414 .380	.055	.37
MT13S524	MT13C524M	MT13C524	.3125 - 24 UNJF - 3B	.747	.537	.359	.317	.125	.328	.269	.130	.506 .475	.065	.54
MT13S624	MT13C624M	MT13C624	.3750 - 24 UNJF - 3B	.856	.537	.414	.379	.125	.344	.269	.130	.614 .580	.075	.74

MATERIAL ..... MT13S — Carbon steel, heat treated Rc49 max.
MT13CM & MT13C — Corrosion-resistant steel (A286), AMS5525, AMS5732, AMS5737.

FINISH ..... MT13S — Cadmium plated per QQ-P-416 plus dry film lubricant. (The type & class of cad is optional if nuts meet the salt spray requirements of QQ-P-416, Type II.)
MT13CM — Dry film lubricant.
MT13C — Silver plated per AMS2410 measured on external surface of nut shall not be less than .0002 inch. Threads shall show complete coverage but thickness is waived. No silver plate on weld nibs.

PROCUREMENT SPEC .. MIL-N-25027, NAS3350 (carbon steel only).

INTERCHANGEABILITY .. NAS1067, MS21086, MS21087.

NOTES .....
(1) Threads per MIL-S-8879 prior to the addition of dry film lubricant.
(2) Add suffix "CPC" to part number for cad plate per QQ-P-416, Type II, Class 2 without dry film lubricant (carbon steel only)
(3) Minimum "H" not specified, limited only by strength requirement of specification.
(4) For countersunk rivet holes, add suffix "BC" to part number. Example: MT13S1032BC. For projection welding nibs add suffix "PWB" to part number. Example: MT13C1032PWB.
(5) Center of tapped hole shall not deviate in any direction from the center of the plate nut, as determined by the rivet holes, by more than .005.

Figure 7-14. MT13S, MT13CM, MT13C anchor nut, reduced rivet spacing, limited access, 125,000 pounds per square inch

Downloaded from http://www.everyspec.com

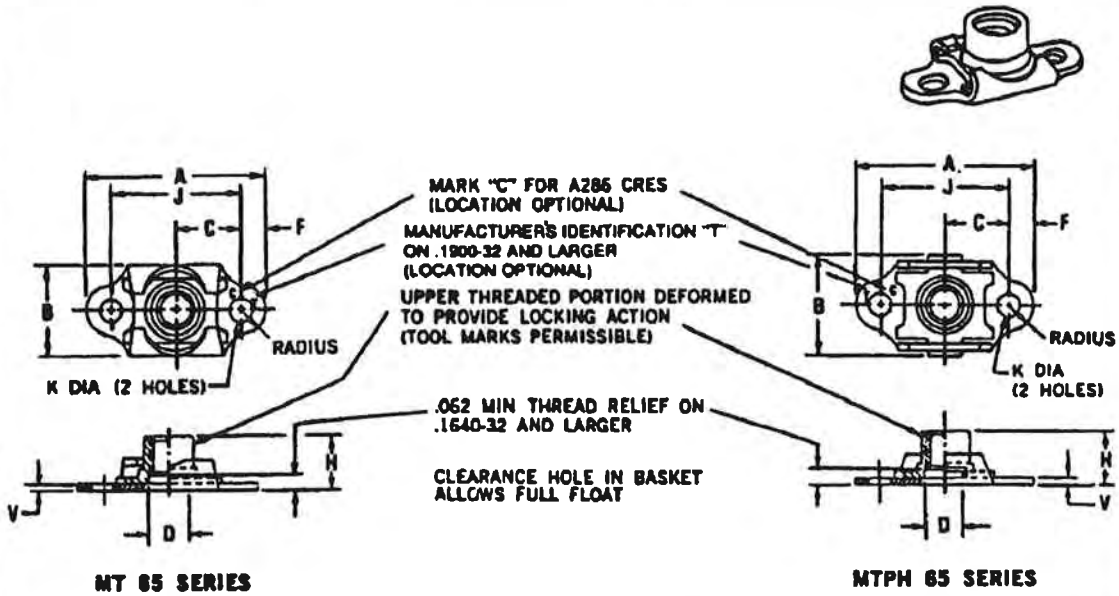

MT 65 SERIES

MTPH 65 SERIES

CHERRY PART NUMBER			THREAD SIZE (1)	A	B	C	D	F	H (3)	J	K +.005 −.000	V	APPROX WT PER 100 PCS
STEEL 450°F	CRES 450°F	CRES 800°F		MAX		±.005	MIN	MIN	MAX	±.002		MAX	
MTPH65S440S	MTPH65C440CM	MTPH65C440C	.1120 - 40 UNJC - 3B	.498	.315 .275	.148	–	.075	.153	.296	.066	.032	.08
MTPHL65S440S	MTPHL65C440CM	MTPHL65C440C	.1120 - 40 UNJC - 3B	.651	.315 .275	.203	–	.070	.153	.406	.098	.032	.09
MTPH65S632S	MTPH65C632CM	MTPH65C632C	.1380 - 32 UNJC - 3B	.545	.357 .290	.172	–	.075	.171	.343	.066	.032	.14
MTPHL65S632S	MTPHL65C632CM	MTPHL65C632C	.1380 - 32 UNJC - 3B	.682	.357 .290	.218	–	.070	.171	.437	.098	.032	.16
MT65S832S	MT65C832CM	MT65C832C	.1640 - 32 UNJC - 3B	.707	.367 .290	.234	.168	.100	.250	.468	.098	.032	.21
MT65S1032S	MT65C1032CM	MT65C1032C	.1900 - 32 UNJF - 3B	.739	.416 .290	.250	.194	.100	.250	.500	.098	.032	.27
MT65S428S	MT65C428CM	MT65C428C	.2500 - 28 UNJF - 3B	.801	.500 .350	.281	.254	.100	.281	.562	.098	.032	.65

MATERIAL ..... MT65S — Carbon steel, heat treated Rc40 max
MT65CM & MT65C — Corrosion-resistant steel (A286), AMS5525, AMS5732, AMS5737.

FINISH ..... MT65S — Cadmium plated per QQ-P-416 plus dry film lubricant (The type & class of cad is optional if nuts meet the salt spray requirements of QQ-P-416, Type II.) Dry film lubricant on basket is manufacturer's option.
MT65CM — Nut — Dry film lubricant
Basket — Passivated or dry film lubricant, manufacturer's option. No finish on weld nibs.
MT65C — Nut — Silver plated per AMS2410 measured on external surface of nut shall not be less than .0002 inch. Threads shall show complete coverage but thickness is waived.
Basket — Passivated or silver plated, manufacturer's option. No silver plate on weld nibs

PROCUREMENT SPEC .. MIL-N-25027, NAS3350 (carbon steel only).

INTERCHANGEABILITY .. NAS1068, MS21075, MS21076.

NOTES .....
(1) Threads per MIL-S-8879 prior to the addition of dry film lubricant.
(2) Add suffix "CPC" to part number for cad plate per QQ-P-416, Type II, Class 2 without dry film lubricant (carbon steel only).
(3) Minimum "H" not specified, limited only by strength requirement of specification.
(4) Capped versions of these anchor nuts may be obtained.
(5) Nut portion shall float not less than .020 radially from centered position and be capable of engaging bolt in maximum misaligned position

Figure 7-15. MT65S, MT65CM, MT65C, MTPH65S, MTPH65CM, MTPH65C anchor nut, reduced rivet spacing, two lug, floating, 125,000 pounds per square inch

Downloaded from http://www.everyspec.com

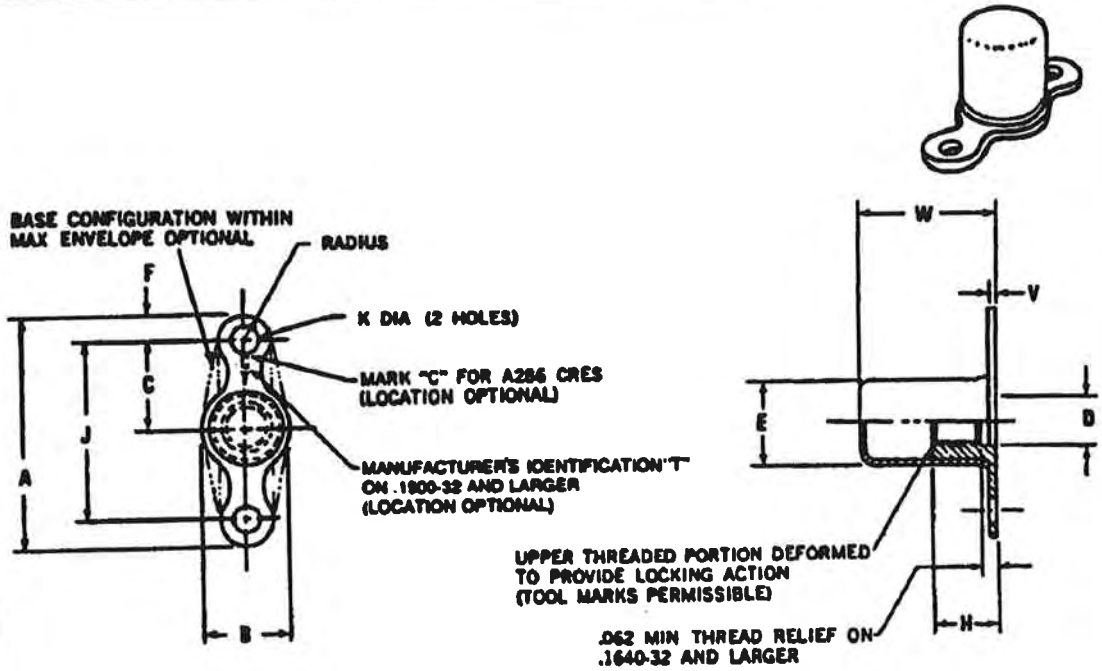

CHERRY PART NUMBER STEEL 450°F	CHERRY PART NUMBER CRES 800°F	THREAD SIZE (1)	A MAX	B	C ±.005	D MIN	E REF	F MIN	H REF	J ±.002	K -.005 -.000	V MAX	W ±.010	APPROX WT PER 100 PCS
T2S832K	T2C832K	.1380-32 UNJC-3B	.948	.265 .230	.344	-	.228	.100	.171	.688	.098	.047	.516 .375	.28 .24
T2S632K1	T2C632K1													
T2S832K	T2C832K	.1640-32 UNJC-3B	.948	.297 .277	.344	.188	.252	.100	.250	.688	.098	.047	.516 .375	.35 .31
T2S832K1	T2C832K1													
T2S1032K	T2C1032K	.1900-32 UNJF-3B	.948	.328 .308	.344	.184	.280	.100	.250	.688	.098	.047	.516 .375	.36 .32
T2S1032K1	T2C1032K1													
T2S428K	T2C428K	.2500-28 UNJF-3B	1.280	.414 .375	.500	.254	.347	.100	.281	1.000	.098	.055	.547 .438	.78 .73
T2S428K1	T2C428K1													
T2S524K	T2C524K	.3125-24 UNJF-3B	1.292	.505 .485	.500	.317	.416	.125	.328	1.000	.130	.065	.609 .500	.99 .89
T2S524K1	T2C524K1													
T2S624K	T2C624K	.3750-24 UNJF-3B	1.292	.614 .594	.500	.379	.505	.125	.344	1.000	.130	.075	.719 .500	1.70 1.58
T2S624K1	T2C624K1													

MATERIAL ..... T2S Nut — Carbon steel Rc 40 MAX.
Cap — Mild steel.

T2C Nut — A-286 per AMS5525.
Cap — A-286 or 321 stainless.

FINISH ..... T2S Cadmium plate per QQ-P-416 Type II Class 2

T2C Silver plate per AMS2410 measured on external surface of nut shall not be less than .0002 inches. Threads shall show complete coverage but thickness is waived.

PROCUREMENT SPEC .... MIL-N-25027.

NOTES ..... (1) Thread per MIL-S-8879.
(2) Threads lubed with Ferrocote #348 or equivalent.
(3) Add "BC" suffix to basic part number for countersunk rivet holes.
(4) Add "PWB" suffix to basic part number for projection welding nibs.
(5) Cap shall be sufficiently square to permit full bolt entry.

Figure 7-16. T2SK, T2SK1, T2CK, T2CK1 anchor nut, capped, two lug, 450°-800°F

Downloaded from http://www.everyspec.com

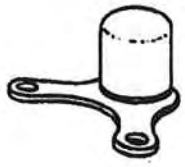

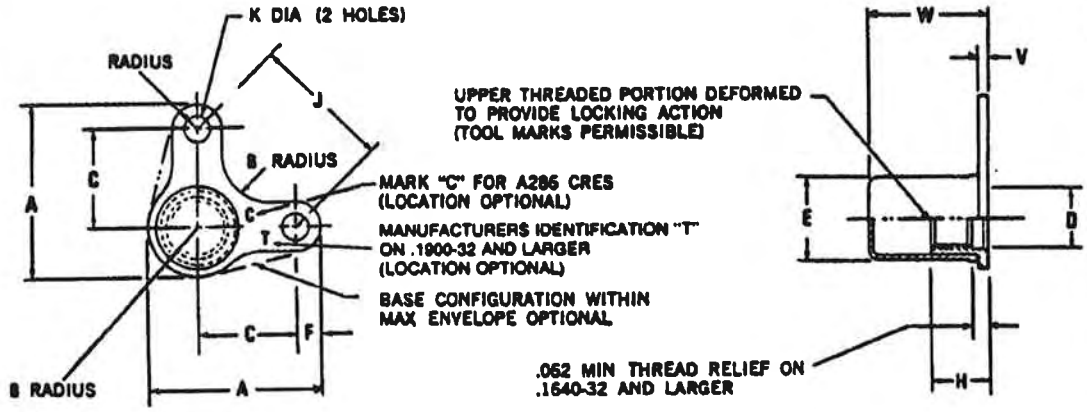

CHERRY PART NUMBER		THREAD SIZE	A	B	C	D	E	F	H	J	K	V	W	APPROX WT PER 100 PCS
STEEL 450°F	CRES 800°F	(1)	MAX		±.005	REF	REF	MIN	REF	±.002	+.005 ±.000	REF	±.010	
T7S632K	T7C632K	.1380-32 UNJC-3B	.584	.133 .108	.344	.288	—	.100	.156	.486	.098	.031	.516 .375	.38 .26
T7S632K1	T7C632K1													
T7S832K	T7C832K	.1640-32 UNJC-3B	.607	.149 .125	.344	.252	.188	.100	.220	.486	.098	.031	.516 .375	.37 .32
T7S832K1	T7C832K1													
T7S1032K	T7C1032K	.1900-32 UNJF-3B	.623	.164 .145	.344	.280	194	.100	.220	.486	.098	.031	.516 .375	.38 .34
T7S1032K1	T7C1032K1													
T7S428K	T7C428K	.2500-28 UNJF-3B	.822	.207 .185	.500	.347	.254	.100	.250	.707	.098	.040	.547 .438	.78 .73
T7S428K1	T7C428K1													
T7S524K	T7C524K	.3125-24 UNJF-3B	.892	.248 .216	.500	.416	.317	.125	.280	.707	.130	.045	.609 .500	1.01 .89
T7S524K1	T7C524K1													
T7S624K	T7C624K	.3750-24 UNJF-3B	.968	.307 .290	.500	.505	.379	.125	.280	.707	.130	.062	.719 .500	1.70 1.58
T7S624K1	T7C624K1													

MATERIAL ..... T7S Nut — Carbon steel Rc 49 MAX.
Cap — Mild steel.

T7C Nut — A-286 per AMS5525.
Cap — A-286 or 321 stainless.

FINISH ..... T7S Cadmium plate per QQ-P-416 Type II Class 2.

T7C Silver plate per AMS2410 measured on external surface of nut shall not be less than .0002 inches. Threads shall show complete coverage but thickness is waived.

PROCUREMENT SPEC ... MIL-N-25027.

NOTES ..... (1) Threads per MIL-S-8879.
(2) Add "BC" suffix to part numbers for countersunk rivet holes.
(3) Add "PWB" suffix to part number for projection welding nibs.
(4) Cap shall be sufficiently square to permit full bolt entry.
(5) Threads lubed with Ferrocote #348 or equivalent.

Figure 7-17. T7SK, T7SK1, T7CD, T7CK1 anchor nut, capped, corner, 450°-800°F

Downloaded from http://www.everyspec.com

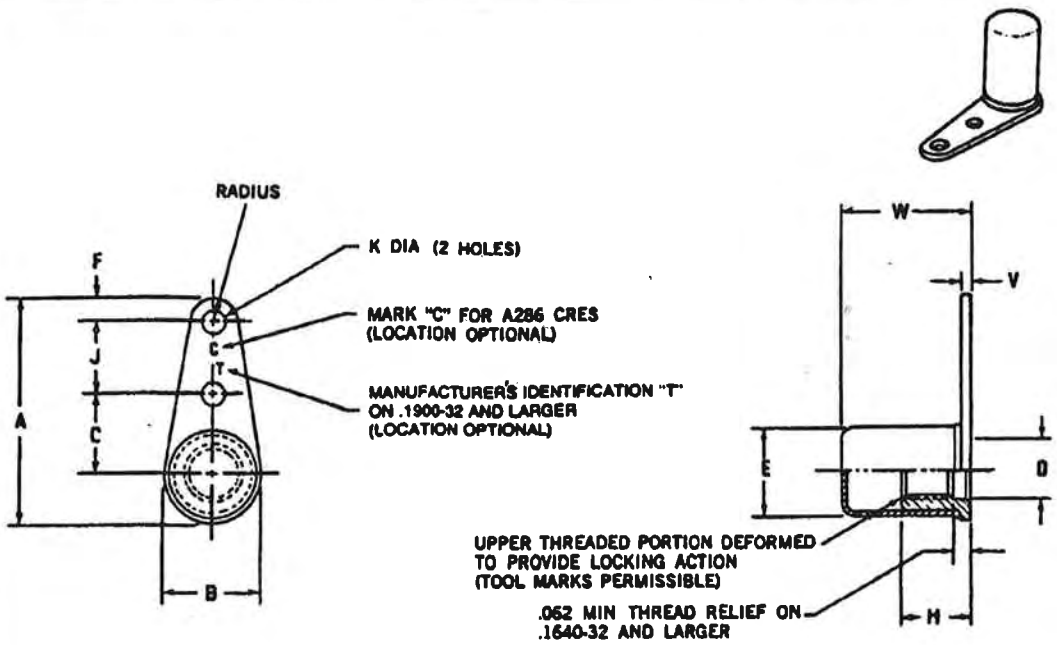

CHERRY PART NUMBER STEEL 450°F	CHERRY PART NUMBER CRES 800°F	THREAD SIZE (1)	A MAX	B	C ±.005	D MIN	E REF	F MIN	H REF	J ±.002	K +.005 -.000	V REF	W ±.010	APPROX WT PER 100 PCS
T12S632K	T12C632K	.1380-32 UNJC-3B	.935	.297	.344	—	.228	.100	.156	.312	.098	.031	.516	.38
T12S632K1	T12C632K1			.239									.375	.33
T12S832K	T12C832K	.1640-32 UNJC-3B	.935	.277	.344	.168	.252	.100	.220	.312	.098	.031	.516	.38
T12S832K1	T12C832K1												.375	.33
T12S1032K	T12C1032K	.1900-32 UNJF-3B	.950	.328	.344	.194	.280	.100	.220	.312	.098	.031	.516	.40
T12S1032K1	T12C1032K1			.308									.375	.36
T12S428K	T12C428K	.2500-28 UNJF-3B	.993	.414	.344	.254	.347	.100	.250	.312	.098	.040	.438	.64
T12S428K1	T12C428K1			.375									.547	.54
T12S524K	T12C524K	.3125-24 UNJF-3B	1.207	.505	.500	.317	.411	.125	.280	.312	.130	.045	.500	1.01
T12S524K1	T12C524K1			.485									.609	.89
T12S624K	T12C624K	.3750-24 UNJF-3B	1.261	.614	.500	.379	.472	.125	.280	.312	.130	.062	.500	1.70
T12S624K1	T12C624K1			.594									.719	1.59

MATERIAL ..... T12S Nut — Carbon Steel Rc 49 MAX.
Cap — Mild Steel.
T12C Nut — A-286 per AMS5525.
Cap — A-286 or 321 stainless.

FINISH ..... T12S Cadmium plate per QQ-P-416 Type II Class 2.
T12C Silver plate per AMS2410 measured on external surface of nut shall not be less than .0002 inches. Threads shall show, complete coverage but thickness is waived.

PROCUREMENT SPEC ... MIL-N-25027.

NOTES ..... (1) Threads per MIL-S-8879.
(2) Threads lubed with Ferrocote #348 or equivalent.
(3) Add "8C" suffix to part number for countersunk rivet holes.
(4) Add "PWB" suffix to part number for projection welding nibs.
(5) Cap shall be sufficiently square to permit full bolt entry.
(6) Shape within max envelope dimensions are manufacturer's option.

Figure 7-18. T12SK, T12SK1, T12CK, T12CK1 anchor nut, capped, one lug, 450°-800°F

Downloaded from http://www.everyspec.com

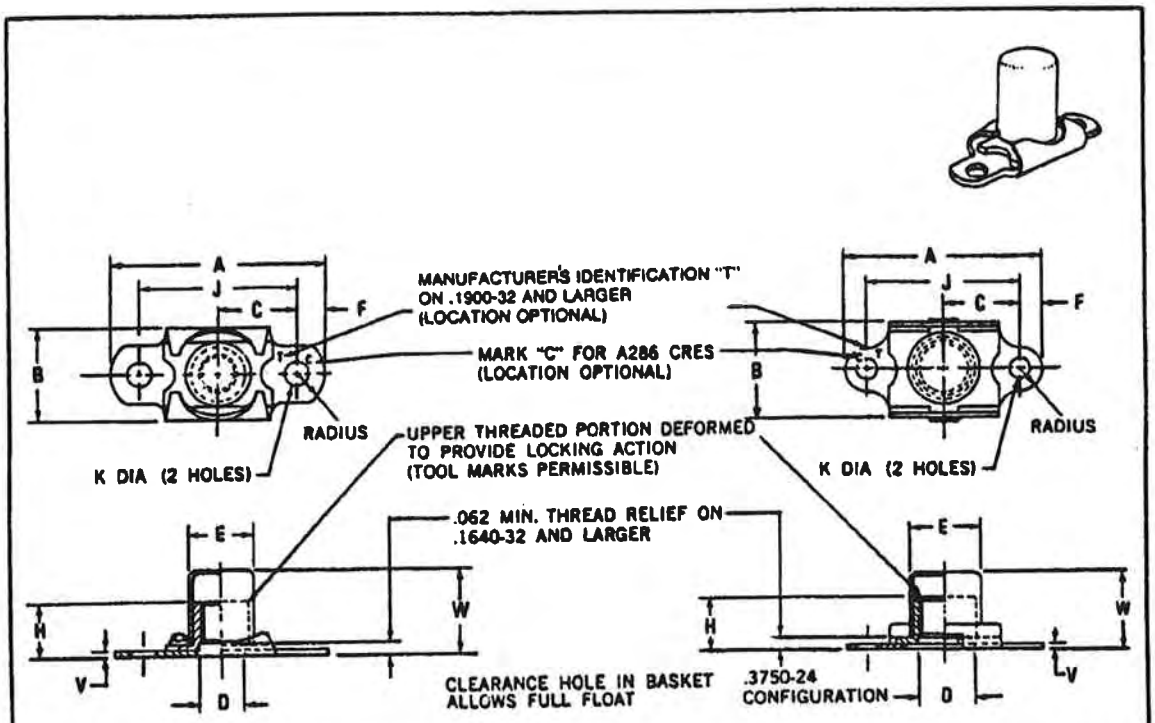

CHERRY PART NUMBER STEEL 450°F	CHERRY PART NUMBER CRES 800°F	THREAD SIZE (1)	A MAX	B	C ±.005	D MIN	E REF	F MIN	H REF	J ±.002	K +.005 -.000	V MAX	W ±.010	APPROX WT PER 100 PCS
T65S632SK	T65C632SK	.1380-32 UNJC-3B	.948	.416 .290	.344	—	.228	.100	.190	.688	.098	.032	.518 .377	.48 .45
T65S632SK1	T65C632SK1													
T65S832SK	T65C832SK	.1640-32 UNJC-3B	.948	.416 .290	.344	.168	.252	.100	.220	.688	.098	.032	.518 .377	.55 .50
T65S832SK1	T65C832SK1													
T65S1032SK	T65C1032SK	.1900-32 UNJF-3B	.948	.416 .290	.344	.194	.280	.100	.220	.688	.098	.032	.518 .377	.55 .51
T65S1032SK1	T65C1032SK1													
T65S428SK	T65C428SK	.2500-28 UNJF-3B	1.292	.516 .350	.500	.254	.347	.100	.281	1.000	.098	.032	.549 .440	1.16 1.10
T65S428SK1	T65C428SK1													
T65S524SK	T65C524SK	.3125-24 UNJF-3B	1.292	.609 .412	.500	.317	.411	.125	.328	1.000	.130	.045	.611 .502	1.47 1.37
T65S524SK1	T65C524SK1													
T65S624SK	T65C624SK	.3750-24 UNJF-3B	1.290	.680 .475	.500	.379	.472	.125	.344	1.000	.130	.055	.721 .502	2.00 1.88
T65S624SK1	T65C624SK1													

MATERIAL ..... T65S Nut & Basket — Carbon steel Rc 49 MAX.
Cap — Mild steel.

T65C Nut & Basket — A-286 per AMS5525.
Cap — A-286 or 321 stainless.

FINISH ..... T65S Cadmium Plate per QQ-P-416 Type II Class 2.

T65C Nut — Silver plate per AMS2410 measured on external surface of nut shall not be less than .0002 inches. Threads shall show complete coverage but thickness is waived.
Basket — Passive.

PROCUREMENT SPEC .. MIL-N-25027.

NOTES ..... (1) Threads per MIL-S-8879.
(2) Add "BC" suffix to part number for countersunk rivet holes.
(3) Add "PWB" suffix to part number for projection welding nibs.
(4) Cap shall be sufficiently square to permit full bolt entry.
(5) Threads lubed with Ferrocote #348 or equivalent.

Figure 7-19. T65SK, T65SK1, T65CK, T65CK1 anchor nut, capped, two lug, floating, 450°-800°F

Downloaded from http://www.everyspec.com

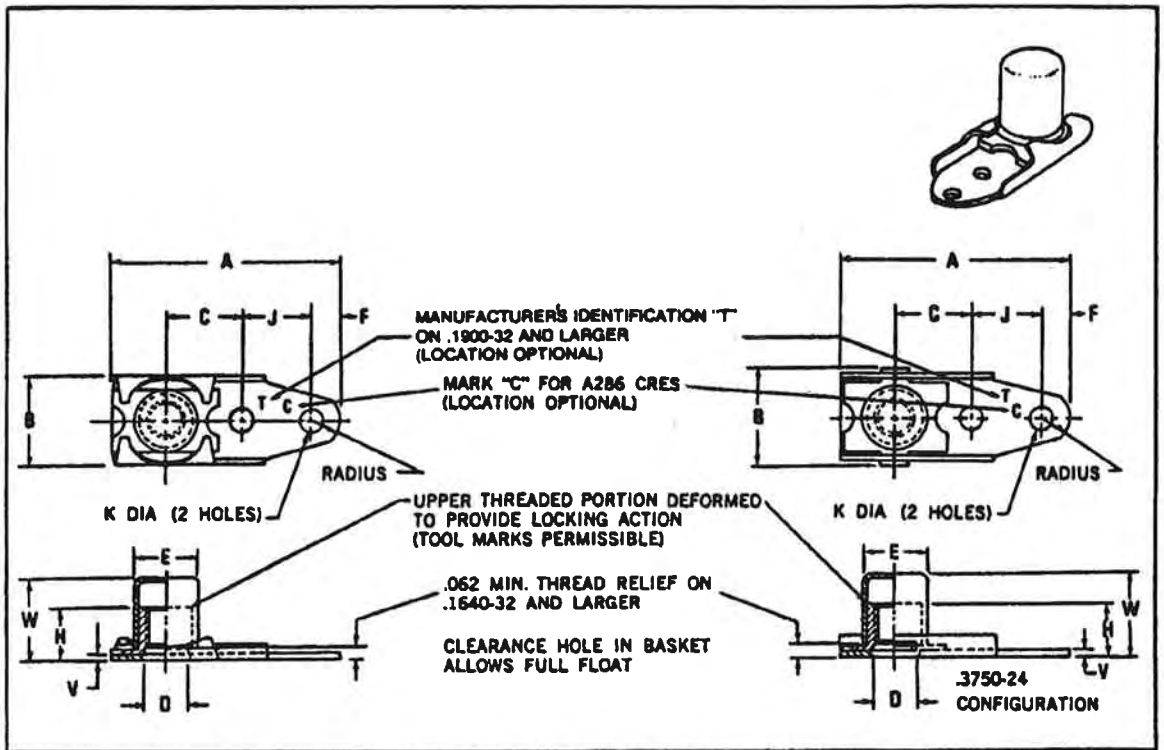

CHERRY PART NUMBER STEEL 450°F	CHERRY PART NUMBER CRES 800°F	THREAD SIZE (1)	A MAX	B	C ±.005	D MIN	F MIN	H REF	J ±.002	K .005 ±.000	V REF	W ±.010	APPROX WT PER 100 PCS
T66S632SK	T66C632SK	.1380-32 UNJC-3B	1.051	.422 .290	.344	—	.100	.203	.312	.098	.032	.518 .377	.57 .54
T66S632SK1	T66C632SK1												
T66S832SK	T66C832SK	.1640-32 UNJC-3B	1.051	.422 .290	.344	.168	.100	.250	.312	.098	.032	.518 .377	.60 .55
T66S832SK1	T66C832SK1												
T66S1032SK	T66C1032SK	.1900-32 UNJF-3B	1.051	.422 .290	.344	.194	.100	.250	.312	.098	.032	.518 .377	.61 .56
T66S1032SK1	T66C1032SK1												
T66S428SK	T66C428SK	.2500-28 UNJF-3B	1.306	.531 .350	.500	.254	.100	.281	.312	.098	.032	.549 .400	1.22 1.16
T66S428SK1	T66C428SK1												
T66S524SK	T66C524SK	.3125-24 UNJF-3B	1.396	.641 .412	.500	.317	.125	.328	.312	.130	.045	.611 .502	1.57 1.46
T66S524SK1	T66C524SK1												
T66S624SK	T66C624SK	.3750-24 UNJF-3B	1.396	.680 .451	.500	.379	.125	.344	.312	.130	.045	.721 .502	7.25 2.13
T66S624SK1	T66C624SK1												

MATERIAL ..... T66S Nut & Basket—Carbon Steel Rc 49 MAX
Cap—Mild Steel.
T66C Nut & Basket—A-286 per AMS5525.
Cap—A-286 or 321 stainless.

FINISH ..... T66S Cadmium plate per QQ-P-416 Type II Class 2.
T66C Nut & Cap—Silver plate per AMS2410 measured on external surface of nut shall not be less than .0002 inches. Threads shall show complete coverage but thickness is waived.
Basket—Passivate.

PROCUREMENT SPEC ... MIL-N-25027.

NOTES ..... (1) Threads per MIL-S-8879.
(2) Threads lubed with Ferrocote #348 or equivalent.
(3) Add "BC" suffix to basic part number for countersunk rivet holes.
(4) Add "PWB" suffix to part number for projection welding nibs.
(5) Cap shall be sufficiently square to permit full bolt entry.

Figure 7-20. T66SK, T66SK1, T66CK, T66CK1 anchor nut, capped, one lug, floating, 450°-800°F

Downloaded from http://www.everyspec.com

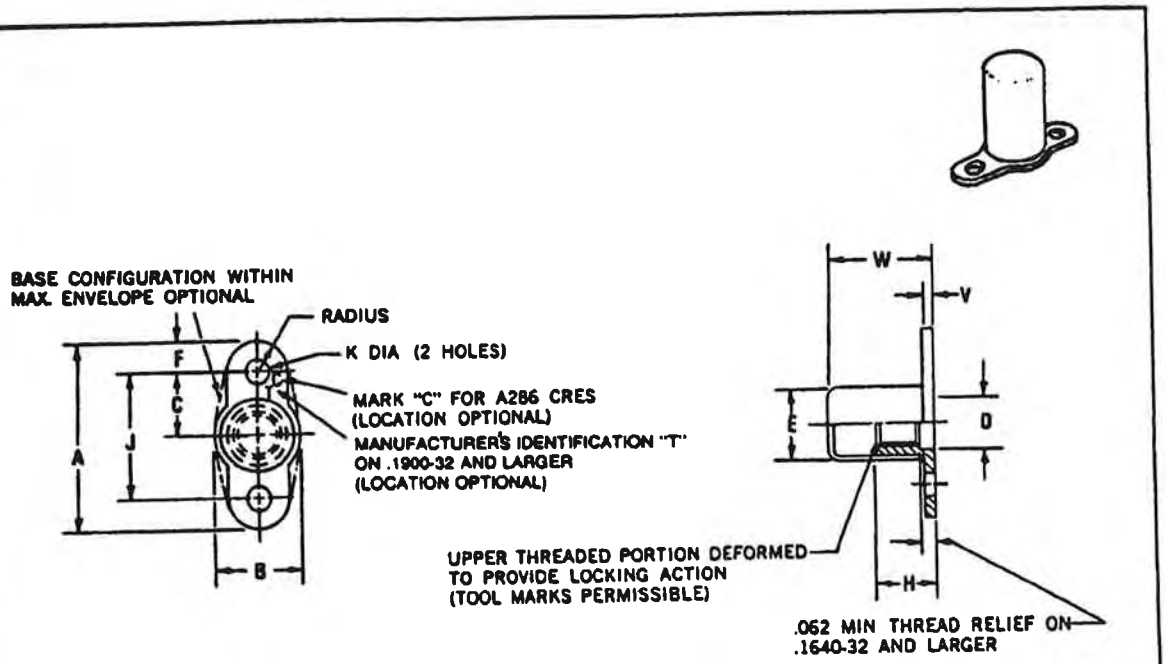

CHERRY PART NUMBER		THREAD SIZE (1)	A	B	C	D	E	F	H (2)	J	K (3)	V	W	APPROX. WT PER 100 PCS
STEEL 450°F	CRES 800°F		MAX		±.005	MIN	REF	MIN	MAX	±.002	+.005 −.000	MAX	+.020 −.010	
MT2S440K	MT2C440K	.1120 - 40	.456	.194	.148	—	.198	.071	.143	.296	.066	.040	.293	.12
MT2S440K1	MT2C440K1	UNJC - 38		.140									.179	.09
MT2S632K	MT2C632K	.1380 - 32	.503	.242	.172	—	.228	.071	.171	.343	.066	.047	.516	.22
MT2S632K1	MT2C632K1	UNJC - 38		.195									.375	.18
MT2S832K	MT2C832K	.1640 - 32	.692	.297	.234	.168	.252	.100	.250	.468	.098	.047	.516	.32
MT2S832K1	MT2C832K1	UNJC - 38		.230									.375	.27
MT2S1032K	MT2C1032K	.1900 - 32	.724	.328	.250	.194	.280	.100	.250	.500	.098	.047	.516	.36
MT2S1032K1	MT2C1032K1	UNJF - 38		.298									.375	.31
MT2S428K	MT2C428K	.2500 - 28	.786	.414	.281	.254	.347	.100	.281	.562	.098	.055	.547	.55
MT2S428K1	MT2C428K1	UNJF - 38		.380									.438	.50
MT2S524K	MT2C524K	.3125 - 24	1.006	.505	.359	.317	.411	.125	.328	.718	.130	.065	.609	.91
MT2S524K1	MT2C524K1	UNJF - 38		.475									.500	.80
MT2S624K	MT2C624K	.3750 - 24	1.116	.614	.414	.379	.472	.125	.344	.828	.130	.075	.719	1.32
MT2S624K1	MT2C624K1	UNJF - 38		.580									.500	1.20

MATERIAL ..... MT2SK & MT2SK1 — Nut — Carbon steel, heat treated Rc49 max.
Cap — Mild steel.
MT2CK & MT2CK1 — Nut — Corrosion-resistant steel (A286), AMS5525, AMS5732, AMS5737.
Cap — Corrosion-resistant steel (A286), AMS5525, AMS5732, AMS5737 or (321), AMS5510.

FINISH ..... MT2SK & MT2SK1 — Cadmium plated per QQ-P-416, Type II, Class 2 plus Ferrocote 348 or equal lubricant.
MT2CK & MT2CK1 — Silver plated per AMS2410 measured on external surface of nut shall not be less than .0002 inch. Threads shall show complete coverage but thickness is waived. No silver plate on weld nibs.

PROCUREMENT SPEC .. MIL-N-25027, NAS3350 (carbon steel only).

INTERCHANGEABILITY .. Within envelope dimensions of NAS697, MS21069, MS21070.

NOTES .....
(1) Threads per MIL-S-8879.
(2) Minimum "H" not specified, limited only by strength requirement of specification.
(3) For countersunk rivet holes, add suffix "BC" to part number. Example: MT2S1032KBC. For projection welding nibs, add suffix "PWB" to part number. Example: MT2C1032KPWB.
(4) Cap squareness limits: Not to restrict full bolt entry.

Figure 7-21. MT2SK, MT2SK1, MT2CK, MT2CK1 anchor nut, reduced rivet spacing, two lug, capped, 125,000 pounds per square inch

Downloaded from http://www.everyspec.com

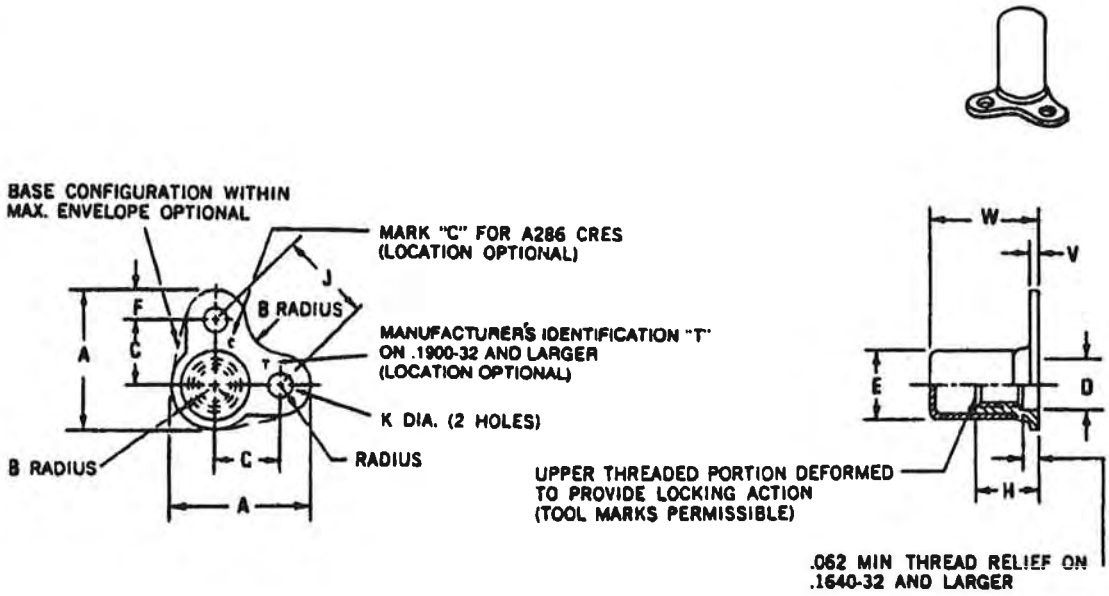

CHERRY PART NUMBER		THREAD SIZE (1)	A	B	C	D	E	F	H (2)	J	K (3)	V	W	APPROX WT PER 100 PCS
STEEL 450°F	CRES 800°F		MAX		±.005	MIN	REF	MIN	MAX	±.002	+.005 −.000	MAX	+.020 −.010	
MT7S440K	MT7C440K	.1120 - 40 UNJC - 3B	.331	.097 .094	.148	—	.198	.071	.143	.210	.066	.040	.293 .179	.12 .09
MT7S440K1	MT7C440K1													
MT7S632K	MT7C632K	.1380 - 32 UNJC - 3B	.379	.121 .118	.172	—	.228	.071	.171	.243	.066	.047	.516 .375	.23 .19
MT7S632K1	MT7C632K1													
MT7S832K	MT7C832K	.1640 - 32 UNJC - 3B	.497	.148 .125	.234	.168	.252	.100	.250	.331	.098	.047	.516 .375	.34 .28
MT7S832K1	MT7C832K1													
MT7S1032K	MT7C1032K	.1900 - 32 UNJF - 3B	.526	.164 .156	.250	.194	.280	.100	.250	.354	.098	.047	.516 .375	.36 .32
MT7S1032K1	MT7C1032K1													
MT7S428K	MT7C428K	.2500 - 28 UNJF - 3B	.603	.207 .200	.281	.254	.347	.100	.281	.398	.098	.055	.547 .438	.55 .49
MT7S428K1	MT7C428K1													
MT7S524K	MT7C524K	.3125 - 24 UNJF - 3B	.757	.252 .250	.359	.317	.411	.125	.328	.508	.130	.065	.609 .500	.91 .80
MT7S524K1	MT7C524K1													
MT7S624K	MT7C624K	.3750 - 24 UNJF - 3B	.870	.307 .305	.414	.379	.472	.125	.344	.585	.130	.075	.719 .500	1.32 1.20
MT7S624K1	MT7C624K1													

MATERIAL ..... MT7SK & MT7SK1 — Nut — Carbon steel, heat treated Rc49 max.
Cap — Mild steel.
MT7CK & MT7CK1 — Nut — Corrosion-resistant steel (A286), AMS5525, AMS5732, AMS5737.
Cap — Corrosion-resistant steel (A286), AMS5525, AMS5732, AMS5737 or (321), AMS5510.

FINISH ..... MT7SK & MT7SK1 — Cadmium plated per QQ-P-416, Type II, Class 2 plus Ferrocote 348 or equal lubricant. No finish on weld nibs.
MT7CK & MT7CK1 — Silver plated per AMS2410 measured on external surface of nut shall not be less than .0002 inch. Threads shall show complete coverage but thickness is waived. No silver plate on weld nibs.

PROCUREMENT SPEC .. MIL-N-25027, NAS3350 (carbon steel only).

INTERCHANGEABILITY .. Within envelope dimensions of NAS898, MS21073, MS21074.

NOTES ..... (1) Threads per MIL-S-8879.
(2) Minimum "H" not specified, limited only by strength requirements of specification.
(3) For countersunk rivet holes, add suffix "BC" to part number. Example: MT7S1032KBC. For projection welding nibs, add suffix "PWB" to part number. Example: MT7C1032KPWB.
(4) Cap squareness limits: Not to restrict full bolt entry.

Figure 7-22. MT7SK, MT7SK1, MT7CK, MT7CK1 anchor nut, reduced rivet spacing, corner, capped, 125,000 pounds per square inch

Downloaded from http://www.everyspec.com

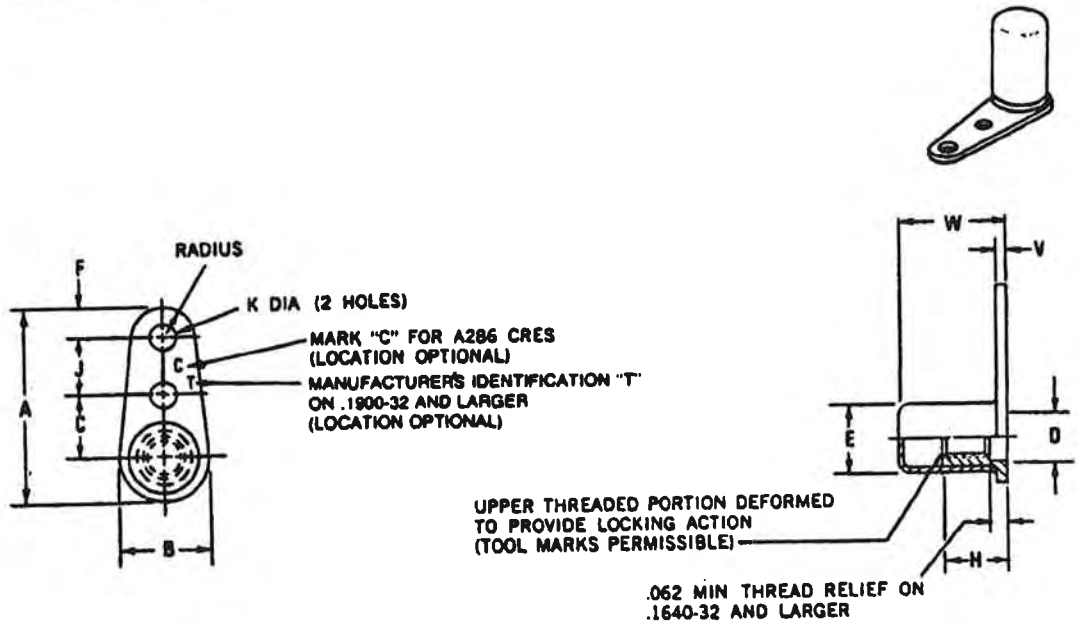

CHERRY PART NUMBER		THREAD SIZE (1)	A MAX	B	C ±.005	D MIN	E REF	F MIN	H (2) MAX	J ±.002	K (3) +.005 −.000	V MAX	W +.020 −.010	APPROX WT PER 100 PCS
STEEL 450°F	CRES 800°F													
MT12S440K	MT12C440K	.1120 - 40 UNJC - 3B	.550	.194 .140	.148	—	.198	.071	.143	.219	.066	.040	.293 .179	.13 .10
MT12S440K1	MT12C440K1													
MT12S632K	MT12C632K	.1380 - 32 UNJC - 3B	.598	.242 .195	.171	—	.228	.071	.171	.219	.066	.047	.516 .375	.23 .20
MT12S632K1	MT12C632K1													
MT12S832K	MT12C832K	.1640 - 32 UNJC - 3B	.716	.297 .235	.234	.168	.252	.100	.250	.219	.098	.047	.516 .375	.30 .25
MT12S832K1	MT12C832K1													
MT12S1032K	MT12C1032K	.1900 - 32 UNJF - 3B	.745	.328 .298	.250	.194	.280	.100	.250	.219	.098	.047	.516 .375	.36 .32
MT12S1032K1	MT12C1032K1													
MT12S428K	MT12C428K	.2500 - 28 UNJF - 3B	.822	.414 .380	.281	.254	.347	.100	.281	.219	.098	.055	.547 .438	.58 .52
MT12S428K1	MT12C428K1													
MT12S524K	MT12C524K	.3125 - 24 UNJF - 3B	1.026	.505 .475	.359	.317	.411	.125	.328	.269	.130	.065	.609 .500	.95 .84
MT12S524K1	MT12C524K1													
MT12S624K	MT12C624K	.3750 - 24 UNJF - 3B	1.139	.614 .580	.414	.379	.472	.125	.344	.269	.130	.075	.719 .500	1.32 1.20
MT12S624K1	MT12C624K1													

MATERIAL ..... MT12SK & MT12SK1 } Nut — Carbon steel, heat treated Rc49 max. Cap — Mild steel.
MT12CK & MT12CK1 } Nut — Corrosion-resistant steel (A286), AMS5525, AMS5732, AMS5737. Cap — Corrosion-resistant steel (A286), AMS5525, AMS5732, AMS5737 or (321), AMS5510.

FINISH ..... MT12SK & MT12SK1 — Cadmium plated per QQ-P-416, Type II, Class 2 plus Ferrocote 348 or equal lubricant. No finish on weld nibs.
MT12CK & MT12CK1 — Silver plated per AMS2410 measured on external surface of nut shall not be less than .0002 inch. Threads shall show complete coverage but thickness is waived. No silver plate on weld nibs.

PROCUREMENT SPEC .. MIL-N-25027, NAS3350 (carbon steel only).

INTERCHANGEABILITY .. Within envelope dimensions of NAS696, MS21071, MS21072.

NOTES ..... (1) Threads per MIL-S-8879.
(2) Minimum "H" not specified, limited only by strength requirement of specification.
(3) For countersunk rivet holes, add suffix "BC" to part number. Example: MT12S1032KBC. For projection welding nibs, add suffix "PWB" to part number. Example: MT12C1032KPWB. dimensions.)
(4) Cap squareness limits: Not to restrict full bolt entry.

Figure 7-23. MT12SK, MT12SK1, MT12CK, MT12CK1 anchor nut, reduced rivet spacing, one lug, capped, 125,000 pounds per square inch

Downloaded from http://www.everyspec.com

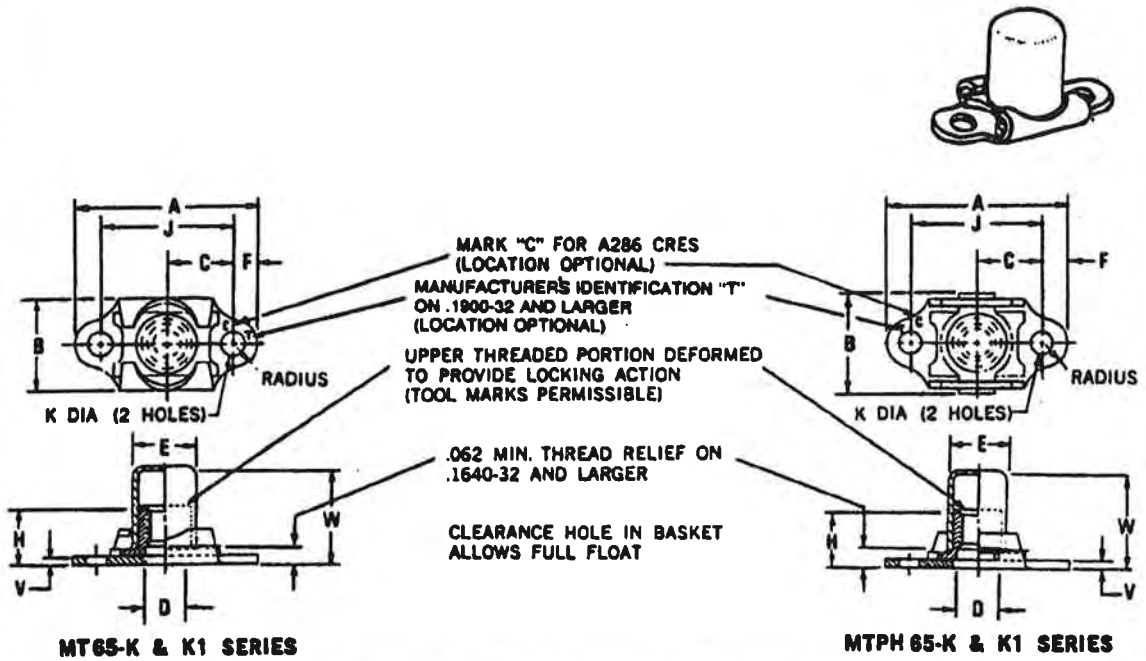

MT65-K & K1 SERIES

MTPH 65-K & K1 SERIES

CHERRY PART NUMBER STEEL 450°F	CHERRY PART NUMBER CRES 800°F	THREAD SIZE (1)	A MAX	B	C ±.005	D MIN	E REF	F MIN	H (2) MAX	J ±.002	K +.005 −.000	V MAX	W +.020 −.010	APPROX WT PER 100 PCS
MTPH65S440SK	MTPH65C440CK	.1120 - 40 UNJC - 3B	.545	.357 .290	.172	–	.198	.075	.153	.343	.066	.032	.325	.15
MTPH65S440SK1	MTPH65C440CK1												.211	.12
MTPH65S632SK	MTPH65C632CK	.1380 - 32 UNJC - 3B	.707	.367 .290	.234	–	.228	.100	.171	.468	.098	.032	.518	.26
MTPH65S632SK1	MTPH65C632CK1												.377	.22
MT65S632SK	MT65C632CK												.518	.26
MT65S632SK1	MT65C632CK1												.377	.22
MT65S832SK	MT65C832CK	.1640 - 32 UNJC - 3B	.707	.367 .290	.234	.168	.252	.100	.250	.468	.098	.032	.518	.32
MT65S832SK1	MT65C832CK1												.377	.26
MT65S1032SK	MT65C1032CK	.1900 - 32 UNJF - 3B	.739	.416 .290	.250	.194	.280	.100	.250	.500	.098	.032	.518	.29
MT65S1032SK1	MT65C1032CK1												.377	.35
MT65S428SK	MT65C428CK	.2500 - 28 UNJF - 3B	.801	.500 .350	.281	.254	.347	.100	.281	.562	.098	.032	.549	.87
MT65S428SK1	MT65C428CK1												.440	.81

MATERIAL ..... MT65SK & MT65SK1 — Nut & Basket — Carbon steel, heat treated Rc49 max. Cap — Mild steel.
MT65CK & MT65CK1 — Nut & Basket — Corrosion-resistant steel (A286), AMS5525, AMS5732, AMS5737. Cap — Corrosion-resistant steel (A286), AMS5525, AMS5732, AMS5737 or (321), AMS5510.

FINISH ..... MT65SK & MT65SK1 — Cadmium plated per QQ-P-416, Type II, Class 2 plus Ferrocote 348 or equal lubricant. No finish on weld nibs.
MT65CK & MT65CK1 — Nut & Cap — Silver plated per AMS2410 measured on exernal surface of nut shall not be less than .0002 inch. Threads shall show complete coverage but thickness is waived. Basket — Passivated or silver plated, mfr's option.

PROCUREMENT SPEC .. MIL-N-25027, NAS3350 (carbon steel only).

INTERCHANGEABILITY .. Within envelope dimensions of NAS1068, MS21075, MS21076 (.1640-32 and larger).

NOTES ..... (1) Threads per MIL-S-8879.
(2) Minimum "H" not specified, limited only by strength requirement of specification.
(3) Cap squareness limits: Not to restrict full bolt entry.
(4) Nut portion shall float not less than .020 radially from centered position and be capable of engaging bolt in maximum misaligned position.

Figure 7-24. MTPH65SK, MTPH65SK1, MTPH65CK, MTPH65CK1, MT65SK, MT65SIK1, MT65CK, MT65CK1 anchor nut, reduced rivet spacing, two lug, floating, capped, 125,000 pounds per square inch

Downloaded from http://www.everyspec.com

Self-Locking

Self-locking nut plates are made in two materials: all-steel and aluminum alloy. All-steel plates are used in structural areas where stress is a factor and also in and around engine compartment areas where high temperatures are present. They have crimped locking threads or a fiber locking collar at the end of the nut plate. These locking devices prevent the installed bolts or screws from backing out of the nut plate threads under stress or vibrations. Aluminum alloy, self-locking nut plates are used in areas where stress and high temperatures are not present. They usually have a fiber locking collar.

NOTE: Replace a self-locking nut that becomes stripped from cross-threading or overtorquing.

CAUTION

Never try to run a tap through a self-locking nut plate. It will destroy the plate's locking capability.

Non-Self-Locking

Occasionally, non-self-locking nut plates are made of steel or aluminum alloy. They are most often used on noncritical areas, such as instrument access panels, and do not have locking devices.

NOTE: When preparing to install nut plates on an aircraft, refer to the applicable technical manual to ensure use of the correct nut plate.

Section III. Washers

PLAIN

AN960 plain washers (Table 7-7) are used under AN hexagon nuts to provide a smooth bearing surface. They also act as a shim to obtain the correct relationship between threads of the bolt and nut, and they adjust the position of castellated nuts in relation to drilled cotter pin holes in bolts. Unless otherwise specified, a cadmium-plated steel washer is used under the nut, with the washer bearing directly against the structure. Aluminum alloy plain washers

Table 7-7. AN960 plain washers

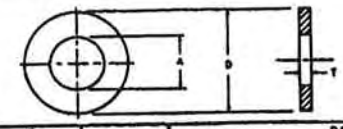

BOLT SIZE	A DIA	D +0.030 −0.005 DIA	T	DASH NUMBERS				
				CARBON STEEL	CORROSION-RESISTANT STEEL	ALUMINUM ALLOY TREATED SURFACES	ALUMINUM ALLOY UNTREATED SURFACES	BRASS
NO. 3	0.105	0.250	0.016 0.032	3L 3	C3L C3	PD3L PD3	D3L D3	B3
NO. 4	0.138	0.312	0.016 0.032 0.036	4L 4	C4L C4	PD4L PD4	D4L D4	B4
NO. 5	0.140	0.438	0.062					
NO. 6	0.169	0.375	0.016 0.032	6L 6	C6L C6	PD6L PD6	D6L D6	B6
NO. 8	0.174	0.375	0.016 0.032	8L 8	C8L C8	PD8L PD8	D8L D8	B8
NO. 10	0.203	0.438	0.016 0.032 0.049 0.063	10L 10	C10L C10	PD10L PD10	D10L D10	B10
1/4	0.266	0.500	0.016 0.032 0.063	416L 416	C416L C416	PD416L PD416	D416L D416	B416
5/16	0.328	0.562	0.016 0.032 0.063	516L 516	C516L C516	PD516L PD516	D516L D516	B516
3/8	0.390	0.438	0.016 0.032 0.063	616L 616	C616L C616	PD616L PD616	D616L D616	B616
7/16	0.453	0.750	0.016 0.032 0.063	716L 716	C716L C716	PD716L PD716	D716L D716	B716
1/2	0.515	0.875	0.016 0.032 0.063	816L 816	C816L C816	PD816L PD816	D816L D816	B816
9/16	0.578	1.062	0.016 0.032 0.063	916L 916	C916L C916	PD916L PD916	D916L D916	B916
5/8	0.640	1.188	0.016 0.032 0.063	1016L 1016	C1016L C1016	PD1016L PD1016	D1016L D1016	B1016
3/4	0.765	1.312	0.016 0.032 0.090	1216L 1216	C1216L C1216	PD1216L PD1216	D1216L D1216	B1216

Downloaded from http://www.everyspec.com

Table 7-7. AN960 plain washer (cont)

BOLT SIZE	A DIA	D +0.020 -0.005 DIA	T	DASH NUMBERS				
				CARBON STEEL	CORROSION-RESISTANT STEEL	ALUMINUM ALLOY		BRASS
						TREATED SURFACES	UNTREATED SURFACES	
7/8	0.890	1.500	0.016 0.032 0.090	1416L 1416	C1416L C1416	PD1416L PD1416	D1416L D1416	B1416
1	1.015	1.750	0.016 0.032 0.090	1616L 1616	C1616L C1616	PD1616L PD1616	D1616L D1616	B1616
1-1/16	1.078	1.812	0.016 0.032 0.090	1716L 1716	C1716	PD1716L PD1716	D1716L D1716	B1716
1-1/8	1.140	1.875	0.016 0.032 0.090	1816L 1816	C1816	PD1816L PD1816	D1816L D1816	B1816
1-5/16	1.328	2.062	0.016 0.032 0.090	2116L 2116	C2116	PD2116L PD2116	D2116L D2116	B2116
1-5/8	1.640	2.375	0.016 0.032 0.090	2616L 2616	C2616	PD2616L PD2616	D2616L D2616	B2616
1-7/8	1.890	2.625	0.016 0.032 0.090	3016L 3016	C3016	PD3016L PD3016L	D3016L D3016	B3016
2-1/4	2.265	3.000	0.016 0.032 0.090	3616L 3616	C3616	PD3616L PD3616	D3616L D3616	B3616
2-1/2	2.515	3.250	0.016 0.032 0.090	4016L 4016	C4016	PD4016L PD4016	D4016L D4016	B4016

NOTES:
1. P CODING IN TABLE IDENTIFIES ALUMINUM ALLOY WASHERS WITH TREATED SURFACES.
2. L CODING IN TABLE IDENTIFIES THE LIGHT SERIES OF WASHERS.
3. EXAMPLES OF PART NUMBERS:
   AN960-716 = CARBON STEEL WASHER FOR 7/16-INCH BOLT SIZE, 0.064 INCH THICK.
   AN960PD10L = ALUMINUM ALLOY WASHER FOR NO. 10 BOLT SIZE, 0.016 INCH THICK, WITH TREATED SURFACES.
4. MATERIALS: CARBON STEEL, CORROSION-RESISTANT STEEL, ALUMINUM ALLOY, AND BRASS.
5. DIMENSIONS SHOWN ARE IN INCHES.

are used under bolt heads or nuts on aluminum alloy or magnesium structures where corrosion is a factor.

OTHER

Many other types of washers are available for use. Refer to TM 55-1500-204-25/1 and TO 1-1A-8 for additional information.

Section IV. Bolt and Nut Installation

BOLT HOLE SIZE TOLERANCES

Bolt Hole Clearances

Slight clearances in bolt holes are permitted when bolts are used in tension applications and are not subject to load reversal. A few applications in which clearance of holes may be permitted are in pulley brackets, conduit boxes, lining trim, and miscellaneous supports and brackets. Light-drive fits for bolts (specified on repair drawings as 0.0015 inch maximum clearance between bolt and hole) are required in areas where they are installed in the original structure.

Hole and Bolt Fit

The fit of holes and bolts cannot be defined in terms of shaft and hole diameter. Instead, it is defined in terms of friction between bolt and hole when the sliding bolt is in place. For example, a tight-drive fit is one where a sharp blow from a 12- or 14-ounce hammer is needed to move the bolt. A bolt that requires a hard blow and sounds tight fits too tightly, while a bolt that moves when pushed with the thumbs is too loose. A light-drive fit is one where a bolt moves when the handle of a hammer is held against the bolt head and pressed by body weight. To get a light-drive fit, follow these steps:

Downloaded from http://www.everyspec.com

- Measure several bolts of the correct nominal size with a micrometer. (Nominal size is quoted size, not actual size.)
- Divide the bolts into three groups by size—large, medium, and small.
- Drill an initial hole about 1/32 inch undersize (1/8 inch undersize may be used for larger bolts). Then drill to 1/64 inch undersize.
- Select a reamer capable of cutting a hole that will give proper drag even when using the smallest bolts.
- Ream two or three holes and fit the small bolts in the reamed holes.
- If the hole reamed is too small, measure the reamer to ensure that it is not worn. If it is worn or undersized, select another reamer of the same nominal size that can cut a slightly larger hole.
- Refer to Table 7-8 for the proper drill sizes when drilling AN bolts.

Bolt Holes

Do not drill oversized or elongated bolt holes. A bolt in such a hole will not carry its proper shear load. Remember that bolts, unlike rivets, do not become swaged to fill the hole. Therefore, an oversized or elongated hole may be drilled to accommodate the next larger bolt, if the applicable maintenance manual allows it and the larger hole size does not weaken the part.

TORQUE APPLICATION

To avoid stripping threads, cracking nuts, or snapping bolts, and to ensure that all bolts carry their share of the load, all nuts should be torqued. To avoid overtightening, the tightening force of every nut installed should be measured.

Torque is the product of applied force and the distance that it is applied from the center of the nut. This value may be expressed in inch-pounds or foot-pounds; the force is measured in pounds, and the distance from the center of the nut is measured in inches or feet. For example, a force of 40 pounds applied at the end of a wrench 12 inches long develops a twisting force of 480 inch-pounds. If 40 pounds of force were applied at the end of a 3-foot bar and wrench, a twisting force of 120 foot-pounds develops. This value could also be expressed as 1440 inch-pounds.

Nuts tightened without a torque wrench are seldom installed correctly. They are either overtightened because of the variable involved or undertightened because of undetected friction. Such guesswork can result in aircraft failure. Tables showing torque values have not been established for aircraft use, but torque tables for tightening or installing nuts have been established. Follow instructions in the manual for the specific aircraft. Table 7-9 lists the recommended torque values for some of the nuts used in aircraft repairs.

Table 7-8. AN bolt drill sizes

BOLT DIAMETER	PILOT HOLE DRILL SIZE	FINAL DRILL OR REAM SIZE
3/16 (10-32)	NO 21 (0.159)	NO 11 (0.191)
1/4	7/32 (0.2187)	1/4 (0.250)
5/16	9/32 (0.2812)	5/16 (0.3125)
3/8	11/32 (0.3437)	3/8 (0.375)
7/16	13/32 (0.4062)	7/16 (0.4375)
1/2	15/32 (0.4687)	1/2 (0.500)
9/16	17/32 (0.531)	9/16 (0.5625)
5/8	19/32 (0.594)	5/8 (0.625)
3/4	23/32 (0.713)	3/4 (0.750)
7/8	27/32 (0.844)	7/8 (0.875)
1	31/32 (0.969)	1 (1.000)

Downloaded from http://www.everyspec.com

CAUTION

These torque values are derived from oil-free, cadmium-plated threads.

When applying torque to a nut, always use proper tools to prevent damage. Because they will not damage the corners of the nut, socket and box-end wrenches are preferred to open-end wrenches.

Section V. Turn-Lock Fasteners

TYPES AND DESCRIPTION

Turn-lock fasteners are widely used in aircraft construction. Many aircraft areas must be accessible for required inspections and maintenance. Turn-lock fasteners allow quick and easy removal or installation of the cowling, fairings, inspection plates, and access doors, but they are not designed to carry primary structural stresses. Two basic types of turn-lock fasteners are the Dzus and the Camloc.

Dzus Fasteners (Grommet, Spring, and Stud)

This Dzus fastener is shown in Figure 7-25 (top). Its key parts are as follows.

Grommet

The grommet acts as a holding device for the stud. It is made of aluminum and can be fabricated from 1100 aluminum tubing if available.

Retention Spring

The retention spring supplies the force that locks or secures the stud in place when two assemblies are joined. It is made of cadmium-plated steel to prevent corrosion.

Stud

Studs provide positive attachment of the components to other surfaces. They are made of cadmium-plated steel in three different head styles–lush, oval, and wing (Figure 7-26)–and in different lengths and diameters. Stud length is measured in hundredths of an inch. For the flush and wing styles, stud length equals the distance

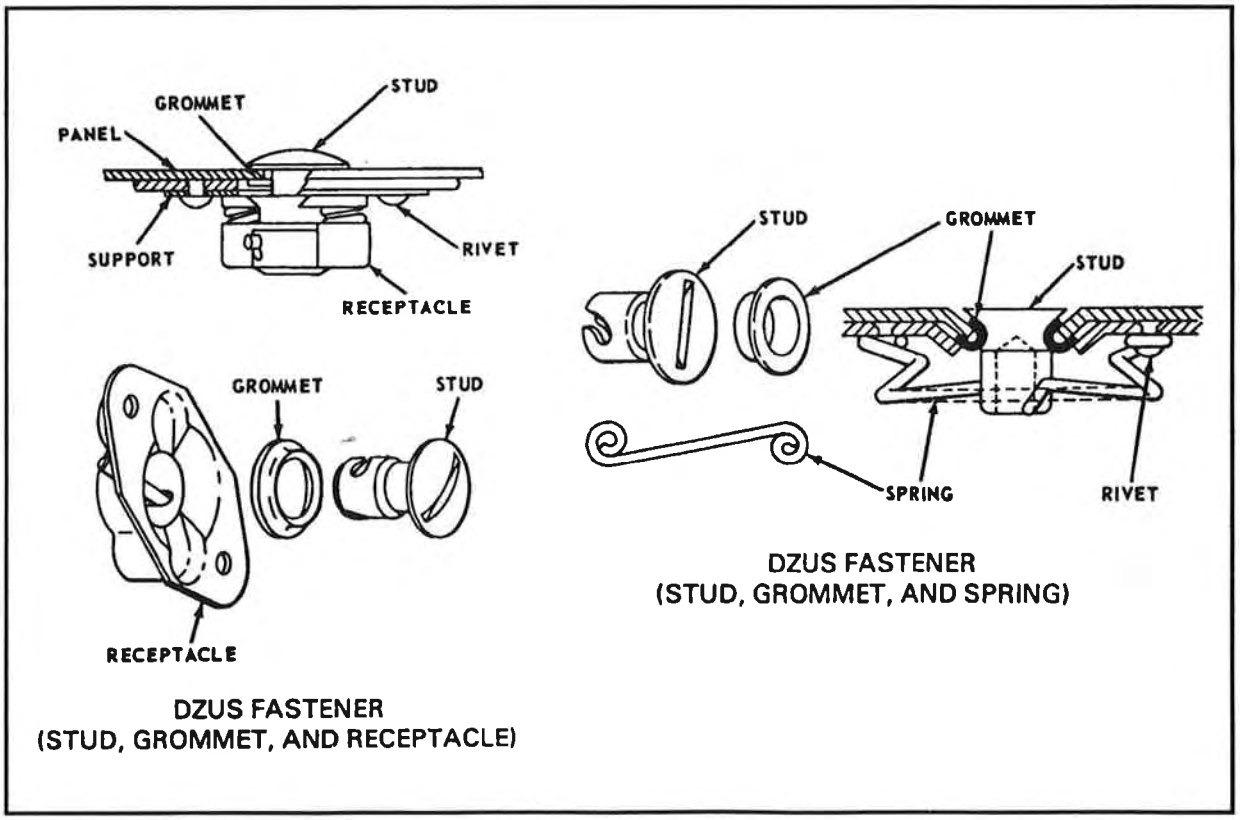

Figure 7-25. Dzus fasteners

Downloaded from http://www.everyspec.com

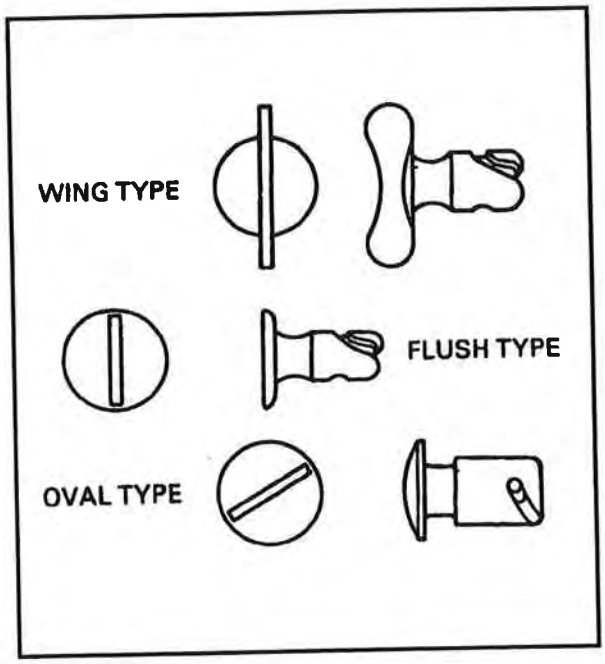

Figure 7-26. Dzus fastener studs

from the top surface of the stud head to the bottom of the hole spring. In the oval style, stud length is measured from the underside of the stud head to the bottom of the spring hole.

Dzus Fasteners (Grommet, Receptacle, and Stud)

This Dzus fastener is shown in Figure 7-25 (bottom). Its key parts are as follows.

Grommet

The grommet holds the stud in the panel. It is made of 1100-H14 nonanodized aluminum.

Receptacle

The receptacle has a heat-treated steel base and cadmium-plated, music-wire springs. Receptacles are either rigid or floating. The receptacle is fully enclosed to protect fastener parts and has a smooth, beveled entrance to guide the stud into the locking position. The two coil springs provide locking tension and can sustain unlimited fatigue.

Stud

The stud is made of SAE 2317 nickel steel, heat-treated and cadmium-plated. It is available in oval, oval-wing, or flush-head styles and in different lengths for different thicknesses of material. A counterclockwise quarter-turn of the stud opens the fastener; a clockwise quarter-turn closes it. The stud is held in the various aircraft parts by a grommet, spring, or ring.

Camloc Fasteners

These fasteners are used to secure aircraft cowlings and fairings. They are made in various styles and designs. Among the most common are the 2600-, 2700-, 40S51-, and 4002-series for normal usage and the stressed-panel fastener (SPF) for heavy-duty use. The SPF is used in stressed panels, that is, panels that carry structural loads. The Camloc fastener consists of three parts–a stud assembly, grommet with a lock ring, and receptacle–or a stud and receptacle only. It is often referred to as the Camloc cowling fastener. Figure 7-27 shows the 4002-series fastener consisting of a stud, grommet, and receptacle.

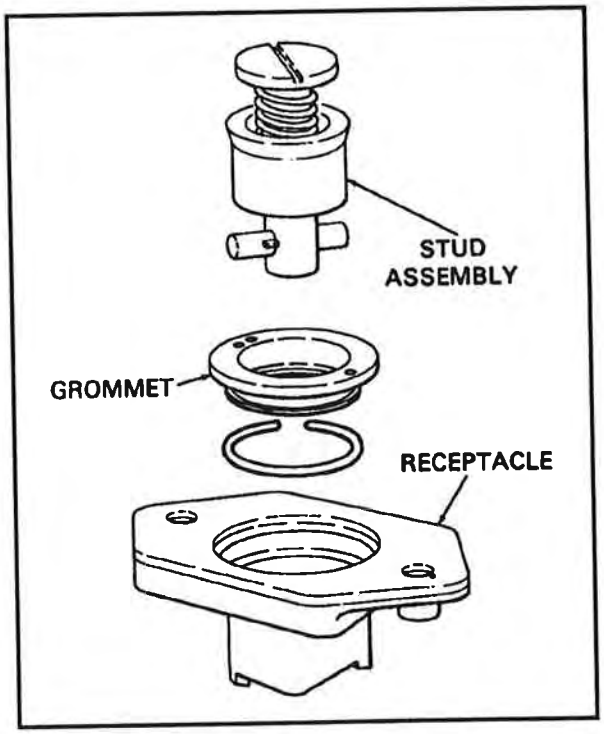

Figure 7-27. Camloc 4001-series fastener

Stud

The stud assembly in any Camloc fastener consists of a stud, cross pin, spring, and spring cup. It is preassembled at the factory and should never be disassembled. The stud assembly is manufactured in different lengths to accommodate various panel thicknesses. Flush or non-flush studs are available.

Downloaded from http://www.everyspec.com

Grommet

The grommet is a flanged sheet metal ring made to fit into a plain, dimpled, countersunk, or counterbored hole in the external cowling. The type of hole used depends on the location and thickness of the material involved. The grommet is held in the material by a snap ring or lock ring in the 4002-series fastener only. In addition to protecting the hole in the cowling, the grommet holds the stud assembly. The grommet is manufactured in different lengths for various cowling thicknesses.

Receptacle

The receptacle is riveted to the access opening frame, which is attached to the structure of the aircraft.

IDENTIFICATION

The Dzus fastener comes in two varieties. The following information will help to identify them.

Dzus Fastener (Stud, Grommet, and Retention Spring)

This fastener is available in different sizes and head designs.

Studs

Studs are designated by the letters A, F, FA, and HF, which indicate the shape of the stud head. The letter A indicates that the head is oval; the letters F and FA that it is flush; and the letters HF that it is hexagon. The letter J added after these symbols indicates that the stud has a longer undercut below the head. This allows the stud to eject or recede from the panel when being attached or removed. The letter W added after these symbols indicates that a wing is attached to the head. The letter O indicates that the stud is not undercut, permitting it to be removed when unlocked. The first figure after the letters indicates body diameter in sixteenths of an inch, and the number following the dash indicates length in hundredths of an inch. Some examples are—

- A3-20—oval-head stud, 3/16-inch body diameter, 0.20 inch long.
- FJ4-35—flush-head stud, long undercut, 1/4-inch body diameter, 0.35 inch long.
- FAW5-35—flush-head stud, wing attached to head, 5/16-inch body diameter, 0.35 inch long.
- A06 1/2-50—oval-head stud without undercut, 13/32-inch body diameter, 0.50 inch long.

NOTE: Body diameter, length, and head type are marked on the stud heads.

Standard Grommets

All standard grommets carry designations similar to springs except that they are prefixed by the letters GA and GF.

Standard Springs

All standard springs are designated by the letter S. The number following this letter indicates the size of the stud used with the spring. The number following the dash indicates the height of the spring. For example, a type S3-200 spring is the standard spring used with a number 3 stud and is 0.200 inch high.

Dzus Fastener (Stud, Grommet, and Receptacle)

This fastener is available in different sizes and head designs.

Studs

Studs are designated by the letters A, AW, and F, which indicate the shape of the stud head. The letter A indicates that the head is oval; the letters AW that it is oval with a wing; and the letter F that it is flush. Three sizes of body diameters are available: 7/32 inch (size 3 1/2), 5/16 inch (size 5), and 3/8 inch (size 6). The first figure following the letter indicates the body diameter of the stud in sixteenths of an inch. The letter T and the suffix number following it indicate total thickness of the panel in hundredths of an inch and the required fastener thickness. Some examples are—

- A3 1/2T12—oval-head stud, 7/32-inch body diameter, suitable for a total material thickness of 0.12 inch.
- F5T16—flush-head stud, 5/16-inch body diameter, suitable for a total material thickness of 0.16 inch.
- AW6T18—oval-wing-head stud, 3/8-inch body diameter, suitable for a total material thickness of 0.18 inch.

Grommets

The stud-retaining grommets are designated as type GH. The next number indicates the body diameter of the stud it is compatible with. Some examples are—

- GH3 1/2—grommet used with A3 1/2, AW3 1/2, or F3 1/2 stud.

Downloaded from http://www.everyspec.com

- GH5—grommet used with A5, AW5, or F5 stud.
- GH6—grommet used with A6, AW6, or F6 stud.

Receptacles

Receptacles are available in type R, rigid, and type RF, floating. The number following the letter R or RF indicates the body diameter of the stud the receptacle is compatible with. Some examples are—

- R3 1/2—rigid receptacle for use with A3 1/2, AW3 1/2, or F3 1/2 stud.
- RF5—floating receptacle for use with A5, AW5, or F5 stud.

NOTE: Two spacers are provided with each RF receptacle.

Camloc Fasteners

These fasteners are available in different numerical series. Each of the following series used in aircraft structural applications is designed for a specific purpose:

- The 2600 series is used where a flush fit is not required. The stud will withstand tension and shear loads up to 300 pounds.
- The 2700 series is used where a flush fit is required. The stud will withstand tension and shear loads up to 300 pounds.
- The 28F series is intended for use where internal clearance conditions are very close. The stud will withstand tension and shear loads up to 300 pounds.
- The 4002 series is used where a flush fit is not required and where the potential misalignment between panels may be up to 1/16 inch. The stud can withstand tension and shear loads up to 1050 pounds.

INSTALLATION

The following special tools and procedures are used for installing the different types of turn-lock fasteners.

Dzus Fastener (Stud, Grommet, and Retention Spring)

Figure 7-28 shows the special tools used to install types A-AJ and F-FA-FJ Dzus fasteners. Figure 7-29 shows the installation sequence for the same type of Dzus fasteners, using the tools pictured.

Dzus Fastener (Stud, Grommet, and Receptacle)

Figure 7-30 shows the special tools used to install the stud, grommet, and receptacle, and Figure 7-31 shows installation of the receptacle. Figure 7-32 shows installation of the stud and grommet (lock ring).

Camloc Fastener

The following steps should be used to install Camloc fasteners:

- Prepare a hole for the grommet in the panel or piece of material. Punch the hole about 1/32 inch smaller than the outside diameter of the grommet. Deburr the edges and sand them smooth to avoid cracking during dimpling operations.
- Select male and female dimpling dies of corresponding size to dimple the hole.
- Insert the grommet into the dimpled hole from the top and expand the snap ring over the shoulder of the grommet.
- Using a pair of Camloc pliers, depress the spring of the stud assembly. Then insert the stud into the grommet with twisting motion and release the spring. The stud cannot be removed unless the spring is again depressed.
- Prepare a hole for the receptacle in the piece of material. The hole should be about the same diameter as that of the receptacle.
- Center the receptacle on the prepared hole and mark rivet locations. Remove the receptacle from the hole. Center-punch, drill, and countersink rivet holes on mating surfaces.
- Install the receptacle over the hole and secure it with flush-head rivets.

The tools shown in Figure 7-33 simplify the installation of Camloc fasteners. Camloc pliers, a punch and die set, and the snap ring mandrel and handles are used to install Camlocs. These tools are part of the sheet metal shop set and are relatively easy to reproduce locally if broken or lost.

REMOVAL

The following procedures are used for removing the Dzus and Camloc fasteners described above.

Downloaded from http://www.everyspec.com

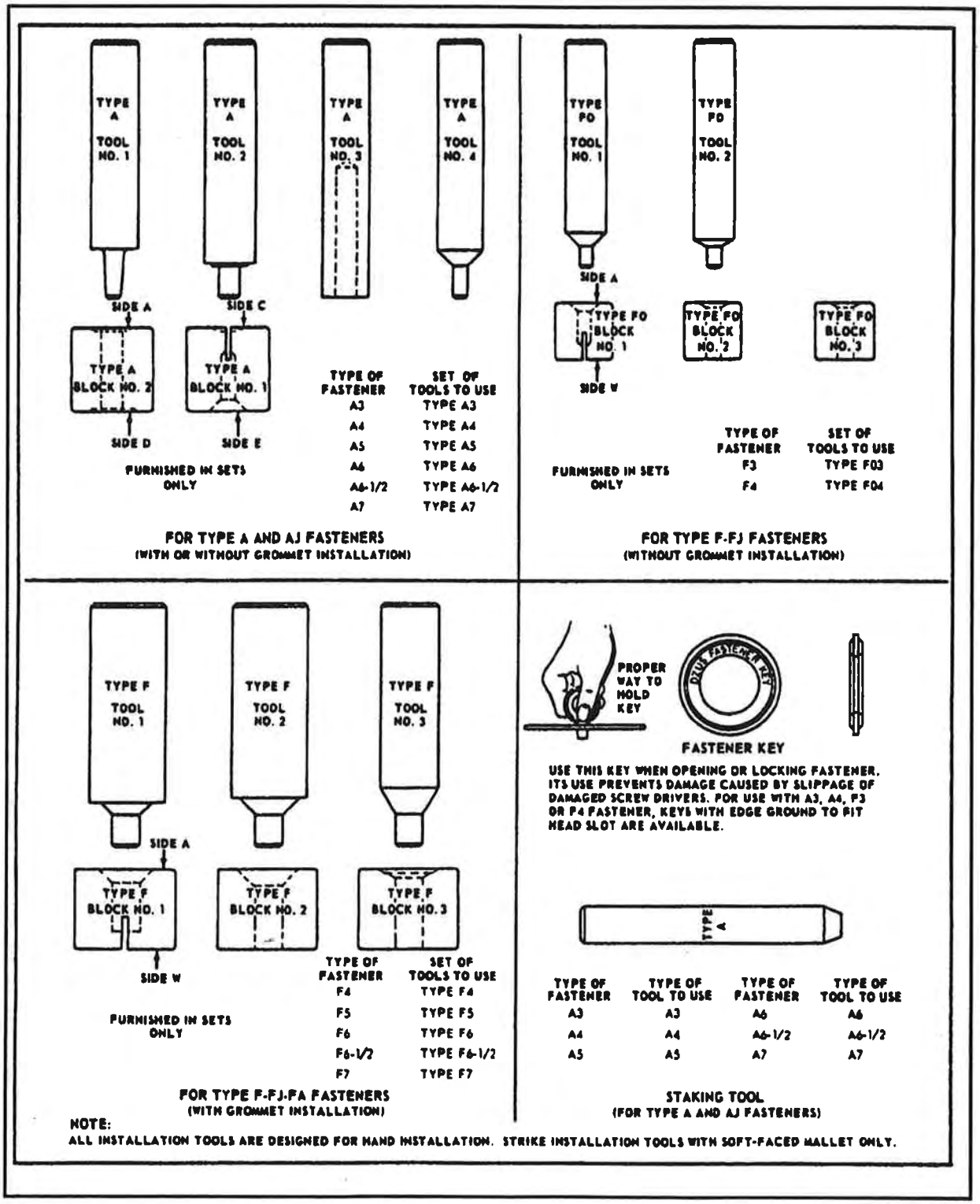

Figure 7-28. Installation tools for type A-AJ and F-FA-FJ Dzus fasteners

Downloaded from http://www.everyspec.com

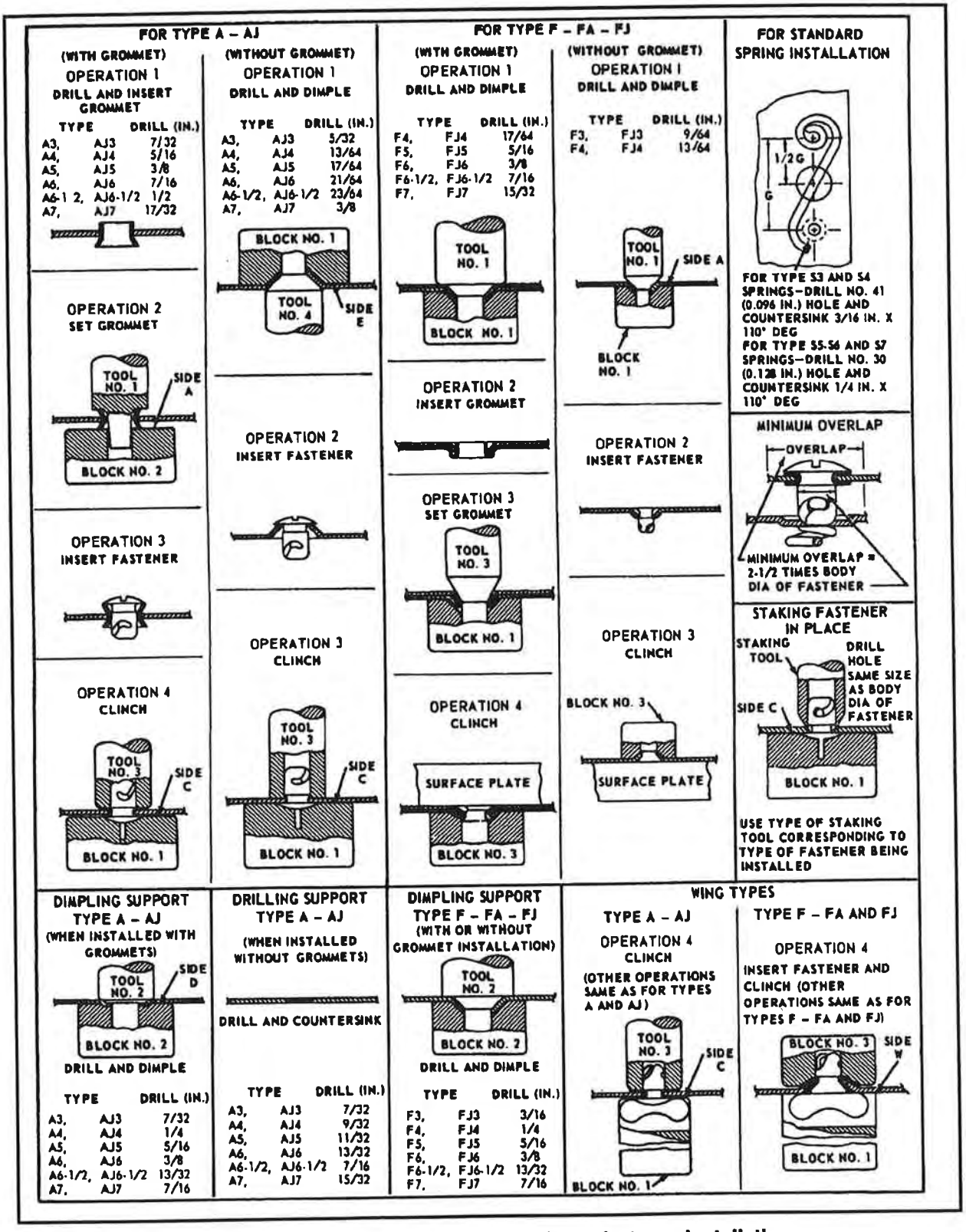

Figure 7-29. Type A-AJ and F-FA-FJ Dzus fastener installation

Downloaded from http://www.everyspec.com

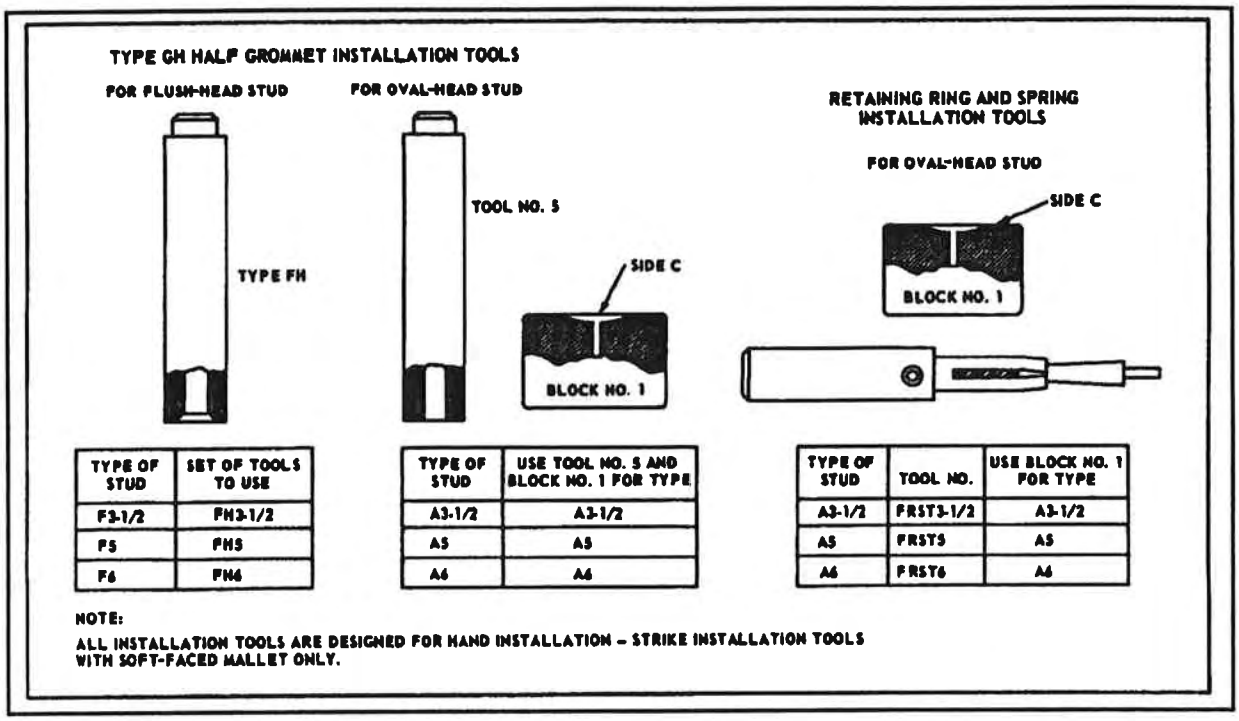

TYPE OF STUD	SET OF TOOLS TO USE
F3-1/2	FH3-1/2
F5	FH5
F6	FH6

TYPE OF STUD	USE TOOL NO. 5 AND BLOCK NO. 1 FOR TYPE
A3-1/2	A3-1/2
A5	A5
A6	A6

TYPE OF STUD	TOOL NO.	USE BLOCK NO. 1 FOR TYPE
A3-1/2	FRST3-1/2	A3-1/2
A5	FRST5	A5
A6	FRST6	A6

NOTE:
ALL INSTALLATION TOOLS ARE DESIGNED FOR HAND INSTALLATION – STRIKE INSTALLATION TOOLS WITH SOFT-FACED MALLET ONLY.

Figure 7-30. Installation tools for stud, grommet, and receptacle (Dzus fastener)

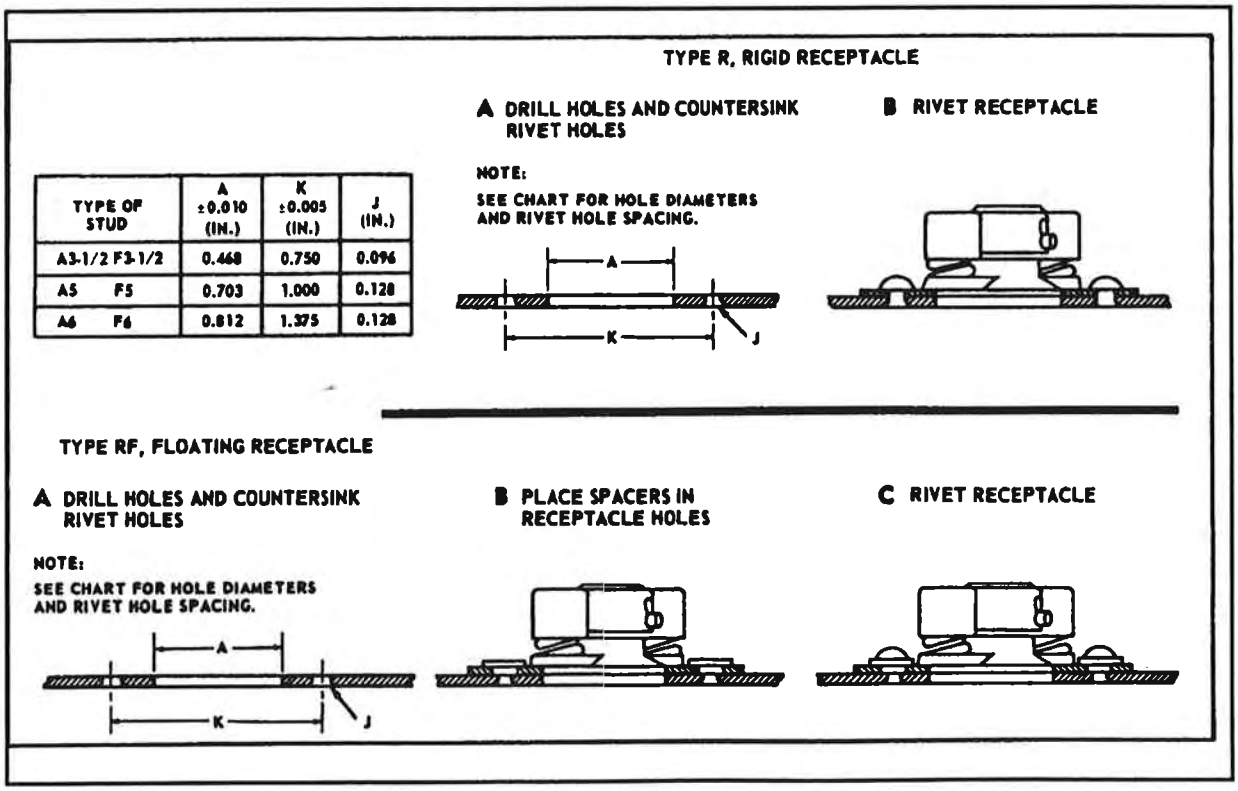

TYPE OF STUD	A ±0.010 (IN.)	K ±0.005 (IN.)	J (IN.)
A3-1/2 F3-1/2	0.468	0.750	0.096
A5 F5	0.703	1.000	0.128
A6 F6	0.812	1.375	0.128

Figure 7-31. Receptacle installation (Dzus fastener)

Downloaded from http://www.everyspec.com

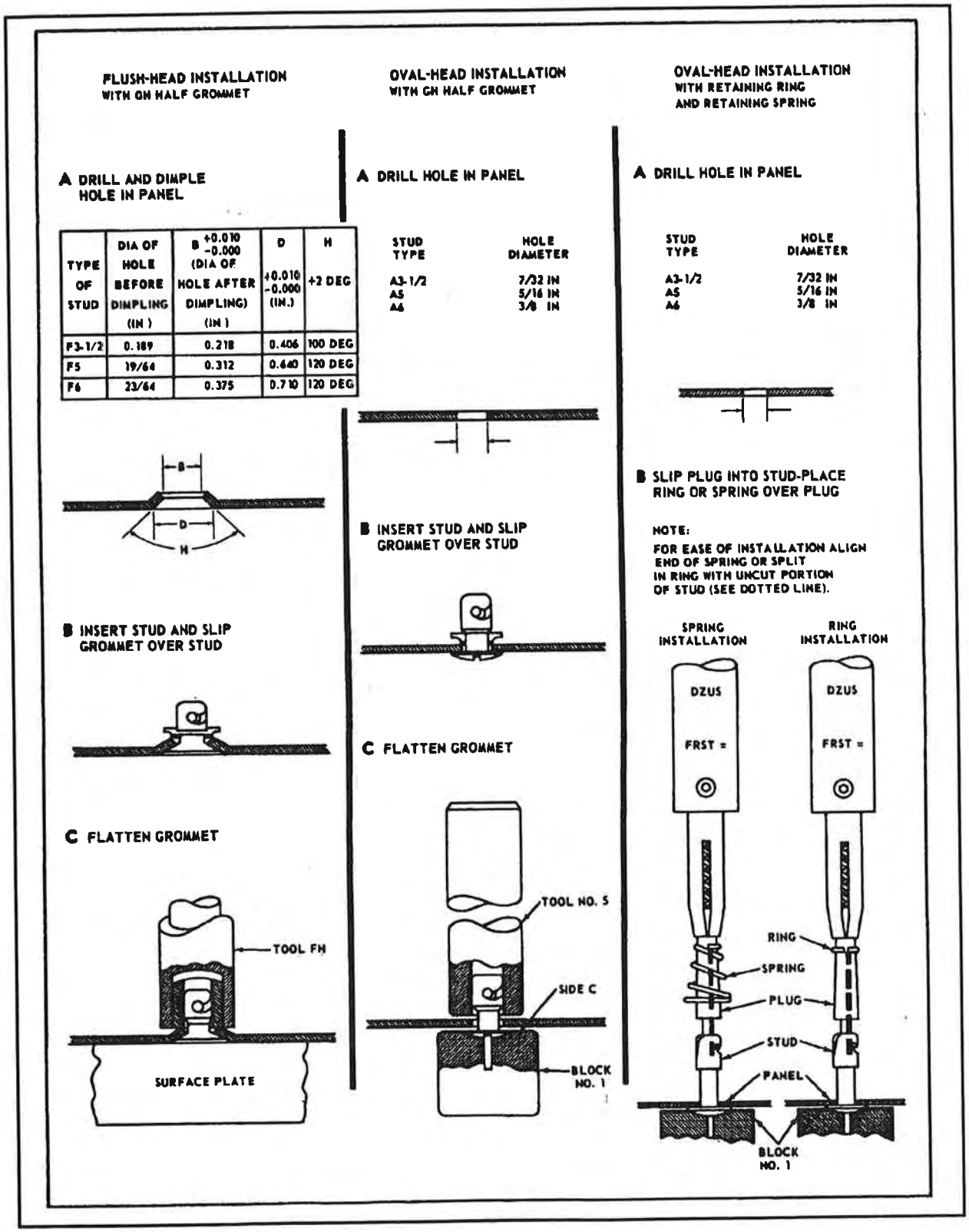

TYPE OF STUD	DIA OF HOLE BEFORE DIMPLING (IN)	B +0.010 -0.000 (DIA OF HOLE AFTER DIMPLING) (IN)	D +0.010 -0.000 (IN.)	H +2 DEG
F3-1/2	0.189	0.218	0.406	100 DEG
F5	19/64	0.312	0.640	120 DEG
F6	23/64	0.375	0.710	120 DEG

STUD TYPE	HOLE DIAMETER
A3-1/2	7/32 IN
A5	5/16 IN
A6	3/8 IN

STUD TYPE	HOLE DIAMETER
A3-1/2	7/32 IN
A5	5/16 IN
A6	3/8 IN

Figure 7-32. Stud and grommet (lock ring) installation (Dzus fastener)

Downloaded from http://www.everyspec.com

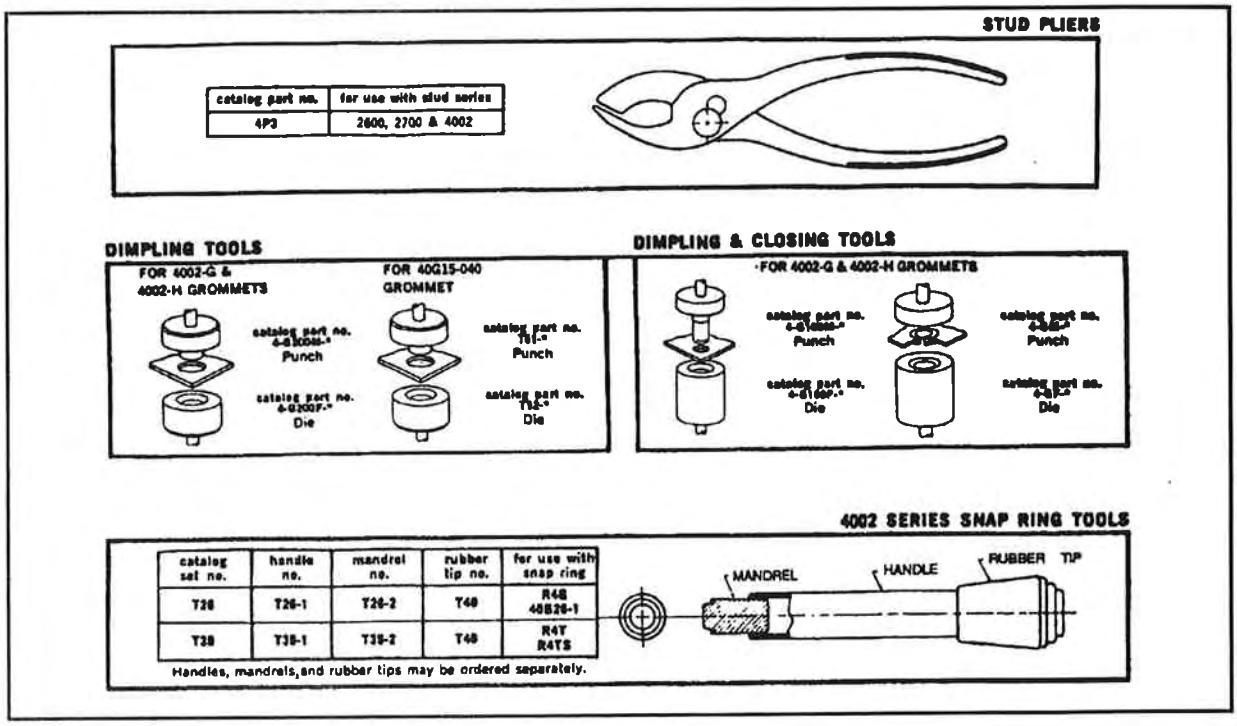

Figure 7-33. Installation tools (4002 series)

Dzus Fastener

Center-punch heads of rivets that secure the spring or receptacle. Drill through the rivet heads, using a drill slightly smaller than the diameter of the rivet shank. Remove the rivet heads with a hammer and chisel. Punch the rivet shanks from the hole. Remove the spring or receptacle. Drive the stud through the grommet with a wooden block or mallet. Cut the grommet from the hole with a chisel or similar tool.

Camloc Fastener

Center-punch the heads of rivets that secure the receptacle. Using a drill slightly smaller than the diameter of the rivet shank, drill through the rivet heads. Remove the rivet heads with a hammer and chisel. Punch the rivet shanks from the hole. Remove the receptacle.

Using Camloc pliers, depress the spring of the stud assembly and remove with a twisting motion. Being careful not to tear or enlarge the hole in the panel, cut through the grommet with a pair of cutting pliers and remove it.

2600- AND 2700-SERIES STUD ASSEMBLIES

Refer to Figures 7-34 thru 7-39.

Downloaded from http://www.everyspec.com

2600-SERIES STUD ASSEMBLIES

- 300 lbs ultimate shear & tensile strength
- 200 lbs rated shear & tensile strength
- .030 stud increments

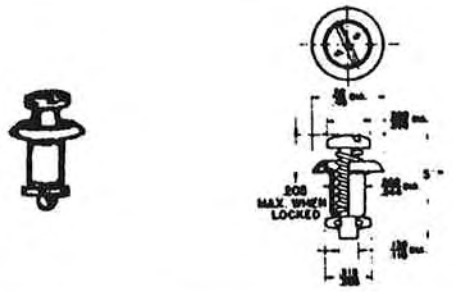

SLOTTED HEAD

part no.	material	temp.
2600-*	Steel	450°F
†2600-*S	Stainless Steel	700°F
†26S26-*	Stainless Steel (Non Mag)	700°F
26S26-*B	Beryllium Copper (Non Mag)	Consult Camloc
26S38-*	Steel (Chrome Plated)	450°F
26S42-*	Steel (Nickel Plated)	450°F

S = .73 + (.03 × Dash No.)

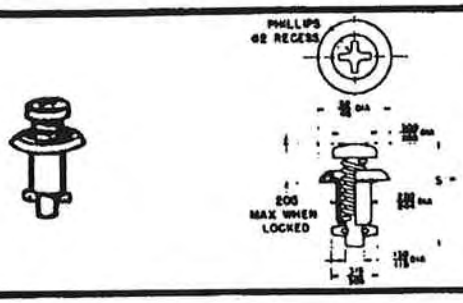

CROSS RECESS

part no.	material	temp.
26S8-*	Steel	450°F
26S39-*	Steel (Nickel Plated)	450°F

S = .73 + (.03 × Dash No.)

WING HEAD

part no.	material	temp.
2600-*W	Steel	450°F
†2600-*SW	Stainless Steel	700°F
†26S36-*	Stainless Steel (Non Mag)	700°F
26S37-*	Steel (Nickel Plated)	450°F

S = .73 + (.03 × Dash No.)

Figure 7-34. 2600-series stud assemblies

Downloaded from http://www.everyspec.com

2600-SERIES STUD INSTALLATION DATA

.125 MAXIMUM MATERIAL THICKNESS

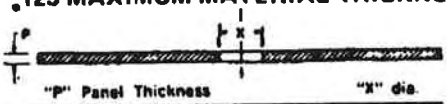

"P" Panel Thickness	"X" dia.
.030 to .065	.257
.065 to .125	.281

Install with pliers 4P3 Stud is self-captivating from size -1 thru -4 because the cross pin rests against the spring cup in the unlocked position. For stud length -5 or longer, use retaining washer.

.126 & GREATER MATERIAL THICKNESS

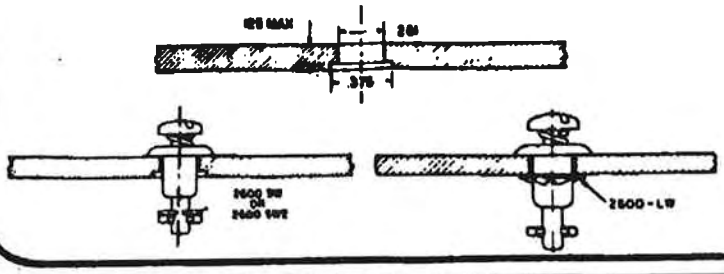

Drill stud clearance hole .281 then back counterbore .375 dia to remaining thickness of .125 Install stud assembly with 4P3 pliers and attach washer between stud spring cup and cross pin.
Receptacle material requires .500 dia clearance hole for 2600-LW washer.
Insert stud and press 2600 LW washer over spring cup with tool no. T98 or equal.

.020 to .187 MATERIAL THICKNESS

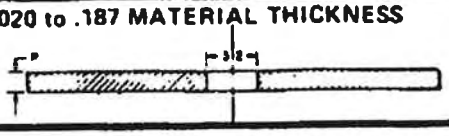

When lateral movement (float) of the stud is desired for severe misalignment conditions, drill .312 dia stud clearance hole.

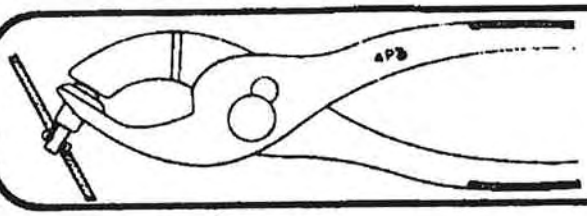

Compress stud spring with 4P3 pliers, insert stud into panel, and release.

DO NOT REMOVE THE STUD CROSS PIN UNDER ANY CIRCUMSTANCES.

Used for 2600 Series
2700 Series

Figure 7-35. 2600-series stud installation data

Downloaded from http://www.everyspec.com

2700-SERIES STUD ASSEMBLIES (FLUSH)

- 300 lbs ultimate shear & tensile strength
- 200 lbs rated shear & tensile strength
- .030 stud increments

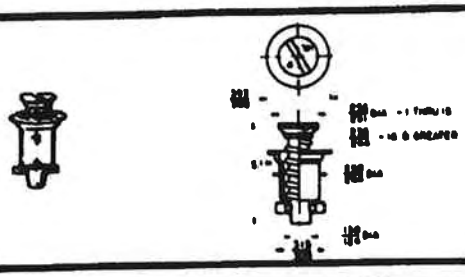

SLOTTED HEAD

part no.	material	temp.
2700-*	Steel	450°F
†2700-*S	Stainless Steel	700°F
†27S12-*-1AA	Stainless Steel (Non Mag)	700°F
27S12-*-1BB	Beryllium Copper (Non Mag)	CONSULT REXNORD

S = .58 · (.03 · Dash No.)

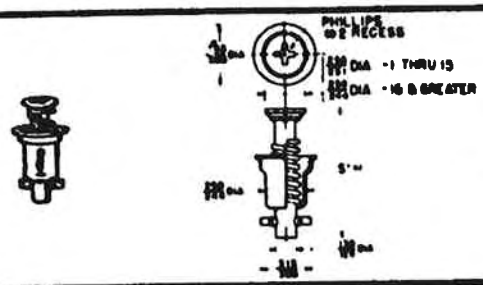

CROSS-RECESS HEAD

part no.	material	temp.
27S3-*	Steel	450°F

S = .58 · (.03 · Dash No.)

Consult Rexnord for additional Headstyles. † For strength characteristics, consult Rexnord. * Insert stud length dash no. refer to page 8.

Figure 7-36. 2700-series stud assemblies (flush)

Downloaded from http://www.everyspec.com

2700-SERIES STUD INSTALLATION DATA

.072 MAXIMUM MATERIAL THICKNESS

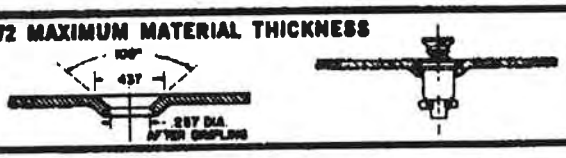

Drill # 3 (.213) dia hole. Dimple with dimpling tools No. 2-S200M & F or equal. Ream .257 hole if necessary. Install stud assembly with 4P3 pliers.

.073 & GREATER MATERIAL THICKNESS

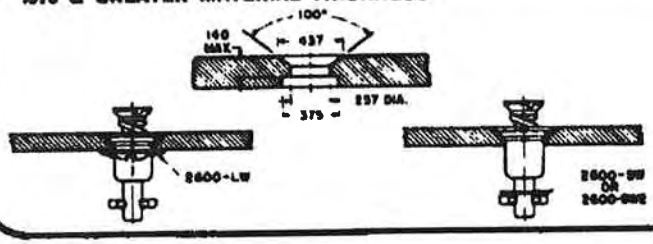

Drill "F" (.257) dia hole and countersink face of panel as shown. For panels of greater than .140 thickness back counterbore .375 dia to remaining thickness of .140. Install stud assembly with 4P3 pliers and attach retaining washer (see below for selection).

2600- & 2700-SERIES RETAINING WASHERS

Retaining washers are required for stud assemblies of lengths -5 or greater. Use split washer, 2600-SW, or 2600-SW2, for applications where it is desirable to have the stud fall away for minimum internal projection. For complete ejection required on sliding approaches, mount stud on ejector spring. Use internal tooth washer, 2600-LW, where it is desirable to retain the stud assembly rigidly. For proper installation, it is recommended that tool, part no. T98-1, be used. For maximum float when severe misalignment is anticipated, use oversize .312 diameter hole for the stud assembly and captivate with 2600-LW solid washer.

SPLIT WASHER

part no.	material	temp.
2600-SW2	Steel	450°F
†2600-SW	Stainless Steel	700°F

Wt Per 100 — 0.03 lbs

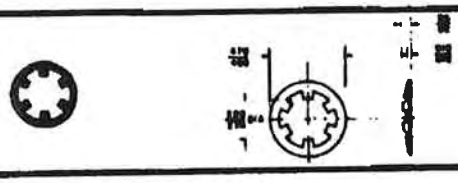

SOLID WASHER

part no.	material	temp.
2600-LW	Steel	450°F

Wt Per 100 — 0.04 lbs

2600- & 2700-SERIES RECEPTACLES

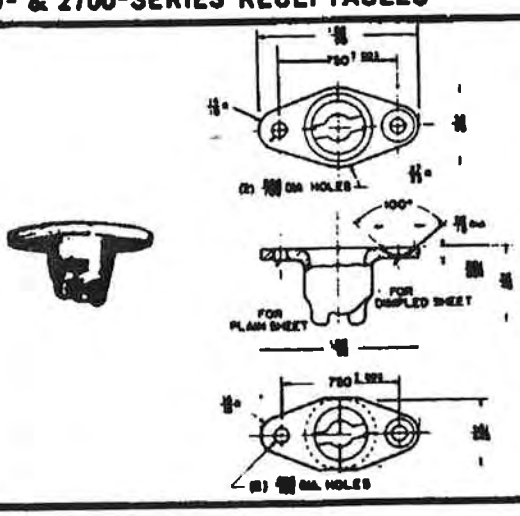

part no.	material	temp	rivet holes
212-12	Copper Base Alloy	450°F	Plain
212-12D	Copper Base Alloy	450°F	C'Sunk
212-12A	Aluminum Alloy (Anodized)	350°F	Plain
†212-12S	Stainless Steel (Non Mag-Red Dye)*	750°F	Plain
†212-12SD	Stainless Steel (Non Mag-Red Dye)*	750°F	C'Sunk
†212-32	Stainless Steel (Non Mag (No Red Dye Identification)†	750°F	Plain

NARROW WIDTH TYPE

part no.	material	temp	rivet holes
212-12N	Copper Base Alloy	450°F	Plain
212-12ND	Copper Base Alloy	450°F	C'Sunk

† For strength characteristics, consult Rexnord.

Figure 7-37. 2700-series installation data

Downloaded from http://www.everyspec.com

2600- & 2700-SERIES RECEPTACLES

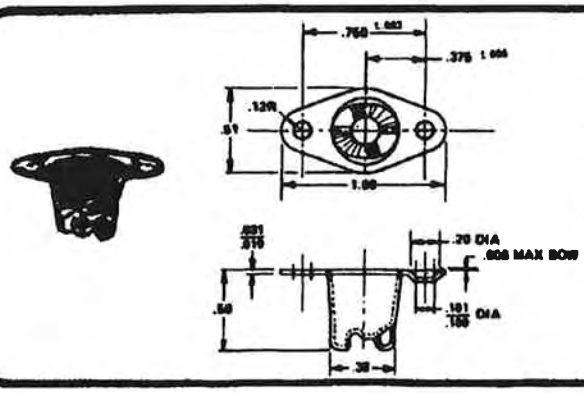

LIGHT WEIGHT TYPE

part no.	material	temp	rivet holes
26R6-1BB	Steel	450°	Plain
26R6-4BB	Steel	450°	C'Sunk

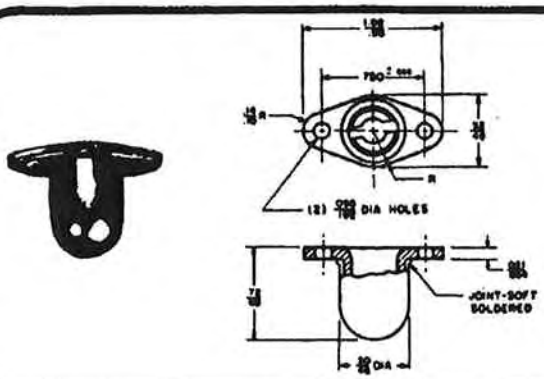

SEALED TYPE (air, water, & dust seal)

part no.	material	temp	rivet holes
26R16-1	Copper Base Alloy	300°F	Plain
26R16-2	Copper Base Alloy	300°F	C'Sunk

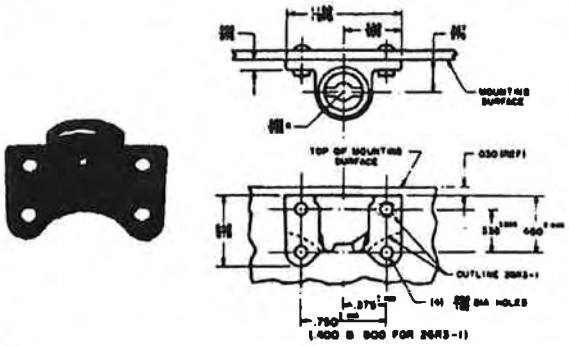

SIDE MOUNT TYPE

part no.	material	temp	rivet holes
26R1-1	Aluminum Alloy	350°F	4
26R1-5	Aluminum Alloy w/Hard Coat	350°F	4
26R3-1	Aluminum Alloy	350°F	2

Figure 7-38. 2600- and 2700-series receptacles

Downloaded from http://www.everyspec.com

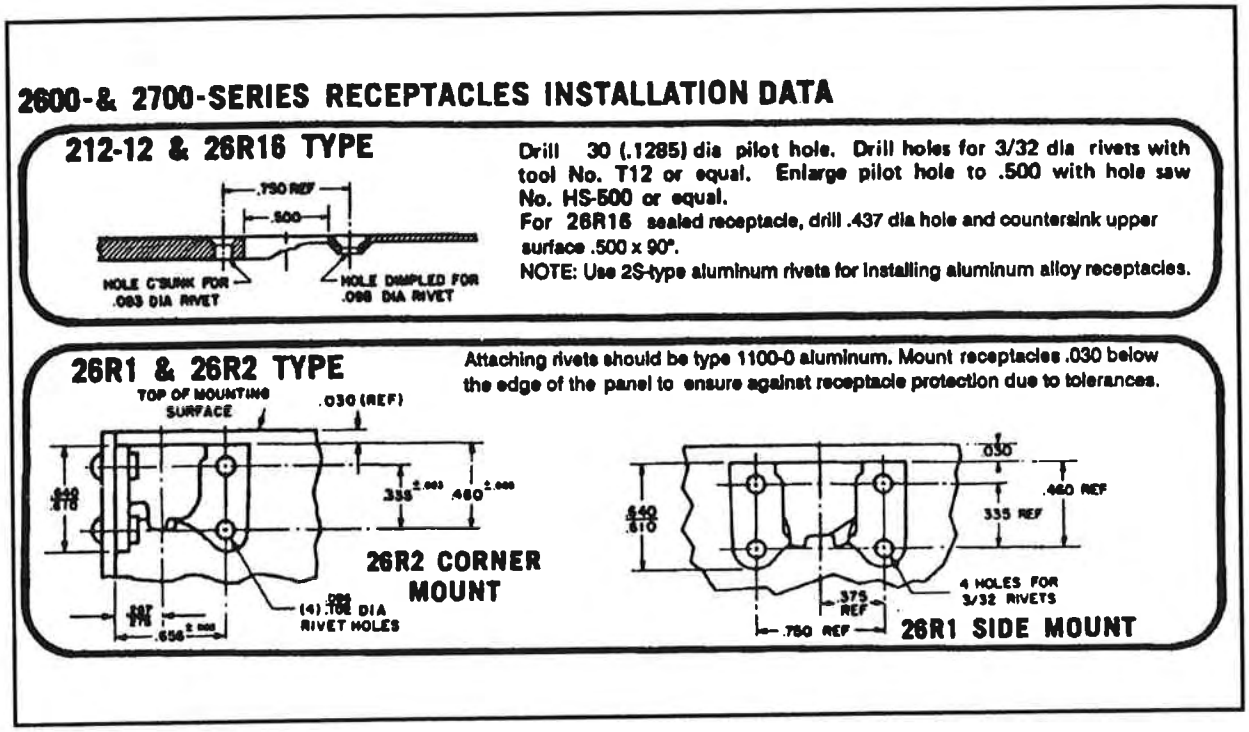

Figure 7-39. 2600- and 2700-series receptacles installation data

Downloaded from http://www.everyspec.com

CHAPTER 8

AIRFRAME REPAIR

No field manual can cover all possible aircraft structural repairs. However, by working within the general rules of fabrication and structural repair discussed in this chapter, airframe repairers can make sound and durable repairs. Remember that structural repair on aircraft represents a custom fabrication designed to deal with specific damage and surrounding circumstances.

BASIC PRINCIPLES

Strength

With any repair certain fundamental rules apply in order to maintain the original strength of the structure:

- The patch plate should have a cross-sectional area equal to or greater than that of the original damaged section.
- If the member is subjected to compression or bending load, the patch should be placed on the outside to obtain a higher resistance to such loads. If the patch cannot be placed there, use material one gage thicker than the original for the repair.
- Cutouts should be either circular or oval to help prevent cracks starting from the corners, which would occur if cutouts were square or rectangular. Where a rectangular cutout must be made, the radius of curvature at each corner must be not less than ½ inch. Replace buckled or bent members or reinforce them by attaching a splice over the affected area.
- The material used in all replacements or reinforcements must be similar to that used in the original structure. If an alloy weaker than the original must be substituted for it, use material of a heavier gage to give equivalent cross-sectional strength. Do not substitute a lighter-gage, stronger material for the original; one material can have greater tensile but less compressive strength than another or vice versa. The comparison of the mechanical properties of 2024-T4 and 7075-T6 aluminum alloys in the following bullet gives an example of this principle.
- If aluminum alloy 2024-T4 were substituted for aluminum alloy 7075-T6, the substitute material would need to be thicker – unless the reduction in compression strength was acceptable. Also, the buckling and torsional strength of many sheet metal and tubular parts depends primarily on the thickness of material rather than its allowable compressive and shear strengths. Therefore, a substitute alloy material thinner than the original considerably reduces the buckling and torsional strength of a part, even though the substitute has greater compressive and shear strengths. (See metal substitution chart, Figure 8-1.)
- Care must be taken when forming. Heat-treated and cold-worked aluminum alloys can stand very little bending without cracking. On the other hand, soft alloys are easily formed but are not strong enough for primary structures. Strong alloys can be formed in their annealed condition and heat-treated to develop their strength before assembling.
- In some cases when the metal is not available in an annealed condition, it can be heated, quenched according to normal heat-treating practices, and formed before age hardening sets in. Forming should be completed within half an hour after quenching; otherwise, the material will become too hard to work. If a brake is used to form a section, place a thin piece of soft metal over the brake jaws to prevent scraping and scratching the surface of the sheet.
- The size rivets to use for any repair can be determined by examining rivets used by the manufacturer in the next parallel row of rivets inboard on the wing or forward on the fuselage. Another method of determining rivet size is to multiply the thickness of the skin by 3 and then use the next larger-sized rivet corresponding to the product number. For example, if skin thickness is 0.040 inch, multiply 0.040 inch by 3 to get 0.120 inch, and use the next larger size rivet, ⅛ (0.125) inch.

Downloaded from http://www.everyspec.com

- A specific number of rivets are needed to restore the original strength of aircraft structural parts. The number varies with the thickness of the material being repaired and the extent of damage. Determine the number of rivets required by referring to a similar splice made by the manufacturer or by using the rivet formula in this chapter.

Contour

All repairs must be formed to fit the original contour perfectly. A smooth contour is essential when making patches on the smooth external skin of any aircraft.

Weight

The weight of all repair materials must be kept to a minimum. Patches should be as small as possible using no more rivets than necessary. In many cases repairs disturb the original balance of the structure. Adding excessive weight may make the aircraft so unbalanced that trim and balance tabs will require readjustment.

STRUCTURAL REPAIR

Aircraft structural members are designed to serve a definite purpose or perform a specific function. The primary objective of aircraft repair is to restore the

ALUMINUM AND STEEL

ORIGINAL MATERIAL 2024-T3/4 OR 7075-T6	2024-T3 CLAD REINFORCEMENT FOR 2024-T4	2024-T3 CLAD REINFORCEMENT FOR 7075-T6	7075-T6 REINFORCEMENT FOR 7075-T6 OR 2024-T3/4	4130 REINFORCEMENT FOR 2024-T4 OR 7075-T6
0.020	0.025	0.032	0.025	0.025
0.025	0.032	0.040	0.032	0.032
0.032	0.040	0.050	0.040	0.036
0.040	0.050	0.063	0.050	0.050
0.050	0.063	0.080	0.063	0.063
0.063	0.063	0.100	0.071	0.071
0.071	0.071	0.125	0.080	0.080
0.080	0.080	0.125	0.090	0.090
0.090	0.090	0.160	0.100	0.100
0.100	0.100	0.160	0.125	0.112
0.125	0.125	0.160	0.160	0.125

CORROSION RESISTANT STEEL

ORIGINAL MATERIAL	REINFORCEMENT*
301 ANL	301 ANL, 1/4H, 1/2H, 3/4H, H. 302 ANL. 17-7PH ANL, 180 KSI
301 1/4H	301 1/4H, 1/2H, 3/4H, H. 17-7PH ANL, 180KSI
301 1/2H	301 1/2H, 3/4H, H. 17-7PH 180KSI
301 3/4H	301 3/4H, H
301 H	301 H
302 ANL	301 1/4H, 1/2H, 3/4H, H. 302 ANL. 17-7PH ANL, 18KSI
17-7 ANL	17-7PH ANL, 180KSI
17-7 180KSI	17-7PH 180KSI

*REINFORCEMENT MATERIAL THICKNESS TO BE SAME AS ORIGINAL

NOTES

1. ALL DIMENSIONS ARE SHOWN IN INCHES UNLESS OTHERWISE NOTED
2. THIS CHART MAY BE USED TO SELECT A REINFORCEMENT, WHEN A SPECIFIC REPAIR FIGURE, DENOTING A SPECIFIC REPAIR MATERIAL, DOES NOT EXIST FOR A PARTICULAR PART

AV 104876
114-452-3436

Figure 8-1. Metal substitution chart

Downloaded from http://www.everyspec.com

damaged part to its original condition. Very often replacing the part is the only way to do this effectively. When a damaged part can be repaired, analyze it carefully to understand its purpose or function fully.

Strength may be the chief requirement in repairing certain structures, while others may require entirely different considerations. For example, fuel tanks, floats, and hulls must be protected against leakage; but cowlings, fairings, and similar parts must have such attributes as neat appearance, streamlined shape, and accessibility. Determine the function of any damaged part carefully before repairing it.

Damage Inspection

When making a visual inspection of damage, remember that there may be damage other than that caused by flying missiles, such as flak from outside the aircraft. A rough landing may overload a landing gear, causing it to become sprung. This is classified as load damage. During inspection and evaluation of the repair job, consider how far the damage caused by the sprung shock strut extends to supporting structural members.

A shock occurring at one end of a member will be transmitted throughout its length. Therefore, all rivets, bolts, and attaching structures along the complete member must be inspected for evidence of damage; for example, rivets that have partially failed, holes that have been elongated, and so on.

Another kind of damage to watch for is corrosion damage. In aluminum alloy material the white crystalline deposit found around loose rivets and scratches indicates corrosion damage. Corrosion may occur in any part of the structure where moisture settles.

If visual inspection of inside skin surfaces cannot be made without disassembly, inspect the part by rapping the skin in various places with your knuckles. A simple visual inspection cannot accurately determine whether suspected cracks in major structural members actually exist, nor can it ascertain the full extent of the apparent cracks. Because major structural members are vital, determine the extent of cracks in them by nondestructive inspection. Materials needed to perform a nondestructive inspection are available in a complete inspection kit. See TM 55-1500-335-23 for instructions on materials and procedures.

WARNING

Materials used for dye penetrant inspection, especially the dye developer, are potentially dangerous flammable liquids. Follow all safety precautions strictly, including—

- **Apply materials only in well-ventilated areas away from any possible source of spark or flame.**
- **Avoid prolonged breathing of vapors given off by the materials.**
- **Use protective clothing, such as gloves, goggles, aprons, and respirators.**
- **Wash contaminated skin promptly with soap and water.**
- **Change contaminated clothing immediately and wash it before reuse.**

Corrosion Control

Corrosion control and treatment are very important to all aircraft maintenance personnel. Corrosion in equipment or primary structures can seriously reduce the capability, operation, and structural integrity of an aircraft. Economy is another important reason for corrosion control and treatment. Severe corrosion can ultimately weaken primary structures to the point where they must be replaced or reinforced to sustain designated loads. Weakening usually requires a major repair that can be costly and time-consuming, resulting in a less effective aircraft. Although most metals are subject to corrosion, it can be reduced by using corrosion-resistant metals and finishes, when consistent with the weight and strength design factors of the aircraft. The principal corrosion preventative used in airframe structures is aluminum alloy sheets coated on both sides with pure aluminum, commonly known as alclad. Under normal conditions, alclad aluminum is highly resistant to corrosion; however, accumulated soil, salts, industrial fumes, and moisture can cause pitting of the alclad surface. Nonclad metals require special preventive measures. For example, aluminum alloys are usually either anodized or chemically treated and painted. The internal structure of an airframe is usually painted with an organic finish. Steel, except for most stainless steels, and metals such as bronze and brass

Downloaded from http://www.everyspec.com

require cadmium or zinc plating, conversion coating, paint, or all three, for protection. Magnesium requires special chemical treatments and paint finishes. See TM 55-11500-344-23 and TB 43-0209 for complete information on inspection, detection, repair, and prevention of corrosion on Army aircraft.

Damage Classification

After the extent of damage is determined, classify it under one of the following categories:

- Negligible damage.
- Damage repairable by patching.
- Damage repairable by insertion.
- Damage requiring replacement of parts.

In many cases the availability, or lack, of repair materials and time determines whether a part should be repaired or replaced.

Negligible or minor damage is damage that does not affect the structural integrity of the member involved or that can be corrected by a simple procedure without placing flight restrictions on the aircraft. This class of damage includes small dents, scratches, cracks, and holes. They can be repaired by smoothing, sanding, stop drilling, hammering out, or other means that do not require additional materials. Or no action may be required.

Damage repairable by patching is any damage exceeding the limits of negligible damage (usually, 25 percent or less of the total panel section) that can be repaired by bridging the damaged area of a component with a splice material. The splice or patch material used in internal or riveted and bolted repairs is normally the same type as the material of the damaged part, only one gage heavier. In a patch repair, filler plates of the same gage and type of material as the damaged component can be used for bearing purposes or to restore the damaged part to its original contour.

Damage repairable by insertion is damage that can be repaired by cutting away the damaged section, replacing the removed portion with an identical section of the damaged component, and securing the insertion with splices at each end.

Damage requiring replacement of parts is damage that involves one or more of the following conditions:

- A complex part is severely damaged.
- The structure surrounding a part or the part's inaccessibility makes repair impractical.
- It is economically feasible to replace the damaged part; for example, when it is locally manufactured.
- Forged or cast fittings are damaged beyond the limits of negligible damage.

Structural Member Stresses

Various forces acting on an aircraft both on the ground and in flight cause pulling, pushing, or twisting of various aircraft structural members. On the ground the weight of the wings, fuselage, engines, and empennage causes exertion of forces downward on the wing and stabilizer tips, along the spars and stringers, and on the bulkheads and formers. These forces are transmitted from member to member, causing bending, twisting, pulling, compression, and shearing. The five types of stress in an aircraft are tension, compression, shear, bending, and torsion (or twisting). The first three are commonly known as basic stresses, the last two as combination stresses. These stresses rarely act singly but in combination. From an airframe repairer's standpoint, the most important types of stress are bending, torsion, and shear. Refer back to Chapter 2, Figure 2-1, for an illustration of structural member stresses.

Tension (Tensile Stress)

Tension is the force per unit area that tends to stretch a structural member. For example, drilling a hole in a metal strip removes much of the material and reduces its cross-sectional area. Because the load is constant from one end of the strip to the other and the hole cannot carry any of the load, the stress in the reduced section is greatly increased (per unit area). The area on each side of the hole is carrying both its normal share of the load and also that part of the load that should have been carried by the material that was removed. If the load were increased until the strip broke, the material would fail near the hole. The strength of a member in tension is determined based on its gross (total) area, but calculations involving tension must consider the net area of the member. Net area equals the gross area minus the area removed by drilling holes or by making other changes in the section. Installing rivets or bolts in holes does not add appreciably to their strength because the rivets or bolts will not transfer tensional loads across holes in which they are installed.

Downloaded from http://www.everyspec.com

Compression (Compressive Stress)

Compression is the force per unit area that tends to shorten, or compress, a structural member at any cross section. Under a compressive load, an undrilled member will be stronger than an identical member with holes drilled through it. However, if a plug of compatible or stronger material is fitted tightly in a drilled member, it will transfer compressive load across the hole and the member will carry about as large a load as if there were no hole. Thus, for compressive loads, the gross or total area may be used to determine the stress in a member if all holes are tightly plugged with compatible or stronger material.

Shear

Shear is the force per unit area that acts to slide adjacent particles of material past each other. The term shear is used because it is a sideways stress of the type that is applied on a piece of paper or sheet of metal when it is cut with a pair of shears. If a rivet used in a shear application fails, its parts are pushed sideways.

Bending (Beam Stress)

Figure 8-2 is a combination of two forces acting on a structural member at one or more points. In Figure 8-2, note that the bending stress causes a tensile stress to act on the top surface of the beam and a compressive stress to act on the under surface. These stresses act in opposite directions on the two sides of the member's centerline, called the neutral axis. Since these opposing forces are next to each other at the neutral axis, the greatest shear stress occurs along this line, while none occurs at the extreme upper or lower surfaces of the beam.

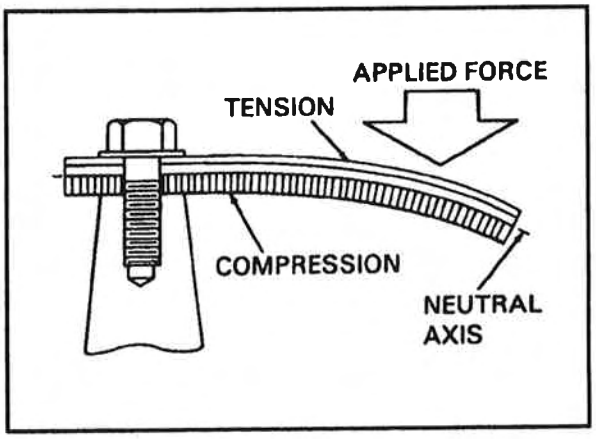

Figure 8-2. Bending.

Torsion (Twisting Stress)

Torsion is the force that tends to twist a structural member. The stresses resulting from this action are shear stresses caused by the rotation of adjacent planes past each other around a common reference axis at right angles to the planes. An example of this action would be a rod fixed solidly at one end and twisted by a weight placed on a lever arm at the other end. This produces the equivalent of two equal and opposite forces operating on the rod at some distance from each other. A shearing action is set up all along the rod, with the centerline of the rod representing the neutral axis.

GENERAL REPAIR PRACTICES

Structural Support During Repair

The aircraft should be firmly supported during the repair of any major structural member so that repair work can be completed without any misalignment or distortion. This support procedure is known as removing the static load. When special support fixtures for the aircraft or any of its components are not available, fabricate temporary supports that can support the weight of the aircraft or component. Rope off the area around the aircraft entirely and post signs near it with the warning: KEEP OFF - AIRCRAFT ON JACKS.

Damage Evaluation

Before starting any repair, evaluate the extent of the damage fully to determine if repair is authorized (see applicable aircraft maintenance manual allocation chart) or practical. The evaluation should identify the original alloy and the type of repair required. This will expedite the remaining repair steps.

Repair Parts Layout

All new sections fabricated for repairing or replacing damaged parts in a given aircraft should be carefully laid out to the dimensions listed in the applicable aircraft manual before fitting the parts into the structure. Take care when marking to prevent scratching the material; deep scratches can seriously weaken it and might develop into cracks. Use a nongraphite pencil to mark unpainted aluminum alloy (except to mark cut lines). If a graphite pencil is used on bare aluminum, remove all traces before using the metal on aircraft.

Downloaded from http://www.everyspec.com

Rivet Selection

Normally, the rivet size and alloy should be the same as for the original rivets in the part being repaired. If a rivet hole has been enlarged or deformed, use the next larger-size rivet after reworking the hole. When rivets are replaced with larger-size rivets, maintain the proper edge distance for the larger-size rivet. Where the inside of the structure is impossible to access, blind rivets may be used to make the repair. Always refer to the applicable aircraft manual for the recommended type, size, spacing, and number of rivets needed to replace either the original installed rivets or those required for the repair being performed.

Rivet Spacing and Edge Distance Layout

The rivet pattern for a repair must conform to instructions in the applicable aircraft manual. If they are not specified, use the layout procedures listed in this manual.

Corrosion Treatment

After all forming and machining operations for the repair have been made but before the parts are riveted together, treat all metal parts for corrosion and seal them according to instructions in the applicable aircraft manual.

Riveting

When riveting all parts together in the final steps of repair, be sure to consider proper shop head height and the overall neatness of the repair.

Tolerance

Unless otherwise stated by the applicable aircraft manual or engineering specifications, all measurements and repairs should be made with a tolerance of ±1/64.

Chem-Milled Skin Repair

A chem-milled structural member varies in thickness from end to end or from side to side. Therefore, repairing a damaged chem-milled member requires a procedure slightly different from standard repair procedures. The repair material must be as thick as the thickest part of the chem-milled structure. Apply the repair material, if practical, to the thickest part of the damaged member, using normal riveting procedures. Use shimming to fill the gap between the repair material and the thin part of the chem-milled structural member. Secure the shim material with rivets that pass through the damaged part, the shim material, and the repair material. Lap-patch or flush-patch techniques may be used provided the repair material is secured to the thick portion of the chem-milled part.

Stressed Skin Repair

Another important factor to consider when repairing stressed skin is the stress intensity of the damaged panel. For example, various specific skin areas are classified as highly critical, semicritical, noncritical, or primary structural skin. Repairs to damage in highly critical areas must provide 100 percent strength replacement. To apply a primary skin (stressed) patch, see paragraph, PRIMARY (STRESSED) SKIN REPAIR, below.

DAMAGE REMOVAL AND FASTENER LAYOUT

The basic rule when removing damaged areas is not to cause more damage. The first step is to decide how much undamaged area should be removed along with the damaged area. After calculating this, develop a layout of the cutout on the damaged area. The layout will serve as a guideline during removal. You must consider the location of the damaged area, whether it is in an open area or near a substructural member. Also consider the final size of the patch, including the complete fastener layout, when developing the layout of the cutout.

Open Area

An open area is one where there is no substructural member, such as a stringer, within the damaged area. In such a case, your prime concern is removing the damage. As you develop the layout of the cutout, remember that correct size and relief of stress concentration are very important.

Cutoff Size

The size of the cutout should include anything that has changed the configuration of the area. The size should be practical so that you can develop a proper size patch. Don't miniaturize your cutout to a point where it would be difficult to use it to fabricate a filler plate. On the other hand, don't cut away an excessive amount of the undamaged skin area. You will have to decide on the size of the cutout based on your experience and observation of the area you are repairing.

Downloaded from http://www.everyspec.com

Stress Relief

When damage cutouts are made which are other than circular, it is necessary to have a radius on the inside corners in order to prevent creation of a high-stressed area at the corner of the cutout. The size of the corner radius is normally 1/4 inch unless another size is specified in the technical manual.

Substructural Areas

When a cutout must be made near or over a substructural member, consider the edge distance from the cutout to the nearest fastener and allowances for the fastener and fastener spacing required in the filler and doublers.

Edge Distance

The outer edges of the cutout must be edge distance from existing fasteners. This allows the proper edge distance to be maintained from the existing fastener to the edge of the cutout when the cutout is made. At the same time, this establishes the location of the first row of fasteners needed for the doublers.

Rivet Spacing

Rivet spacing allowance must be considered when the cutout area is near a substructural member. Be sure to allow adequate space on both sides of the cutout area for the fastener layout. It may be necessary to make the cutout area larger by extending the cutout over the substructural member to the opposite side to have enough space for the required fastener layout in the filler and doublers. As you develop a layout for the cutout, remember to consider the total area required for the repair parts.

Patches

When repairing a damaged component, first consult the applicable section of the technical manual for that aircraft. Normally, a similar repair will be illustrated along with the types of material, rivets, rivet spacing, and procedures to use. If you cannot find the necessary information in the technical manual, try to find a similar repair or assembly installed by the manufacturer of the aircraft. Whether the damage is exterior or interior will directly affect the type of patch you install – external or internal.

External

There are two types of external patches: flush and nonflush.

Flush skin repair. You can repair damage to the outside skin of an aircraft by applying a patch to the inside of the damaged sheet. Install a filter plug in the hole made by the removal of the damaged area. The plug stops the hole and forms the smooth outside surface needed for aerodynamic smoothness.

Determine the size and shape of the patch by the size of the cutout and the number of rivets required in the repair. Normally, the number of repair parts for a flush repair is two – a filler and a backing plate made near a substructural member. Up to four doublers may be needed. The doubler is fabricated from the same type of material as the original and should be one gage heavier than the skin panel. It acts both as a reinforcement to the repair area and as a surface for attaching the filler plate.

A filler plate is used to restore and maintain the aerodynamic shape of the skin surface. It should be manufactured from the same type and thickness of material as the original skin. Before the repair parts are fastened together, curve both the doubler and the filler to the precise contour of the repair area. Allow a maximum clearance of 1/32 inch between the edges of the filler and the skin. A sealant can be used to fill this space and maintain skin smoothness.

Figure 8-3 shows typical flush skin repairs. For example, a circular repair is an ideal patch for places where the direction of stress is unknown or where it is known to change frequently. Obviously, the actual shape of the repair varies according to its location.

Nonflush skin repair. Nonflush skin repairs (Figures 8-4 and 8-4A) are used primarily where aerodynamic smoothness is not critical, and they are permitted by the technical manual. Generally, repair patches, normally referred to as overlay or scab patches, are fabricated from the same material composition as the original material. The thickness of the patch is the same gage or one gage heavier, depending on the applicable guidelines in the technical manual. The edges of the patch are chamfered to a 45° angle and turned slightly downward, so that they will fit close to the surface. Protruding-head-style rivets are generally used to hold the repair in place, unless otherwise specified in the applicable technical manual.

Downloaded from http://www.everyspec.com

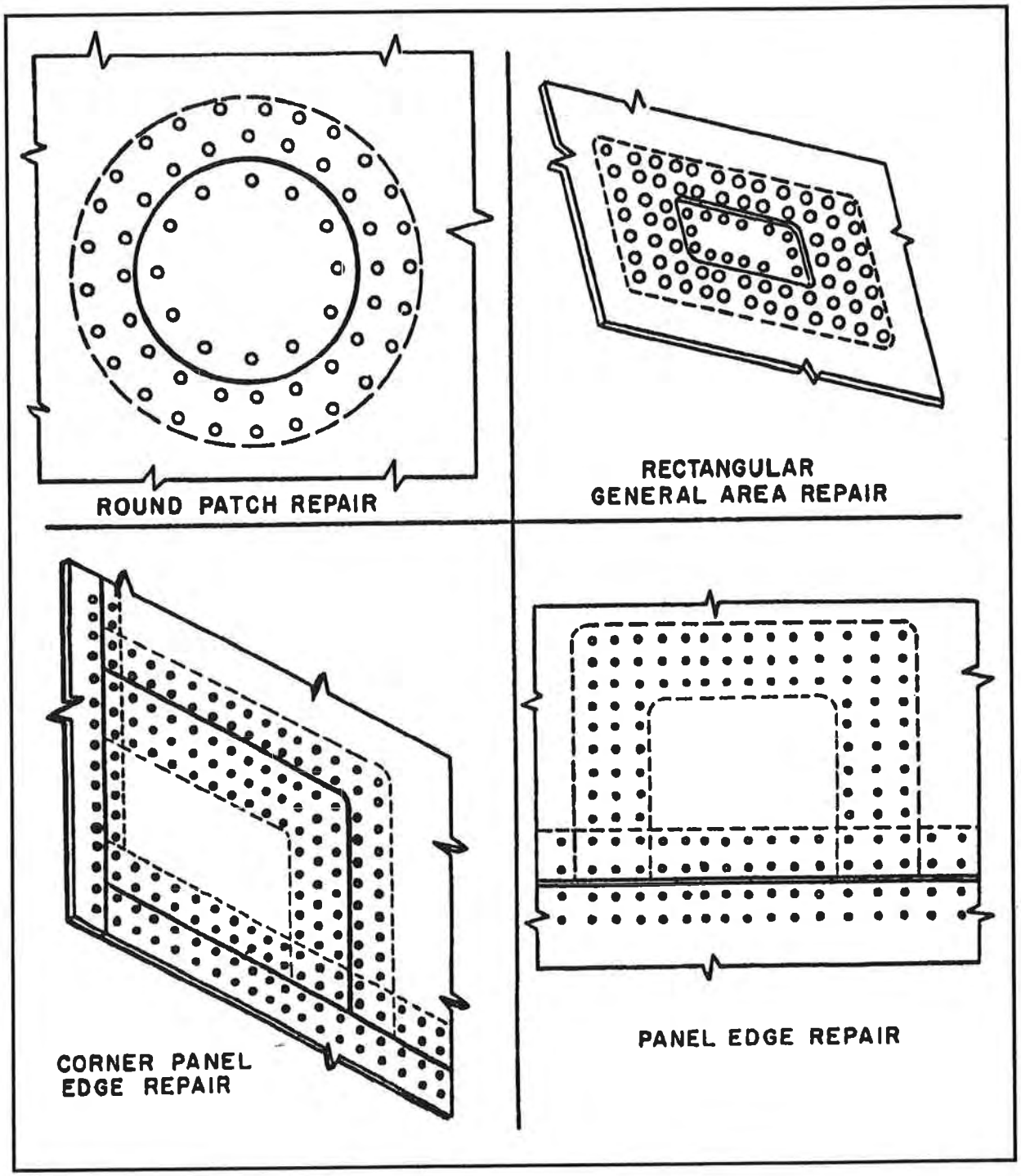

Figure 8-3. Typical flush skin repairs

Downloaded from http://www.everyspec.com

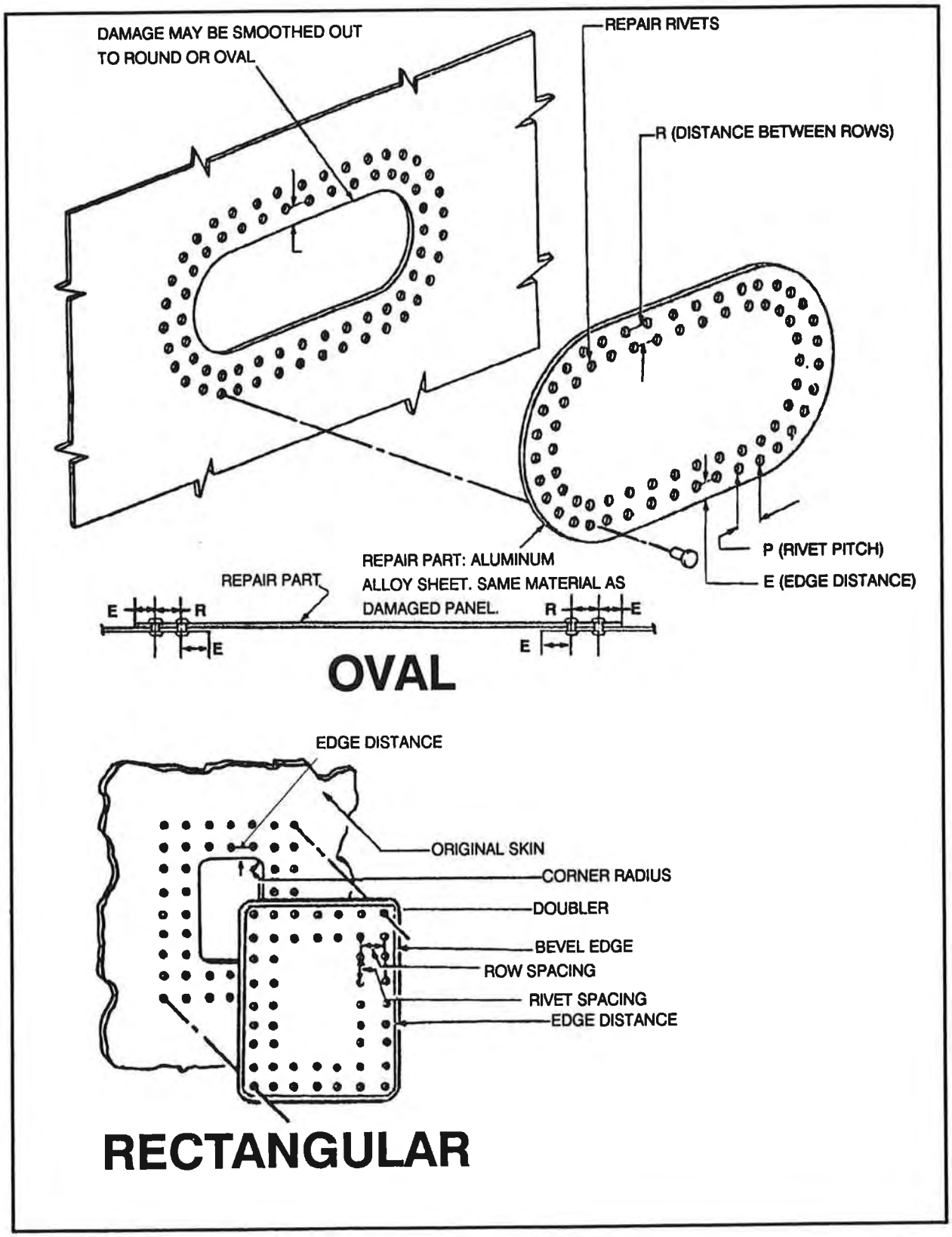

Figure 8-4. Typical nonflush skin repairs

Downloaded from http://www.everyspec.com

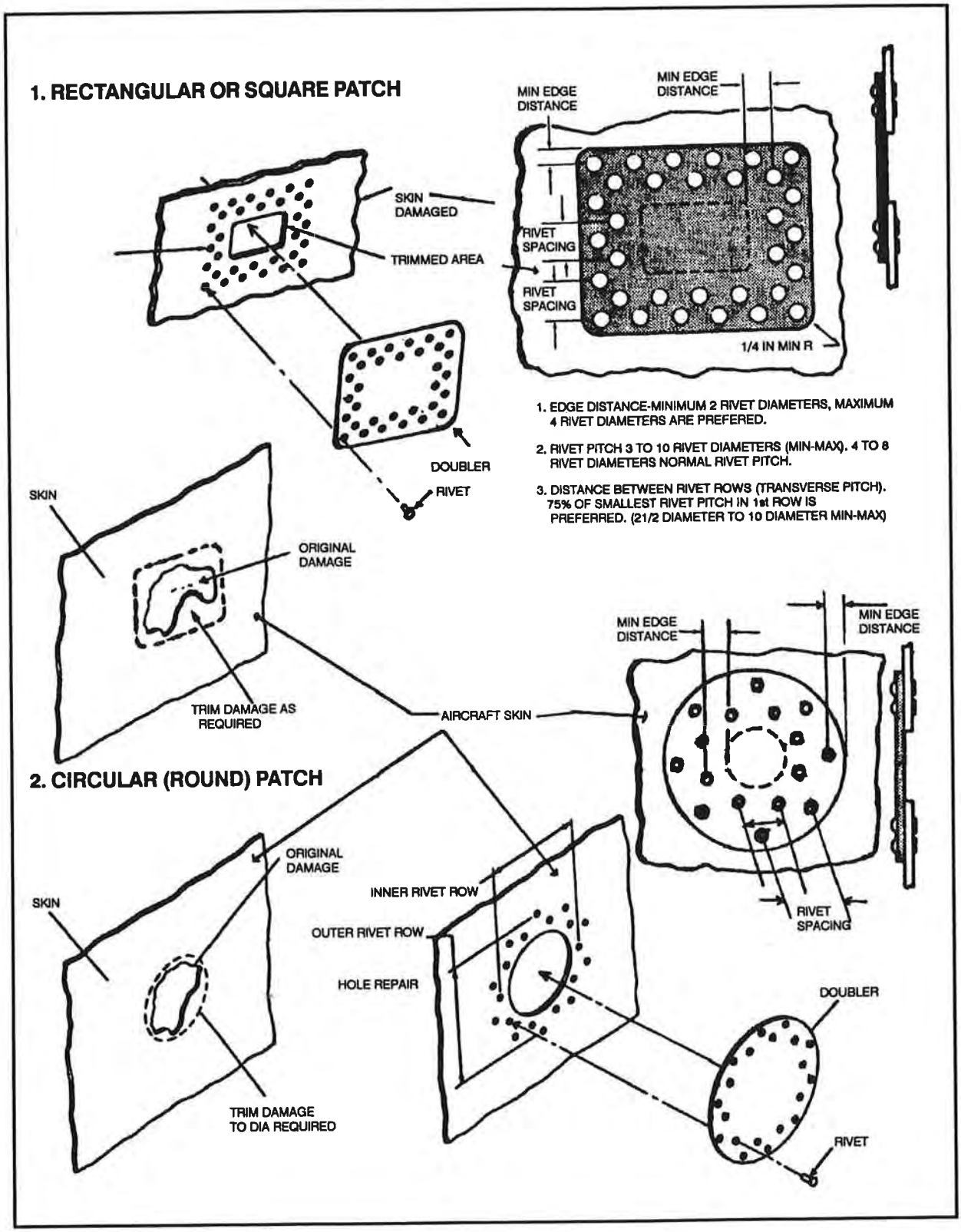

Figure 8-4A. Nonflush skin repairs (overlay or scab patches)

Downloaded from http://www.everyspec.com

Internal

Both flush and nonflush repairs can be used as reinforcement plates where damage has occurred. In contrast flush-type patches are used where the function or functions of other parts near the part being repaired require the repair be flush. A large majority of repairs on the interior of an aircraft involve some type of patching by insertion. It is beyond the scope of this manual to cover every possible type of internal repair.

There will be times when both an external and internal member of the aircraft, such as skin and stringer, will be damaged in the same area. You must use two types of patches for such a repair, commonly called a combination repair.

PRIMARY (STRESSED) SKIN REPAIR

Skin patches are divided into two general types: the lap or scab patch and the flush patch:

- A lap or scab patch (Figure 8-4A) is an external patch in which the edges of the patch and the skin overlap. The overlapping portion of the patch is riveted to the skin. Use lap patches in most areas where aerodynamic smoothness is not important.
- A flush patch is a filler patch that is flush with the skin when applied. It is supported and riveted to a reinforcement plate which, in turn, is riveted to the inside of the skin. This reinforcement plate is usually referred to on repair diagrams as the doubler or backup plate (Figure 8-5).

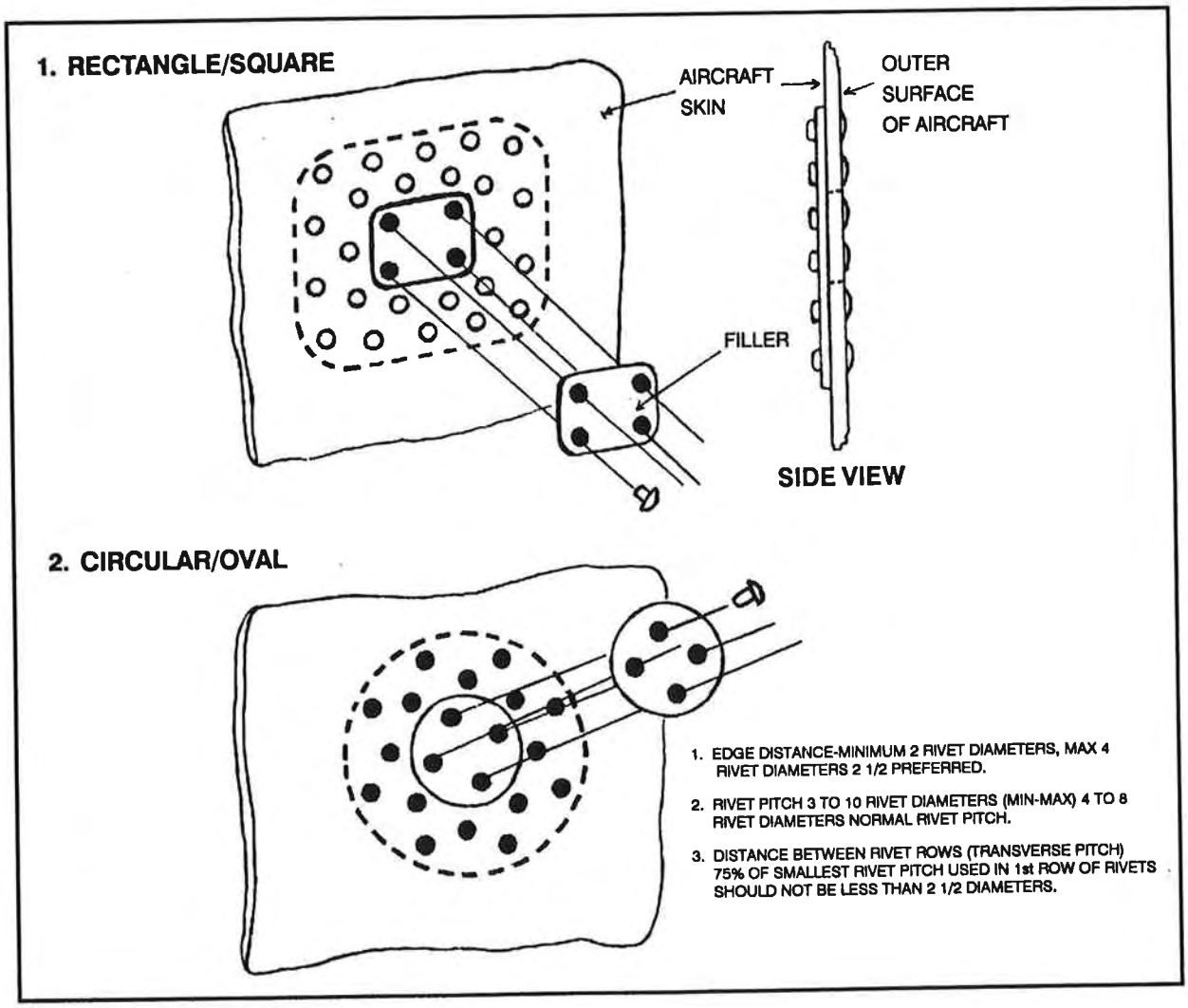

Figure 8-5. Primary structure skin patch - flush

Downloaded from http://www.everyspec.com

To restore the strength to the damaged skin of the primary structure, follow procedures listed in the aircraft technical repair manual. If there are no guidelines or procedures given, use the following:

- The same type, temper, and thickness of material used by the manufacturer; or increase the thickness by one gage. If a substitute material must be used, refer back to the material substitution chart (Figure 8-1) or TM 55-1500-204-25/1.
- The same type and diameter rivets used by the manufacturer.
- Enough rivets to restore strength to the damaged area. As a minimum, two rows of rivets are needed for any structural skin surface, using 4 to 8 rivet diameters for rivet pitch.

LAYOUT PROCEDURES – SKIN REPAIR

Rivet Pattern

A good rivet layout ensures that each rivet carries its share of the required load. Improperly spaced rivets can cause failure of the repair or structure due to excessive loading on a few rivets. A rivet pattern layout includes –

- Size of rivets.
- Number of rivets required.
- Distance of rivets to the edge of the metal (edge distance).
- Spacing of rivets (rivet pitch and transverse pitch).
- Center-punching rivet hole locations.

Edge Distance

The edge distance is the distance from the center of a rivet to the nearest edge of the metal. Correct edge distance must be maintained if the riveted joint is to develop the required strength. Figure 8-6 illustrates edge distance. Edge distance is often abbreviated ED.

Maintain edge distance on both the top and bottom sheets. Edge distance should not be less than two or more than four times the diameter of the shank of the rivet. The ideal edge distance is 2½ times the rivet shank diameter for a universal-head rivet, 3 times the rivet shank diameter for a flush-head rivet that is machine (cut) countersunk, and 2½ times the rivet shank diameter for dimpled rivets.

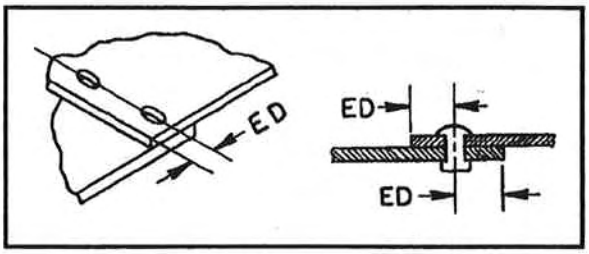

Figure 8-6. Edge distance

Rivets placed less than minimum edge distance could cause cracking between the rivet hole and the edge of the metal, which could result in failure of the parts being riveted. Rivets placed more than four diameters apart (the maximum distance) could cause the edge of the metal to turn up (especially with thin metals). Dirt and moisture collect under the edges and cause corrosion. Figure 8-7 illustrates the results of proper and improper edge distance.

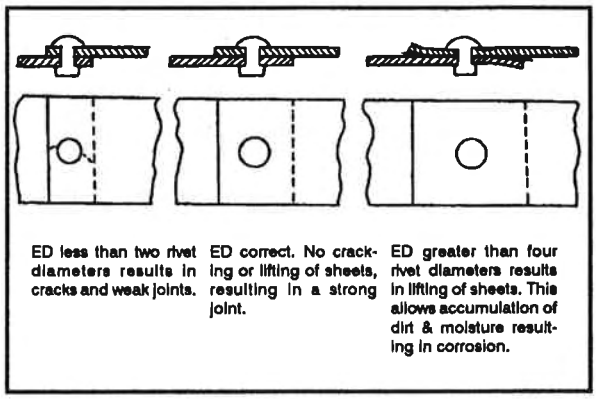

Figure 8-7. Proper and improper edge distance

Rivet Pitch

Rivet pitch is the distance between the centers of two rivets in the same row (Figure 8-8). This spacing is measured from the center of one rivet to the center of another. At no time should this spacing be greater than or less than certain set limits. The minimum distance between two rivets is 3 times the rivet shank diameter; the maximum distance is 10 times the rivet shank diameter. The ideal pitch is between 4 and 8 times the rivet shank diameter. This spacing is

Downloaded from http://www.everyspec.com

preferred because it ensures that each rivet carries its share of the load. When working on aircraft and laying out rivets for a repair, use this ideal pitch whenever possible. For a primary (stressed) skin repair use 4 to 6 rivet diameters; for a low or non-stressed area use 6 to 8 rivet diameters.

Transverse Pitch

Tranverse pitch is the distance between parallel rows of rivets. Figure 8-8 shows the transverse pitch between two rows of rivets. Transverse pitch is usually 75 percent of rivet pitch and is 2½ rivet diameters to 100 percent rivet pitch (4 to 6 rivet diameters is the preferred transverse pitch for most repair work).

CAUTION

Do not exceed 100 percent of rivet pitch.

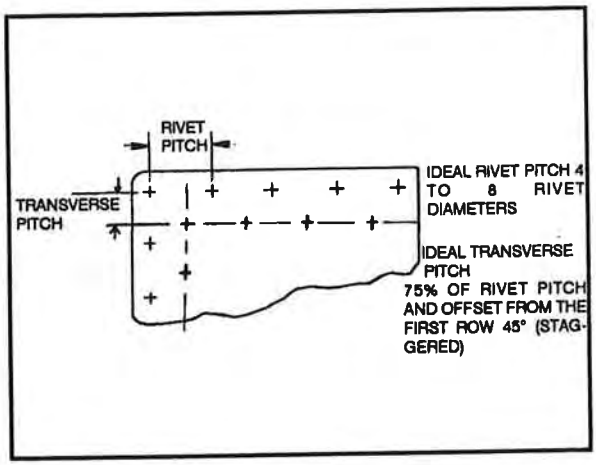

Figure 8-8. Rivet pitch and transverse pitch

Rivet Size

Edge distance, rivet pitch, and transverse pitch all depend on rivet shank diameter. Before determining rivet pitch, you must first determine rivet shank diameter. Sometimes you will use the same size diameter as the existing fastener. Sometimes the technical manual will specify the fastener diameter; other times you will be required to determine it. Select a rivet with a shank diameter that corresponds to the combined thickness of the component parts to be joined. If you use too large a rivet in thin material, there may be undesirable bulging around the rivet head. This is caused by the excessive force required to drive the rivet. If you use too small a rivet, the sheer strength of the seam will not be enough to carry the load imposed on the joint. The diameter of the rivet should not be less than the combined thickness of the parts to be joined; it should equal or exceed three times the original skin thickness. (Rivet diameter must never be less than three times the original skin thickness.)

Skin Repair Layout

Following are examples of laying out different-shaped skin repairs. The major difference between a circular repair and a square repair is in the layout procedure. Follow the steps below to make a rivet layout for a square or rectangular-shaped skin repair:

- Draw a straight line below the damaged area. This line is called the baseline (Figure 8-9).

NOTE: These procedures are typical for certain skin repairs but are not the only acceptable methods of layout. Rivets can be aligned with each other rather than staggered, for instance; or different rivet pitches may be used in the same row of rivets, depending on the specific repair.

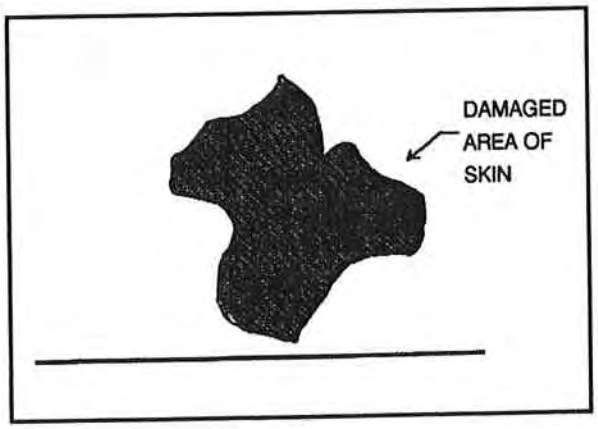

Figure 8-9. Baseline

- Erect cutout lines on each side of the damage by placing two lines perpendicular (at 90° angles) to the baseline. Allow space to radius the corners (Figure 8-10).

Downloaded from http://www.everyspec.com

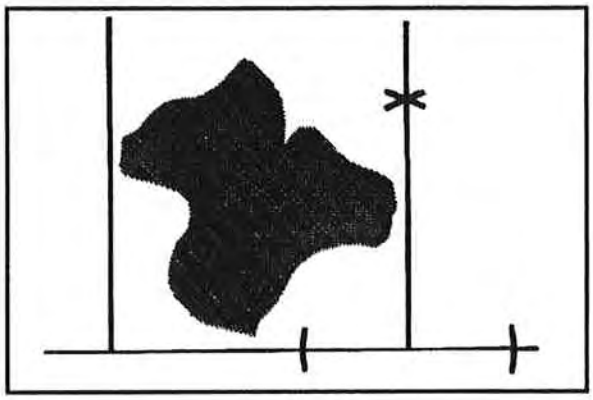

Figure 8-10. Cutlines

- Place a mark on each vertical line at equal distances from the baseline, and draw the top cutline between these two marks (Figure 8-11). Now you should have a square layout around the damage, all corrners being 90° angles (Figure 8-12). The next step is to radius all corners.

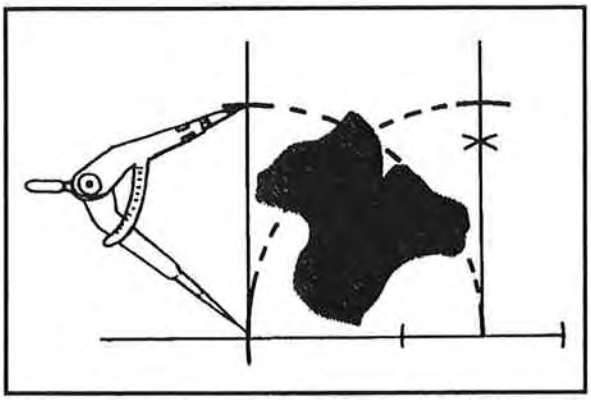

Figure 8-11. Erecting top cutline

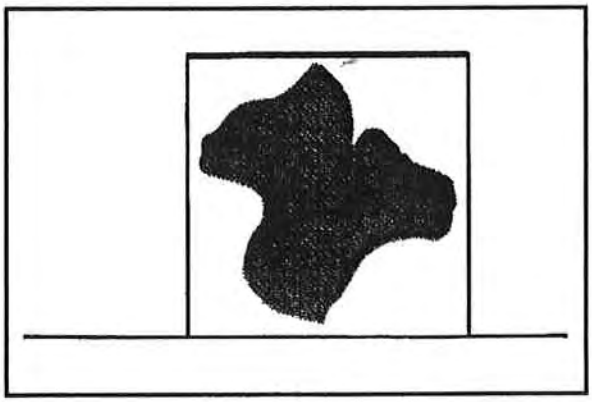

Figure 8-12. Square layout

- To radius the corners using a ½-inch radius, set the compass at ½ inch and establish points A and B ½ inch from the corners. Next swing an arc ½ inch from point A and cross it with an arc ½ inch from point B (Figure 8-13).

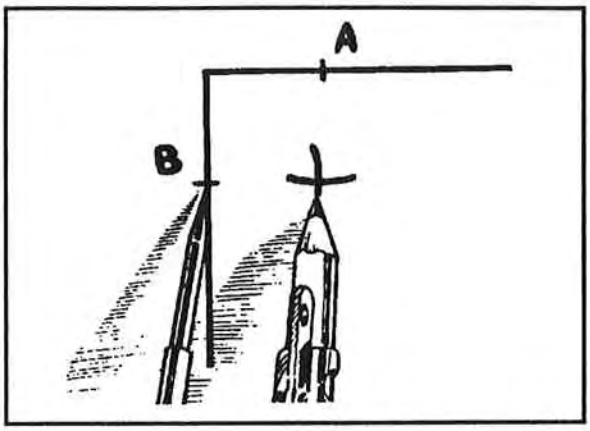

Figure 8-13. Establishing point to swing radius

- Locate the compass leg at the intersection of the arcs and swing an arc from point A to point B. This establishes a ½-inch corner radius (Figure 8-14).

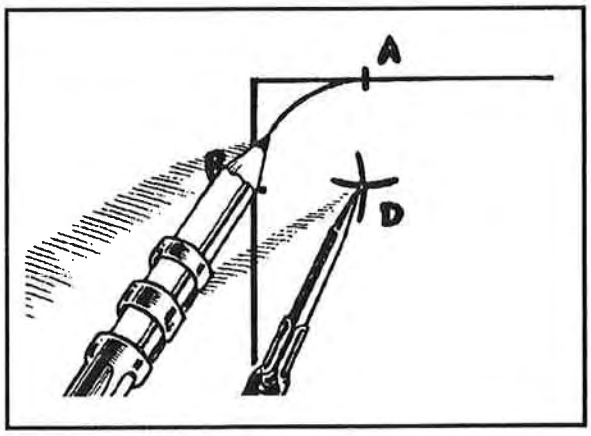

Figure 8-14. Corner radius

- To remove the damage, use a rotary file with a high-speed grinding motor or sawing or some other suitable method. You can cut away the damaged area with aviation snips for skin thicknesses of .040 and less, or use the chain-drilling method.

Downloaded from http://www.everyspec.com

- Determine the rivet head style and diameter. Then determine the edge distance and erect lines showing the location of the first row of rivets (Figure 8-15).
- Radius the corners of the rivet layout lines by swinging arcs from the same points that the cutline radii were swung from (Figure 8-16).

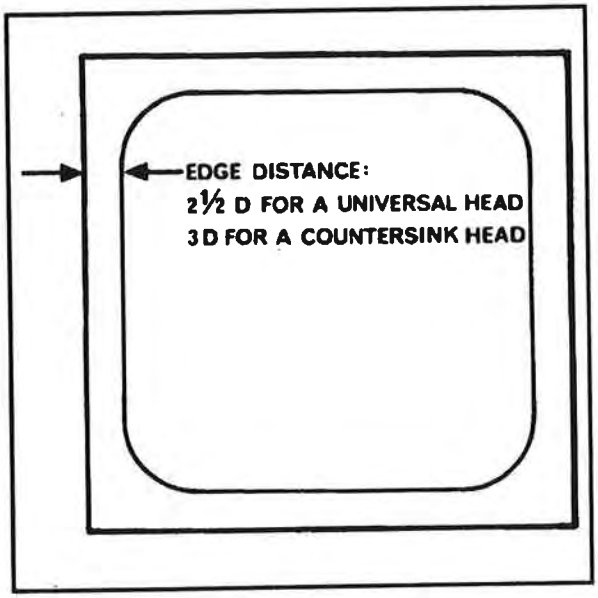

Figure 8-15. Edge distance

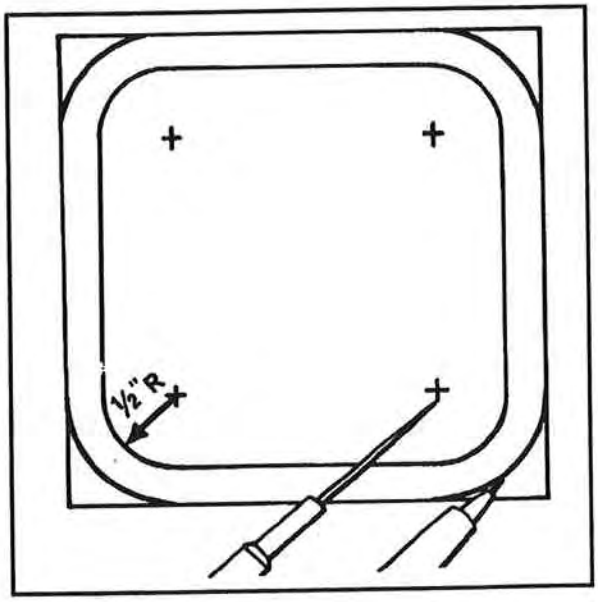

Figure 8-16. Rivet layout line radius

- Establish the known rivets by drawing a line through each corner as shown in Figure 8-17. The Xs represent the known rivet points.
- Walk off rivet pitch between the known rivet points with compass dividers.

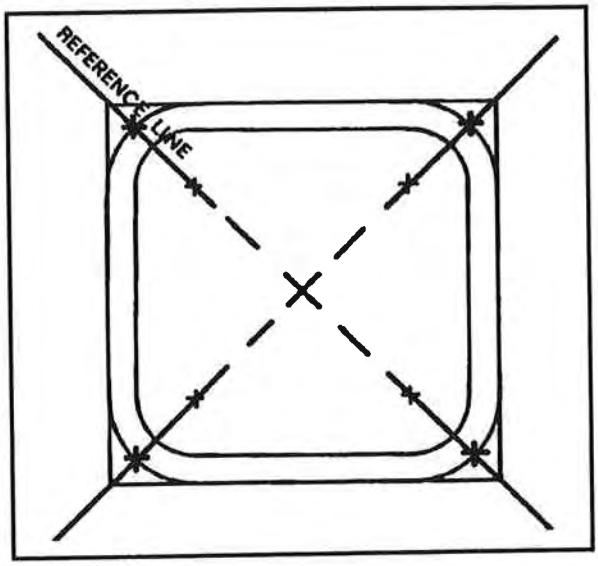

Figure 8-17. Establishing known rivets points

Once again, rivet diameter must be known so a rivet pitch can be established (Figure 8-18). Normally the rivet pitch will range from 4 rivet diameters to 8 rivet diameters depending on what is specified by the aircraft technical manual.

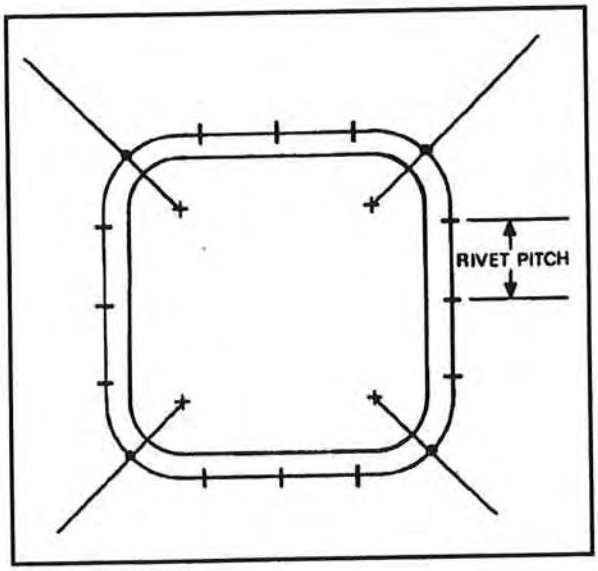

Figure 8-18. Rivet pitch between known points

Downloaded from http://www.everyspec.com

- If two rows are needed, determine transverse pitch by taking 75 to 100 percent of rivet pitch (Figure 8-19).

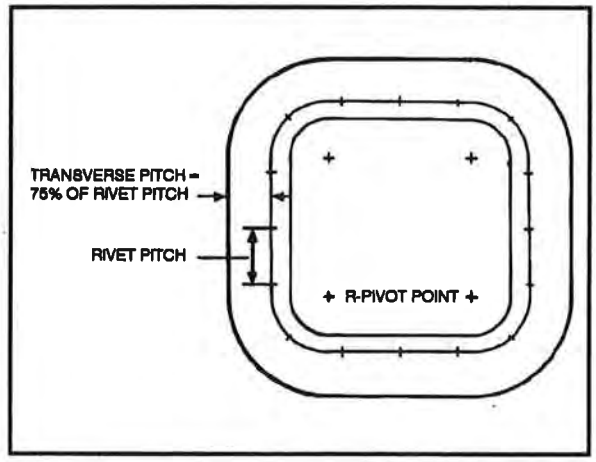

Figure 8-19. Transverse pitch

- Establish rivet pitch on the second row. Extend the reference lines across the second row to establish known rivet locations. Then bisect the rivets located on the straight lines in the first row (Figure 8-20).

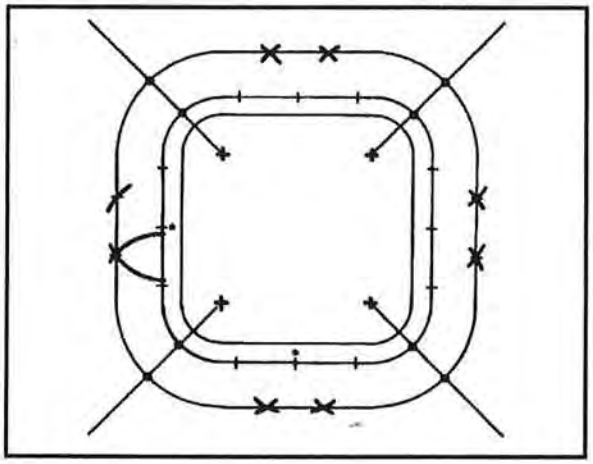

Figure 8-20. Bisecting rivets

- Locate a rivet halfway between the known rivet and the rivet on the straight line in the second row. Notice that the rivet located between the arcs is midway between the two nearest rivets in the outside row (Figure 8-21). Use existing rivets as reference points for bisecting rivets on to the transverse line in the flat.

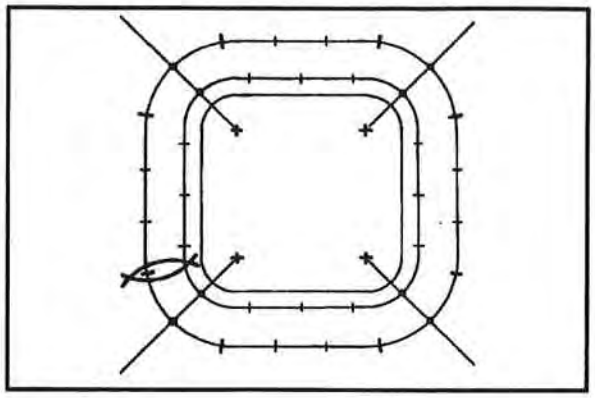

Figure 8-21. Locating rivet on a radius

- After rivet layout is complete, place the doubler material behind the skin; drill and deburr rivet holes (Figure 8-22).
- Trim doubler edge distance from outer row of rivets.
- Place the filler material behind the skin and erect a cutline on the filler (Figure 8-23).

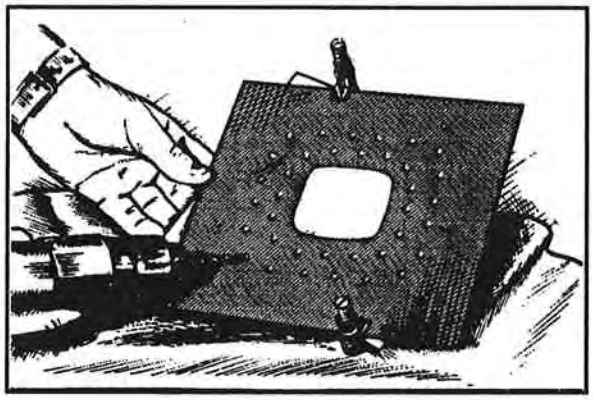

Figure 8-22. Drill layout and doubler

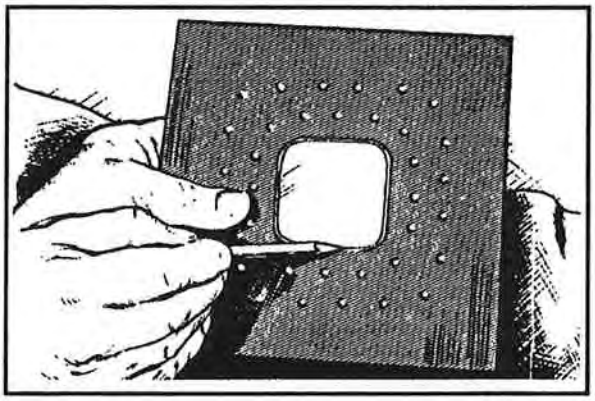

Figure 8-23. Erecting cutline on filler

Downloaded from http://www.everyspec.com

- Cut the filler and fit it into the damaged cutout with 1/32 ± 1/64-inch clearance (Figure 8-24). This is a general rule of thumb for filler gaps; some aircraft repairs require up to 1/16-inch gap.

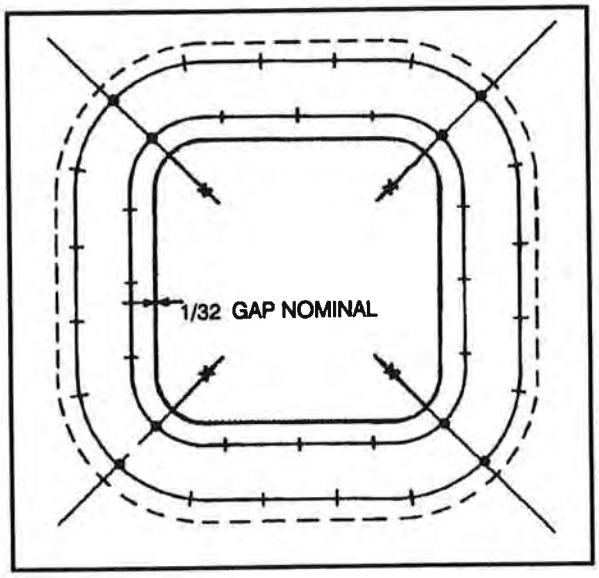

Figure 8-24. Filler cut to 1/64-inch clearance

- Make the rivet layout for the filler by establishing a known rivet point in each corner and using a rivet pitch between 3 and 10 rivet diameters. Edge distance for countersunk-head rivets is 3 diameters (Figure 8-25). Drill rivet holes prior to final fitting of the filler. This prevents the filler from slipping, which might be the case if the filler is filed to exact size and then drilled. Also, take the gap into account when calculating the edge distance for the filler.
- Drill and deburr all rivet locations on filler.
- Apply primer to all surfaces.
- Rivet doubler in place.
- Rivet filler in place.

Circular Repair Layout

To lay out a circular repair, follow this procedure:

- Draw a line through the center of the damaged area, extending the line approximately 1 inch of each side of the damage. This will be the layout centerline.

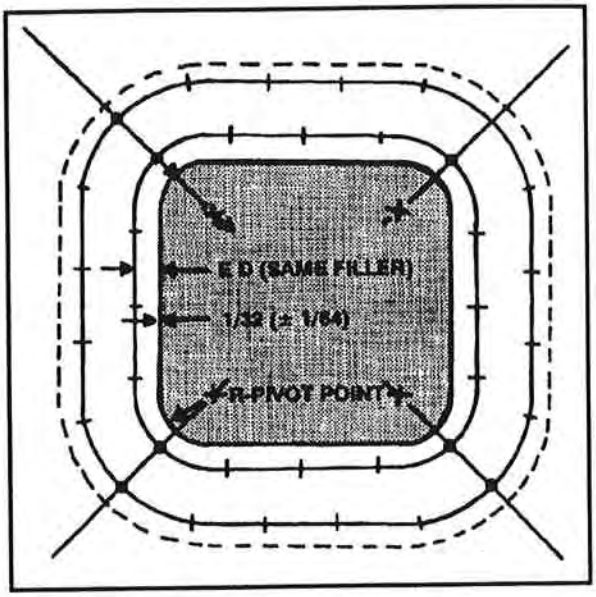

Figure 8-25. Establishing rivets on filler

- Draw a circle around the damaged area, using a pencil, compass, or dividers. This will be the damage removal or cutline (Figure 8-26). Be sure to place the compass point as close to the center of the damage as possible.
- Remove the damage to the cutline using chain drilling, filing, snips, rotary files, or some other suitable method.
- Re-establish the centerline in the cutout area by taping a piece of cardboard or metal behind the cutout area. Relocate the center of the cutout.

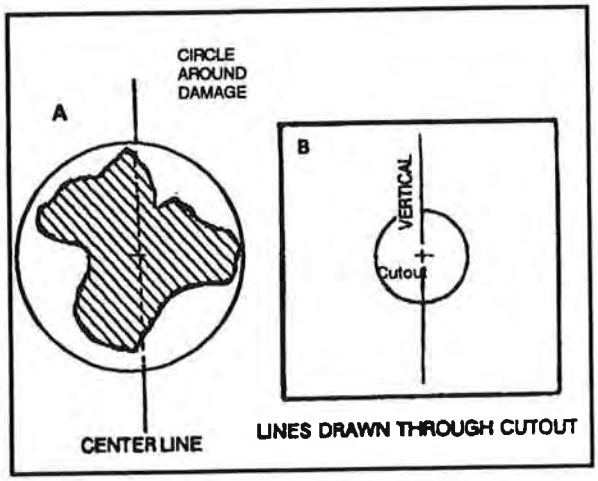

Figure 8-26. Circular repair layout

Downloaded from http://www.everyspec.com

- Locate the layout line for the first row of rivets by drawing a circle around the cutout area. Be sure to use from 2 to 4 diameters for edge distance. Check to make sure it is even all around the cutout area (Figure 8-27).

NOTE: It is sometimes easier on large diameter repairs to use vertical and horizontal lines and "walk" off the rivet locations on a quarter of the circle.

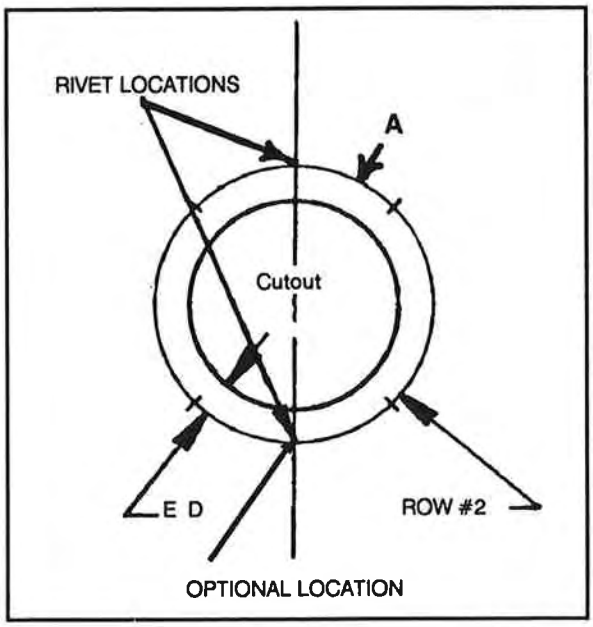

Figure 8-27. Edge distance around cutout

- Set dividers at the smallest rivet pitch needed for the repair (normally 4 to 6 diameters). Using the start point, walk off the first row of rivets along the first row line. The rivets can be walked from the start point all the way around the first row line or halfway around the cutout. Generally, on small diameter cutouts it is easy to walk completely around the cutout. Adjust the rivet pitch as needed so it is even all around the cutout. Try to keep the rivet pitch as close to the smallest desired rivet pitch as possible.
- Using the rivet pitch above, calculate the distance from the first row of rivets for placement of the second row of rivets (transverse pitch).
- Starting again from the center of the damage cutout, draw another circle around the damage cutout for the second row of rivets (Figure 8-28).
- To layout the rivets on the second row, use a pencil compass to bisect the rivets in the first row. Make the arcs touch the second row line (Figure 8-28).

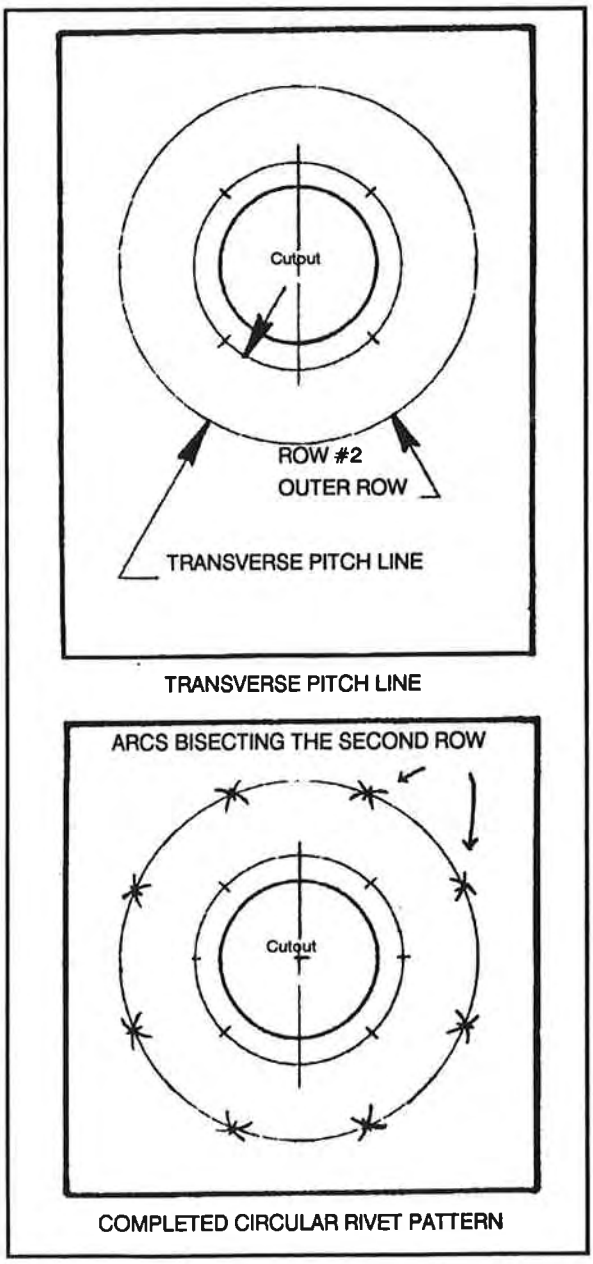

Figure 8-28. Transverse pitch line and completed circular rivet pattern

Downloaded from http://www.everyspec.com

- Check the rivet pitch in the second row. It must not exceed 10 rivet diameters. If it exceeds 10 diameters or if it is larger than the rivet pitch desired for the layout, either shorten the distance between the rivet rows (minimum transverse pitch 2½-rivet diameters) or add more rivets to the first row to reduce the rivet pitch and transverse pitch.
- Center punch all the rivet locations. Secure the patch material behind the skin cutout, and drill all rivet holes through the skin and patch material. Use enough Cleco fasteners to firmly hold the patch material to the skin while drilling.
- Remove the patch material from the skin; deburr all rivet holes on patch and skin. Draw a cutline edge distance out from the second row or rivets on the patch. This can be done by setting the compass point in the center of the patch and swinging a circle around the outside rivet row (Figure 8-29).

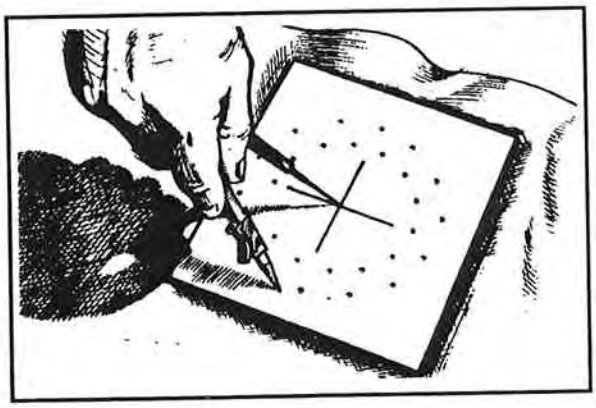

Figure 8-29. Locating a cutline

- Trim off the excess material by cutting along the outline cutline. File any rough edges and burrs.
- Bevel the outer edge of the patch 45° if it is an overlay (scab) patch, and turn down the edge 5°-10° (Figure 8-30).
- Prime all bare metal surfaces and apply sealant to mating surfaces as required (Figure 8-31).
- Rivet the patch to the outside of the aircraft skin. Use enough Clecos to hold it firmly to the aircraft while riveting (Figure 8-32).

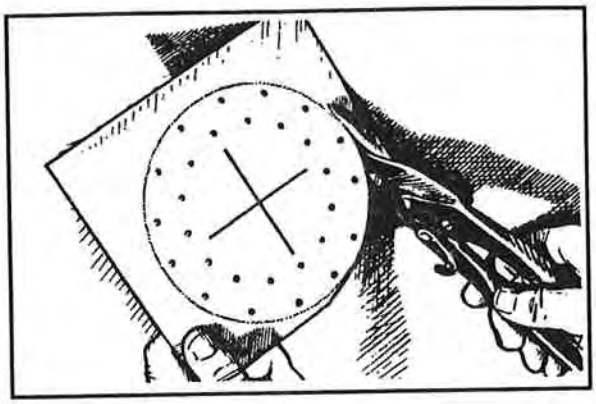

Figure 8-30. Trimming a patch using aviation shears

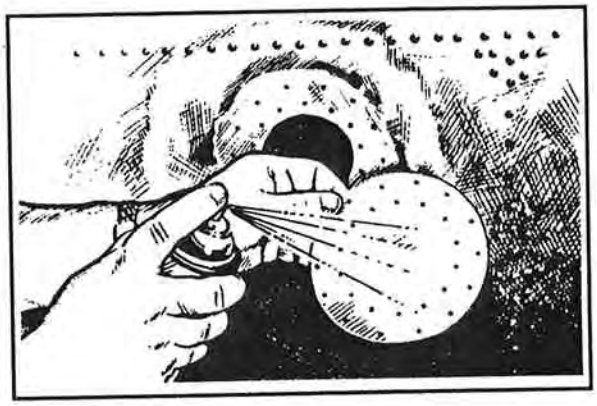

Figure 8-31. Treating for corrosion

- If a flush surface is required, follow the steps above. Then layout a filler or the damage cutout using material of the same type and thickness as the original. Maintain a gap of 1/32 ± 1/64-inch between the cutout and the filler. (Rivet pitch for the filler may be 10 diameters.) Drill the rivet holes in the filler and patch while the patch is attached with Clecos to the aircraft skin. Deburr all rivet holes and follow the last two steps above.

Patching Procedures

Use the following patching procedures when making a repair on the airframe.

Where permitted, you can use a lap or scab patch to repair cracks as well as small holes. When repairing cracks, drill a small hole (with a number 40 drill) in each end of the crack before applying the patch. These holes prevent the crack from spreading. The patch must be large enough to install the required

Downloaded from http://www.everyspec.com

number of rivets. The recommended patch may be cut in a circle, square, or rectangle. The edges must be chamfered to an angle of 45° for half the thickness of the material and bent down 5° over the edge distance to seal the edges (Figure 8-33). This reduces the chances that airflow will affect the repair.

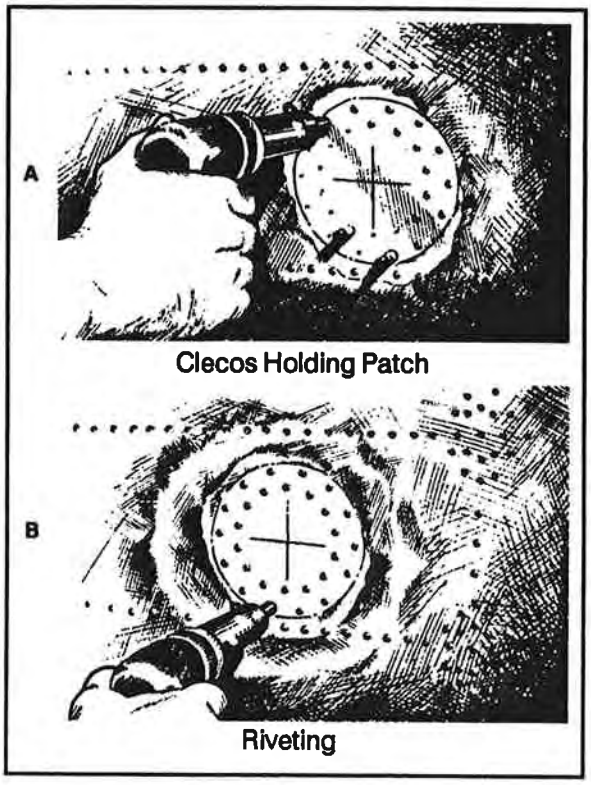

Figure 8-32. Rivet installation

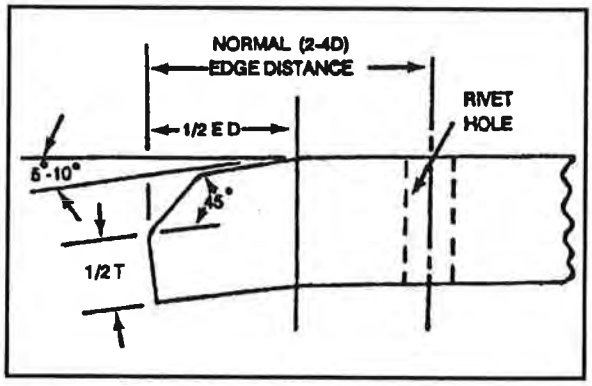

Figure 8-33. Chamfering and bending edge of patch

A flush patch is fairly simple to use for repairs in areas that are clear of the external structure. When access is needed for riveting, cut a hole in the center of the doubler. In inaccessible areas, the flush patch can be made by substituting blind installation rivets for standard rivets, where permitted, and inserting a doubler that has been split through the opening. Figure 8-34 shows an accepted method of inserting a doubler that has been split through the opening.

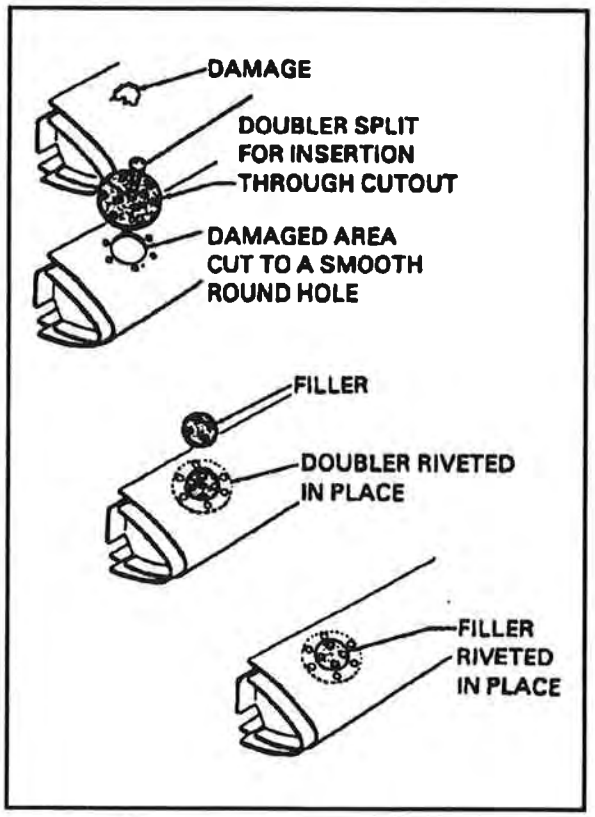

Figure 8-34. Repair of small holes in skin with flush patch

To insert the doubler, slip one edge under the skin; then rotate doubler until it slides in place under the skin. The screw in the center hole is installed temporarily to serve as a handle for inserting the doubler. This type of patch is recommended for holes up to 1½ inches in diameter. It is usually more practical to trim holes larger than 1½ inches to a rectangular or square shape, rounding all corners to a radius of ¼ to ½ inch. In all flush patches (Figure 8-35), the filler must be of the same gage and material as the original skin. The doubler should be of material one gage heavier than the skin.

Downloaded from http://www.everyspec.com

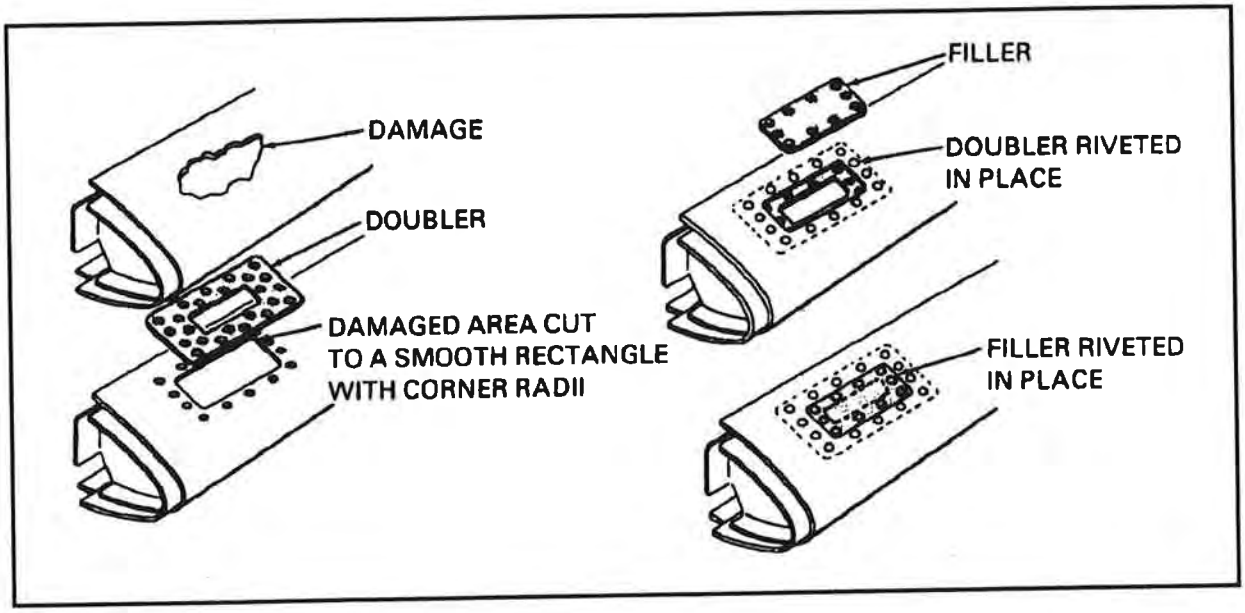

Figure 8-35. Rectangular flush patch

Use flush patches to repair skin damage over the internal structure of an aircraft. Figure 8-36 shows a suggested method of using a flush patch. For other repair methods refer to the applicable aircraft maintenance manual or TM 55-1500-204-25/1.

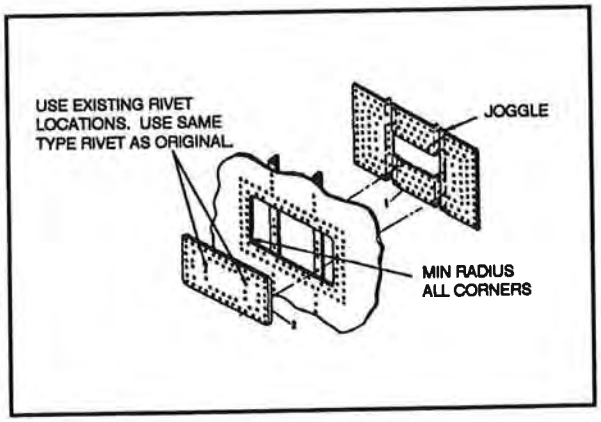

Figure 8-36. Flush repairs over internal structures using joggles

Installing a flush access door sometimes makes it easier to repair internal structure and damage to the skin in certain areas, if this is permitted by applicable aircraft manuals. This installation consists of a doubler and a stressed cover plate. A single row of nut plates is riveted to the doubler; then the doubler is riveted to the skin with two staggered rows of rivets (Figure 8-37). The cover plate is attached to the doubler with machine screws. When an access door is allowed and installed over the internal structure, install a row of screws through the cover plate into the internal structural member.

Skin Replacement and Repair

Damage to the metal skin that exceeds repairable limits requires replacement of the entire panel. A panel must also be replaced when there are too many previous repairs in a given section or area.

As with all other types of repair, the first step is to inspect the area thoroughly to determine the extent of damage. Inspect the airframe for transmittal damage. Structural members must be replaced or repaired when bent, fractured, or wrinkled. Inspect all rivets in the damaged area for signs of failure. They may be sheared considerably without visible external evidence of the shearing. Therefore, remove rivets at points in the damaged area and examine them for signs of shear failure.

During inspection note all unusual riveting problems that make riveting difficult or replacement impossible. Any fixtures that might hinder riveting and prevent use of straight bucking bars will be apparent in a thorough inspection. In certain places, flanges or reinforcing members or the intersection of stringers, longerons, formers, frames, or rings will also make bucking rivets very difficult. This problem

Downloaded from http://www.everyspec.com

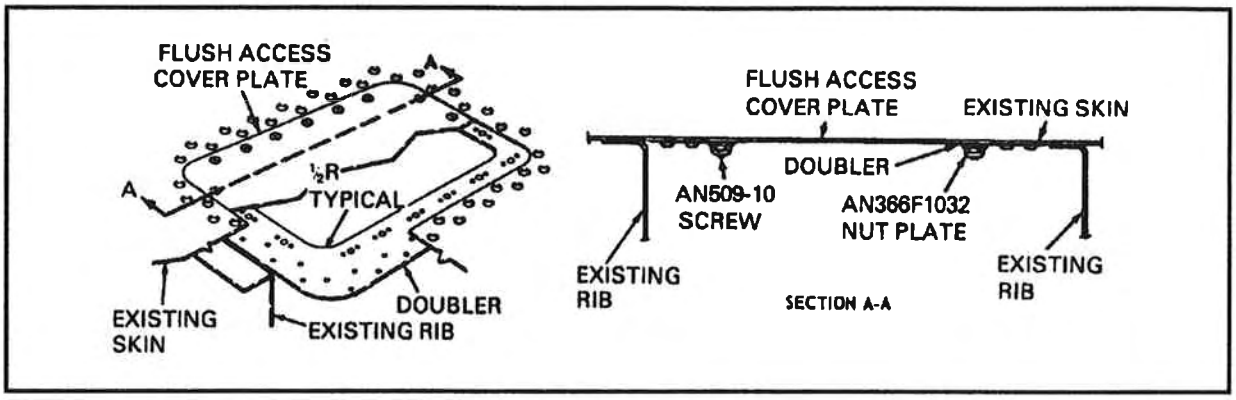

Figure 8-37. Flush access door

can be solved by using bucking bars suitable for these situations.

Be careful not to mutilate damaged skin when removing it because in most cases it can be used as a template for laying out and drilling holes in the new piece of skin. Rivet holes in stringers, longerons, bulkheads, formers, frames, rings, and other internal members must be kept in the best possible condition. If any of these members are loosened by rivet removal, mark their locations so that they can be reinstalled in their original positions. Refer to the applicable skin panel diagram in the specific aircraft manual for the gage and alloy of material to use in the replacement panel. Determine the size and shape of the panel in either of two ways: measure the dimension during the inspection, or use the old skin as a template to lay out the sheet and locate the holes. The latter method is preferable because it is more accurate. In both procedures the new sheet must be large enough to replace the damaged area. It may be cut with an overlap of 1 to 2 inches of material outside the rivet holes.

If the old sheet is not too badly damaged, flatten it out and use it as a template. The new sheet, which should be cut about 1 inch larger than the old, should be drilled near the center using the holes in the old sheet as a guide. Then fasten the two sheets together with Clecos. The use of sheet metal screws is discouraged because they mar the rivet hole edges. Drilling should proceed from the center to the outside of the sheet with Clecos being inserted at frequent intervals.

If the old sheet cannot be used as a template, drill the holes in the new one from the inside of the structure, using the holes in the reinforcing members as guides. Drill and install Clecos in the same manner described above. This is called back drilling. Before placing the new sheet on the framework to drill the holes, align the reinforcing members flush at the points where they intersect. Otherwise, the holes in the new sheet will not be accurately aligned. For the same reasons, the new sheet should have the same contour as the old one before the rivet holes are drilled.

Exercise extreme care when duplicating holes from reinforcing members to skin; otherwise, both frame and skin may be ruined. Because most bulkheads, ribs, and stringers depend on the skin for some of their rigidity, they can easily be forced out of alignment during the drilling process. Hold the skin firmly against the framework, or pressure from drilling may force it away from the frame and force the holes out of alignment. This may be prevented by placing a block of wood against the skin and holding it firmly during drilling. Hold the drill at a 90° angle to the skin at all times to prevent holes from becoming elongated and misaligned. When drilling through anchor nuts, use a smaller pilot drill first. Take care to avoid damaging the nut plate threads. The pilot holes are then enlarged to the proper size.

An angle attachment or snake drill may be required in places where a straight drill cannot be inserted. If neither type can be inserted, mark the new section carefully with a soft pencil through the holes in the old section. Another way to mark the location of the new holes is to use a transfer or prick punch (Figure 8-38). Center the punch in the old hole and

Downloaded from http://www.everyspec.com

then hammer it lightly on the outside of the sheet with a mallet. The result should be a mark that will locate the hole in the new sheet.

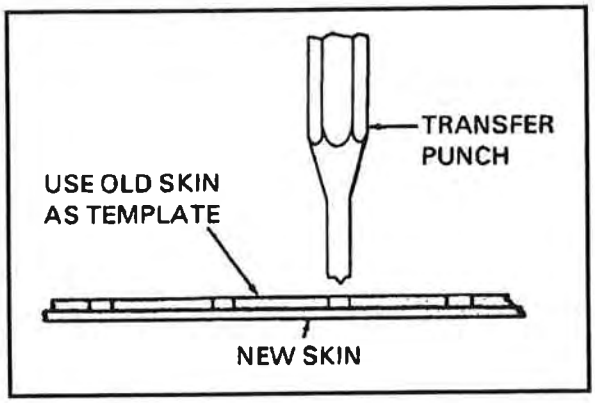

Figure 8-38. Transfer (prick) punch

Still another way to locate rivet holes without using a template is to use a hole finder (Figure 8-39). This device allows holes to be drilled in the new section of skin that are perfectly aligned with those in the old section. The hole finder has two sections, an upper part and a lower part, bolted together at one end. A guide rivet at the free end of the lower section drops into the old holes that are still in place in the sheet. The free end of the upper section of the hole finder has a hole in a position that exactly matches that of the guide rivet. The new hole is drilled through this opening. As the hole finder travels along, the guide rivet drops into an old hole and automatically determines the position of the new hole.

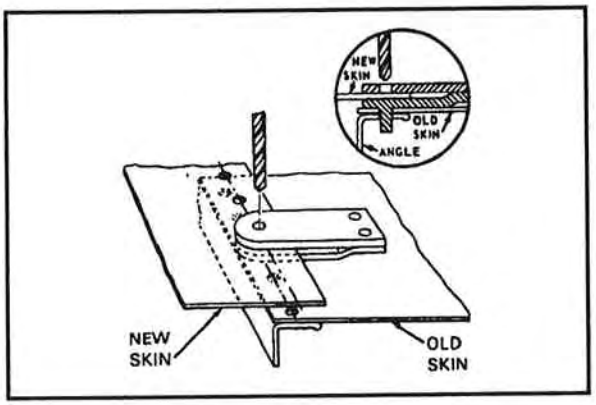

Figure 8-39. Hole finder

After all holes have been drilled, take out the temporary fasteners and remove the sheet from the framework. Remove all burrs left on both sides of the drilled holes by lightly turning a countersink in the hole. Remove all metal chips from between the pieces of metal. Use a rag or brush to prevent cutting your hand and wear goggles. If metal burrs and particles are not removed, the joint will not pull together and therefore will be weak.

Using the right type and weight of bucking bar is important. A bucking bar for 1/8-inch rivets should weigh at least 2 pounds, while bars for longer rivets should be proportionally heavier. A bar that is too light tends to develop a hardened, clinched head because it needs too many blows to upset the rivet.

Use a straight bar whenever possible so that its weight can be applied directly in line with the rivet shank. Where flanges on ribs or stringers do not permit the use of a straight bar, a bar such as those shown in Figure 8-40 (A and B) must be fabricated that will apply pressure in a straight line with the rivet. These bucking bars give much better results than one with a beveled end (C). Enough sheet metal fasteners must be used in attaching the skin to hold it firmly in place.

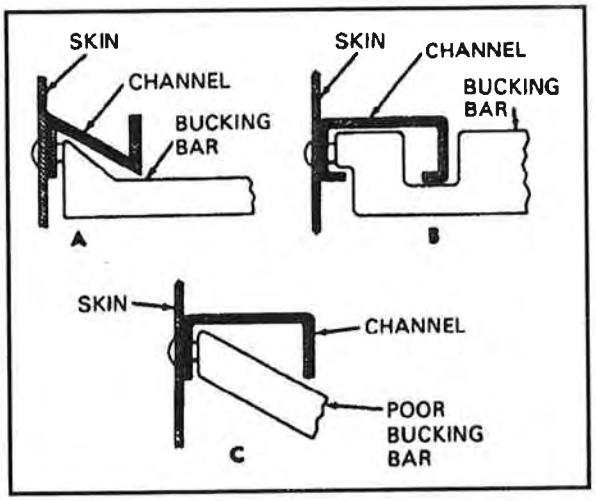

Figure 8-40. Correct and incorrect bucking bars

INTERNAL STRUCTURAL REPAIR

The internal structure of the semimonocoque fuselage consists of longitudinal members (longerons and stringers) and vertical members (bulkheads, rings, formers, and frames). The wing, stabilizer, and flight-control surfaces consist of spanwise members (spars and stringers) and chordwise members (bulkheads, ribs, and formers).

Downloaded from http://www.everyspec.com

Stringer Repair

A stringer is designed to stiffen the skin of the structure and help maintain its contour. Stringers also transfer stress from the skin to the bulkheads and ribs to which they are attached. Unlike longerons, stringers are not continuous throughout the structure. Also, they are not subject to as much load or stress as longerons. Stringers are made from wrought (sheet) metal and extruded metal. They are available in a variety of cross-sectional shapes; bulbed L-angles (extrusion) and J-stringers (wrought) are the most common configurations.

When repairing stringers always refer to the aircraft technical manual for a specific repair procedure. The following repair procedure is typical of most stringer repairs to formed (wrought) stringers:

- A reinforcement doubler (patch) of the same type, temper, and thickness, or one gage heavier metal is formed to as closely resemble the original stringer as possible. The doubler will fit the original stringer's outer contour as closely as possible so it "nests" with the original stringer.
- The doubler extends beyond each side of the damage cutout a minimum of four of the original flange rivets plus normal edge distance.
- A second row of rivets is placed in the web portion of the stringer in line with the flange rivets.
- Normally, this row is centered in the web.
- Rivets of the same type and diameter as the original rivets used in the stringer are used for the repair.
- A filler to match the cutout is placed between the skin and repair doubler with a gap of 1/64 to 1/32 inch between the filler and original stringer on each side of the filler. The filler should be the same type, temper, and thickness metal as the original stringer.
- If the stringer repair is made in conjunction with a skin repair, any damage cutout of the skin and stringer should be offset or staggered to better distribute stress that may be present.

See Figures 8-41 and 8-42 for examples of typical stringer repairs.

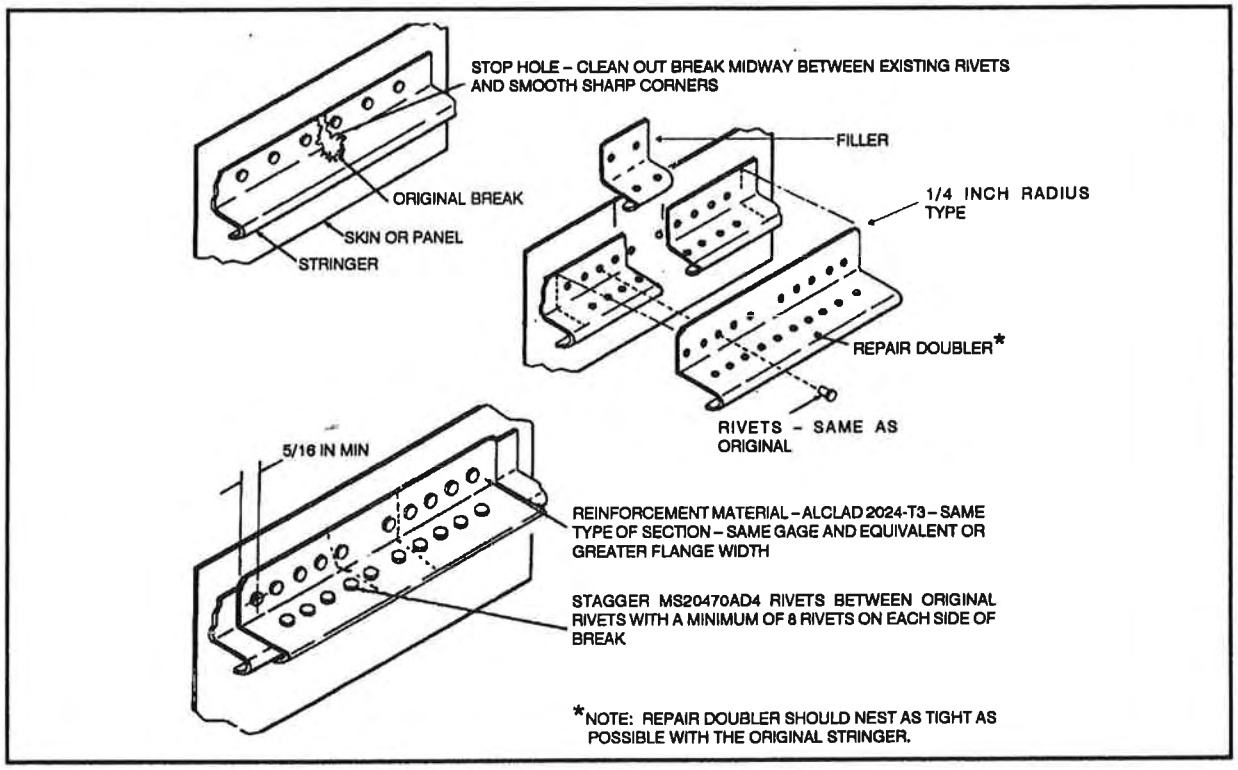

Figure 8-41. J-section stringer splice repair

Downloaded from http://www.everyspec.com

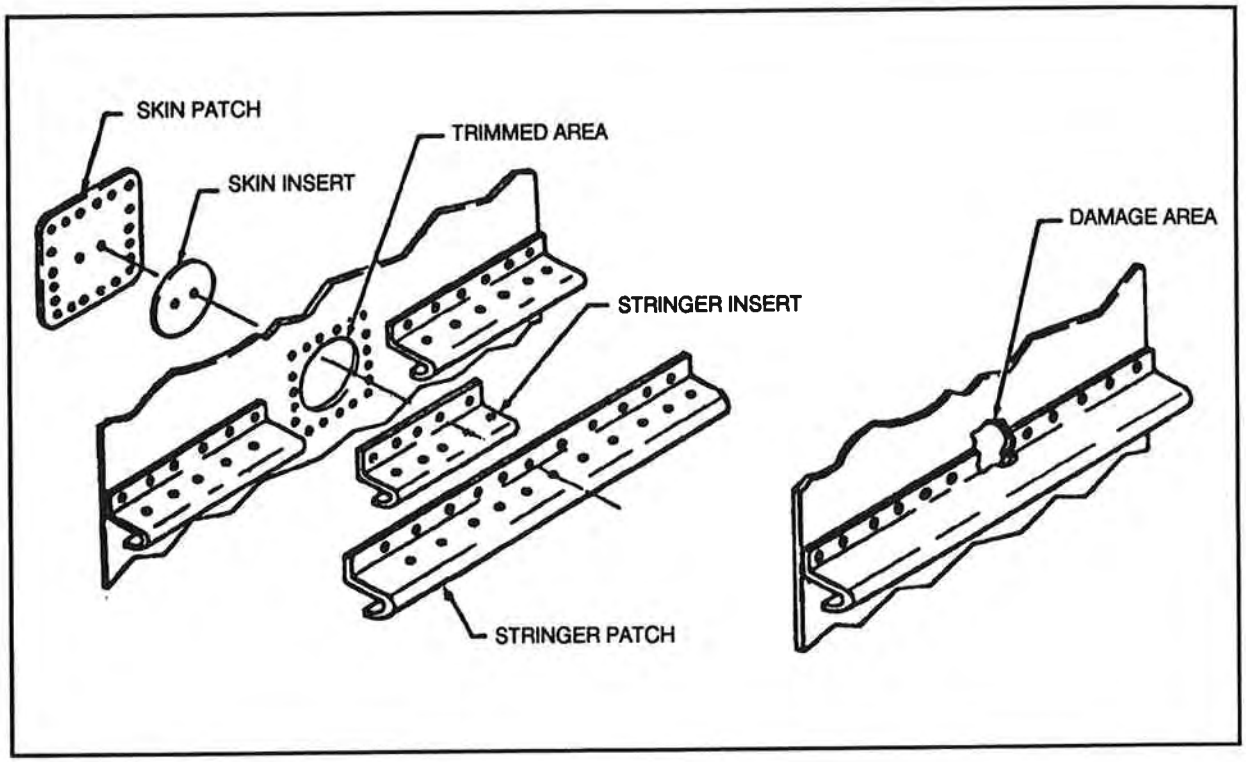

Figure 8-42. Combined skin and stringer repair

Longeron Repair

Longerons are primary lengthwise structural members which are usually fairly heavy. They serve approximately the same purpose at stringers but differ in their heavier size and continuous length through the aircraft or structural section. If the longeron consists of a formed section and an extruded angle section, it is known as a composite structural member. Each section of the composite member will normally be evaluated separately. The extruded section in such a composite member is repaired in the same manner as the stringer. See Figures 8-43A and 8-43B.

Spar Repair

Spars, also called beams, are the main spanwise members of wings, stabilizers, and other airfoils. They can run the entire length of the airfoil or only part of it. Spars primarily support bending loads imposed on the wing or other airfoil. The most common type of spar construction consists of extruding cap strips, a sheet metal web or plate, and vertical angle stiffeners. Repairs on spars may not be permitted because stresses on these members are very high. If repairs are permitted, they must be made according to instructions in the applicable manual. See Figures 8-44A and 8-44B for a typical repair procedure.

Rib Repair

Ribs are the main chordwise structural members in the wings, stabilizers, and other airfoils. Ribs serve as formers for the airfoil, giving it shape and rigidity. They also transfer stresses from the skin to the spar. Ribs are designed to resist both compression and shear loads. The three general types of rib construction are: reinforced rib, truss rib, and former rib. Reinforced and truss ribs are both relatively heavy compared to former ribs; they are located at points where the greatest stresses are imposed. Former ribs are located at frequent intervals throughout the airfoil. Construction of a reinforcement rib is similar to that of spars; it consists of upper and lower cap strips joined by a web plate. The web is reinforced between the cap strips by vertical and diagonal angles. Reinforced ribs are much more widely used than truss ribs, which consist of cap strips reinforced only by vertical and diagonal cross members. Truss ribs are used in the wings of some larger aircraft.

Downloaded from http://www.everyspec.com

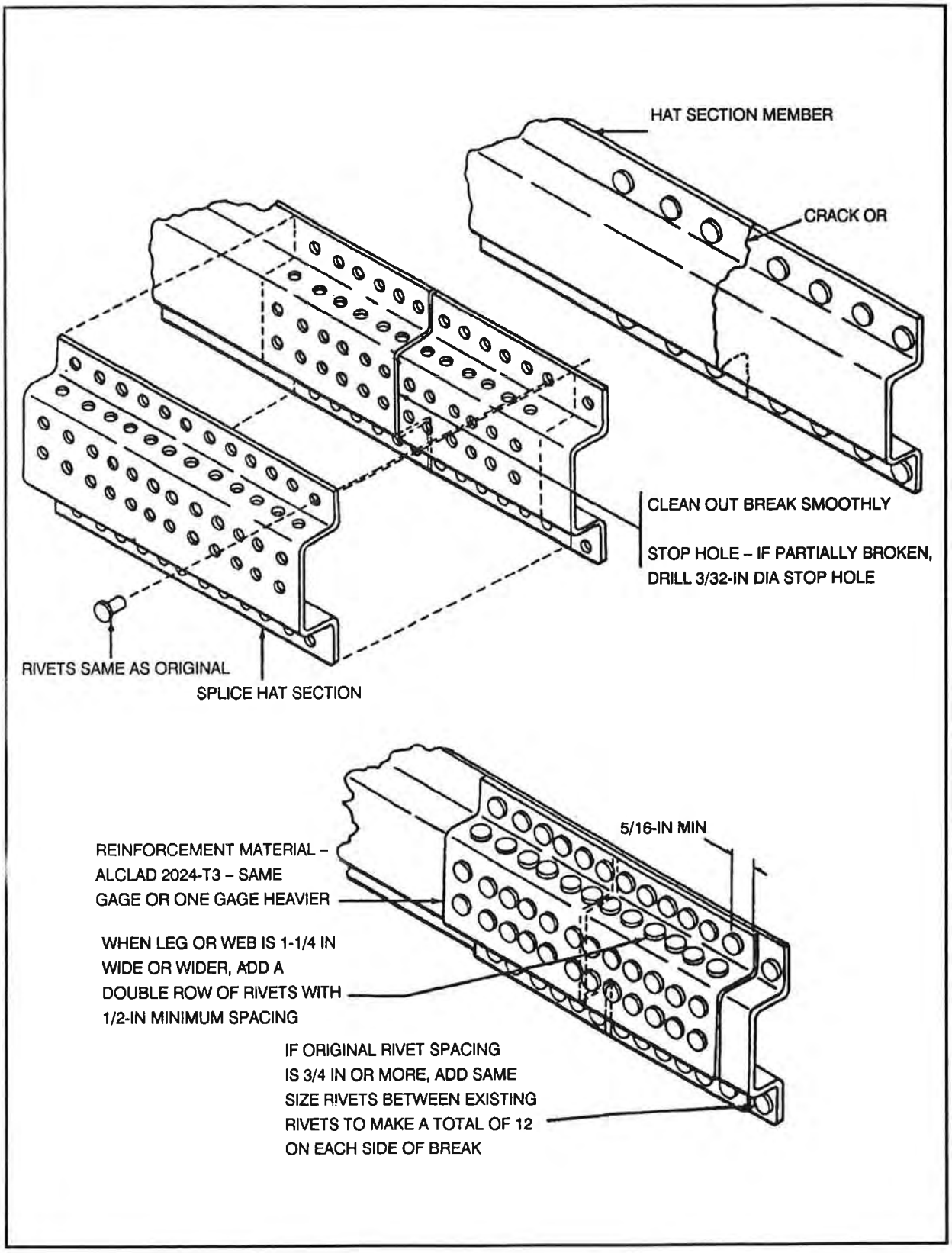

Figure 8-43A. Splice repair of hat section

Downloaded from http://www.everyspec.com

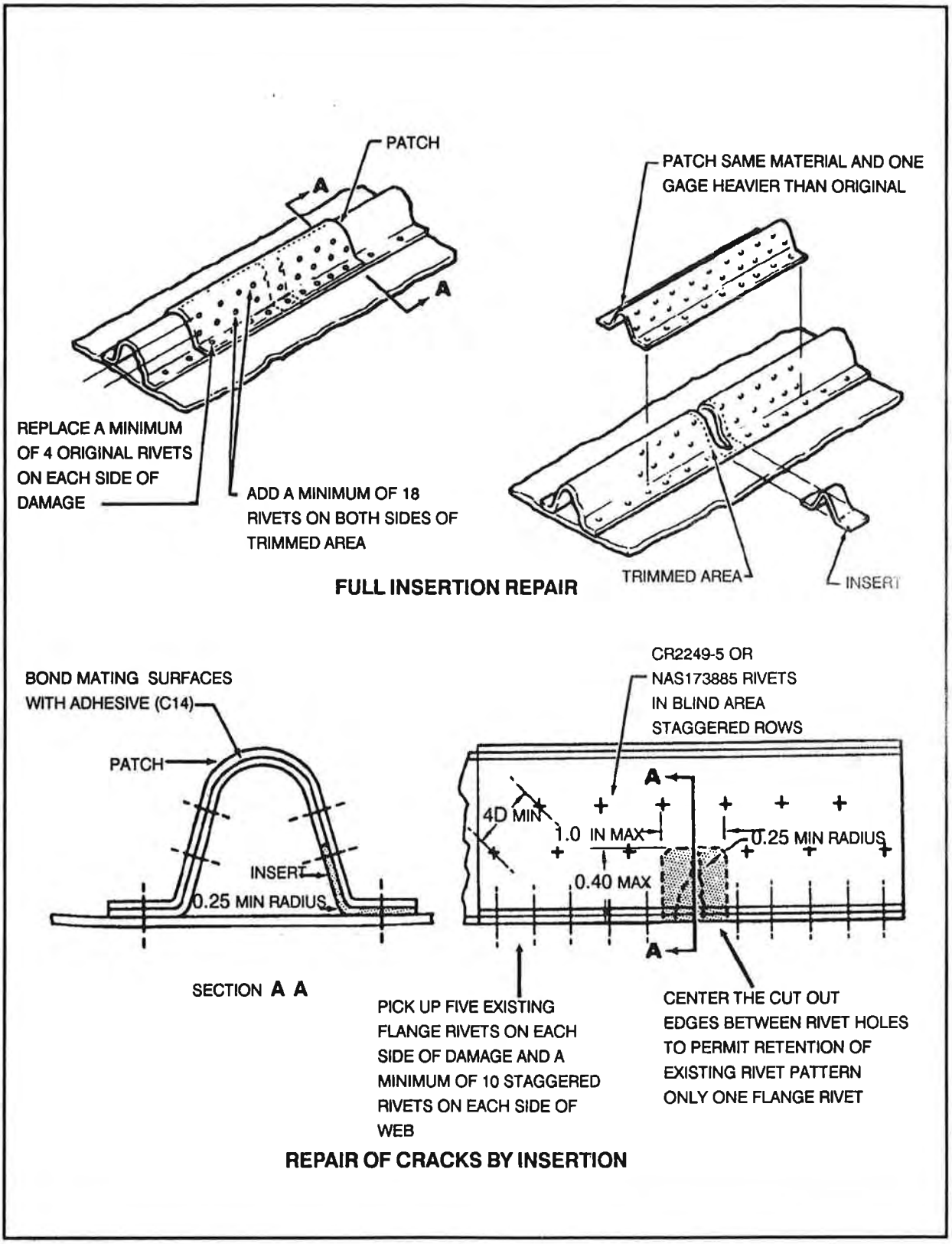

Figure 8-43B. Longeron damage and repair criteria

Downloaded from http://www.everyspec.com

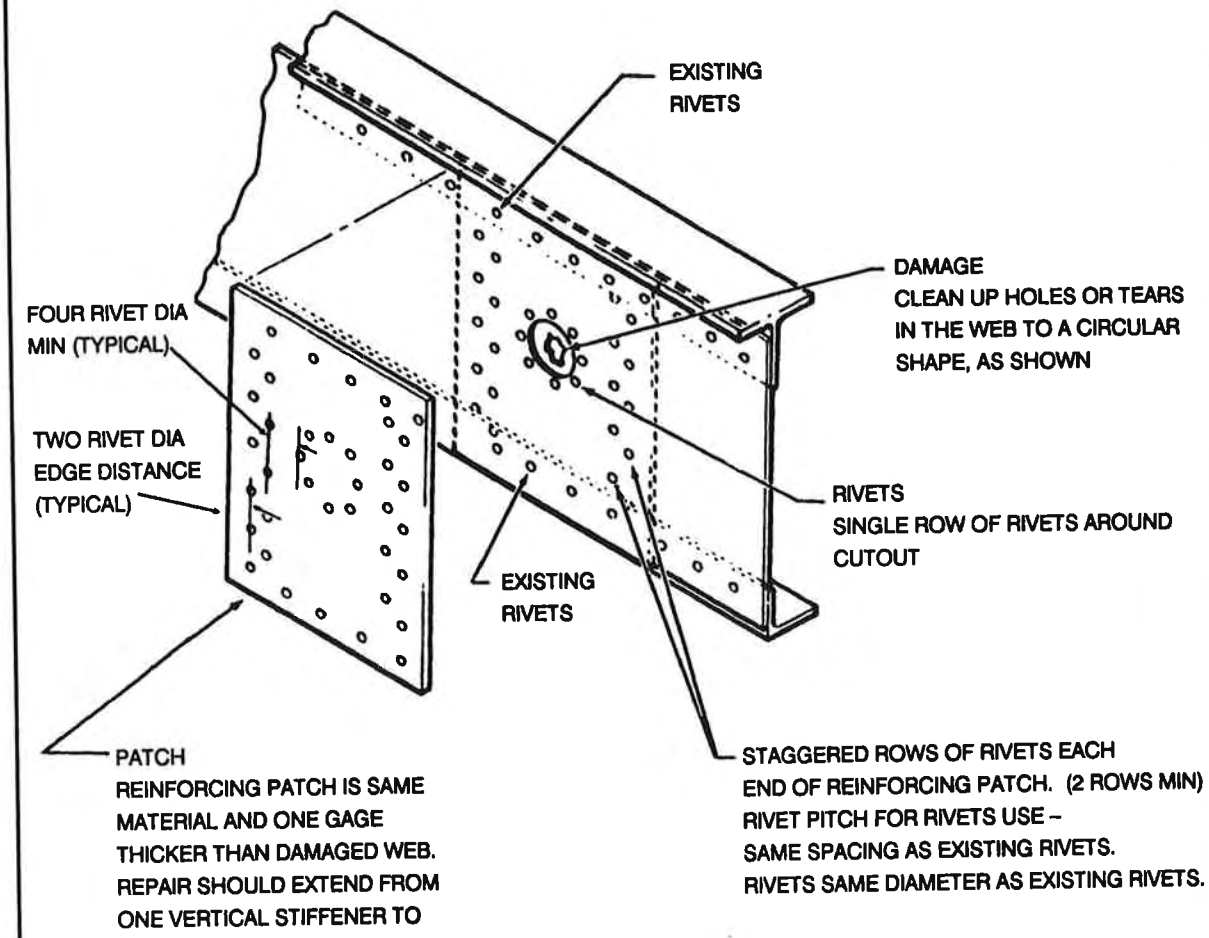

1. Maximum Diameter of Hole After Cleanup = 0.50 Inch.
2. Maximum Number of Repairs per Bay: One.
3. Minimum Distance From a Structural Member or Fitting: 1 Inch.

TYPICAL BEAM REPAIR

Figure 8-44A. Typical beam repair

Downloaded from http://www.everyspec.com

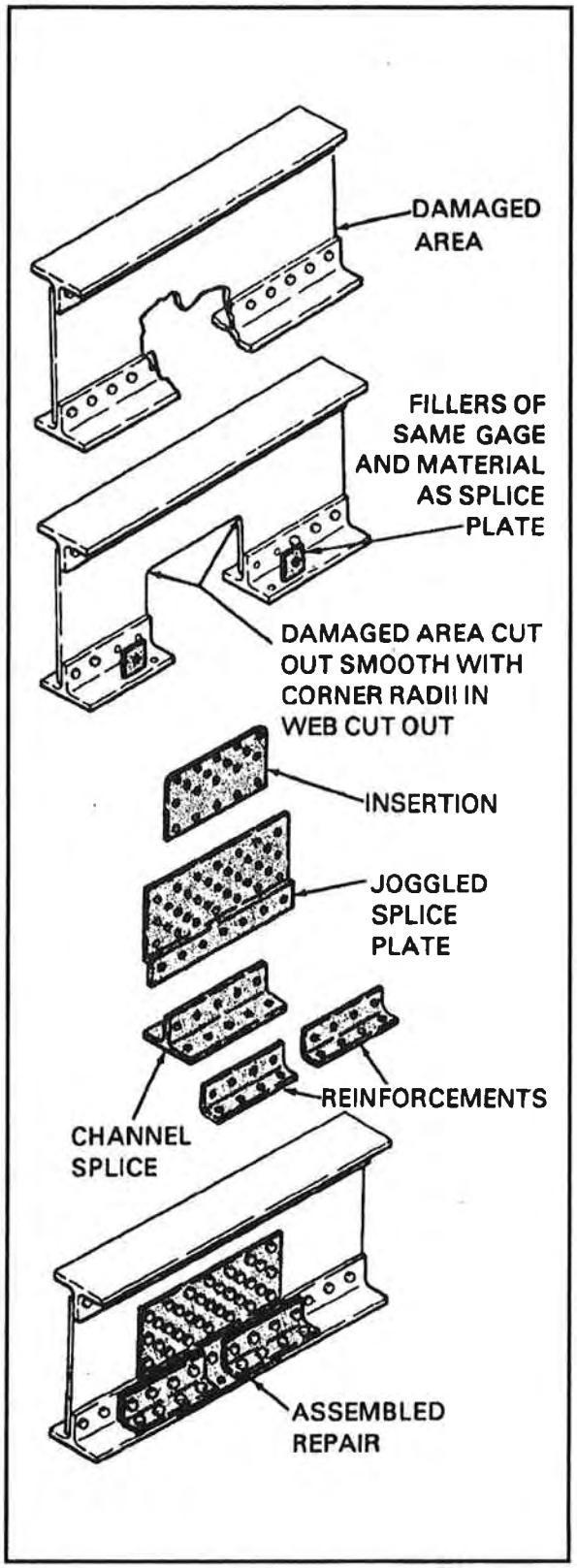

Figure 8-44B. Spar repair by insertion

Former ribs are made of formed sheet metal and are very lightweight. The correct term for the bent-up portion of a former rib is flange; for the vertical portion it is web.

A web is generally constructed of lightening holes with beads formed between the holes. These holes lessen rib weight without decreasing its strength. Lightening hole areas are made rigid by flanging their edges. The beads stiffen the web portion of the rib. Figure 8-45 illustrates rib repair by patching. Figure 8-46 shows an example of rib repair by insertion.

Former or Bulkhead Repair

Bulkheads (Figures 8-47, 8-48) are the oval-shaped members of the fuselage that determine the shape of the structure. Bulkheads or formers are often called forming rings, body frames, circumferential rings, or belt frames. They are designed to carry concentrated stress loads. There are various types of bulkheads; the most common type has a curved channel formed from sheet stock with stiffeners added. Other types have a web made from sheet stock with extruded angles riveted in place as stiffeners and flanges. Most of these members are made of aluminum alloy. Corrosion-resistant steel formers are used in areas exposed to high temperatures.

Spar Ribs and Bulkhead Repair

Damage to spar ribs and the bulkhead is classified in the same manner as damage to other members. Specifications for each type of damage are established by the manufacturer, and necessary information is also provided in the applicable aircraft manual. Bulkheads are identified by station numbers, which are very convenient for finding repair information.

Repairs to these members generally come under two categories:

- Damage involving one-third or less of the cross-sectional area.
- Damage involving more than one-third of the cross-sectional area.

When removing the section, take care not to damage the surrounding equipment, such as electrical lines, plumbing, and instruments. Use a hand file, rotary file, snips, or drill to remove larger sections. To

Downloaded from http://www.everyspec.com

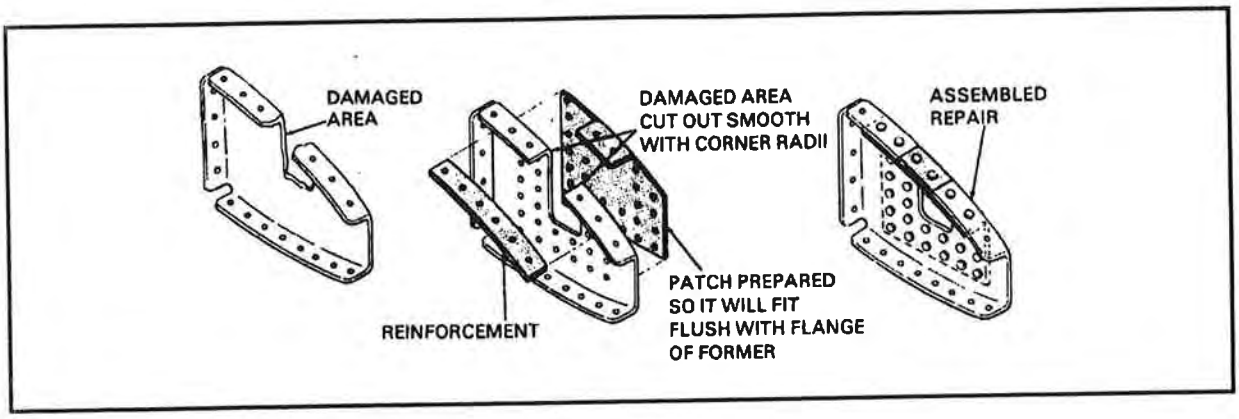

Figure 8-45. Rib repair by patching

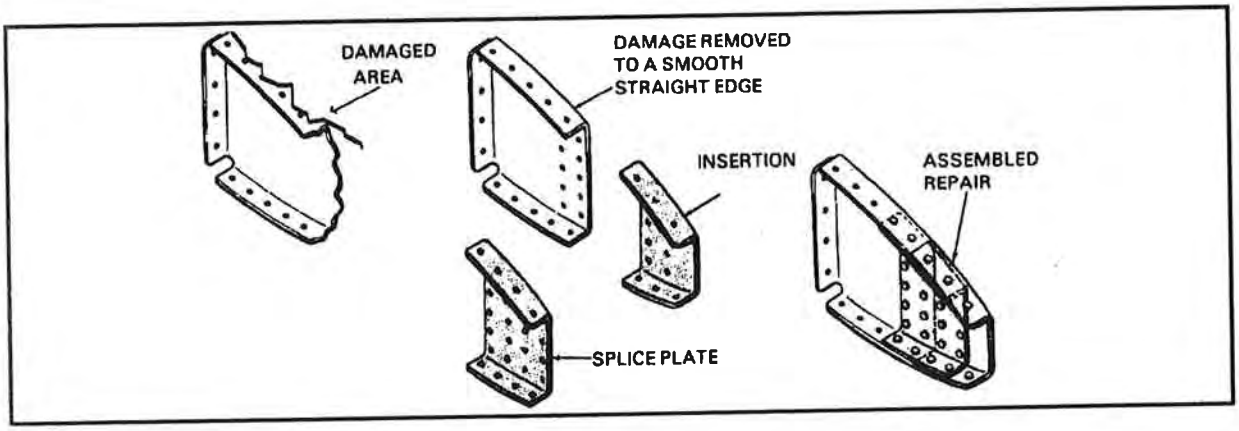

Figure 8-46. Rib repair by insertion

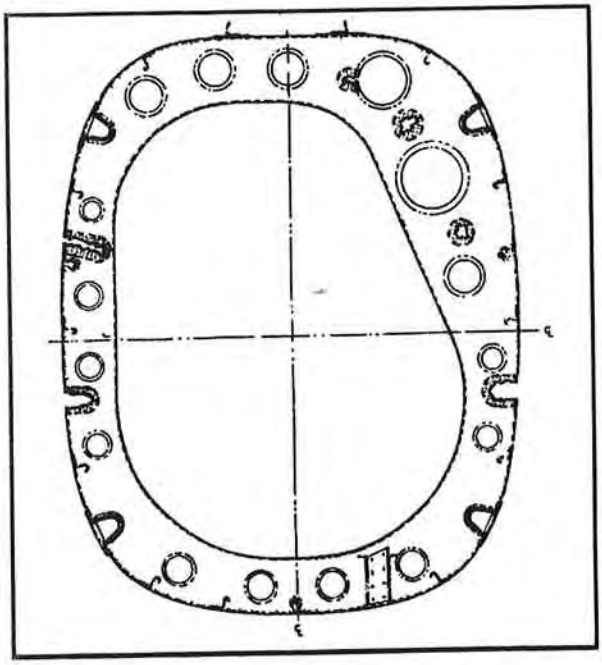

Figure 8-47. Bulkhead

remove a complete section, use a hacksaw, keyhole saw, snips, or drill.

Most repairs to bulkheads are made from flat sheet stock if spare parts are not available. When fabricating the repair from a flat sheet, use a material that provides the same cross-sectional tensile, compressive, shear, and bearing strength as the original. Never substitute thinner material or material with a smaller cross-sectional area than the original. See Figures 8-48 and 8-49A and B for typical repair procedures.

STRUCTURAL SEALING

Various sections in airframe structures where fuels or air must be confined to prevent them from spreading and causing corrosion are sealed. These sections contain fuel tanks and pressurized compartments, such as the pilot's compartment. Because they cannot be made completely airtight with a riveted joint

Downloaded from http://www.everyspec.com

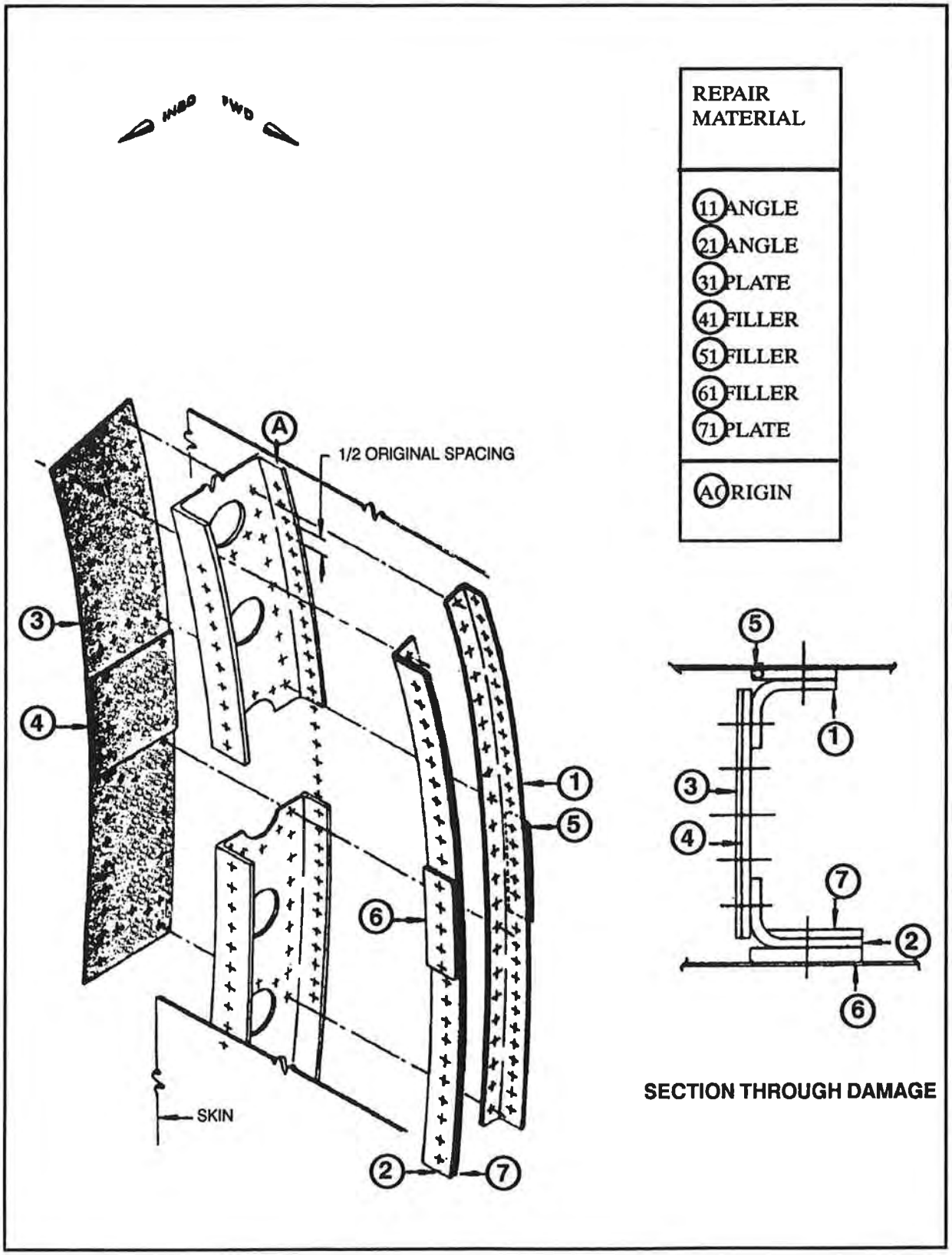

Figure 8-48. Bulkhead repair

Downloaded from http://www.everyspec.com

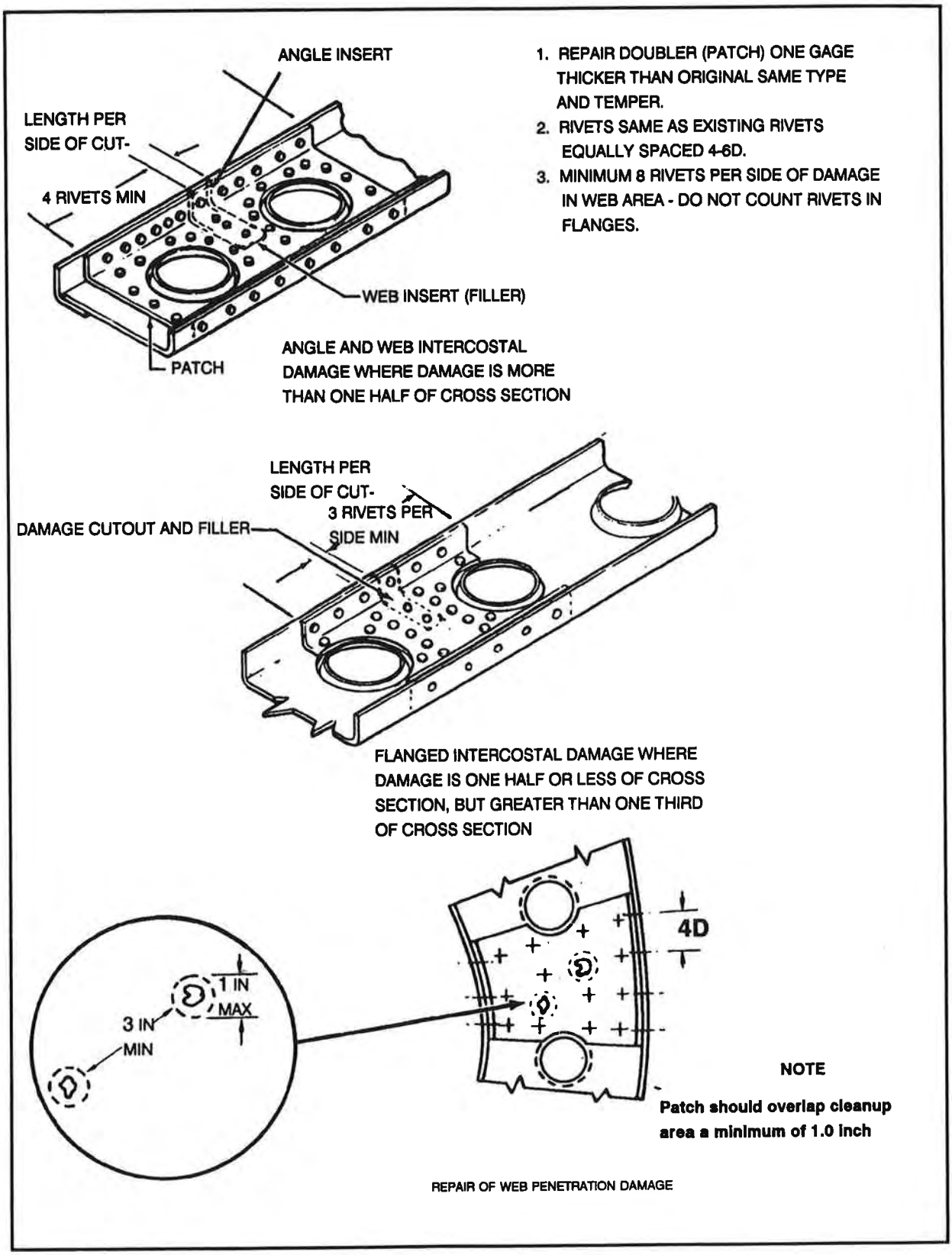

Figure 8-49A. Bulkhead, web damage, and repair

Downloaded from http://www.everyspec.com

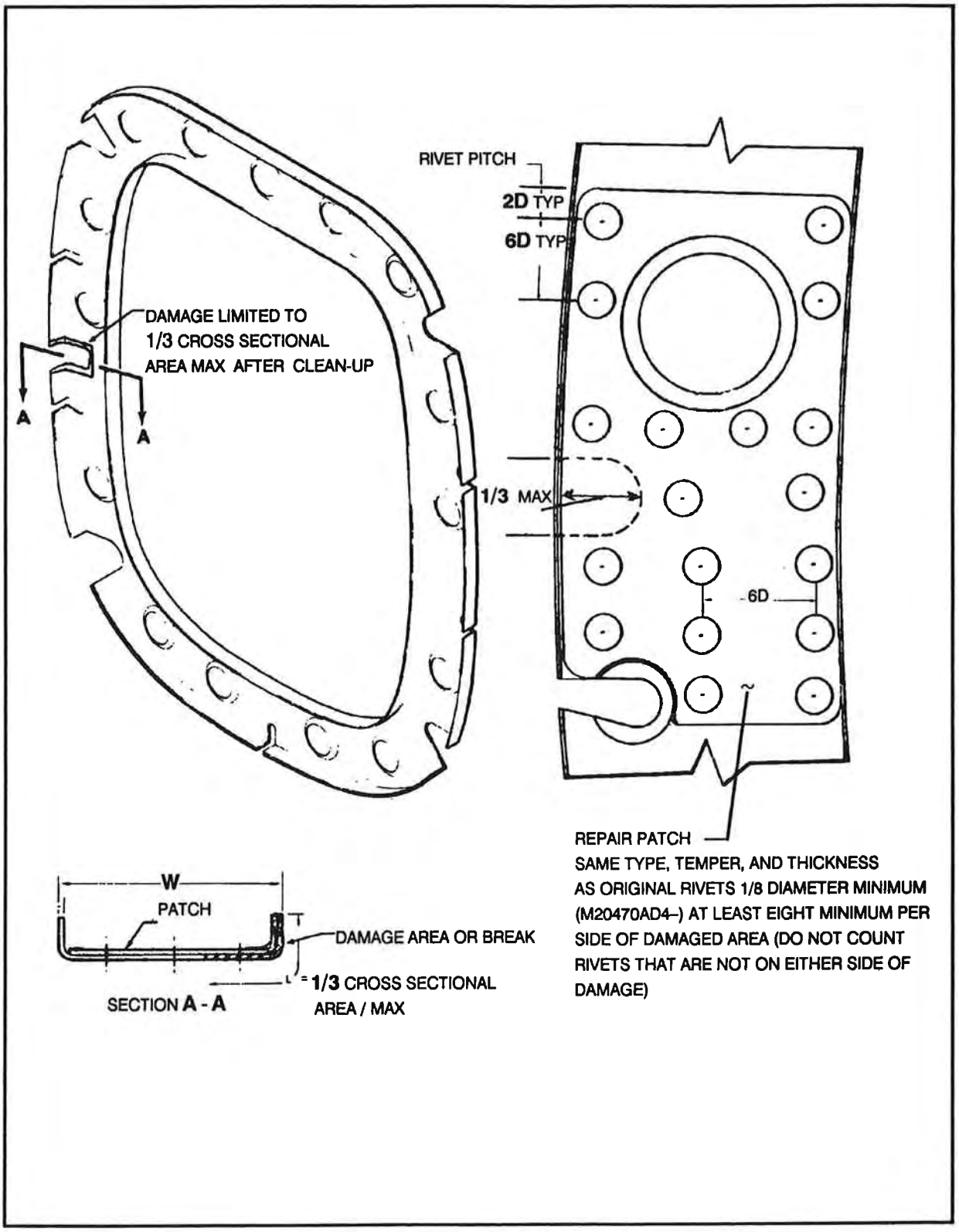

Figure 8-49B. Typical bulkhead, web damage, and repair for 1/3 or less cross-sectional area damaged

Downloaded from http://www.everyspec.com

alone, a sealing compound or sealant must be used. Sealants are also used to add aerodynamic smoothness to exposed surfaces, such as seams and joints in the wings and fuselage. Aircraft require sealing for waterproofing, weather tightness, and corrosion prevention.

Three types of sealants are commonly used to waterproof aircraft. Rubber seals are installed at all places where the seal must be broken periodically for maintenance; canopies and access doors, for example. Sealing compounds are used at points where the waterproof seal is seldom broken except to facilitate structural maintenance or part replacement, such as with riveted lap and butt seams. Special seals are required for installing cables, tubing, mechanical linkages, and wires removed from pressurized sealed areas.

Wires and tubing are installed through pressure bulkheads by means of bulkhead fittings, such as cannon plugs for wiring and couplings for tubing. These fittings are sealed to the bulkhead, and the wires and tubes are fastened to them from each side. All seals of moving components, such as flight controls, are subject to wear. Therefore, take care when installing them and check them during phase maintenance intervals.

Check the pressure tightness of an area both before and after making a repair. Ground pressurization is performed by filling the section with air from an external source through ground pressure test fittings. Refer to the applicable aircraft maintenance manual, TM 55-1500-204-25/1, TM 55-1500-344-23, and TB 43-0209, for complete requirements, specifications, and instructions for repairing or replacing sealants on aircraft.

SANDWICH CONSTRUCTION

Sandwich construction is defined as laminar construction consisting of alternating dissimilar materials. The materials are assembled and repaired in close relation to each other so that the properties of each can be used to obtain a compatible repair for the whole assembly.

Sandwich construction in flat or curved panels is commonly used on aircraft. The panels are made by laminating three or more very dissimilar materials that are considered similar when bonded together. The function of the center layer, or core, is to hold the other layers, or facings, apart and to provide enough stiffness to keep them from becoming elastically unstable when placed under high-stress loads.

The design of the sandwich panel is governed by its intended use because the panel itself is a separate structure. Such panels are useful in the manufacture and repair of aircraft because their composition of lightweight core materials in combinations with facings makes them strong and rigid while holding their weight to a minimum. Experimental applications, such as kevlar, using sandwich construction in the manufacture and repair of aircraft, are continually being made in the production of bulkheads, control surfaces, fuselage, wings, empennage skins, radomes, and shear web.

Core Materials

Core materials are very important in the manufacture of parts of sandwich construction because they provide much of the part's designed strength. These materials must be able to transmit stress loads while at the same time conforming to specific weight limitations. Stresses that the core is subject to vary widely with strength requirements of the sandwich construction and depend on its application. Therefore, the allowable weight of the core must be adjusted to its use. There are four general types of sandwich construction materials: natural, foamed or cellular, foamed-in-place, and honeycomb core.

Natural

Natural core materials are made of wood, principally balsa. Mahogany, spruce, and poplar are also used—though rarely—as inserts and edge banding.

Foamed or Cellular

Natural core materials have certain advantages, including variable density and high moisture absorption. Synthetic core materials like synthetic foam have been developed that have satisfactory strength properties. The specific gravity of base materials that are otherwise suitable is too high when used as a solid mass. Therefore, these materials must be foamed, expanded, or processed by some other method that reduces their apparent density to a suitable level. Processes used to do this can be controlled, which makes it possible to predict within marginal limits the physical properties of the resulting core material. Cellulose acetate, expanded rubber, and polystyrene are examples of

Downloaded from http://www.everyspec.com

foamed or cellular core materials available in various specific gravity ranges.

Foamed-In-Place

Certain types of radomes of sandwich construction must use core materials that provide desirable radiation transmission characteristics. The thickness of the structure must be tapered, and close control of facing, core, and sandwich thickness must be maintained. Core material has been developed that can be foamed in place between, and that will adhere to, premolded, laminated, glass-fabric-base, plastic facings. Although this core material is weaker than glass-fabric honeycomb, it has these advantages over the latter:

- Uniformity of cell structure.
- Elimination of core joints.
- Thinner, more uniform bending layer between facings and core.
- Accurately premolded, void-free inner and outer skins.
- Greater flexibility in manufacture.

Uniform density foams with 3- to 30-pound density per cubic foot have been produced using these materials. Materials with a density of 10 to 12 pounds per cubic foot are most common. These alkyd-diisocyanate foams have also been used for stabilizing hollow-steel propeller blades and control surfaces made from aluminum alloy.

Honeycomb

Honeycomb materials are now common in airframe structures. They are made by fabricating sheet materials so that a cross section resembles the honeycomb of a bee. The desired properties and densities are produced by varying the type and thickness of the sheet material and the cell size. Honeycomb core materials are available with a specific gravity range of 0.05 to 0.16 (3 to 10 pounds per cubic foot). Resin-impregnated glass and cotton cloth and aluminum foil are extensively used in the manufacture of aircraft sandwich materials. (Resin-impregnated paper has also proved effective and reliable as a honeycomb material; for example, in the construction of K-747 rotor blades.) Experiments and tests determined that glass fiber and magnesium are suitable materials for use in honeycomb structures, and they are now widely used. On the other hand, they determined that asbestos is not a suitable material in this type of construction. Honeycomb is a versatile, practical core material because of the wide variations and combinations of sheet and resin types, fiber direction, and cell sizes available and because of its extremely broad specific gravity range.

Glass. Glass-cloth honeycomb material is made by impregnating glass cloth with a polyester or phenolic resin. It is available in 3/16-, 1/4-, 3/8-inch hexagonal cell sizes. Specific gravities normally available are 0.08, 0.13, and 0.15 (5, 8, and 9 pounds per cubic foot); however, the specific gravity of each cell size can vary over a wide range.

Aluminum. Aluminum honeycomb material is made by corrugating sheets of aluminum foil and cementing them together to form the honeycomb structure. Density can be closely controlled by varying foil thickness and cell size. This material is available in 1/4-, 3/8-, and 1/2-inch lateral cell sizes. Perforations allow volatile gases to escape from and air to pass through the core structure. Limited double-curvature forming is possible by using lighter foil gages.

Facing Materials

Facing material is very important to effectiveness of aircraft parts of sandwich construction because facings carry the major loads applied to the structure. Facings must include the stiffness, stability, configuration, and strength that a given part needs. Facings are sometimes used to provide aerodynamic smoothness; rough, nonskid surfaces; and wear-resistant floor coverings. There are two types, depending on the materials used: those made of rigid, strong materials like metal, fiber-reinforced plastic, or plywood sheets bonded to the core; and those made of fabric or mat materials wet-laminated in place (here the resin gives the facing acceptable rigidity and secures the bond to the core). You must consider the advantages and limitations of each facing material and take care to choose a composition compatible with the requirements of the sandwich, the fabrication, the assembly, and maintenance.

Aluminum Alloys

Alloys with thickness of 0.12 to 0.0064 inch are common facings for structural and nonstructural sandwich applications. The aluminum alloys best suited for sandwich structures are 7075-T6, 2024-T3, and 2014-T6. Sheets coated with corrosion-resistant

Downloaded from http://www.everyspec.com

aluminum (clad) are preferred because they have maximum corrosion resistance during processing and under extreme weather conditions. Wrinkles, dents, and half-moons must not be made in aluminum sheets that are being stored because such defects cannot be removed completely during processing and could cause the panel to fail. Steel is not widely used in aircraft sandwich construction due to its poor corrosion resistance and high weight. An exception is in propeller blades of sandwich construction. This type of construction makes it possible to increase the size of the propeller and at the same time reduce the excessive weight.

Magnesium Alloys

Magnesium alloys are widely used where weight and strength are major considerations because of their low density and remarkable stiffness.

Resin-Impregnated Glass Cloth

Resin-impregnated glass cloth has acceptable characteristics as a facing on structural sandwiches. Because of its excellent dielectric properties, it is almost universally used for sandwich-constructed radomes. A wide range of directional-strength properties is possible using resin-impregnated glass cloth because it is available in various weaves that make it practical to fit the direction of the fiber to the facing.

Glass-Fiber Mats

Glass-fiber mats are now used in honeycomb sandwich construction. An example is in the rotor blades on the UH-60 Blackhawk.

Resin Adhesives

Synthetic resin adhesives can be used in fabricating plywood-faced sandwich parts. The type synthetic resin adhesive to use for a particular job depends on durability requirements; the effect of adhesive solvents on the core material; and the limits of bonding conditions, such as assembly time, pressure, and curing. Satisfactory resin adhesives have been developed for bonding metal to metal and metal to wood. Most of these adhesives are very complex and therefore are less widely used than the better-known woodworking adhesives.

Types

Resin adhesives are classified according to the curing temperature and technique. The three types of adhesives generally used for bonding are: high-temperature setting, combination or two-step setting, and room-temperature setting.

High-temperature-setting adhesives require that a joint be cured under pressure at temperatures of 250° to 350°F (121° to 177°C). Some of these adhesives are available in kits with two separate parts, either as a liquid and film tape, or as two liquids. These two-part adhesive systems are used to produce better adhesive flow characteristics during curing.

Combination or two-step setting adhesives are the same as those used for direct bonding to metal known as primers or primary adhesives; they are applied on the metal surface only. A primary adhesive is cured in an oven or on the platens of a hot press at temperatures of 300° to 335°F (149° to 168°C). Then final bonding of the primed metal to the core material is made under pressure at room temperature (or slightly higher) by using a secondary adhesive.

Room-temperature-setting adhesives are available. However, they have not proved capable of producing a bond comparable in strength and durability to that obtained by direct high-temperature-setting or two-step adhesives.

Many adhesives are sensitive to moisture, which makes it necessary to take additional precautions to prevent contamination by condensed moisture in the atmosphere. When a supply of adhesive is received, store it at temperatures from 35° to 70°F (2° to 21°C). Remove adhesives from cold storage and allow them to warm to room temperature before use. Covers should be tightly closed to prevent moisture from condensing during the warm-up period. Never return a partially filled can of sensitive adhesive to cold storage.

Storage

Recommended methods for storing and mixing adhesives vary with the manufacturer. Some recommend storing them at room temperatures, while others recommend temperatures of 35° to 70°F (2° to 21°C). Most manufacturers agree that adhesives be stored in tightly covered containers to prevent loss of solvents and contamination by dirt and moisture. Storage life of adhesives maintained at the above-mentioned temperatures varies from 4 months to several years.

Downloaded from http://www.everyspec.com

Application

Because ingredients in some adhesives tend to separate during storage, manufacturers recommend that they be thoroughly agitated in the container at least once every two weeks during storage and thoroughly mixed just before use. If an adhesive gells or is heterogeneous after mixing, do not use it unless the manufacturer recommends some method of breaking the gel.

Most available metal-bonding adhesives are supplied as one-part adhesives and require only thorough stirring before being used. A few are supplied as two-resin ingredients that must be applied successively to the surfaces being bonded. Follow the manufacturer's instructions closely when using these adhesives. An adhesive is sometimes too viscous to allow proper spreading by any method of application. When this occurs, thin it according to the manufacturer's recommendations.

The adhesives used in sandwich construction can be applied to facing surfaces by any convenient means that will spread them smoothly and uniformly. For example, you can use a brush, a hand roller, a putty knife, or any type of spatula.

Coin-Tapping Technique

For bonded honeycomb panels the manufacturer suggests taking a coin, such as a quarter, and tapping it lightly on the repaired surface while holding it between the thumb and forefinger to detect any area where the bond is not complete. A well-bonded spot will give off a sharp, metallic ring; an unbonded spot will give off a dull sound.

Bonded Panel Repair

Metal bonding and sandwich construction methods are similar in most aircraft. Recommended repair procedures and which adhesives and activators to use vary somewhat from aircraft to aircraft. Refer to the applicable aircraft maintenance manual and to TM 55-1500-204-25/1 for specifications on classification and repair.

Surface Cleaning

All manufacturers agree on one thing: the area to be bonded must be absolutely clean. They recommend several cleaning agents. Refer to the applicable aircraft maintenance manual and TM 55-1500-344-23 to determine the proper agent to use with a particular aircraft. TM 55-1500-344-23 also outlines cleaning procedures using all agents.

Downloaded from http://www.everyspec.com

Downloaded from http://www.everyspec.com

CHAPTER 9

AIRCRAFT PLASTICS

Plastics are used in many different parts and sections of an aircraft, such as windows, fairings, and structural components. With new technology in the plastics industry, aircraft metal components are being replaced by composite plastic structures that will provide greater survivability on the modern battlefield. This increasing use of plastics requires the aircraft structural repairer to have a thorough and current knowledge of aircraft plastics repair.

CHARACTERISTICS

Transparent thermoplastic materials are hard when manufactured, but they become soft and pliable when exposed to heat. Plastic can be molded when pliable, and it will retain the molded shape as it cools. When heated again and allowed to cool unrestrained, it will return to its original shape. This process can be repeated many times without damage to the material unless the specified heat ranges are exceeded.

TYPES AND IDENTIFICATION

Two types of thermoplastic commonly used in windows, canopies, and similar transparent aircraft enclosures are acrylic plastics and polycarbonate plastics. Cellulose acetate-base plastics are used in some trainers and other noncombat aircraft. Do not use acetate-base plastics as a substitute for acrylic plastics because of their inferiority in strength, resistance to weather, freedom from warpage, and transparency. Identify the original material before it is repaired or replaced. Refer to the applicable aircraft maintenance manual.

REPAIR TYPES AND PROCEDURES

The following repairs are for emergency use only. Replace the damaged section as soon as possible. Prior to repair being made, all cracks should be stop-drilled. Adhere to the following procedures to prevent further cracking. To stop-drill a crack, use a drill bit approximately 1/8 inch in diameter. Drill a hole at the end of each crack (Figure 9-1). This distributes the strain over a larger area and keeps the crack from spreading.

CAUTION

No repairs to transparent plastics authorized in critical-vision areas. Refer to applicable aircraft maintenance manuals.

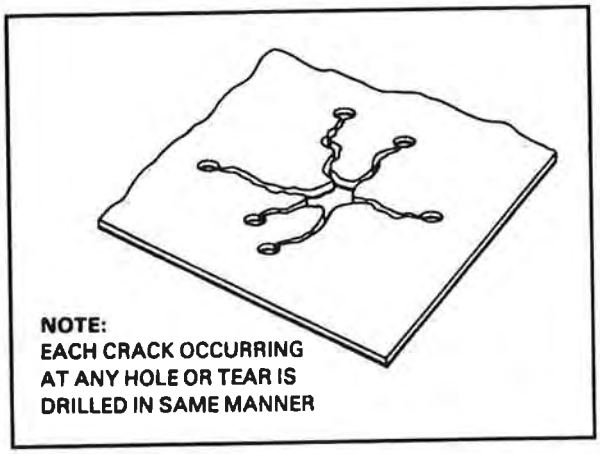

Figure 9-1. Stop drilling

For accuracy and safety, the plastic to be drilled must be clamped or fixed. Drills must have slow-spiral, polished flutes, which should be as wide as possible (Figure 9-2). A water-soluble cutting oil is the best lubricant and coolant for drilling plastics. No coolant is needed for drilling shallow- or medium-depth holes, but a coolant is desirable when drilling through thick plastics. The twist drills commonly used for soft metals can be used successfully for acrylic plastics if normal care is taken. However, for best results, regrind drills. The following considerations apply when regrinding:

- Properly grind drill so it is free of nicks and burrs that affect the surface finish.
- Dub off cutting edge to zero rake angle.
- Reduce length of the cutting edge, which determines the width of the chip, by increasing the included angle of the drill.

Downloaded from http://www.everyspec.com

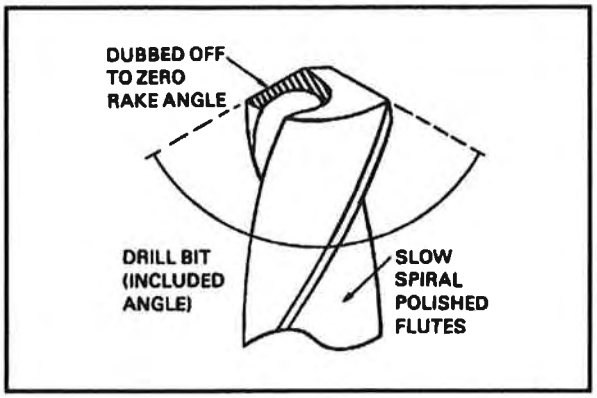

Figure 9-2. Drill for acrylic plastics

Lacing

To relieve strain that might increase damage, lacing is often used for repairing transparent plastic. Drill a series of holes at 1-inch intervals along each side of the crack at a margin depth of at least 1/2 inch (Figure 9-3). The holes on opposite sides of the crack may be staggered and laced diagonally, or they may be drilled directly opposite each other and the repair laced in the same manner as a boot or shoe. The latter method provides a snug, easily tightened repair and is generally preferred. Use strong, flexible wire, such as copper or brass lockwire, for lacing repairs. These are temporary repairs until permanent ones can be made.

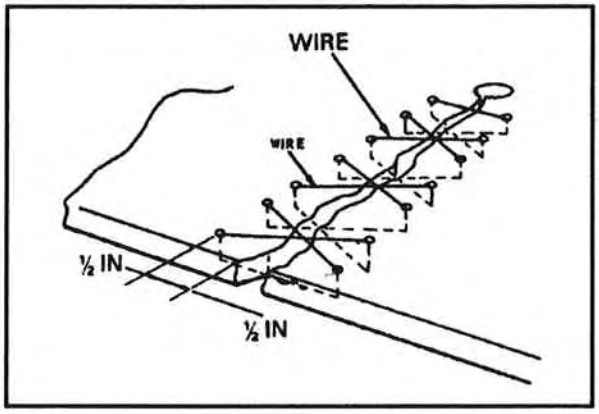

Figure 9-3. Lacing

Machine Screw Repair

Select machine screws that are long enough to extend all the way through the plastic and accommodate two flat washers and a nut. Drill a hole at the end of each crack (Figure 9-4), using a drill of a slightly larger diameter than the machine screw. Drill a series of holes through the cracks at intervals of about 1 inch. Place a flat washer under the head of each machine screw and install the screw in the hole. Do not place a machine screw in the holes that were drilled at the end of the cracks. Install a washer and nut on the protruding end of the machine screw and tighten securely.

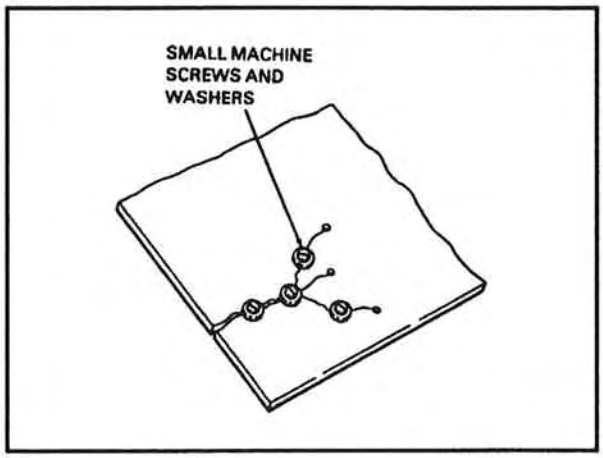

Figure 9-4. Repair with machine screws

Machine Screw Patch

Use a piece of plastic of the same type and thickness as the piece to be repaired. Cut it about 2 inches larger than the damaged area and bevel the edges (Figure 9-5). The machine screws must be long enough to extend through the patch and the damaged piece of plastic using two flat washers and a nut. Drill a hole at the end of each crack using a drill of a slightly larger diameter than the machine screws. Center a fabricated patch over the damaged area and secure in place with a clamp or jig. Drill enough holes through the patch and damaged piece of acrylic plastic to reinforce all fragments of the crack. Place a flat washer under the head of each machine screw and install the screw in the hole. Install a washer and nut on each machine screw and tighten securely.

Adhesive Repairs

Fill the cracks and drill holes with the applicable adhesive for the plastic being repaired. The adhesive is drawn into the cracks and holes by capillary action. This provides a watertight repair.

Permanent Repairs

For repair of clear plastics, consult the applicable aircraft maintenance manual.

Downloaded from http://www.everyspec.com

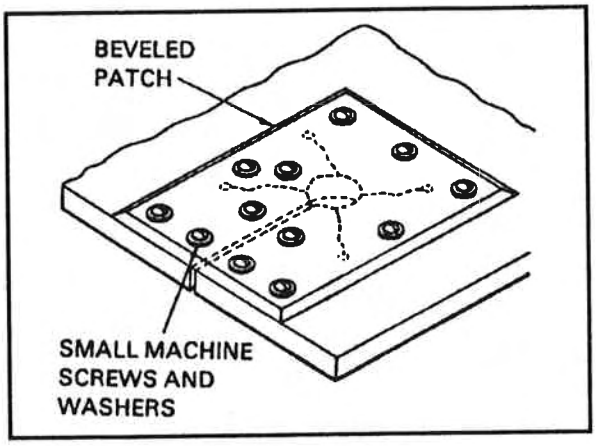

Figure 9-5. Patch repair using machine screws

TRANSPARENT PLASTIC PANEL INSTALLATION

There are several methods of installing transparent plastic panels in aircraft. The method used by the manufacturer will depend on the panel's position on the aircraft, the stresses it will be subjected to, and other factors. When installing a replacement panel, the airframe repairer should use, whenever possible, the same mounting method that was used by the aircraft's manufacturer. Refer to the applicable aircraft maintenance manual. Several different factors must be considered when plastic panels are being installed.

When it is difficult to install replacement panels using rivets, use bolts, provided that the manufacturer's original strength requirements are met and the bolts do not interfere with adjoining equipment. In some cases, replacement panels will not fit the installation exactly. When a replacement panel requires adjustment, consult the original design drawing, if available, to determine the proper clearances.

Fitting and handling should be done with masking material in place. Do not scribe the plastic through the masking material, which should be removed from the edges of transparent materials that will be covered or used for attachment. Transparent plastics are likely to craze when subjected to heavy stresses. Therefore, mount and install them to avoid these stresses.

Because transparent plastic is brittle at low temperatures, handle it carefully to prevent cracking during maintenance operations. If possible, install transparent plastic parts at normal temperatures.

Never force a transparent plastic panel out of shape to make it fit a frame. If a replacement panel does not fit easily into the mounting, either shape it to the exact size that conforms to the mounting frame or, if that is not possible, obtain a new replacement panel.

Do not reheat or reform panel areas. Local heating methods may be too superficial to reduce stress concentrations.

Because transparent plastics expand and contract about three times as much as metal parts, allow for changes in dimensions with rising and falling temperatures. Table 9-1 gives expansion and contraction allowances.

THERMOSETTING PLASTICS (REINFORCED FIBERGLASS)

Thermosetting plastics, commonly referred to as fiberglass or composite construction methods, are found throughout most aircraft. Repair procedures and adhesives vary from one aircraft to another. Refer to the applicable aircraft manual and TM 55-1500-204-25/1 for specifics on repair of damage.

Downloaded from http://www.everyspec.com

Table 9-1. Expansion and contraction allowances

Dimension of panel (in)**	DIMENSIONAL ALLOWANCE (IN) * ** ***	
	Required for expansion from 77° (25°C) to 158°F (70°C)	Required for contraction from 77°F (25°C) to -67°F (-55°C)
12	0.031	0.050
24	0.062	0.100
36	0.093	0.150
48	0.124	0.200
60	0.155	0.250
72	0.186	0.300

*Where the configuration of a curved part is such as to alter dimensional measurements by change of contour, the allowances may be reduced because this will not result in localized stress.

**For dimensions other than those listed, use necessary clearance.

***Installations that permit linear change at both ends require one-half the indicated clearances.

Downloaded from http://www.everyspec.com

CHAPTER 10

REBALANCING MOVABLE SURFACES

When repairs on a control surface add weight fore or aft of the hinge centerline, the surface must be rebalanced. Any control surface that is out of balance is unstable and, therefore, will not remain in a streamlined position during normal flight. For example, an aileron that is trailing-edge-heavy moves down when the wing deflects upward and up when the wing deflects downward. Such a condition can cause unexpected and violent maneuvers of the aircraft. In extreme cases, fluttering and buffeting can develop to a degree that could cause the complete destruction of the aircraft. If a movable control surface is to function properly, it must be in both static and dynamic balance. Balancing a control surface includes both static and dynamic balance. The instructions in this chapter are general in nature. For balancing control surfaces on a specific aircraft, refer to the applicable aircraft manual.

Section I. Surface Balancing Considerations

STATIC BALANCE

Static balance is the tendency of an object to remain stationary when supported from its center of gravity. The two conditions in which a control surface can be out of static balance are underbalance and overbalance.

When a control surface is mounted on a balance stand, a downward travel of the trailing edge below the horizontal position indicates underbalance. Some manufacturers indicate this condition with a plus (+) sign. Figure 10-1A shows the unbalanced condition of a control surface.

An upward movement of the trailing edge above the horizontal position indicates overbalance (Figure 10-1B). This is designated by a minus (-) sign. These signs show the need for either increased or decreased weight in the correct area to achieve a balanced control surface (Figure 10-1C).

A tail-heavy condition (static underbalance) causes undesirable flight performance and is not usually considered safe. A nose-heavy condition (static overbalance) results in more acceptable flight performances.

DYNAMIC BALANCE

Dynamic balance in a rotating body is where all the rotating forces are internally balanced so there is no vibration while the body is in motion. Dynamic balance in relation to control surfaces is an effort to maintain balance when the surface is subjected to movement; for example, when the aircraft is in flight. It involves putting weights in the correct places along the span of the surface. In almost all cases, the weight is located forward of the hinge centerline.

TERMS AND SYMBOLS

A knowledge of the following terms and symbols and their meanings will help the airframe repairer gain a

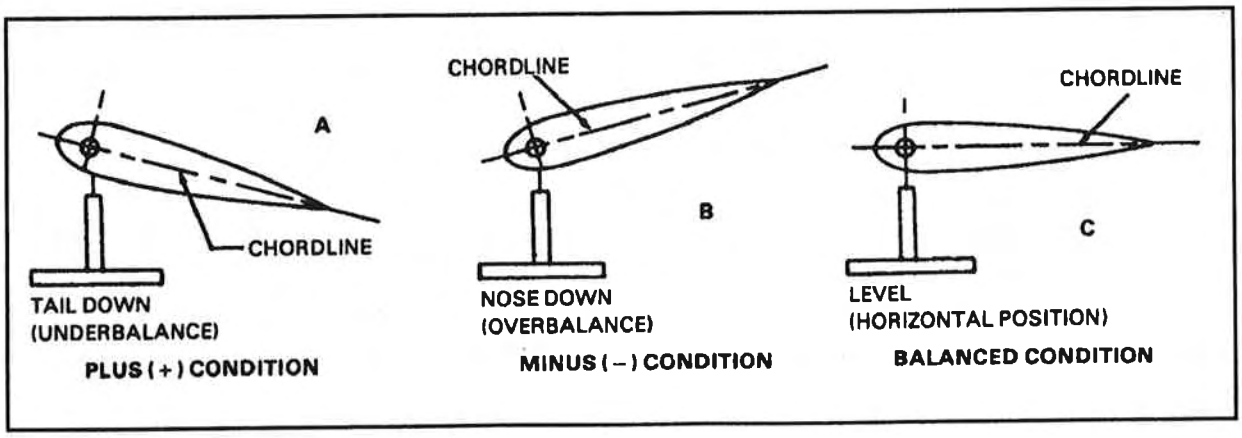

Figure 10-1. Control surface static balance

Downloaded from http://www.everyspec.com

better understanding of the procedures used for balancing, solving formulas, and locating reference points.

Weight Reaction (W_R)

Gross or calculated net weight used in formulas to obtain a balanced condition in a control surface unit or individual component is called weight reaction. It is expressed and recorded to the nearest hundredth of a pound and obtained with the chordline in a horizontal position (Figure 10-2). Weight reaction may also be defined as the force (in pounds) exerted on the control surface to cause it to move in a clockwise or counterclockwise direction. Figure 10-2 shows that weight reaction is the weight reading of the scale (in pounds) as the trailing edge of the control surface exerts pressure on the adjustable support and scale plate.

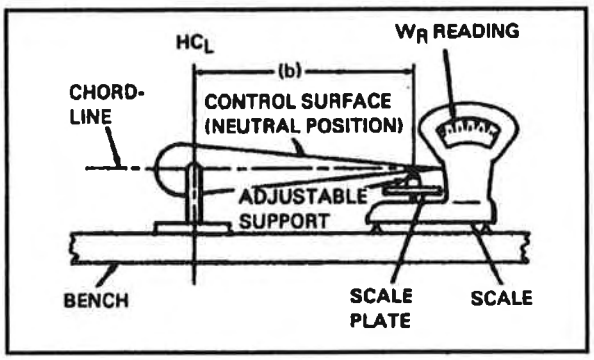

Figure 10-2. Determine balance or underbalance

Control Surface Assembly Weight (W_S)

Total weight of a control surface assembly is the control surface assembly weight. For example, to determine the total weight of an elevator and its assembly, the weight of the trim tab assembly, trim tab control pushrod, hinges, bearings, and their attaching parts must be included.

Weight (W)

This is the weight of an individual part of a control surface unit, such as the trim tab, trim tab control pushrod, and hinge.

Panel Weight (W_P)

Actual weight of a completely balanced panel, including the aft hinge pin and retainer and the forward fabric seal, is panel weight.

Center of Gravity (CG)

In control surface balancing, the center of gravity is that point at which the control surface may be balanced in any position. It is also the point of load concentration.

Hinge Centerline (HC_L)

The axis about which the control surface rotates (Figure 10-2) is the hinge centerline.

Minus or Negative Sign (-)

A minus or negative sign proceeding a W_R value indicates that the leading edge tends to move in a downward direction while the control surface moves in an overbalanced condition.

Plus or Positive Sign (+)

A plus or positive sign preceding a W_R value indicates that the trailing edge tends to move in a downward direction when the control surface is in an underbalanced condition. The unit must be rebalanced to limits as specified in the applicable aircraft manual.

Symbol or Letter "b"

This symbol represents the distance measured from hinge centerline to weight reaction at the point of the adjustable support or weight. It is known as the moment arm b. This distance is measured and expressed, and its value is recorded to the nearest hundredth inch (Figures 10-2, 10-3).

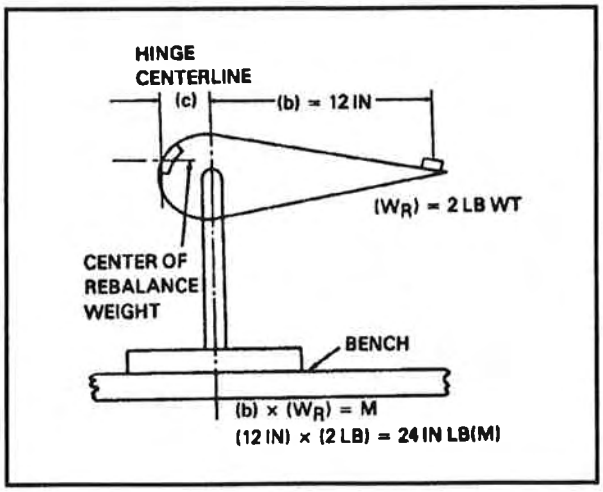

Figure 10-3. Effects of weight and distance

Downloaded from http://www.everyspec.com

Symbol or Letter "c"

This symbol represents the distance measured from the hinge centerline to the center of the balance weight. This distance is also measured and expressed, and its value is recorded to the nearest hundredth (Figure 10-3). Normally, this distance is forward of the hinge centerline.

Moment (M)

Moment is the combination of force (weight) and distance. Moment is also defined as the tendency of a force to cause rotation about a given axis. A simple example is that of force being applied with a wrench when turning or tightening a nut. Moment is shown in Figure 10-3 as (b) x (W_R).

Section II. Balancing Procedures

SURFACE BALANCING OR REBALANCING PRINCIPLES

The principles involved in balancing or rebalancing control surfaces are not hard to understand if a simple comparison is made. For example, a child's seesaw that is out of balance may be compared to a control surface that does not have balance weights installed (Figure 10-4). From this illustration, it is easy to see how a control surface is naturally tail-heavy.

An underbalanced condition causes a damaging flutter or buffeting on an aircraft. To correct this, add weights either inside the control surface or on its leading edge. When done properly, a balanced condition exists that may be compared to a seesaw with a child sitting on the short end of the plank (Figure 10-4).

The effects of moments on control surfaces can be easily understood by observing and studying more closely a seesaw that seats two children of different weights in different positions. Figure 10-5 shows a seesaw with an 80-pound child seated 6 feet away from the fulcrum point of the seesaw. The child's weight tends to rotate the seesaw clockwise until it touches the ground. To bring the seesaw into a level or balanced condition, the other child must be seated on the opposite end of the seesaw. To equalize the moment of the first child seated on the the short end of the seesaw, the second child would have to sit at a certain exact distance to the other side of the fulcrum point and weigh neither more nor less than a certain exact amount.

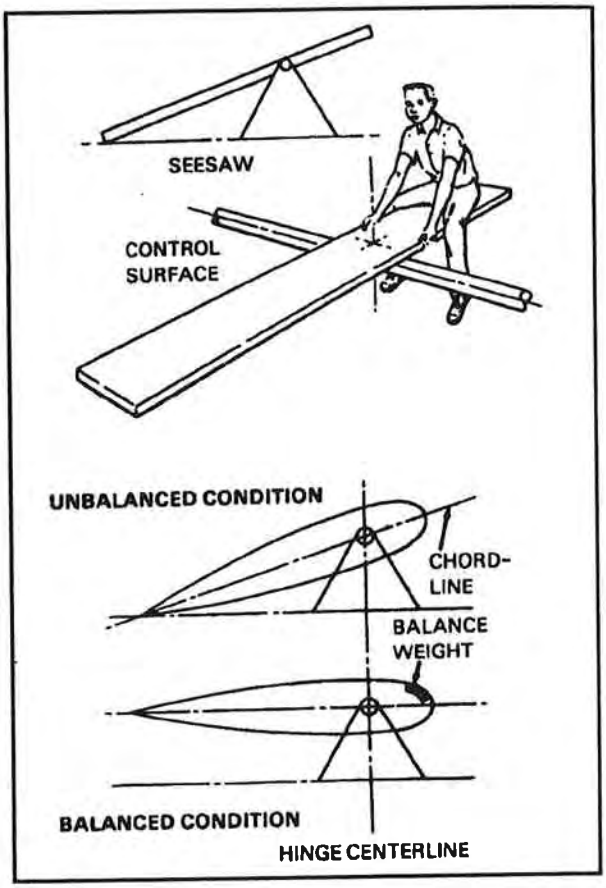

Figure 10-4. Unbalanced and balanced

Assuming that this second child is placed 8 feet to the right of the fulcrum point, a simple formula determines exactly how much the child would have to weigh to balance the seesaw or bring it to a level condition.

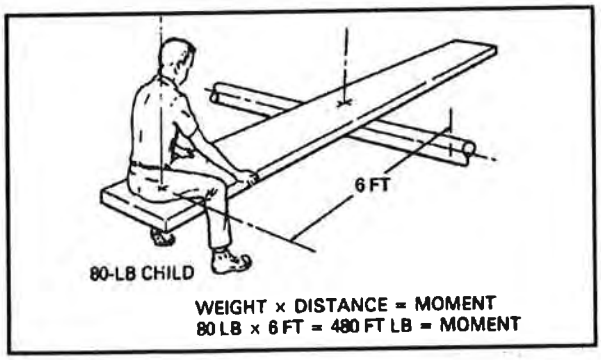

Figure 10-5. Moment

To produce a balanced condition of the seesaw (or control surface), the counterclockwise moment must

Downloaded from http://www.everyspec.com

equal the clockwise moment. Because moment is found by multiplying weight times distance, the formula to balance the seesaw is $W_2 \times D_2 = W_1 \times D_1$.

In this example, W_2 is the unknown weight of the second child. D_2 is the distance the second child is seated (8 feet) from the fulcrum. W_1 is the weight of the first child (80 pounds). D_1 is the distance the first child is seated (6 feet) from the fulcrum.

To find the weight of the second child, simply substitute and solve the formula, as follows:

$$W_2 \times D_2 = W_1 \times D_1$$

$$W_2 \times 8 = 80 \text{ pounds} \times 6 \text{ feet}$$

$$W_2 = 480 \text{ foot-pounds } 8 \text{ feet}$$

$$W_2 = 60 \text{ pounds}$$

The second child would have to weigh 60 pounds. To verify the formula: 60 pounds x 8 feet = 80 pounds x 6 feet.

480 foot-pounds = 480 foot-pounds

The seesaw is now in a balanced condition because the counterclockwise and clockwise moments around the fulcrum are equal.

The same effect obtained by adding the second child on the seesaw is also obtained in a control surface by adding weights forward of the hinge centerline. Most repairs to control surfaces are aft of the hinge centerline, which results in a trailing-edge-heavy condition. The correct balance weight must be calculated and properly placed.

SURFACE REBALANCING PROCEDURES

Repairs to a control surface or its tabs usually increase the weight aft of the hinge centerline. This requires static rebalancing of the control surface system and the tabs.

Requirements

To correctly rebalance a control surface, the following requirements must be met:

Remove control surfaces to be rebalanced from the aircraft and support from their own points on a suitable stand, jig, or fixture (Figure 10-6).

- When the control surface is mounted on the stand, secure trim tabs on the control surface in the neutral position. Stand must be level and located away from air currents. Control surface should rotate freely about the hinge points without binding. Determine balance condition by the behavior of the trailing edge when the control surface is suspended from its hinge points. Any excessive friction results in an incorrect reading of the overbalance or underbalance control surfaces.

- When installing a control surface in a stand or jig, establish a neutral position in a chord line direction (Figure 10-7). The chord line direction of any control surface is the distance or travel from the leading edge to the trailing edge. Sometimes only a visual check is needed to determine whether the surface is balanced or unbalanced. Use a bubble protractor (set at the correct angle specified in the applicable maintenance manuals) to determine the neutral position before continuing balancing procedures. If a bubble protractor is not available, find the neutral position by placing the control surface to the left or right in relation to a center balance.

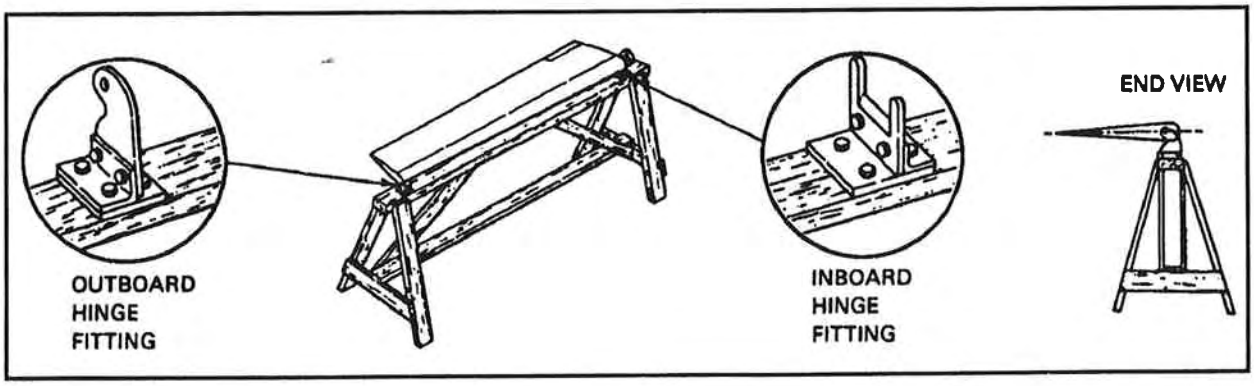

Figure 10-6. Field-expedient balancing jig

Downloaded from http://www.everyspec.com

- Position any trim tabs or other assemblies that are to remain on the control surface during balancing procedures. Before balancing, remove any assemblies or parts specified by the applicable aircraft maintenance manuals.

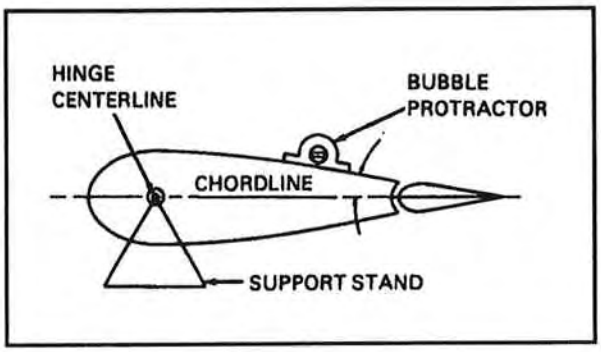

Figure 10-7. Establishing neutral position of a control surface

Methods

The four methods of balancing or rebalancing control surfaces used by aircraft manufacturers are commonly called the calculation, scale, trial weight (trial and error), and component methods.

Calculation

The calculation method of rebalancing a control surface is directly related to the balancing principles described above. The advantage it has over other methods is that it can be used without removing the control surface from the aircraft.

To use the calculation method, the airframe repairer must know the weight of the material removed from the repair area and the material used to make the repair. Measure in inches the distance from the hinge centerline to the center of the repair area. Measure the distance parallel to the chord line of the surface (Figure 10-8) to the nearest hundredth of an inch.

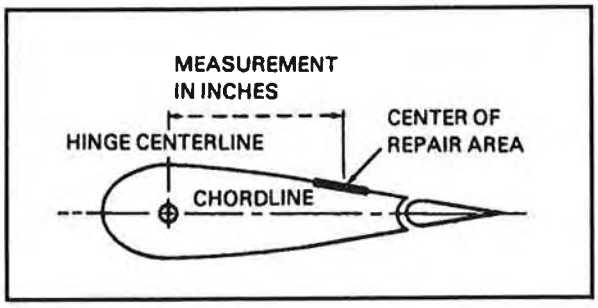

Figure 10-8. Calculation method

The next step is to multiply the distance times the net weight of the repair. The resulting product will be in inch-pounds. Consult the applicable aircraft manual to identify any further actions needed. If the result of the calculations in inch-pounds is within specified tolerances, the control surface is considered balanced. If it is not within specified limits, the appropriate technical manual specifies the weights to be added, the material to use for them, the design for their manufacture, and the places where they are to be installed.

Scale

The scale method of balancing a control surface requires a scale graduated in hundredths of a pound, as well as a support stand and balancing jigs for the surface. Figure 10-9 shows a control surface mounted for rebalancing.

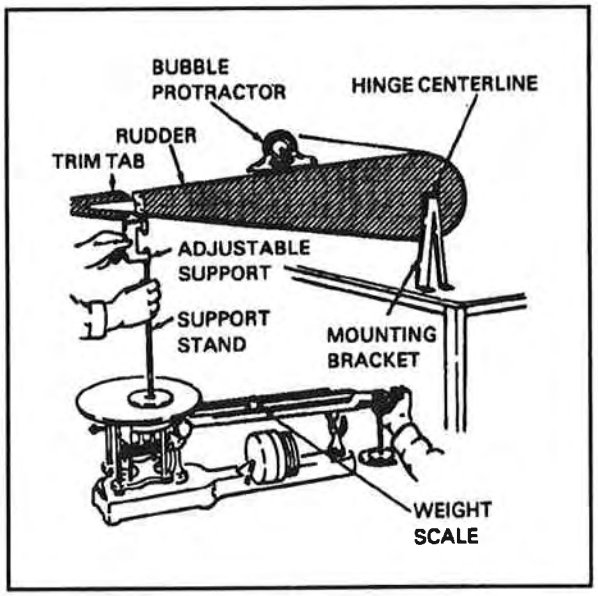

Figure 10-9. Rebalancing setup

The following factors apply when using the scale method.

Remove the control surface from the aircraft. Consult the applicable aircraft manuals to identify removal procedures and determine which parts or assemblies will be left attached to the surface.

Place the control surface in a neutral or level position. Use a bubble protractor set at the correct angle (as specified for that particular control surface by applicable manuals) to ensure that the chord line is in a horizontal position.

Downloaded from http://www.everyspec.com

Because the adjustable support is placed on the scale, include its weight in calculations when obtaining weight reactions. This may be done either by weighing the adjustable support fixture separately and subtracting its weight from the total weight reaction or by setting the scale at zero after mounting the adjustable support fixture.

Because most repairs to control surfaces are made aft of the hinge centerline, they will normally exert a downward force on the support stand and scale. To counteract the weight reaction, add an equal amount of weight to the forward section of the control surface. Refer to the applicable aircraft manual for the size, material, and positioning of weights needed.

> NOTE: Refer to the applicable aircraft manual to determine exactly where to place the support stand when balancing a control surface.

Trial Weight

The trial weight method is a means of balancing a surface with a known weight. The weight is positioned chordwise on the surface to obtain a level chord line.

Place the control surface in a jig or support stand and check for friction-free rotation about the hinge point. Consult the applicable aircraft manual to determine the weight value used for the specific type of aircraft and control surface.

Refer to the applicable aircraft manual to determine the limits (along the chord line of the surface) between which the selected weight would be placed to balance the surface. Place the selected weight in a specific location on the surface to determine whether it will balance the control surface. If these procedures result in a balanced control surface, no further action is necessary.

If the control surface is still not balanced, place additional weights anywhere on the opposite side of the hinge centerline. When enough material is added to balance the surface, weigh it and mark its location. The weight should be locally manufactured (or obtained from supply, if available) and placed in the location marked. Install it using any available fastening devices.

Component

The component method of rebalancing is a combination of the scale and calculation methods. Each component must be balanced by itself. It then maintains a specified moment (weight reaction) surrounding the hinge centerline of the surface. Balance control surface installations made up of these components within limits specified in the applicable aircraft manual. All components balanced by this method are considered compatible with other components on other complete units of the same type.

Fabrication

After calculating the required rebalance weights, fabricate and properly install them. These weights may be made of fan steel, lead, arch bronze, corrosion-resistant steel, or 4130 steel. The applicable aircraft manual normally gives the exact dimensions and material to use for local manufacture of weights needed to balance control surfaces. In many cases, the location and amount of clearance required determine the size and material of the weight. The weights of some metals widely used in fabrication are—

- Lead . . . . . .0.41 pounds per cubic inch.
- Fan steel . . . .0.602 pounds per cubic inch.
- 4130 steel . . .0.28 pounds per cubic inch.
- Corrosion-resistant steel . . . . . .0.31 pounds per cubic inch.

Downloaded from http://www.everyspec.com

GLOSSARY

adj	adjusting
AL	aluminum
alum	aluminum
aly	alloy
AMS	Aerospace Materials Specifications
AN	Air Force - Navy
AR	Army regulation
ASTM	American Society for Testing Metals
aux	auxiliary
AVIM	aviation intermediate maintenance
AVUM	aviation unit maintenance
AVSCOM	US Army Aviation Systems Command
CR	Cherrylock rivet
CRES	corrosion-resistant
CSK	countersunk
DA	Department of the Army
dia	diameter
ED	edge distance
FM	field manual
FOD	foreign object damage
IACS	International Annealed Copper Standard
in	inch
lb	pounds
lgth	length
LH	left hand
max	maximum
mfg	manufacturing
MIL-HDBK	Military Handbook
MIL-STD	Military Standard
min	minimum
MS	Military Standard
NA	not available
NAS	National Aircraft Standard
NC	National Coarse [thread series]
NF	National Fine [thread series]
no	number
nom	nominal
O/S	oversize
psi	pounds per square inch
rad	radius
reqd	required
RH	right hand
RPM	revolutions per minute

Downloaded from http://www.everyspec.com

SAE	Society of Automotive Engineers
spec	specification
SPF	stressed-panel fastener
sta	station
std	standard
TB	technical bulletin
temp	temperature
TM	technical manual
TO	technical order
USAALS	US Army Aviation Logistics School
USS	United States Standard

Downloaded from http://www.everyspec.com

REFERENCES

SOURCES USED

These are the sources quoted or paraphrased in this publication.

Army Publications

AR 385-10. *Army Safety Program*. 23 May 1988.
TB 43-0209. *Color, Marking and Camouflage Painting of Military Vehicles, Construction Equipment, and Materials Handling Equipment*. 29 October 1976.
TM 5-581B. *Construction Drafting*. 8 December 1972.
TM 43-0106. *Engineering Series for Aircraft Repair : Metals - General Data and Usage Factors*. 22 November 1967.

Air Force Publication

TO 1-1A-8. *Technical Manual Engineering Manual Series: Aircraft and Missile Repair.*

Index of Specifications and Standards (DODISS)

Part I, Alphabetical Listing.
Part II, Numerical Listing.
(Both updated annually, 1 July).

Industry Standard

ASTM B597-83. *Heat Treatment of Aluminum Alloys*. 1 June 1990.

DOCUMENTS NEEDED

These documents must be available to the intended users of this publication.

Army Publications

AR 385-32. *Protective Clothing and Equipment.* 31 October 1985.
AR 385-40. *Accident Reporting and Records*. 1 April 1987.
DA Form 2028. *Recommended Changes to Publications and Blank Forms*. February 1974.
TM 55-1500-204-25/1. *General Aircraft Maintenance Manual*. 6 April 1970.
TM 55-1500-344-23. *Aircraft Weapons System Cleaning and Corrosion Control*. 1 July 1988.

Downloaded from http://www.everyspec.com

Other

CherryLOCK. Locked Spindle Rivets and Tools.
CherryLOCK. Process Manual.
CherryMAX. Locked Spindle Rivets & Tools.
CherryMAX. Process Manual.
Cherry-MS. Rivets & Tools.
Cherry. Self-Locking Nuts.

Cherry Fasteners Towsend Division of Textron Inc.
Box 2157
1224 East Warner Avenue
Santa Ana, CA

Readings Recommended

These readings contain relevant supplemental information.

Army Publications

AR 310-50. *Authorized Abbreviations and Brevity Codes*. 15 November 1985.
FM 43-3. *Shop Mathematics*. 30 September 1975.
FM 55-414. *Fundamentals of Rotor and Powertrain Maintenance*. 27 June 1984.
MIL-HDBK-5E. *Metallic Materials and Elements for Aerospace Vehicle Structures*. 1 May 1989.
MIL-STD-10. *Rough Surfaces of Metals*. 3 January 1966.
MIL-STD-12D. *Abbreviations for Use on Drawings, Specifications Standards and in Technical Drawings*. 29 May 1981.
MIL-STD-455B. *Alloy Designation System for Wrought and Cast Copper and Copper Alloys*. 24 December 1975.
MIL-H-6875H. *Process for Heat Treatment of Steel*. 1 March 1989.
TM 55-1500-335-23. *Nondestructive Inspection Methods*. 1 June 1984.

Downloaded from http://www.everyspec.com

Index

Adhesive repairs, 9-2
Air density, 1-3
Airfoil, 1-1 - 1-2, 1-3, 1-10
  shape of, 1-3
  speed of, 1-3
Alclad, 2-12, 2-19, 8-3
Alloy, 2-3, 2-10. *See also* Aluminum
  cast, 1-20
  copper, 2-26
  designation of, 2-10
  ferrous, 2-3, 2-4
  industrial, 2-3
  magnesium, 2-19, 2-20 - 2-21, 5-2
  nonferrous, 2-3
  preparation of, 2-3
  wrought, 1-20, 2-16, 2-18
Alpha, 2-25
Aluminum, 2-10, 2-12, 2-19, 2-21, 5-1 - 5-2, 5-4, 8-36
  shrinking and stretching of, 5-14
  wrought, 2-12, 2-17
Angle of attack, 1-2
Angle of incidence, 1-2
Anneal. *See* Heat treatment
Austenite, 2-5
Auxiliary, 4-15

Back drilling, 8-22
Balancing, 4-5, 10-3, 10-5, 10-6
Bar folder, 3-35 - 3-36
Baseline, 8-14 - 8-15
Base measurement, 5-4
Beams, 8-29
Bearing strength, 6-6
Bench plates, 3-25
Bend
  allowance, 5-3 - 5-4, 5-6,5-10 - 5-12, 5-13, 5-18 - 5-19
  degree of, 5-4
  formulas, 5-5
  layout, 5-14
  radius, 5-3 - 5-4, 5-6, 5-12, 5-14, 5-19, 5-28
  straight-line, 5-14
  tangent lines, 5-4
  work, 5-14
Bernoulli's principle, 1-2
Beta, 2-25
Billet, 2-5
Bloom, 2-5
Blueprint, 4-16 - 4-18
  bill of material and specifications, 4-17
  change of revision block, 4-18
  finish marks, 4-17
  notes, 4-18
  station numbers, 4-17
  title block, 4-16 - 4-18
  tolerance, 4-18
  usage block, 4-18
  zone numbers, 4-17
Bolts, 7-1
  clearance of, 7-34
  close-tolerance of, 7-3
  composition of, 7-1
  grip length of, 7-2
  head markings of, 7-1
  hexagon-head, 7-2
  holes for, 7-35
  identification of, 7-1
  part number designation of, 7-1
Bolts, Huck lock, 6-1, 6-76
  blind type of, 6-77, 6-84
  inspection of, 6-84
  installation of, 6-77, 6-83
  procedures for, 6-77
  pull type of, 6-77, 6-83
  removal of, 6-84
  selection of, 6-77
  stump type of, 6-77, 6-83 - 6-84
  tools for, 6-77
Box-and-pan brake, 3-38
Brake or sight line, 5-4, 5-7, 5-13
  location of, 5-12
Brittleness, 2-1, 2-4, 2-6, 2-7 - 2-8
Bucking bars, 6-9, 6-14 - 6-15
Bulbed Cherrylock rivets. *See* Rivets, bulbed Cherrylock
Bulkheads, 1-3, 1-5, 1-9 - 1-10, 8-34
  repair of, 8-29 - 8-30, 8-34

Calculation, 10-6
Calipers, 3-3 - 3-4
  micrometer, 3-5 - 3-7
Camber, 1-1, 1-3
Camloc fastener, 7-37, 7-39, 7-44
  installation of, 7-39
  removal of, 7-39
Carbon, 2-7, 2-9 - 2-10
Casting, 2-5
C-clamp, 3-10, 6-9
Cementite, 2-7
Center of gravity, 1-1, 10-2
Centerline, 8-18
Charge, 2-17

Downloaded from http://www.everyspec.com

Chem-mill, 5-1
skin repair by, 8-6
Chisel, 3-21 - 3-22
Chord, 1-1
Chordline, 1-1
Chromium, 2-8
Circular repair layout, 8-18
Clad, 2-19
Cleco fastener, 3-10
Coin pressing, 6-14
Cold working, 2-1, 2-6, 2-8, 2-9, 2-10, 2-11, 2-16 - 2-17, 2-26
Combination repair, 8-12
Combination set, 3-1
Compression, 2-2
Conductivity, 2-1
Contour, 8-2
Contraction, 2-2
Control surface assembly weight, 10-2
Control surfaces. *See* Balancing
Core material, 8-36
foamed-in-place, 8-35
foamed or cellular, 8-35
honeycomb, 8-35 - 8-36
natural, 8-35
Cornice brake, 3-36 - 3-38
Corrosion
control, 8-3
resistance, 2-8, 2-10, 2-12, 2-18 - 2-19, 2-23
treatment, 8-6
Counterbores, 3-19
Countersinks, 3-19, 6-9, 6-10, 6-13, 6-14
machine (drill), 6-14
press (dimpling), 6-14
Critical points, 2-5
Cutting plane, 4-13

Damage
classification, 8-4
evaluation, 8-5
inspection, 8-3
Density, 2-2
Depth, definition of, 4-1
Diagonals. *See* Pliers, diagonal cutting
Dimensions
finish, 5-10
given, 5-10
Dimensioning, 4-6
angles, 4-6
circles, 4-7
curves, 4-6
dimension line, placement of, 4-6
finishes, 4-7
geometric solids, 4-7
holes, 4-7
large (complicated) objects, 4-8
small parts, 4-6
tapes, 4-6
tolerances, 4-8
Dimpling, 6-10, 6-13
Dividers, 3-3
Drag, 1-1 - 1-2
Drawbench, 2-6
Drawings, 4-9
pictorial, 4-9
projection, 4-9
sectional, 4-12
single-view, 4-9
size, 4-5
surface, 4-10
working, 4-11
Drills, 6-9
hand, 3-16
portable power, 3-31
press, 3-32 - 3-33
procedures for, 3-16
sharpening of, 3-17
sizes of, 3-17
stationary power, 3-32
twist, 3-16 - 3-18, 6-12
Ductility, 2-1, 2-3 - 2-4, 2-6 - 2-9, 2-23, 2-26
Dynamic balance, 10-1
Dzus fastener, 7-36 - 7-38, 7-39, 7-44
installation of, 7-39
removal of, 7-39

Edge distance, 8-12 - 8-13, 8-17
Elasticity, 2-1, 2-6
Empennage, 1-11
Expansion, 2-2
Extruded or formed angle, 5-17
Extruding, 2-5, 2-10, 2-22

Facing material, 8-36
aluminum alloys, 8-36
glass-fiber mats, 8-36
magnesium alloys, 8-36
resin-impregnated glass cloth, 8-36
Fasteners. *See also* Camloc fastener and Dzus fastener
high lock, 6-1
shear type, 6-18
special purpose, 6-1
turn-lock, 7-36
Ferrite, 2-5
Files, 3-19 - 3-21

Downloaded from http://www.everyspec.com

care and cleaning of, 3-21
cross filing with, 3-21
draw filing with, 3-21
flat, 3-20
half-round, 3-21
hand, 3-20
lead float, 3-21
mill, 3-20
rattail, 3-20
removing burrs or slivers with, 3-21
round, 3-20
rounding corners with, 3-21
square, 3-20
three-square, 3-20
triangular, 3-20
Fin, 1- 11
Flange, 1-11, 5-28, 8-29
Flanged angles, 5-18 - 5-20
shrinking, 5-18
stretching, 5-19
Flight control surfaces, 1-12
Flush skin repair. *See* Patches , external
Forging, 2-5, 2-7 - 2-8, 2-10, 2-17, 2-22
hammer, 2-5
press, 2-5
Formers, 1-3, 1-5, 1-9
repair of, 8-29
slip-roll, 3-38 - 3-39
Forming, 2-12, 5-1 - 5-3, 5-20
form block bumping, 5-22
sandbag bumping, 5-24
Forming blocks, 5-14, 5-16, 5-19 - 5-20
curving formed or extruded angles, 5-16
shrinking block method, 5-18
shrinking one flange, 5-17
stretching one flange, 5-17
V-block shrinking method, 5-18
Frame assemblies, 1-3
Furnace cooling, 2-4
Fuselage, 1-10 - 1-11
fixed-wing, 1-6
rotary-wing, 1-6
Fusibility, 2-2

Gages, 3-8 - 3-9
drill grinding, 3-9
radius, 3-8
sheet metal, 3-9
thickness, 3-8
thread, 3-9
twist drill, 3-9
wire, 3-9
Gap, 6-11
Grinders, 3-34
bench, 3-34
pedestal floor-type, 3-34
wet, 3-34
Grip, 6-73 - 6-74

Hacksaw, 3-22
Hammers, 3-14
ballpeen, 3-14
pneumatic gun, 6-10, 6-11, 6-14, 6-15, 6-18
planishing, 3-14
stretching, 3-14
Hardness, 2-1, 2-4, 2-6 - 2-9
testing for, 2-28
Heat treatment, 2-1, 2-3 - 2-5, 2-7 - 2-9, 2-10, 2-11, 2-12, 2-16 - 2-18, 2-22, 2-24, 2-25, 2-26, 2-28, 5-17, 5-20
annealing, 2-3 - 2-4, 2-6, 5-1, 5-2, 5-4
case hardening, 2-3 - 2-4
hardening, 2-3 - 2-4
methods of, 2-16
normalizing, 2-3 - 2-4
precipitation, 2-18
principles of, 2-4
procedures for, 2-18
solution, 2-17 - 2-18, 2-20, 5-1
tempering, 2-3 - 2-4
Height, definition of, 4-1
Hinge centerline, 10-2
Hi-shear rivets. *See* Rivets, Hi-shear
Hole and bolt fit, 7-34
Hole duplication, 6-9
Hole finder, 8-23
Horizontal stabilizer, 1-11
Hot working, 2-5, 2-22, 2-26
Huck lock bolts. *See* Bolts, Huck lock

Inconel, 2-26, 2-28

Jo-Bolts, 6-1, 6-84
head types of, 6-84
installation of, 6-89
removal of, 6-89
selection of, 6-89
Joggles, 5-25, 6-17

Lacing, 9-2
Leading edge, 1-1, 1-10 - 1-11, 1-13
Length, definition of, 4-1
Lift, 1-1 - 1-3, 1-6
Lines, 4-1
break, 4-4
centerline, 4-1, 4-7

Downloaded from http://www.everyspec.com

cutting-plane, 4-4
datum, 4-4
dimension, 4-2
extension, 4-2
hidden, 4-4
isometric, 4-15
leader, 4-2
outline, 4-4
phantom, 4-2
representing thread, 4-4
sectioning, 4-2
stitch, 4-4
viewing-plane, 4-4
visible, 4-4
Longeron, 1-5, 1-9, 1-11
repair of, 8-25

Machine screw patch, 9-2
Magnesium, 2-21, 5-2
alloys, 2-19, 2-20 - 2-21
bending (short radii) of, 5-3
cold working of, 5-2, 5-3
cutting of, 5-2
hot working of, 5-3
sawing of, 5-2
Malleability, 2-1, 2-7
Mallets, 3-14
plain-face, 3-14
stretching, 3-14
Mechanical milling, 5-1
Metals
ferrous, 2-10
internal structure of, 2-4
nonferrous, 2-5
Microfiche, 4-18
Microfilm, 4-18
Micrometer calipers. *See* Calipers, micrometer
Microshaver, 6-10 - 6-12
Minus or negative sign, 10-2
Mold point, 5-4
Molybdenum, 2-8
Moment, 10-3, 10-6
arm b, 10-2
Monel, 2-26
Monospar construction, 1-12
Multispar construction, 1-12

Nacelles, 1-6, 1-9
Nest, 6-14
Neutral axis, 8-5
Nonflush skin repair. *See* Patches, external
Nose assembly, 6-18
Nuts, 7-3, 7-35, 7-36
coding of, 7-4
identification of, 7-3
non-self-locking, 7-5, 7-33
plate, 7-5
self-locking, 7-5, 7-33

Open area, 8-7
cutoff size, 8-7
stress relief, 8-7
Overbalance, 10-1

Packing, 2-4
Panel weight, 10-2
Patches, 8-7
external, 8-7
flush, 8-12, 8-21
internal, 8-11
lap, 8-12, 8-20
overlay, 8-19
procedures for, 8-20
Patterns, 5-8, 5-25
duplicating, 5-14
first flat, 5-10
flat layout, 5-10
second flat, 5-11
third flat, 5-12
Phosphorus, 2-7
Pilot hole, 6-12, 6-14
Pliers, 3-11 - 3-12
clamp, 3-12
combination, 3-11
diagonal cutting, 3-11
flatnose, 3-11
flatnose side-cutting, 3-11
roundnose, 3-11
special cleco fastener, 3-12
Plus or positive sign, 10-2
Pressing, 2-6
Projection lines, 4-9. *See also* Drawings
Punch-and-die set, 6-10
Punches, 3-23
automatic center, 3-24
center, 3-24
drive, 3-24
hollow, 3-23
pin, 3-24
prick, 3-23, 8-23
rotary, 3-27 - 3-28
solid, 3-23
transfer, 3-24, 8-24

Rachet, 3-25
Radius bars, 5-14

Downloaded from http://www.everyspec.com

Raising hammers. *See* Hammers, stretching
Reach, 6-11
Reamers, 3-18 - 3-19, 6-9
Rebalance, 10-3
  requirements for, 10-4
Relative wind, 1-2
Repair
  circular layout, 8-18
  parts layout, 8-6
  permanent, 9-2
Resin adhesives, 8-36
  application of, 8-37
  combination or two-step setting of, 8-37
  high-temperature setting of, 8-37
  room-temperature setting of, 8-37
  storage of, 8-37
Resistance welding. *See* Welding, resistance
Ribs, 1-10 - 1-11
  repair of, 8-29
Rivet, hand set, 6-9
Rivets, bulbed Cherrylock, 6-21 - 6-22, 6-31
  installation of, 6-31, 6-39
  pulling heads for, 6-45, 6-48
Rivets, Cherrylock, 6-39, 6-45, 6-44 - 6-45, 6-48
  adapter for, 6-48
  extension for, 6-48
  G-36 hand riveter for, 6-44 - 6-45
  G-700 lightweight riveter for, 6-45
  G -748 universal riveter for, 6-45
  gages, for 6-48
  inspection of, 6-39
  installation of, 6-31, 6-39
  pulling heads for, 6-48, 6-48
  removal of, 6-42 - 6-43
  service kits for, 6-51
  707A77 air bleeder for, 6-51
  troubleshooting of, 6-39, 6-42
Rivets, CherryMAX, 6-21, 6-51, 6-62, 6-64, 6-66 - 6-68, 6-70
  adapters for, 6-64 - 6-65
  conversion kits for, 6-65
  D-100 hand riveter for, 6-62
  G-27 hand riveter kit for, 6-51, 6-62
  G-701 power riveter for, 6-62
  G-704 power riveter for, 6-62, 6-64
  G-749 hand riveter for, 6-62
  gages for, 6-64
  grip length for, 6-51
  hydro-shift riveters for, 6-65
  inspection of, 6-70
  installation of, 6-68
  MS-type riveters for, 6-66
  pulling heads for, 6-64
  removal of, 6-70
  service kits for, 6-65
  700A77 air bleeder for, 6-65
  special assembly tools for, 6-65
  stem catcher bag for, 6-65
  strength of, 6-51
  tool capacity chart for, 6-66, 6-68
  tooling for, 6-51
  troubleshootng of, 6-70
Rivets, Hi-shear, 6-1, 6-75 - 6-77
  inspection of, 6-75 -6-76
  installation of, 6-75
  removal of, 6-75 - 6-76
Rivets, solid-shank, 6-1
  bearing failure of, 6-16
  countersinking of, 6-13 - 6-14
  cutters for, 6-9
  dash numbers for, 6-2
  diameter of, 6-5, 6-6 - 6-7
  dimpling of, 6-13 - 6-14
  drilling of, 6-12 - 6-13
  driving of, 6-14 - 6-16
  failure of, 6-16
  head failure of, 6-16 - 6-17
  icebox, 6-5
  inspection of, 6-16
  length of, 6-6
  markings of, 6-1, 6-5
  pilot hole of, 6-12
  removal of, 6-17 - 6-18
  riveting of, 2-16, 8-6
  shear failure of, 6-16
  size of, 8-13
  special hand tools for, 6-7 - 6-10
  special power tools for, 6-10 - 6-12
  strength of, 6-6
  types of, 6-1
Rivets, special, 6-17 - 6-21
  blind, 6-17
  inspection of, 6-18
  installation of, 6-18
  removal of, 6-21
  selection of, 6-18
  self-plugging (friction lock), 6-18, 6-21
  self-plugging (mechanical lock), 6-21
  type of, 6-17
Rivets, wiredraw Cherrylock, 6-31
  pulling heads of, 6-45, 6-48
Rivnuts, 6-1, 6-73 - 6-75
  installation of, 6-74 - 6-75
  removal of, 6-75
  selection of, 6-73
Rockwell hardness tester, 6-5

Downloaded from http://www.everyspec.com

Rolling, 2-10, 2-22
Rotor blades (rotary-wing), 1-6
Rules, 3-1, 3-3

SAE numbering system, 2-9
Sandwich construction, 8-34 - 8-37
  bonded panel repair, 8-38
  coin-tapping technique, 8-37
  surface cleaning of, 8-38
Saws, 3-29 - 3-30
  contour band, 3-30
  ketts, 3-29
  power hacksaw, 3-30
  reciprocating, 3-29
Scale, 4-5, 10-6
Screwdrivers, 3-24 - 3-25
  offset, 3-25
  Phillips, 3-24
  Reed and Prince, 3-25
  standard, 3-24 - 3-25
Scriber, 3-1 - 3-3
Sealants, 8-34
Setback, 5-4, 5-6, 5-10 - 5-12
  K-chart for, 5-6
  formula for, 5-6
Shear, 2-3
Shear strength, 6-6
Shears, 3-15
  bench, 3-15
  C-clamp, 3-10
  cleco, 3-10
  general shop vise, 3-10
  hand, 3-15
  scroll, 3-27
  squaring, 3-27
  sheet metal holders, 3-10
  throatless, 3-27
Shop head, 6-1, 6-5 - 6-6, 6-9, 6-17
Shrinking-and-stretching machine, 3-41
Silicon, 2-7
Skin repair
  circular layout for, 8-17 - 8-19
  layout for, 8-13 - 8-17
  patching procedures for, 8-19 - 8-12
  replacement for, 8-21 - 8-23
  rivet pattern for, 8-12 - 8-13
  stressed, 8-6
Slabs, 2-5
Sleeve and drawbolt, 6-18
Smith forging. *See* Forging
Snips
  aviation, 3-15
  circle, 3-16
  straight, 3-15
Spark test, 2-10, 2-23
Spar ribs
  repair of, 8-30
Spars, 1-10 - 1-11
  repair of 8-25
Spot welds. *See* Welding, resistance
Springback, 3-38
Stainless steel, 5-1 - 5-2
Stakes, 3-25
  beakhorn, 3-26
  blow-horn, 3-26
  bottom, 3-26
  candle-mold, 3-26
  conductor, 3-26
  creasing, 3-26
  double-seaming, 3-26
  hatchet, 3-26
  hollow mandrel, 3-26
  needle-case, 3-26
  roundhead, 3-26
  solid mandrel, 3-26
  square, 3-26
Stamping, 2-6
Static balance, 10-1
Steel, 2-4, 2-7
  alloy, 2-3
  carbon, 2-8
  changes in, 2-4
  chrome-molybdenum, 2-8
  chrome-vanadium, 2-8
  chromium, 2-8
  high grade, 2-9
  nickel, 2-7, 2-9
  nickel-chrome, 2-9
  special, 2-3
  stainless, 2-9
Stiffeners, 1-11
Stop-drill, 9-1
Strain, 2-2
Strength, 2-2, 2-4, 2-6 - 2-10, 8-1 - 8-2
Stress, 2-2 - 2-3, 2-4, 2-23, 5-4, 8-4
  basic, 8-4
  bending, 8-4 - 8-5
  combination, 8-4
  compression, 8-4 - 8-5
  relieving, 5-28
  shear, 8-4 - 8-5
  tension, 8-4
  torsion, 8-4 - 8-5
Stringers, 1-3, 1-5, 1-10
  repair of, 8-24
Structural members, 1-3

Downloaded from http://www.everyspec.com

Structural repair
corrosion control of, 8-3 - 8-4
damage classification of, 8-4
damage inspection of, 8-3
stresses of, 8-4
Structural repair, internal, 8-23 - 8-30
former (bulkhead), 8-29
longeron, 8-25
rib, 8-25, 8-29
spar, 8-25
spar ribs (bulkhead), 8-29 - 8-30
stringer, 8-24
Structure, 1-3
monocoque, 1-9
monocoque type, 1-3
semimonocoque, 1-9
semimonocoque type, 1-3
Substructural areas, 8-7
edge distance of, 8-7
rivet spacing of, 8-7
Sulfur, 2-7

Tapes, 3-1
Temper designation, 2-10
Templates. *See* Patterns
Tension, 2-2 - 2-3
Thermoplastic, transparent, 9-1
Thickness, definition of, 4-1
Thrust, 1-1
Titanium, 2-8, 2-22 - 2-25, 5-3
characteristics of, 2-22
crystal structure of, 2-22
drilling of, 2-24 - 2-25
grinding of, 2-23
heat treating of, 2-25
identification of, 2-23
marking of, 2-25
sawing of, 2-25
shearing of, 2-25
working methods of, 2-23
Tolerances, 2-2, 8-6
Torque, 7-35 - 7-36
Torsion, 2-2
Toughness, 2-1 - 2-2, 2-7
Trailing edge, 1-1 - 1-2, 1-10 - 1-13
Transverse pitch, 8-13, 8-17, 8-19

Underbalance, 10-1

Vertical stabilizer, 1-11
View, 4-9, 4-13, 4-14
exploded, 4-14
isometric, 4-14
orthographic, 4-15
perspective, 4-14
photograph, 4-13 - 4-14
sectional, 4-12
Vise, general shop, 3-10

Wear resistance, 2-8
Web, 1-11, 8-29
Webster hardness tester, 2-29
Model B of, 2-30
Model B-75 of, 2-31
Model BB-75 of, 2-31
operating principles of, 2-29
special instructions for, 2-30
zero and load spring adjustments of, 2-30
Weight, 1-1, 8-2, 10-2
reduction, 10-2
Welding, resistance, 6-2
advantages of, 6-93
restrictions of, 6-89
Well, 6-14
Width, definition of, 4-1
Wing design, 1-10
Wiredraw Cherrylock rivets. *See* Rivets, wiredraw Cherrylock
Wrenches, 3-12
adjustable, 3-13
box-end, 3-12, 7-36
combination, 3-12
open-end, 3-12, 7-36
socket, 3-13, 7-36
special, 3-13

Downloaded from http://www.everyspec.com

Downloaded from http://www.everyspec.com

FM 1-563
30 SEPTEMBER 1991

By Order of the Secretary of the Army:

GORDON R. SULLIVAN
General, United States Army
Chief of Staff

Official:

PATRICIA P. HICKERSON
Brigadier General, United States Army
The Adjutant General

DISTRIBUTION:

Active Army, USAR, and ARNG: To be distributed in accordance with DA Form 12-11E, requirements for FM 1-563, Fundamentals and Procedures of Airframe Maintenance (Qty rqr block no. 3828).

☆ U.S. GOVERNMENT PRINTING OFFICE: 1991 527-027/40053

Downloaded from http://www.everyspec.com

PIN: 058188-000