Downloaded from http://www.everyspec.com

UNCLASSIFIED

## AD NUMBER

AD830284

## NEW LIMITATION CHANGE

TO

Approved for public release, distribution unlimited

FROM

Distribution authorized to U.S. Gov't. agencies and their contractors; Operational and Administrative Use; Mar 1966. Other requests shall be referred to Army Materiel Command, Alexandria, VA 22304.

## AUTHORITY

USAMC ltr, 14 Mar 1972

THIS PAGE IS UNCLASSIFIED

Downloaded from http://www.everyspec.com

AMC PAMPHLET AMCP 706-248

(THIS IS A REPRINT OF ORDP 20-248, WHICH WAS REDESIGNATED AMCP 706-248.)

AD830284

# ENGINEERING DESIGN HANDBOOK

## AMMUNITION SERIES
## SECTION 5

APR 17 1968

# INSPECTION ASPECTS OF ARTILLERY AMMUNITION DESIGN

STATEMENT #2 UNCLASSIFIED
This document is subject to special export controls and each transmittal to foreign governments or foreign nationals may be made only with prior approval of: Army Materiel Command, Attn AMCRD-TV, Washington, D.C. 20315

HEADQUARTERS, U.S. ARMY MATERIEL COMMAND MARCH 1966

30

Downloaded from http://www.everyspec.com

# BLANK PAGE

Downloaded from http://www.everyspec.com

HEADQUARTERS
UNITED STATES ARMY MATERIEL COMMAND
WASHINGTON, D. C. 20315

10 March 1966

AMCP 706-248, *Section 5, Inspection Aspects of Artillery Ammunition Design*, forming part of the Ammunition Series of the Army Materiel Command Engineering Design Handbook Series, is published for the information and guidance of all concerned.

(AMCRD)

FOR THE COMMANDER:

SELWYN D. SMITH, JR.
Major General, USA
Chief of Staff

OFFICIAL:

STANLEY J. SAWICKI
Colonel, GS
Chief, Administrative Office

DISTRIBUTION:
Special

Downloaded from http://www.everyspec.com

# PREFACE

The Engineering Design Handbook Series of the Army Materiel Command is a coordinated series of handbooks containing basic information and fundamental data useful in the design and development of Army materiel and systems. The handbooks are authoritative reference books of practical information and quantitative facts helpful in the design and development of Army materiel so that it will meet the tactical and the technical needs of the Armed Forces.

This handbook is the fifth of six handbooks on artillery ammunition and forms a part of the Engineering Design Handbook Series of the Army Materiel Command. Information concerning the other handbooks on artillery ammunition, together with the Table of Contents, Glossary and Index, will be found in AMCP 706-244, *Section 1, Artillery Ammunition--General.*

The material for this series was prepared by the Technical Writing Service of the McGraw-Hill Book Co., based on technical information and data furnished principally by Picatinny Arsenal. Final preparation for publication was accomplished by the Engineering Handbook Office of Duke University, Prime Contractor to the Army Research Office-Durham for the Engineering Design Handbook Series.

Elements of the U. S. Army Materiel Command having need for handbooks may submit requisitions or official requests directly to Publications and Reproduction Agency, Letterkenny Army Depot, Chambersburg, Pennsylvania 17201. Contractors should submit such requisitions or requests to their contracting officers.

Comments and suggestions on this handbook are welcome and should be addressed to Army Research Office-Durham, Box CM, Duke Station, Durham, North Carolina 27706.

Downloaded from http://www.everyspec.com

# TABLE OF CONTENTS

## Section 5 - Inspection Aspects of Artillery Ammunition Design


| | Page | Paragraph |
|---|---|---|
| Quality Assurance Aspects of Ammunition Design | 5-1 | |
| Quality Assurance | 5-1 | 5-1 |
| Amount of Inspection | 5-1 | 5-2 |
| Definition of Lots | 5-1 | 5-3 |
| Sampling Risks | | 5-4 |
| Operating Characteristic Curve | 2 | 5-5 |
| The Average Outgoing Quality (AOQ) | 5-3 | 5-6 |
| Establishing the Acceptable Quality Level (AQL) | 5-4 | 5-7 |
| Classification of Defects | 5-5 | 5-8 |
| Inspection by Attributes | 5-5 | 5-9 |
| Single-Sampling | 5-5 | 5-10 |
| Double-Sampling | 5-5 | 5-11 |
| Multiple-Sampling | 5-6 | 5-12 |
| OC Curves for Comparable Single-, Double-, and Multiple-Sampling Plans | 5-6 | 5-13 |
| Relationship of Sample Size to Lot Size | 5-6 | 5-14 |
| Acceptable Quality Level as Basis for Inspection | 5-8 | 5-15 |
| Resubmission and Retest | 5-10 | 5-16 |
| Continuous-Sampling Plans | 5-10 | 5-17 |
| Statistical Aspect of Parallel Design | 5-11 | 5-18 |
| Relationship Between Sampling Plan, Tolerance Limits, and Safety Factor | 5-11 | 5-19 |
| Sampling Plans Based on Variables | 5-12 | 5-20 |
| Variables Inspection Compared with Attribute Inspection | 5-12 | 5-21 |
| References and Bibliography | 5-12 | |
| Effect of Dimensioning and Tolerancing on Inspection | 5-13 | |
| Introduction | 5-13 | 5-22 |
| Locational Tolerance Symbols | 5-13 | 5-23 |
| Independent Locational Tolerance | 5-13 | 5-24 |
| Dependent Locational Tolerance | 5-15 | 5-25 |
| Centrality of Holes | 5-22 | 5-26 |
| Basic Angle Dimensioning | 5-23 | 5-27 |
| Effect of Gage Tolerance on Component Tolerance | 5-24 | 5-28 |

Downloaded from http://www.everyspec.com

SECTION 5

# INSPECTION ASPECTS OF ARTILLERY AMMUNITION DESIGN

## QUALITY ASSURANCE ASPECTS OF AMMUNITION DESIGN

5-1. Quality Assurance. It is necessary not only to state the dimensions to which an item must be produced, and the nature and properties of the materials of which the item must be made, but also to state methods for determining whether these requirements have been met to an extent which will be satisfactory to the Government.

The term "quality assurance" embraces the techniques used in the determination of the acceptability of products. These techniques include:

1. Establishment of homogeneity criteria (lot definition)
2. Establishment of acceptance criteria (inspection plans, sampling plans)
3. Determination of methods of inspection (gaging, testing, visual inspection)
4. Classification of defects.

The specification provisions for quality assurance must be formulated with care in order that maximum assurance of satisfactory quality may be obtained at the minimum cost that is consistent with the requirements of safety and efficiency of the end item. Incorrect classification of defects, unrealistic or ambiguous acceptance criteria, incomplete analysis of quality desired, and wrong methods of inspection may result in unreliable, costly, or hazardous ammunition, and render difficult the satisfactory fulfillment of a contract.

5-2. Amount of Inspection. The design engineer, unfamiliar with the practical aspects of inspection, may reach the conclusion that in order to obtain materiel of satisfactory quality, acceptance must be based on 100 percent inspection for every defect which is likely to occur. Actually, this is not the case, unless it is essential that there be no defective pieces accepted. Four factors militate against the performance of 100 percent acceptance inspection of Ordnance materiel.

a. The cost of 100 percent inspection (or "screening") of all materiel would be prohibitive, unless suitable automatic machines of proven reliability are available.

b. Because of the extent of human fatigue associated with the inspection of large lots, 100 percent inspection by other than automatic machines is seldom 100 percent effective.

c. The contractor would tend to rely on the Ordnance inspection to screen out defectives, and would fail to inspect his product adequately; yet, inspection, is properly his own responsibility.

d. When inspection testing is destructive, 100 percent inspection obviously is impossible.

In most cases, adequate quality control may be obtained by a lot-by-lot sampling inspection; that is, a predetermined number of units of the product are selected from a lot in such a manner that the quality of the sample will represent as accurately as possible the quality of the lot. Normally, every effort should be made to select a sample consisting of units of product selected at random from the lot.

5-3. Definition of Lots. A lot is an aggregation of objects that are essentially of the same kind, size, form, and composition.

A homogeneous lot is one in which the units of product are so thoroughly mixed that all portions of the lot are essentially alike. A lot may be homogeneous, but the units of which it is composed may not be identical. For example, a lot produced on an automatic machine may be homogeneous, but not all the units will be identical. On the other hand, the ingots poured from one heat of steel may be considered identical in their chemical composition.

Downloaded from http://www.everyspec.com

Homogeneity of lot and randomness of sample are closely related. If a lot of units is thoroughly mixed, that is, homogeneous, each unit has an equal chance of being located in a certain part of the lot. By randomness of sample is meant the selection of sample units in such a manner that each unit of the lot has an equal chance of being selected. It follows, therefore, that any sample drawn from a homogeneous lot is equivalent to a random sample drawn from a heterogeneous lot.

The purpose of restricting lot size in the specification is to assure homogeneity or uniformity by controlling the material which goes into the product, and the conditions under which the product is produced. However, if all variables which may make for some degree of nonuniformity are strictly controlled, the resulting lot may be so small that the cost of inspection, subsequent handling, and use is disproportionately high. It follows, then, that only the major sources of variation, with respect to the specific product requirements, ought to be controlled.

In practice, it is often difficult, if not impossible, to select perfectly random samples. For example, if a lot of 20,000 components is offered for inspection on trays containing 100 components in each tray, for practical reasons it may be necessary to treat each tray as a sublot, and select one sample unit drawn at random from each tray. Thus, the lack of complete assurance of homogeneity (a result of controlling only major sources of variation) is counterbalanced by partial randomness of sampling.

5-4. Sampling Risks. In any form of acceptance sampling, there is the inherent risk that a lot of acceptable quality will be rejected, while a lot of rejectable quality will be accepted. Fundamentally, there are three criteria by which a sampling plan should be judged to ensure that the plan selected is the correct one to use. These criteria are:

a. How the plan will operate with respect to lots of acceptable quality;

b. How it will operate on lots which should be rejected;

c. How it will affect the cost of inspection.

The first two criteria may be determined by calculations involving the probabilities of acceptance. In general, the risks of making a wrong decision, that is, accepting a bad lot or rejecting a good lot, may be reduced by increasing the sample size. However, in so doing, the costs of inspection are increased.

5-5. Operating Characteristic Curve. Four important curves tell how any specific sampling plan operates with respect to lots that are defective in various percentages. Of these, the operating characteristic (OC) curve is the most important because it gives an adequate picture of the plan's severity and discriminatory power. It pictures the probability of acceptance $P_a$ for lots of various qualities, p' percent defective. The exact probability of finding d defectives in a sample of n pieces drawn from a lot of N pieces containing D defects is determined by the hypergeometric distribution, and is given by the formula

$$P_d = \frac{{}_{N-D}C_{n-d} \cdot {}_{D}C_{d}}{{}_{N}C_{n}}$$

The first factor of the numerator is the number of ways in which (n − d) good pieces may be drawn from (N − D) good pieces in the lot, and the second factor is the number of ways in which d defectives may be drawn from D defectives in the lot. The denominator is the number of ways in which n pieces in the sample may be drawn from N pieces in the lot.

The use of this hypergeometric formula is tedious. For example, in a sampling plan where n = 150, and c (the acceptance number) = 4 defectives, applied to a lot of N = 3,000 pieces of p' = 1 percent defective, gives a probability of acceptance

$$P_a = \frac{{}_{2970}C_{150}}{{}_{3000}C_{150}} + \frac{{}_{2970}C_{149} \cdot {}_{30}C_{1}}{{}_{3000}C_{150}} + \ldots + \frac{{}_{2970}C_{146} \cdot {}_{30}C_{4}}{{}_{3000}C_{150}} \qquad (1)$$

Where $n \leq 0.1N$, the binomial approximation to the hypergeometric distribution may be used. Thus, for the above plan

$$P_a = {}_{150}C_{0}(0.99)^{150} + {}_{150}C_{1}(0.99)^{149}(0.01) + \ldots + {}_{150}C_{4}(0.99)^{146}(0.01)^{4} \qquad (2)$$

However, this is still a somewhat complicated calculation, unless a set of "Tables of the Bi-

Downloaded from http://www.everyspec.com

nomial Probability Distribution" is available. Whenever $n \leq 0.1N$ and $\geq 20$ and $p' \leq 5$ percent, use is made of the Poisson distribution, which may be used as a distribution in its own right, or as a good approximation of the binomial.

Using the Poisson distribution, the probability of acceptance is given by

$$P_a = e^{-1.5} + e^{-1.5}1.5 + e^{-1.5}1.5^2/2 + e^{-1.5}1.5^3/6 + e^{-1.5}1.5^4/24$$

This is much easier to calculate. Also, tables of probabilities of acceptance for various values of $np'$ are to be found in any standard text on quality control. (The tables use $p'$ as the fraction defective.)

It should be noted that the hypergeometric and binomial probabilities are based on a fixed lot size, while use of the Poisson distribution assumes an infinite lot size. Since in most applications in Ordnance the actual size of the lot is indeterminate at the time the sampling plan is developed, the Poisson is nearly always used. For further study, reference is made to "Statistical Quality Control" by Grant or "Engineering Statistics and Quality Control" by Burr.

The OC curve is a plot of percent defective versus probability of acceptance for a given sample of n size and acceptance number of c defectives. Thus, for any given percent defective (normally the abscissa), the probability that a lot of this quality will be accepted may be found. Figure 5-1 is a plot of a typical OC curve.

Terms frequently used to indicate the characteristics of a plan, or used as an index to a series of plans, can best be indicated by reference to the OC curve. The term used most often is Acceptance Quality Level (AQL). The AQL represents that quality, expressed in terms of percent defective, which is considered acceptable and which will be accepted most of the time. The probability of not accepting material of this level of quality is called the producer's risk ($\alpha$). In standard practice it is customary to base the AQL on a probability of acceptance of 95 percent, with a producer's risk of rejection of 5 percent. However, these figures are

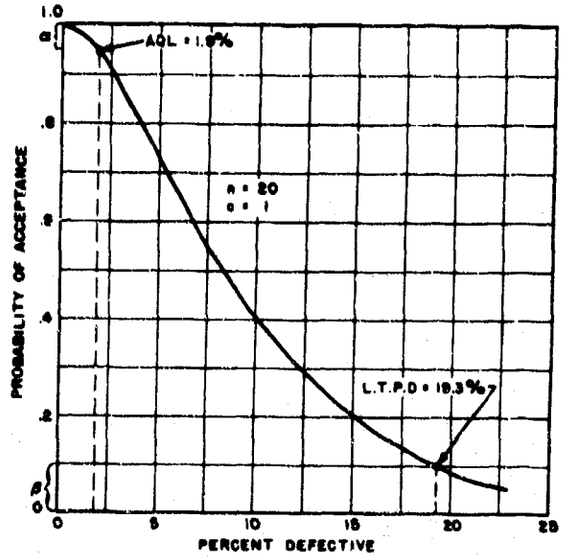


*Figure 5-1. Typical Operating Characteristic (OC) curve*

purely arbitrary. Plans outlined in MIL-STD-105A are based on acceptance of AQL product of quality from 88 percent to 99 percent of the time, with corresponding producer's risks of 12 percent and 1 percent.

On the other hand, the Lot Tolerance Percent Defective (LTPD) is the quality, expressed in terms of percent defective, that is considered unacceptable and which will be rejected most of the time. The consumer's risk ($\beta$) is the probability of accepting material LTPD quality. In practice, $\beta$ usually is given a value of 0.1, or 10 percent, but other values may be given if considered desirable.

The discriminatory power of a plan cannot be determined merely by knowing the AQL. The proximity of the AQL and LTPD of a plan indicates its ability to distinguish between good and bad quality. This is reflected by a steep OC curve. A tight AQL may not offer sufficient protection if the LTPD is poor.

5-6. The Average Outgoing Quality (AOQ) is the average quality of a succession of lots which have been accepted. If the rejected lots are not resubmitted for inspection, then, disregarding the removal of defectives found in the samples, the average quality of the lots accepted is the same as the quality of the lots

Downloaded from http://www.everyspec.com

submitted. For example, if 1,000 lots of a quality 6 percent defective are submitted, then under the sampling plan indicated by the OC curve in figure 5-1, 620 lots will be accepted; their average quality will be 6 percent defective. If from the OC curve a curve of AOQ values is plotted, it will be found to be a straight line, for the average outgoing (accepted) quality is always equal to the average incoming (submitted) quality. This is true in the case of destructive testing when rejected lots are scrapped.

However, when rejected lots are screened 100 percent and resubmitted for inspection, the AOQ of the accepted lots will be better than the average incoming quality. For example, if 1,000 lots of a quality 6 percent defective are inspected under the plan indicated in figure 5-1, 620 lots will be accepted and 380 lots rejected. After the rejected lots are screened and finally accepted, the quality of these lots will be 0 percent defective. The AOQ for the total lots will then be

$$\frac{620 \times 6 + 380 \times 0}{1000} = 3.72 \text{ percent}$$

which is better than the incoming (submitted) quality.

If from the OC curve (figure 5-1) the AOQ values for the range of qualities are computed and plotted, the AOQ curve will be similar to that shown in figure 5-2. It will be noted that there is a maximum value known as the Average Outgoing Quality Limit (AOQL), which is the

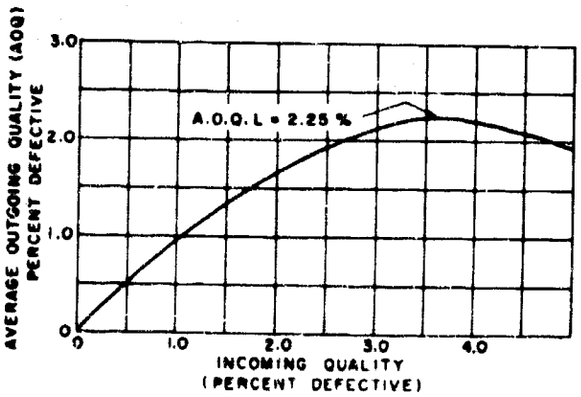


*Figure 5-2. Typical curve of Average Outgoing Quality (AOQ)*

poorest average quality that the plan will accept. Obviously, the quality of the accepted or outgoing lots can never be worse than that of the incoming or submitted lots.

5-7. Establishing the Acceptable Quality Level (AQL). The ideal goal of procurement is to accept only perfect materiel. However, several factors involved in the attainment of such perfection make it necessary that something less than perfection be accepted. First of all, if a manufacturer were forced to submit perfect materiel at all times, his manufacturing costs would be very high, and the resultant cost would be high. Secondly, to be assured of buying only perfect materiel, 100 percent inspection on all lots submitted for acceptance would have to be made. This would make the cost of inspection prohibitive. To maintain manufacturing expense and cost of inspection at a reasonable level, less than perfect materiel must be accepted. The question then arises: at what point will the combined cost of inspection and manufacture be reasonable, while still primarily assuring the acceptance of good materiel? This question should be answered whenever an AQL is set. The AQL may not be the perfect answer in all cases, however, because of the numerous factors which must be taken into account when establishing an AQL.

In establishing an AQL the most important consideration is the seriousness of the defect. The degree of compromise made with respect to the quality considered acceptable is completely dependent upon this factor. Systems of classifying defects assist in permitting defects of similar natures to be treated alike.

One of the factors to be considered when establishing an AQL is the degree of manufacturing difficulty associated with the item. Cost is indirectly involved in this consideration, as costs increase with greater manufacturing difficulty. To determine the degree of manufacturing difficulty for a particular item, any knowledge of actual experience with the item should be put to use. For purposes of setting the AQL in those cases where no data exists, the degree of manufacturing difficulty is associated with the number of defects listed under one classification. It is obviously more difficult to control five characteristics than one; therefore the AQL would be less stringent for five than for one. Assuming the defects are independent of each

Downloaded from http://www.everyspec.com

other, as the number of defects listed under one classification increases, the probability that all of them will occur with the same frequency decreases.

When setting an AQL for a component part it is important to view the item as a whole, in order that the importance of different features can be seen in proper perspective. For example, consider the case of a squib that is to be a component of a rocket. The AQL for the functioning test of the rocket is determined to be 2.5 percent. This means that the AQL must be more stringent for the functioning test of the igniter (1.5 percent) and still more stringent for the functioning test of the squib (0.65 percent). This must be done in order to avoid penalizing the manufacturer of the igniter (the functioning of which depends on the squib) and the manufacturer of the rocket (the functioning of which depends on the squib and the igniter). However, if it is known that the same squib is to be used in a JATO unit, for which the functioning test has an AQL of 0.25 percent, the AQL for the squib in this case should be about 0.10 percent. Obviously, the same squib cannot have two AQL's; therefore, the squib intended for the rocket also must have an AQL of 0.10 percent, unless a method of grading squibs can be devised. In all cases the component should be given the most stringent AQL required for any use.

5-8. Classification of Defects. Defects of similar importance are treated alike. To accomplish this it is necessary to classify them into groups, the number of which is a compromise between the degree of selectivity desired and the administrative complexity. The following excerpts taken from MIL-STD-105 reflect the prevalent classes and definitions for the classes.

a. Method of Classifying Defects. A classification of defects is the enumeration of possible defects of the unit of product classified according to their importance. A defect is a deviation of the unit of product from requirements of the specifications, drawings, purchase descriptions, and any changes thereto in the contract or order. Defects are normally grouped into one or more of the following classes; however, the Government reserves the right to group defects into other classes.

b. Critical Defects. A critical defect is one that judgment and experience indicate could result in hazardous or unsafe conditions for individuals using or maintaining the product; or, for major end-item units of product, such as ships, aircraft, or tanks, a defect that could prevent performance of their tactical function.

c. Major Defects. A major defect is a defect, other than critical, that could result in failure, or materially reduce the usability of the unit of product for its intended purpose.

d. Minor Defects. A minor defect is one that does not materially reduce the usability of the unit of product for its intended purpose, or is a departure from established standards having no significant bearing on the effective use or operation of the unit.

5-9. Inspection by Attributes is the grading of a unit of product as defective or nondefective, with respect to a given requirement, by sampling inspection. When attributes inspection is performed, the decision to accept or reject is based on the number of sample units found defective. The extent of deviation from the requirement is not considered in this form of inspection. This form is simple to administrate, normally is simple and rapid to perform, is not dependent upon a particular distribution of product to provide a desired assurance, and involves no mathematics to determine lot acceptability. It is always possible to use attributes inspection, and in many instances, such as in GO and NOT GO gaging, it is the only type possible.

5-10. Single-Sampling is a technique in which only one sample of n items is inspected to reach a decision on the disposition of the lot. A sampling plan is best described by the sample size (n) and acceptance number (c). When the number of defectives found in this sample equals, or is less than, the acceptance number prescribed by the sampling plan, the lot is accepted. If the number of defectives exceeds the acceptance number, the lot is rejected. An example of a single plan is as follows. Select a sample of 100 units. If 3 or fewer defectives are found, accept the lot; if more than 3 are found, reject the lot.

Single plans may be summarized as follows:

| Sample size | Acceptance no. | Rejection no. |
|---|---|---|
| 100 | 3 | 4 |

5-11. Double-Sampling is a technique in which a second sample of n items is inspected when

Downloaded from http://www.everyspec.com

the results of the first sampling do not accept or reject the lot. Depending on what is found in the first sample, there are three possible courses of action. The lot may be accepted, it may be rejected, or the decision may be deferred until the results of a second sampling are obtained. A decision is sure to be made on the basis of a second sample, inasmuch as the rejection number of a second sample is one more than the acceptance number.

An example of a double plan is as follows. A sample of 75 units is selected. If the sample contains 4 or fewer defectives, the lot is accepted. If the sample contains 9 or more defectives, the lot is rejected. If more than 4 defectives, but fewer than 9, are found, a second sample of 150 units is selected and inspected. If in the combined sample of 255 units fewer than 9 defectives are found, the lot is accepted; but if 9 or more defectives are found, the lot is rejected. Double-sampling plans are summarized as follows:

| Cumulative sample | Acceptance no. | Rejection no. |
|---|---|---|
| 75 | 4 | 9 |
| 225 | 8 | 9 |

5-12. Multiple-Sampling is a procedure in which a final decision to accept or reject the specific lot need not be made after one or two samples, but may require the drawing of several samples. An example of a multiple-sampling plan is as follows:

| Cumulative sample | Acceptance no. | Rejection no. |
|---|---|---|
| 30 | 2 | 8 |
| 60 | 8 | 13 |
| 90 | 12 | 18 |
| 120 | 17 | 22 |
| 150 | 21 | 27 |
| 180 | 27 | 32 |
| 210 | 35 | 36 |

The inspector selects a sample of 30 from a lot of 4,000 items. If the first sample contains 2 or fewer defectives, the lot is accepted; if 8 or more defectives appear in the sample, the lot is rejected. If more than 2 but fewer than 8 defectives appear in the sample, the inspector draws a second sample of 30 items. If, in the total sample of 60 units, 8 or fewer defectives are found, the lot is accepted. If 13 or more defectives are found, then the lot is rejected. If more than 8 but fewer than 13 defectives are found, a third sample of 30 is inspected. This process is continued, until a decision is reached, which in this case will be not later than the seventh sample.

It is a common misconception that a comparable double- or multiple-sampling plan is less stringent than a single plan. This is not true, since the acceptance and rejection numbers are selected to make them equivalent. The OC curves for equivalent single, double, and multiple plans are shown in figure 5-3.

5-13. OC Curves for Comparable Single-, Double-, and Multiple-Sampling Plans. It will be noted that the OC curves of the three plans almost coincide, showing little difference in their severity and discriminatory power. However, there is a great difference among the plans in the average number of pieces per lot that will be inspected before a decision is reached. Figure 5-4 shows the ASN (Average Sample Number) curves for the same plans.

In the single-sampling plan the sample is always completely inspected, regardless of a possible earlier decision. The ASN curve for the single-sampling plan is, therefore, a straight line.

In the double-sampling plan the first sample is completely inspected, but inspection of the second sample ceases as soon as the number of defectives found in the combined samples equals the rejection number. Since lots of very good quality will be accepted, and lots of very bad quality will be rejected on the first sample, and inspection of the second sample is curtailed, the average amount of inspection will be less for a double-sampling plan than for a single-sampling plan. As will be seen, multiple-sampling reduces still further the amount of inspection.

5-14. Relationship of Sample Size to Lot Size. The sample size is of considerably more significance, with respect to severity and discriminating power, than the lot size from which it is taken. Figure 5-5 is composed of OC curves, all having the same sample size and acceptance numbers, but different lot sizes.

Downloaded from http://www.everyspec.com

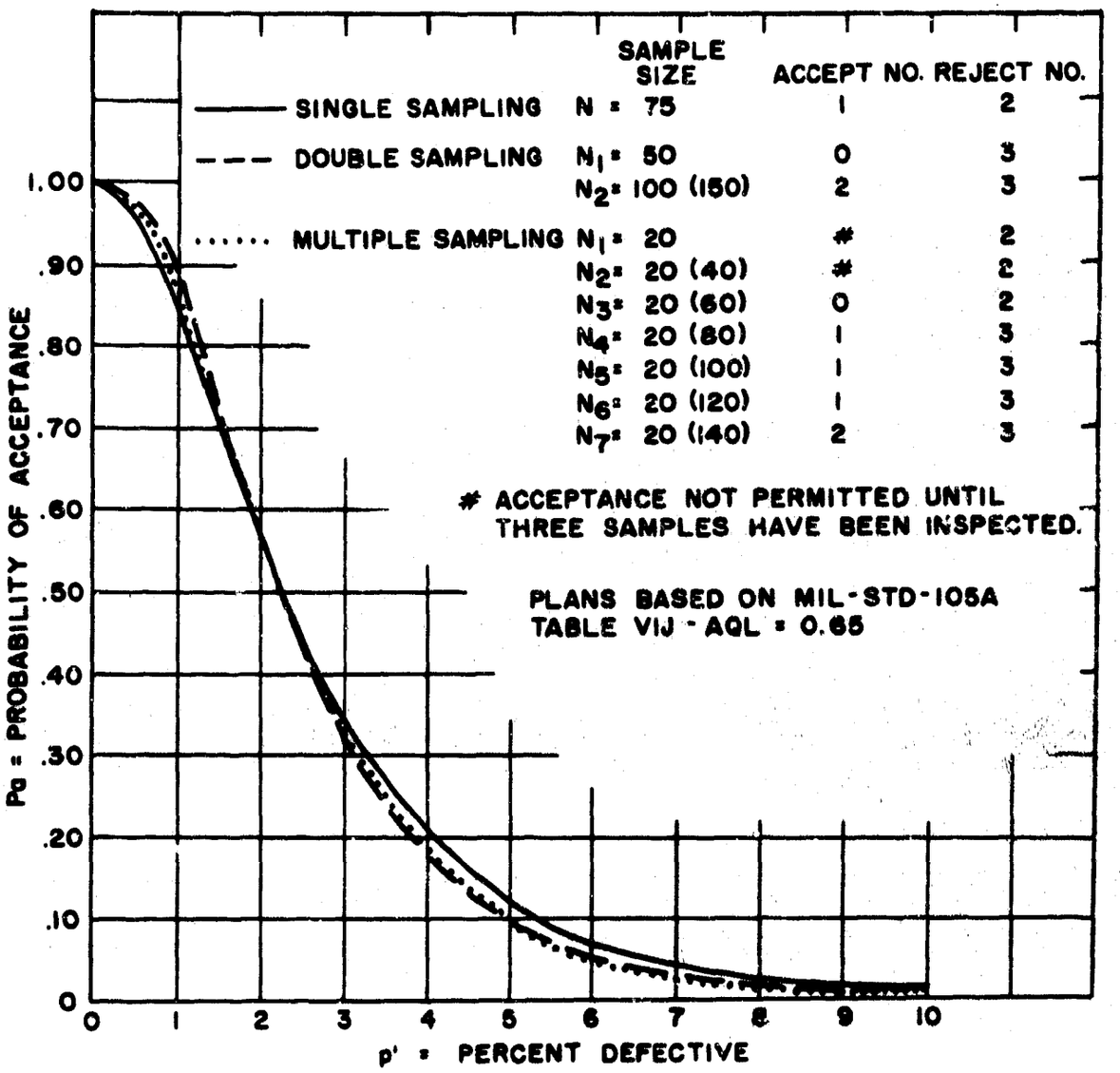


*Figure 5-3. Operating Characteristic (OC) curves for single-, double-, and multiple-sampling plans*

It is readily observed that the OC curves for lot sizes of 1,000 and over are virtually equivalent to that for a lot size of infinity. Thus it is often said that the lot size has almost no effect on the sampling plan. This statement holds, provided the sample size is a small fraction of the lot size (normally less than 10 percent). Figures 5-6 and 5-7 demonstrate the effect of varying sample size for finite and infinite lot size, respectively.

Although percent sampling appears logical from a cost or time aspect, it is decidedly not so with respect to the degree of protection offered. The absolute size of the sample, it has been noted, affects the characteristics of a plan more significantly than the lot size. A proportional change in both the sample and lot size, therefore, will result in different degrees of protection. Figure 5-8 is an illustration of this phenomenon.

Downloaded from http://www.everyspec.com

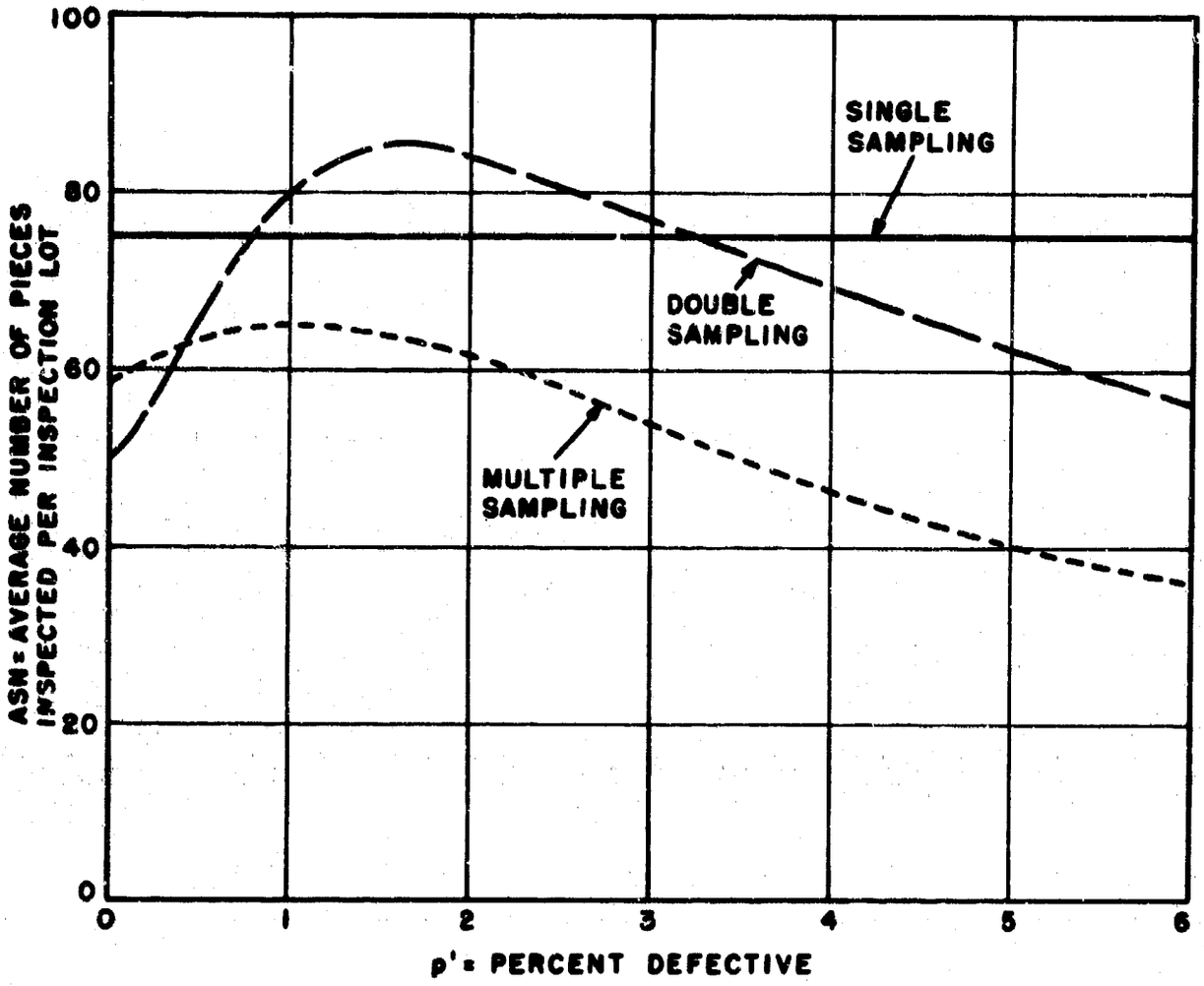


*Figure 5-4. Average Sample Number (ASN) curves for plans shown in figure 5-3*

The effect of varying the sample size can be observed by noting figures 5-6 and 5-7. Obviously the greater the sample size, the more stringent and more discriminating will the plan be for a fixed acceptance number. Similarly, for a fixed sample size, the severity of the plan increases as the acceptance number decreases (figure 5-9).

5-15. Acceptable Quality Level as Basis for Inspection. Usually, the effect of a sampling plan for acceptance inspection is to force manufacturers to supply materiel of such good quality that only a very small proportion of the lots is rejected. The manufacturer, when given the AQL, knows the major piece of information pertaining to the sampling plans, which will affect the disposition of his lots. The manufacturer will know that by submitting products as good as, or better than, the AQL, rejections can be kept to an absolute minimum. If the manufacturer produces worse than AQL level, many inspection lots will be rejected, with increased costs necessary to screen or to scrap the lots. On the other hand, a production quality level better than the AQL may involve higher production costs than are necessary. The knowledge of the AQL level will enable the producer to manufacture most efficiently.

If some point other than the AQL is set as a basis for inspection, the acceptable quality level will differ among manufacturers, depending on the particular sampling plan used.

Downloaded from http://www.everyspec.com

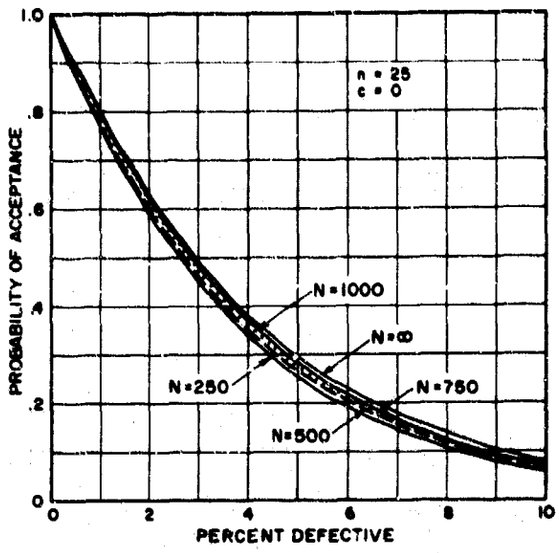


*Figure 5-5. Effect of lot size on sampling plan*

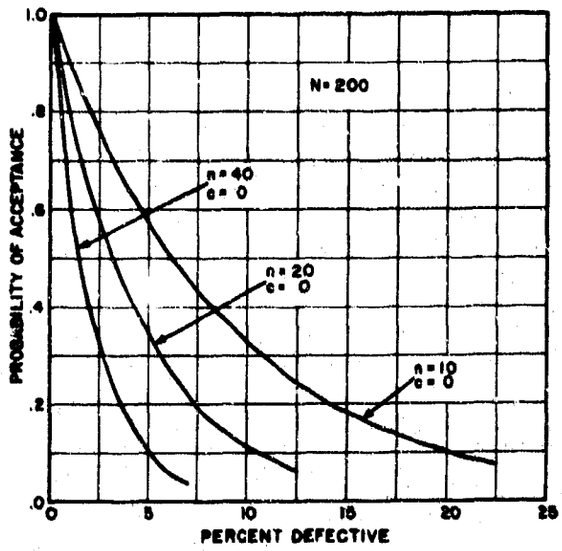


*Figure 5-6. Effect of sample size with fixed acceptance number and finite lot size*

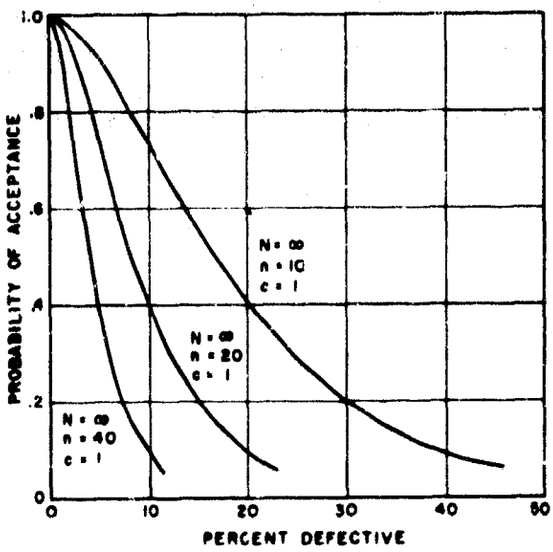


*Figure 5-7. Effect of sample size with fixed acceptance number and infinite lot size*

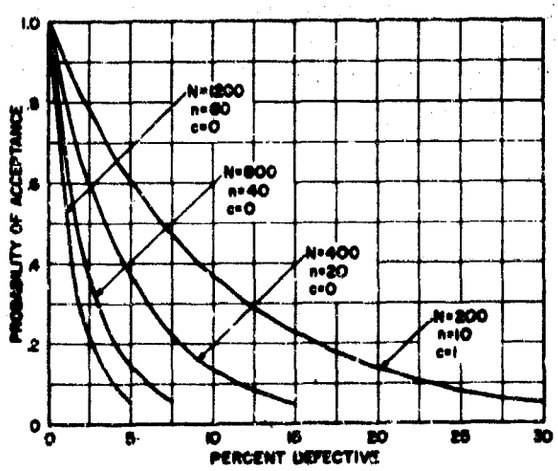


*Figure 5-8. Fallacy of sample size based on fixed ratio to lot size*

Downloaded from http://www.everyspec.com

Certain situations may arise where high assurances of achieving specific reliabilities are desired. In such cases, the utilization of some level, other than the AQL, would be necessary to achieve such desired protection. Thus if 95 percent assurance of achieving a reliability of 99 percent were desired, it would be similar to a probability of 5 percent of accepting lots 1 percent or more defective. This point would then be the basis for inspection.

5-16. Resubmission and Retest. The distinction between resubmission and retest is frequently lost in applying sampling procedures. It is true that both resubmission and retest require additional inspection, but the similarity ends there. A retest is essentially a double- (or multiple-) sampling procedure. It acknowledges the fact that the first sample is not large enough to distinguish adequately between acceptable and nonacceptable materiel in borderline cases. When materiel is subjected to a retest, it should not have been altered in any way prior to retest. The materiel subjected to retest has not yet been rejected or accepted. The risks involved in the case of retest are those of a specific plan and are, therefore, clearly defined.

Resubmission, on the other hand, is a procedure for reinspecting materiel that has previously been rejected. It implies (and the procedures for resubmission should require) some procedure for removing the defective portions of the lot or reworking the lot. To prevent the resubmission of nonscreened or nonreworked materiel, the acceptance criteria for a resubmitted lot should be more stringent than those applied when the lot was originally submitted.

5-17. Continuous-Sampling Plans. It has become evident that where production is continuous, as in conveyor lines, the formation of inspection lots for lot-by-lot acceptance is somewhat artificial, and may be impracticable or unduly costly. Some other plan of inspection, therefore, is necessary for this type of production.

Continuous-sampling has been developed to fill this need. Continuous-sampling dispenses with the notion of the lot as a static entity, and considers instead a continuous flow of the product. The essence of most continuous-sampling plans is the qualifying of the product for sampling

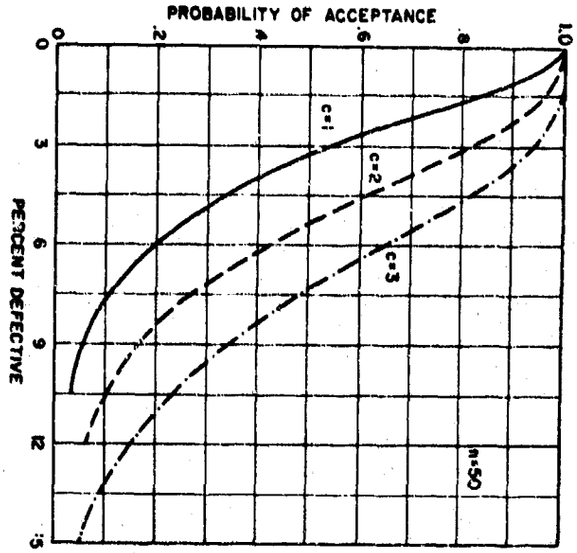


*Figure 5-9. Effect of acceptance number with fixed sample size*

inspection by inspecting a large number of consecutive units of the product as produced, and then the sampling of the product that is qualified.

One of the major virtues of many of these plans is that products which have passed the inspection station are accepted, and are free of reinspection. This type of plan attempts to assure that the average outgoing quality will not exceed a specified limit where the process is in control.

It is recognized that in some continuous-sampling plans, questions arise as to the quality of the product between the time that a defect is detected and the last preceeding sample. However, one of the assumptions of many of these plans is that in the long run, the quality will be no worse than quality specified by the plan.

Such inspection schemes are advantageous to the manufacturer because he does not risk having large quantities rejected, does not need storage facilities for static lots or rejected materiel, and does not have to tie up his production lines for reinspection and reprocessing. Such plans also work to the consumer's advantage, because they result in lower cost.

Downloaded from http://www.everyspec.com

There are certain disadvantages to the consumer associated with continuous-sampling. One is that many of these sampling schemes do not impose a penalty upon the manufacturer for poor quality. Since no penalty is imposed, there is little or no incentive to precontrol the quality of product. The only added burden in this respect is to increase the number and/or length of qualifying periods. A second disadvantage is that unless the frequency of sampling is more than 2 percent of the production, there is little or no chance of detecting spotty quality. This is particularly important where significant defects are concerned.

5-18. Statistical Aspect of Parallel Design. Parallel design is a term applied to a situation where more than one route or train is provided from initiation to result.

Initiation ——— Result
conventional design

Initiation ═══ Result
Parallel design (three trains)

Because in conventional design, functioning of the item is dependent on only one train from the point of initiation to the result, the overall reliability of the item is limited by the functional quality of each of the various elements comprising the train. These limitations, concerned with quality of functioning, are occasioned by failure to achieve perfection in the design, manufacture, and inspection of the component. Since perfection is unobtainable, and costly to approach, there is an obvious limitation on the extent to which reliability of the end item can be improved through increasing the quality of the components. In cases where exceptionally high assurance of functioning or safety is desired, a parallel design may be the only economical way to achieve these. If we have an item with two trains in parallel, the probability of the item's not functioning is squared, as compared with the probability of not functioning for a conventional design. With three trains in parallel, the probability is cubed, and so on. Thus, a parallel design permits considerable saving in cost of production and inspection. In cases where this saving outweighs the cost of duplicating certain aspects of the design, the use of a parallel design ought to be considered. The following are examples which illustrate the advantages.

a. If in a lot of 1,000 conventionally designed items we desire an assurance of 0.99 of rejecting lots with a fraction defective greater than 0.002, it is necessary to inspect a sample of 900. If two trains in parallel are used, it is possible to maintain the same level by inspecting a sample of 140.

b. If we desire a fraction defective less than 0.0001 in the end item, it may be obtained by the use of two trains in parallel, each train having a fraction defective of less than 0.010.

5-19. Relationship Between Sampling Plan, Tolerance Limits, and Safety Factor. (See figure 5-10.) In the case of primary requirements, which define the physical shape or composition of an item, the sampling procedures can, if necessary, be established to require a level of quality higher than that being currently attained in production. The decision in this case is an economic one, as setting of such standards may force the producer to screen his product, or to develop a different method of production. One must determine whether the cost of this action is overbalanced by the value of the result obtained. However, in the case of a secondary requirement the results obtained measure not only the effectiveness of the producer, but also the effectiveness of the designer. Most functional requirements have this property, and considerable care should be taken when determining both the design and acceptance parameters that the producer is not required to meet functional requirements which have little correlation with the primary requirements, or vice versa. The best approach to this problem is to obtain data from the functioning test, analyze the data statistically, develop tolerance

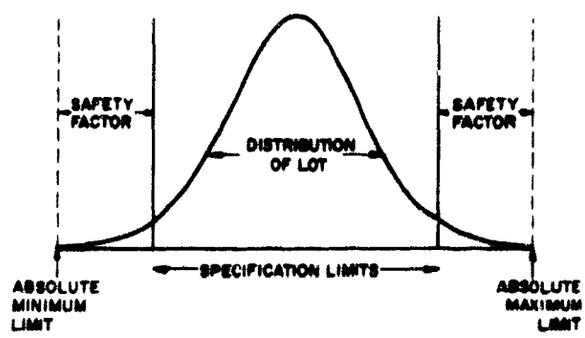


*Figure 5-10. Relationship of sampling plan, tolerance limits, and safety factor*

Downloaded from http://www.everyspec.com

limits within which lie a certain percentage of the distribution, determine whether such limits are suitable from a functioning standpoint, and, if so, develop acceptance sampling procedures based on the same distribution percentages and risks as were used to estimate the tolerance limits.

If a safety factor is incorporated in the specified limits, the test becomes one of increased severity, and the point of test is not the real point of interest. The problem of developing the acceptance requirement in this case is that of determining the reliability and confidence needed at the specified limit in order to guarantee the reliability and confidence desired at the point of interest (specified limit minus safety factor). Data is necessary for resolution of this problem, for it is necessary to know the distance between the specified limit and the limit of interest, in terms of certain parameters of the estimated distribution.

5-20. Sampling Plans Based on Variables. Inspection by variables simply requires each item in the sample to be measured and the reading recorded. Thus, the exact size of characteristic is known, and how much variation occurs from sample unit to sample unit is also known. It can also be determined how much each measurement varies from the specified limits. After the readings are obtained, measures of the average and dispersion are computed. To determine the acceptability of each lot, the average and a multiple of the measure of dispersion are compared with the specified design limits. Since most production processes are normal distribution, or nearly so, one can determine fairly accurately what percentage of the units in the lot will exceed any given limit.

5-21. Variables Inspection Compared with Attribute Inspection. In attribute inspection each item is measured, and classified as either good or bad. Often this measure may be the GO, NOT GO type of check. No consideration is given to items just outside the limits, or to the extent of variation from item to item. Thus, one advantage of this method is the ease and simplicity of checking each attribute. Little skill is necessary, and no calculations are required.

However, sampling by variables requires the actual measurement of each item, and the mathematical computation of measures of central tendency and of dispersion. The most commonly used measures of central tendency and of dispersion are the mean (arithmetical average) and the standard deviation. This gives valuable information about the items under consideration. It is not necessary to inspect as many items under the variables plan in order to obtain the same assurance of accepting only good lots. If the item requires a great deal of labor to inspect it, or if it is damaged during inspection, the variables plan would be preferred.

Certain limitations exist for variables inspection. The distribution must be normal or nearly normal. If it is abnormal, the actual characteristics of the sampling plan will differ from those upon which the plan was based, and may result in unnecessary acceptance of materiel of inferior quality or rejection of an acceptable product. If screening has previously been performed, some lots of acceptable quality will be rejected by the variables inspection plan. The reason for this is that in screening a small fraction of the distribution has been removed, but the procedure for determining acceptance is based on the assumption of normality and cannot recognize the effect of the screening operation.

## REFERENCES AND BIBLIOGRAPHY

1. Grant, "Statistical Quality Control."

2. Burr, "Engineering Statistics and Quality Control."

Downloaded from http://www.everyspec.com

## EFFECT OF DIMENSIONING AND TOLERANCING ON INSPECTION

5-22. Introduction. When an Ordnance item leaves the design and engineering phases and goes into production, dimensional control is exercised by inspectors who determine, by gaging and, when necessary, measurement, that the items and components conform dimensionally to the requirements specified by the design engineer. The dimensioning and tolerancing of an item impose difficulties on production and inspection, unless presented in a proper manner.

Department of Ordnance Drawing 30-1-7, "Standard for Dimensioning and Tolerancing," has been established as a standard for dimensioning and tolerancing of ammunition items, and the design engineer should understand thoroughly the methods outlined therein and their practical application, in order that difficulties may be avoided in the production and inspection stages. The application of an incorrect symbol or requirement may result in the manufacture of a component that is not what the designer intended, but which the inspector must accept, since it complies with the drawing.

The definition of dimensioning terms is clearly stated on page 2 of Drawing 30-1-7. The engineer should bear in mind that a basic dimension, although exercising control, is not checked directly by the inspector. A reference dimension, being informative only, is not a control dimension, and is not checked by the inspector. Generally speaking, only toleranced and datum dimensions are checked by the inspector.

5-23. Locational Tolerance Symbols. There are two classes of locational tolerance symbols permitted, independent and dependent, and the difference between them is of great importance.

5-24. An Independent Locational Tolerance is a fixed tolerance to which the manufacturer must adhere, whether the part produced is of maximum permitted size or minimum permitted size. (See paragraph 5-25, on dependent locational tolerances, for comparison.) Independent locational tolerance requirements are specifically checked by the inspector independently of other requirements, normally by the use of dial indicating gages. The application of the various symbols, and the implications of their use, should be thoroughly understood.

The use of the datum surface symbol [ - P - ] in conjunction with the tolerancing symbols, must be carefully studied to assure that what is specified on the drawing is in fact the requirement which is needed. Examples of the requirements and use of the symbols follow.

The concentricity symbol [ ⊙Pxxx ] indicates that the surface to which it is applied, if made perfectly, will have a common centerline with the datum surface. Concentricity must not be confused with ovality (out-of-roundness), which is controlled by the diametral tolerance on each surface. Example: the drawing of the illustrative piece shown on page 7 of Drawing 30-1-7 is reproduced here in figure 5-11. The two conditions which may prevail (ovality and eccentricity) are shown in figure 5-12. The illustration in figure 5-12a shows concentricity, but maximum permitted ovality; while figure 5-12b shows maximum permitted eccentricity, but perfect roundness.

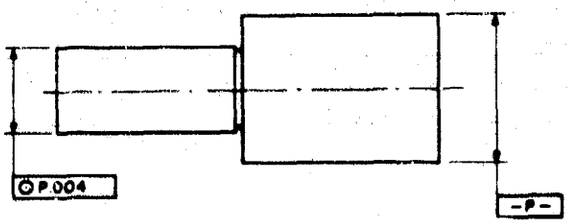


*Figure 5-11. Concentricity requirement*

If ovality is inherent in the part (thin-walled sections of large diameters), the tolerance for concentricity should not be less than the sum of the diametral tolerances, unless a requirement for maximum ovality is included, because the inspection will not discriminate between ovality and eccentricity unless laboratory methods are used. If the concentricity tolerance is less than the sum of the diametral tolerances, the inspector will reject the parts for failing to conform to the concentricity requirement (the diametral gages having accepted the parts), in spite of the fact that the parts might be perfectly concentric but out-of-round.

Downloaded from http://www.everyspec.com

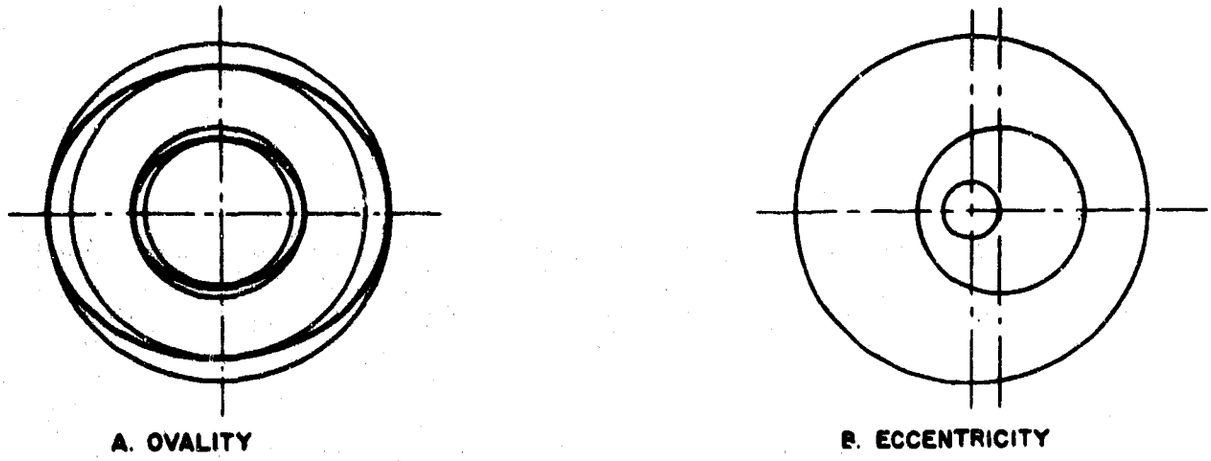


*Figure 5-12. Ovality and eccentricity tolerances*

In general, the concentricity symbol should be used only when two or more surfaces are involved. When a single surface is involved, the desired conditions should not be stated in terms of concentricity, but of some other attribute, such as straightness.

The symbol for perpendicularity [⊥ Axxx] indicates that the surface or form to which the symbol is applied must be perpendicular to the datum surface indicated by [- A -]. One example is shown on page 8 of Drawing 30-1-7. Another example is illustrated here in figure 5-13.

Figure 5-13a shows the intended conditions in a cone, that is, the entire form is perpendicular to the base of the cone. Figure 5-13b shows the condition which is to be controlled and the method of checking. It should be noted that the cone in figure 5-13b is concentric but not perpendicular. The condition shown cannot be controlled by concentricity requirements.

However, concentricity requirements may be required in order to control the condition shown in figure 5-14a. This cone is perpendicular to the base, but not concentric with the diametral surface A. Figure 5-14b illustrates the correct tolerancing of a flared cone to obtain the desired results.

Two examples of the use of the symbol for parallelism [∥ Axxx] are given on page 9 of Drawing 30-1-7, the first of which requires parallelism between two surfaces, and the second of which requires parallelism of a tapered form with a surface. However there are certain conditions of which the engineer must be aware. Figure 5-15a shows the conditions which the engineer desires, while figure 5-15b shows a condition which meets the requirement for parallelism, but which may not be desired.

The normal inspection process will not discriminate between lack of parallelism and the condition shown in figure 5-15b. Rejection would be on the basis of nonconformance with the requirement expressed in figure 5-15a, whereas in fact the piece shown in figure 5-15a does meet the requirement.

In the case of a very light part exhibiting the condition shown in figure 5-15b, the inspection process might accept the piece if the convex surface is resting on the surface plate, because the spring pressure of the dial indicator might cause the piece to roll in the direction that the indicator is moved. Consideration should be given to a requirement for flatness of the datum surface, in addition to the requirement for parallelism.

The symbol ⌖ indicates either symmetry or centrality. Symmetry is the equal distribution of a form about a centerline. Centrality is the spacing of surfaces equidistant from a centerline. In figure 13 of Drawing 30-1-7, the tongue at the bottom of the piece is symmetrical about the centerline of the datum surface [- P -]. The slot at the top of the piece is equally distributed, that is, the sides of the slot are equidistant from the centerline of the datum surface [- P -]. In actual practice, there are few occasions in

Downloaded from http://www.everyspec.com

the design of ammunition items when the independent symbol ⌀ is applicable. However, in many instances where assembly is the prime requisite, a dependent locational symbol indicating a requirement for centrality may be used to advantage, and a discussion of this point is to be found in paragraph 5-25.

It should be emphasized that the independent symbol [⌀P.004] refers to total variation and not to displacement of centerlines. This is easily understood if it is remembered that the centerline of the designated form may vary 0.002 on either side of the centerline of the datum form, thus allowing a total variation of 0.004.

Figure 16 of Drawing 30-1-7 illustrates a joint requirement for concentricity and perpendicularity. The prime requirement is for concentricity of the 0.874 diameter with the pitch diameter specified as the datum [-P-]. The secondary requirement is that the effect of lack of perpendicularity between the 0.874 diameter and the end surface [-R-] shall be included with the eccentricity in the total variation of 0.004 which may be indicated on the dial.

Since there is no specific requirement for perpendicularity of surface [-R-] with the pitch diameter [-P-], the combined requirement indicates that if the surfaces are concentric, then the play of the mating threads may allow surface [-R-] to be out of perpendicular with the pitch diameter within 0.004 on the dial reading taken at the opposite end of the piece. Figure 5-16 shows schematically the effect of each requirement, and of the combined requirement.

Figure 17 of Drawing 30-1-7 shows the prime requirement of concentricity of the threaded counterbore with the datum counterbore, and the secondary requirement of perpendicularity of the counterbores with the end surfaces [-R-] and [-S-]. In addition, there is an implied requirement that the effect of lack of parallelism of the axis of the screw thread with the centerline of the base counterbore shall be included in the total variation. This is implied by the symbol [0.25 / 2.50], which indicates that the total variation must not exceed 0.004 when readings are taken at gaging positions located 0.25 and 2.50 inches beyond end surface [-S-]. The greater length usually compares with the length of the mating part. If neither dial exceeds 0.004, then

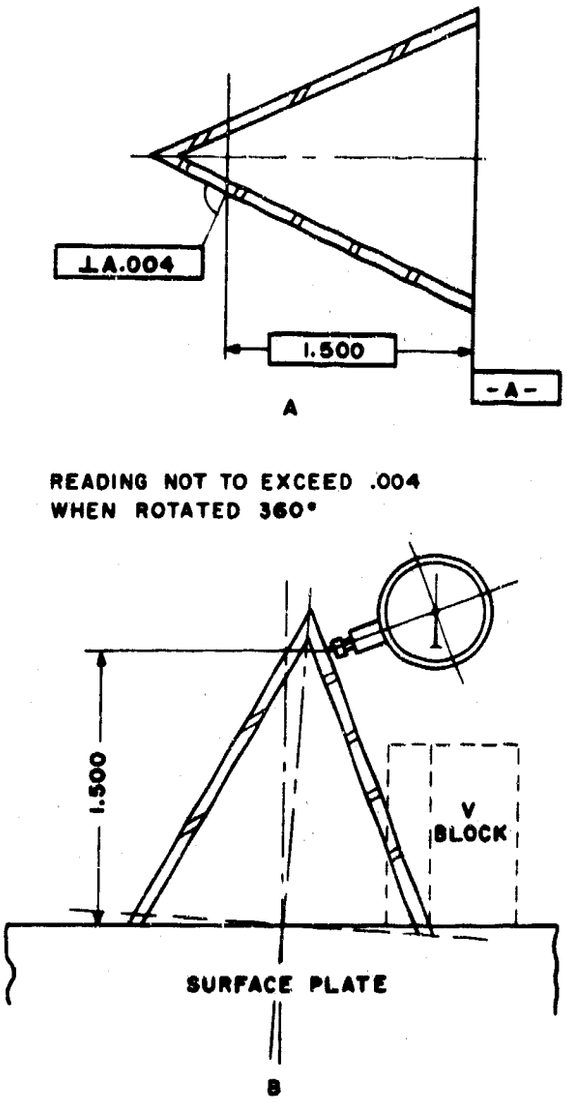


*Figure 5-13. Requirement for perpendicularity*

the part is acceptable. Figure 5-17 shows the effect of cocked centerlines on dial readings.

5-25. A Dependent Locational Tolerance is a variable, since the effect of associated dimensional tolerances affects the magnitude of the locational tolerance. Dependent locational tolerances are inspected by functional gages, which simulate the mating parts. This type of tolerance should be used when facility of assembly is the prime factor. Examples of dependent tolerance symbols are shown in Drawing 30-1-7, pages 12 through 16.

Downloaded from http://www.everyspec.com

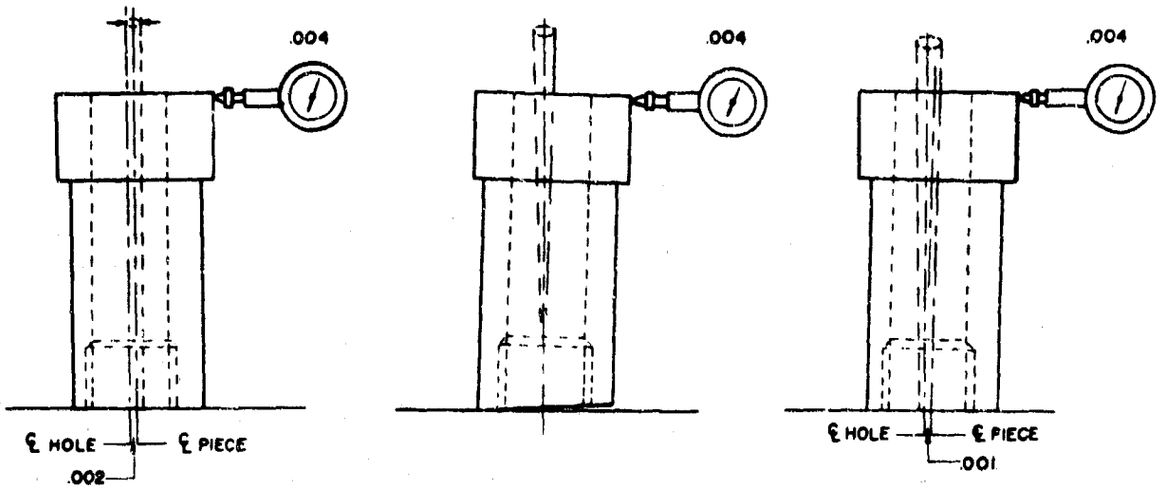


*Figure 5-14. Eccentricity of cone with base and correct method of dimensioning*

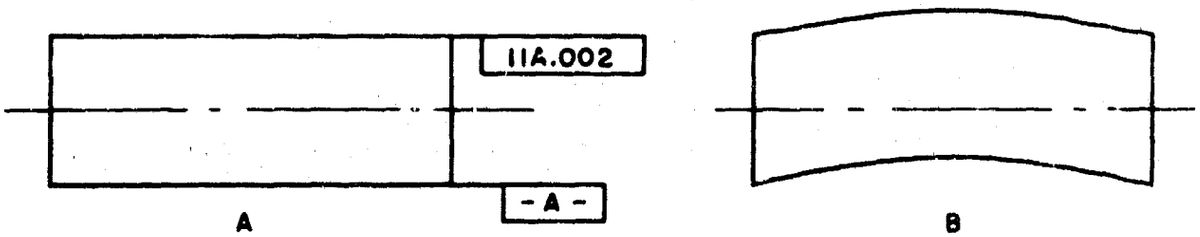


*Figure 5-15. Two conditions of parallelism*

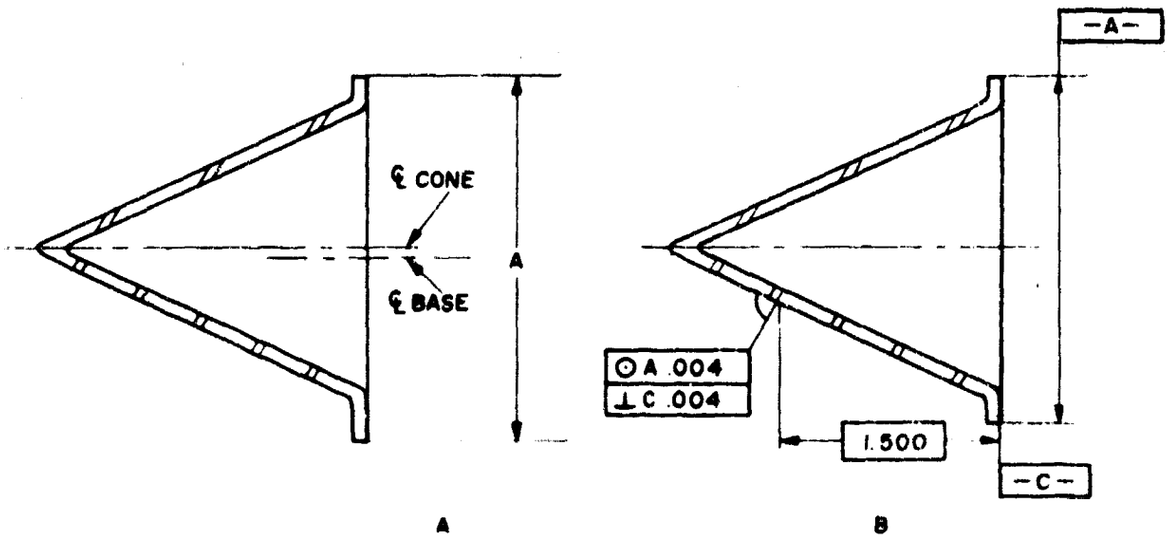


*Figure 5-16. Effects of concentricity and perpendicularity*

Downloaded from http://www.everyspec.com

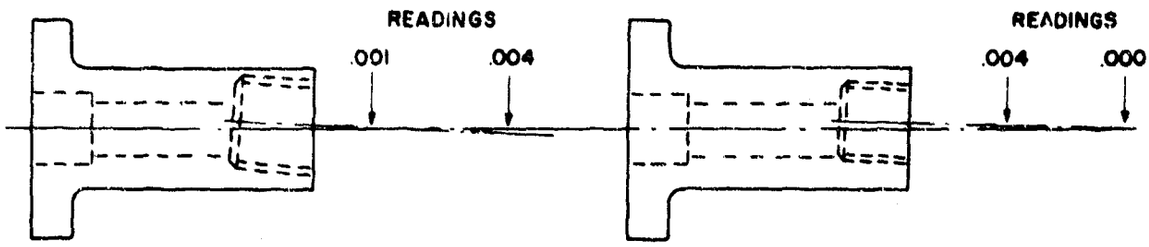


*Figure 5-17. Effect of cocked center lines on dial readings*

Dependent locational tolerances should be used, rather than toleranced coordinates, when dimensioning the location of holes. Figure 23A of Drawing 30-1-7 explains why this is desirable, but further explanation is given in the following paragraphs, since production and inspection are vitally interested in the method used.

Figure 5-18a shows a portion of simple part with a single hole, the location of which is fixed by coordinates. Figure 5-18b is an enlarged view of 5-18a. The square in the center shows the permissible tolerance zone in which the center of the hole may vary. The large circles show the positions of the minimum holes at the positions of maximum variation permitted by coordinate dimensions. In order to permit the manufacturer his full tolerance, the gaging pin would necessarily be of the shape shown by the four arcs that are drawn in heavier lines. Since the cost of making simple locational gages with pins of that shape would be prohibitive, the gage engineer will design the gage with a round pin. To ensure that only conforming parts will be accepted, the pin would necessarily be of the size shown by the dashed circle. The

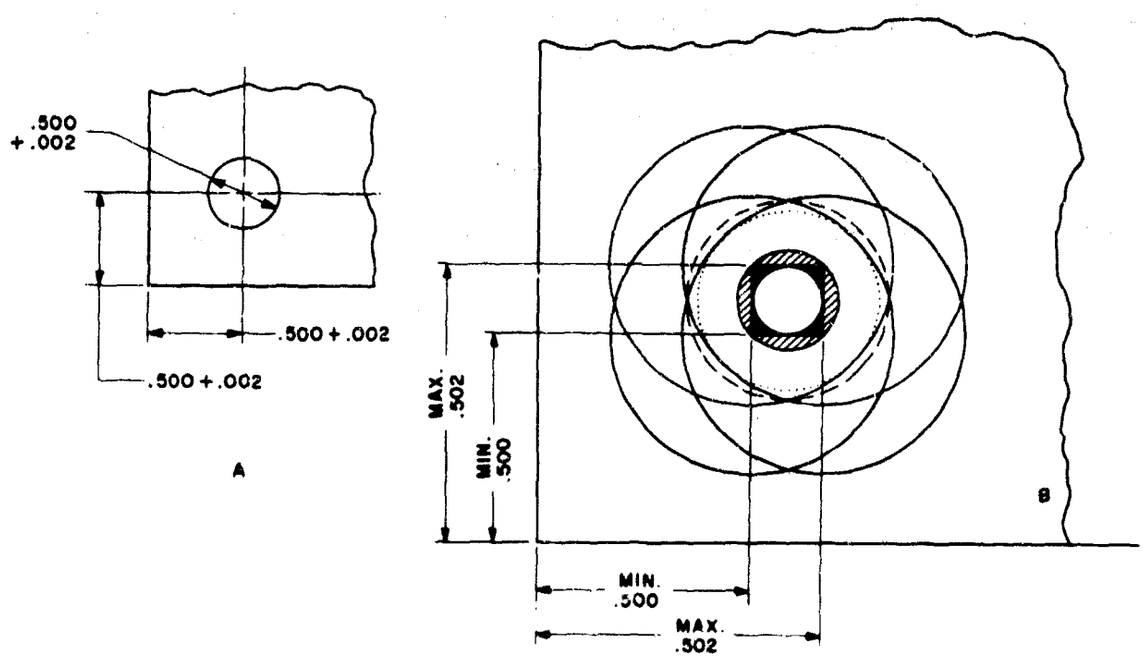


*Figure 5-18. Effect of hole location of coordinates on production and inspection*

Downloaded from http://www.everyspec.com

corresponding tolerance zone permitted by this gage is shown by the circle inscribed in the square, and the dark shaded areas of the square indicate the extent of the permissible tolerance zone that will be denied the manufacturer.

On the other hand, a gage to permit the manufacturer the full tolerance expressed on the drawing would necessarily contain a round pin of the size indicated by the dotted circle. The corresponding tolerance zone will be that circle in which the square is inscribed, and the light shaded areas indicate the extent to which parts out of tolerance limits will be accepted by the gage.

The same part, dimensioned with a dependent locational tolerance, is shown in figure 5-19a, and the explanation of it in figure 5-19b.

The intersection of the basic coordinates, the dimensions of which are theoretically exact, locates the theoretically exact center of the hole. Since nothing can be produced to exact dimensions, the small circle represents the locational tolerance area 0.002 in diameter, within which the actual center of the hole may vary when produced to minimum size. Since there are an infinite number of circles, representing the minimum hole, with centers located on the tolerance circle, representing maximum permissible locational variation, the pin of the gage will be made to a size equal to the minimum diameter of the hole minus the locational tolerance $\boxed{0.002}$. The difficulties encountered when toleranced coordinates were used have been overcome; the manufacturer has his full tolerance, and the gage will accept only conforming parts.

Figure 5-20 gives a graphic explanation of why the gage will accept the maximum hole even when the tolerance circle is increased by the amount of the tolerance on the diameter of the hole.

In the sketches, shown enlarged in the figure, the circular shaded area is the pin. The solid and dashed circles represent the extreme positions of the hole in which the gage pin will enter, the corresponding centerlines being shown

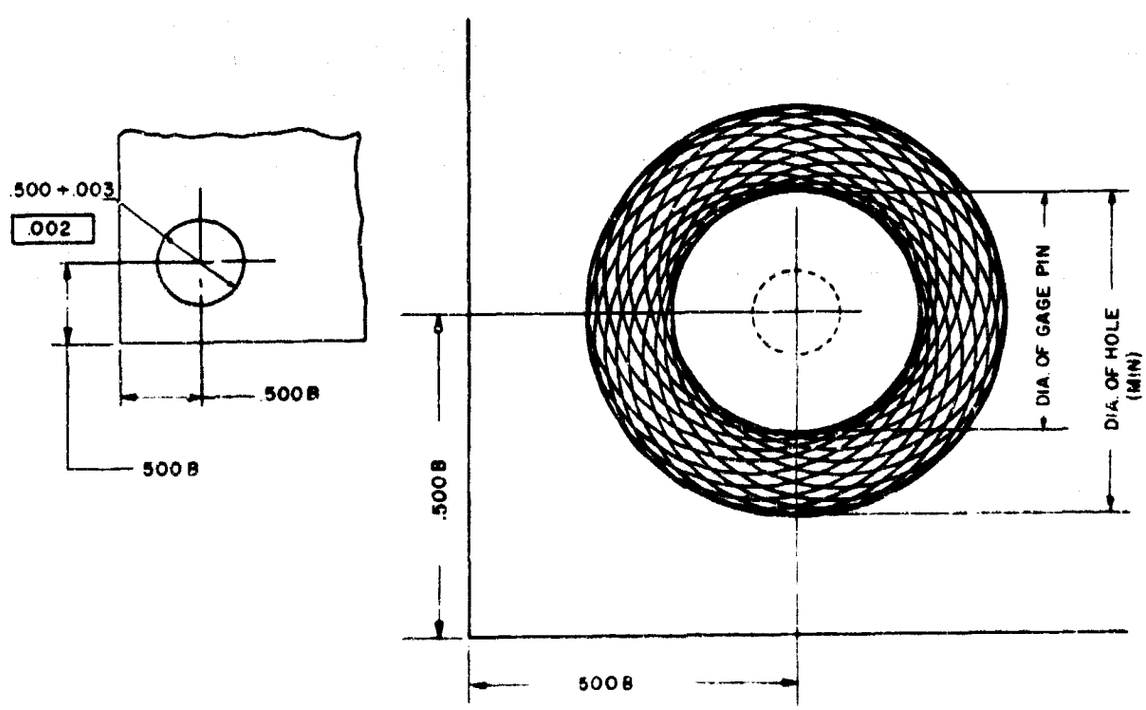


*Figure 5-19. Dependent locational tolerance*

Downloaded from http://www.everyspec.com

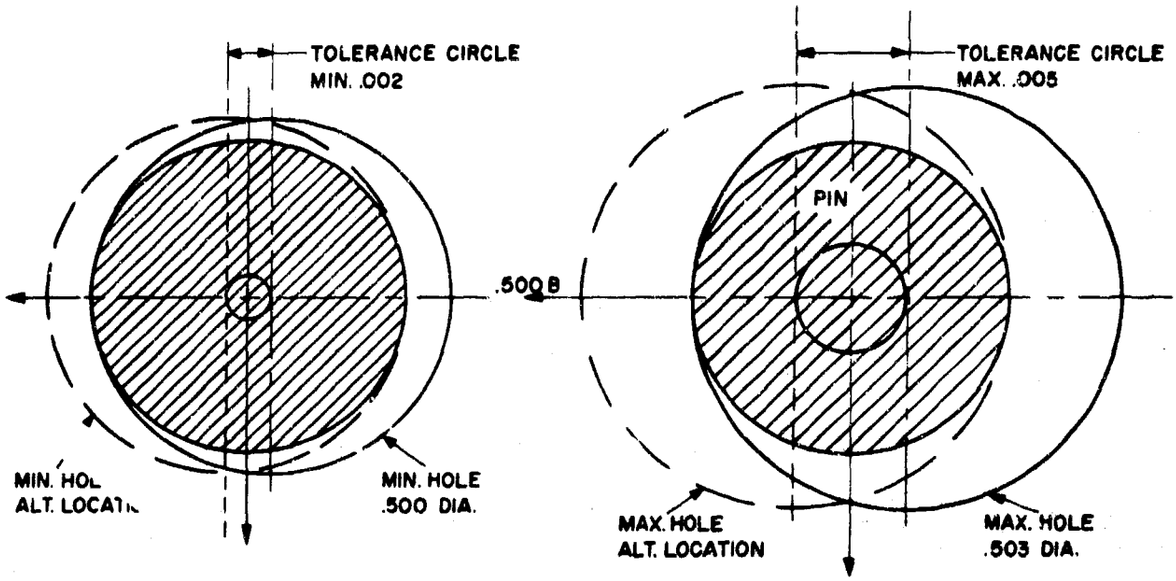


*Figure 5-20. Gaging pin in maximum and minimum holes*

solid and dotted. The areas in which the centers of the maximum and minimum holes may vary are shown as circles inscribed in the center of the pin. The diameter of the tolerance zone in which the minimum hole may vary is 0.002, shown on drawing as [0.002]. The diameter of the tolerance zone in which center of the maximum hole may vary is 0.005, the locational tolerance 0.002 plus the diametral tolerance 0.003.

The design engineer should bear in mind that the gage engineer will employ the dependent locational tolerance system, since he will specify round pins in the gages, regardless of whether the location of the holes is shown by tolerance coordinates, except in special applications. In order to explain the definition of a dependent locational tolerance symbol when shown as [P.004], figures 20 and 20A of Drawing 30-1-7 are reproduced here in figure 5-21.

The geometry of the part determines the requirement, and since the part is cylindrical it is obvious that the requirement [P.004] refers

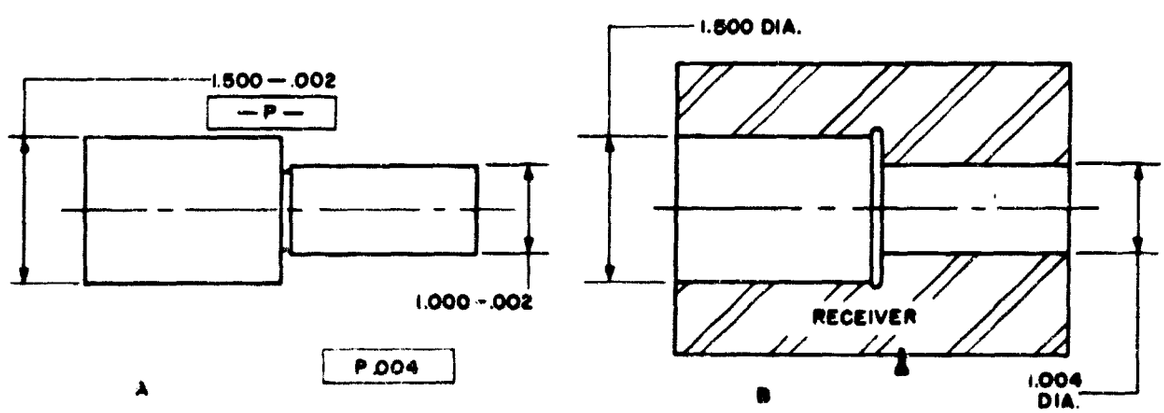


*Figure 5-21. Part and receiver in gaging requirements*

Downloaded from http://www.everyspec.com

to concentricity. The small diameter of the receiver is 1.004, permitting the centerline of the small diameter of the part to be displaced 0.002 in any direction from the centerline of the large diameter, when maximum metal conditions prevail in the part. When minimum metal conditions prevail, the effects of the diametral tolerance enter, and the centerline of the small diameter may be displaced 0.004 in any direction from the centerline of the large diameter. Figure 5-22 shows the variations possible under minimum and maximum metal conditions. It should be noted that the effect of ovality is checked in the gaging operation.

The methods of dimensioning and locating holes shown in figures 22, 23, and 24 of Drawing 30-1-7 will easily be understood when the foregoing principles of dependent locational tolerancing are grasped. It should be borne in mind, however, that not only will the positions of the holes in respect to the datum hole vary with the size, but they will also vary with respect to each other.

A variation of the dependent locational tolerance, involving basic angular and radial dimensioning, is shown in figure 5-23a. In the part illustrated, the large hole is located by dependent locational tolerance in the manner previously described. The small hole is located by a combination of a basic angular dimension and a basic radial dimension. Any attempt to use a toleranced angle and toleranced radius will result in a tolerance zone similar to that shown in figure 5-23b. Since the gage engineer will use round pins, the dark shaded areas represent the extent to which the contractor will be denied the use of the full tolerance when the gage accepts only conforming parts, while the light shaded areas represent the extent to which nonconforming parts will be accepted, if the

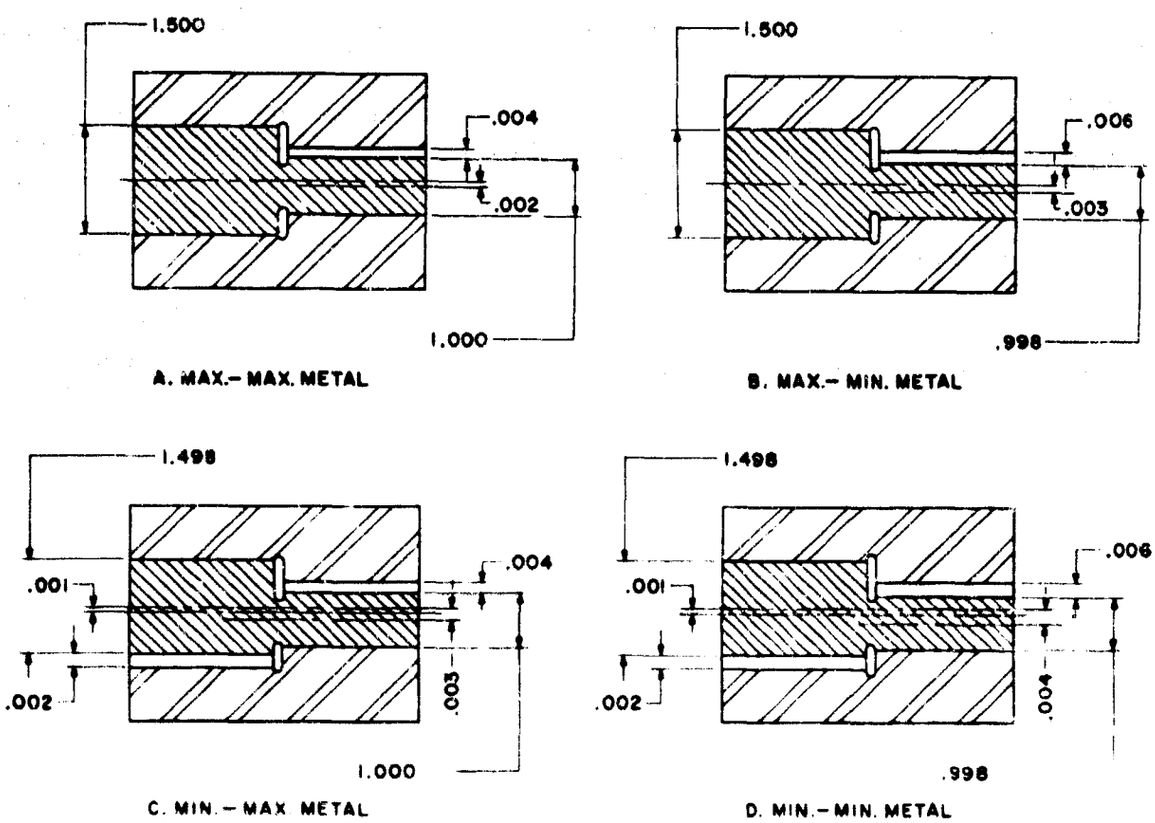


*Figure 5-22. Receiver and fixed dimensions — effect of dimensional and locational tolerances*

Downloaded from http://www.everyspec.com

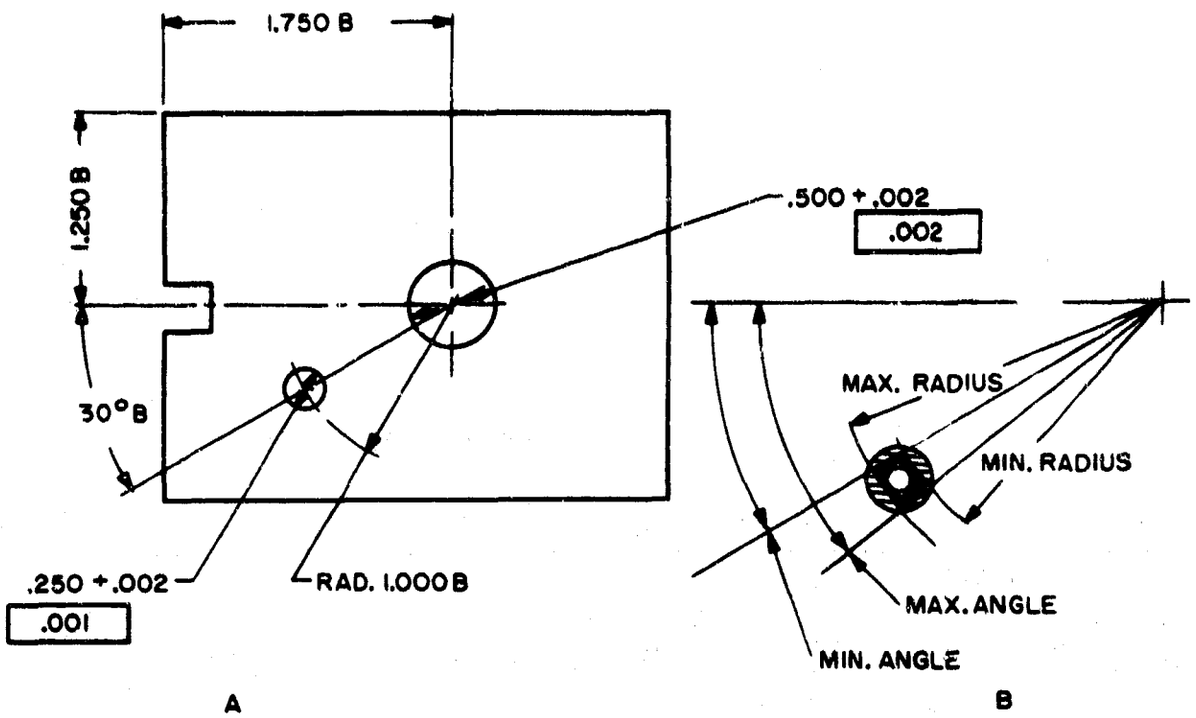


*Figure 5-23. Application of basic angular and radial dimensioning*

contractor receives the full extent of the tolerance zone. The use of the dependent locational tolerance will result in round tolerance zones benefiting both the producer and the gage designer.

Figure 26 of Drawing 30-1-7 shows a dependent locational tolerance applied to the same part shown in figure 16 (of the same drawing) with an independent tolerance. It will be noted that with the independent tolerance the total variation was 0.004. With the dependent tolerance, the functional tolerance increases from 0.004 for maximum metal conditions to 0.006 with minimum metal conditions. If the part is produced to minimum permissible size, the clearance between the part and receiver will be greater. This condition will permit greater eccentricity and/or cocking effect due to lack of perpendicularity between surface R and the thread when surface R makes up against the slider plug of the gage. Figure 5-24 shows the eccentricity and cocking permissible when metal conditions are maximum, while C and D show the same conditions when metal conditions are minimum.

The dependent locational tolerance should not be applied to a part without consideration of the implications. Only the effect of lack of perpendicularity is included, both in the dependent and the independent tolerance applications to this part. In both cases the lack of perpendicularity is the amount of cocking permitted as a result of play of the mating threads. A separate perpendicularity requirement should be used when the degree of contact between seating surfaces is important. In figure 26 (Drawing 30-1-7) there is no requirement that surface R shall seat 360 degrees on the gage plug. It might only seat 5 degrees, and if the threads were a close fit, the gage might still accept the part. Figure 5-25, which is an enlarged view of the area circled in figure 5-24d, explains why the gage may accept a part when the lack of perpendicularity is greater than the apparent effect.

The dependent symbol shown in figure 26 of Drawing 30-1-7 is particularly applicable to mating parts that after assembly must fit into a third component or into a chamber. It should

Downloaded from http://www.everyspec.com

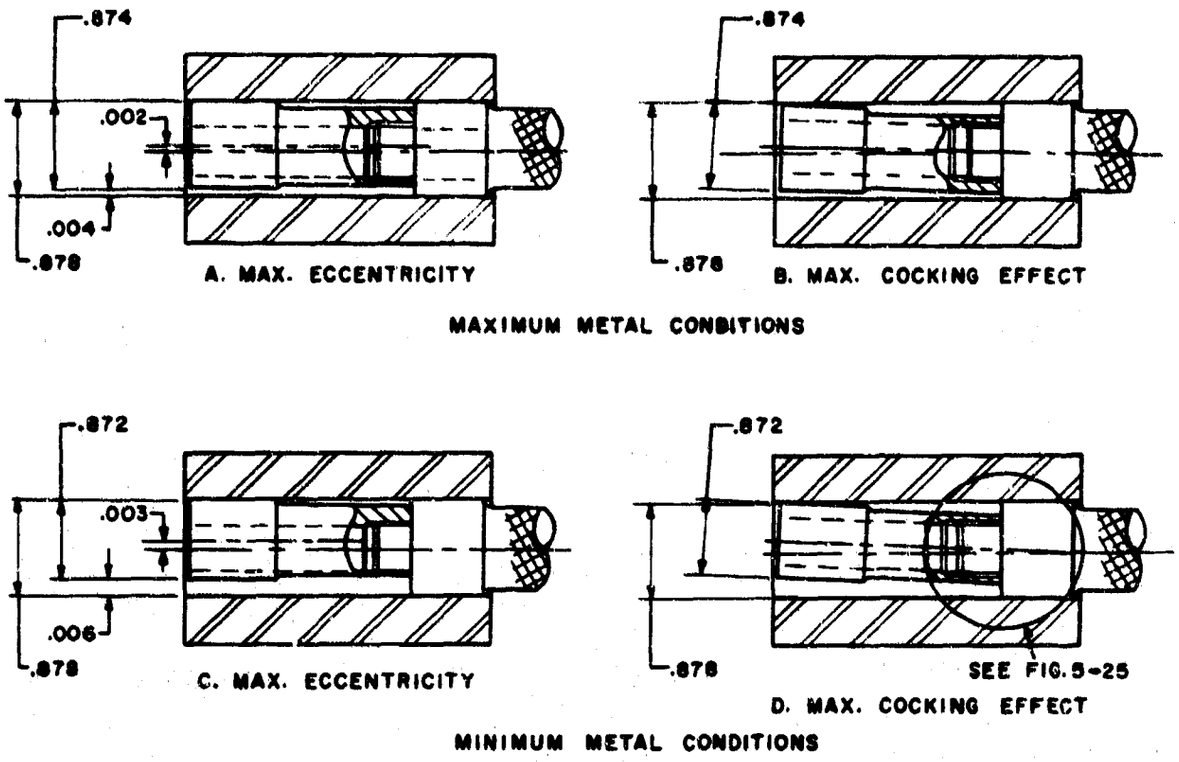


*Figure 5-24. Effect of variation in size on locational tolerance*

not be used where good seating is required, such as in the case shown below in figure 5-26a. The requirement should be shown as in figure 5-26b.

5-26. Centrality of Holes. An important application of the dependent locational tolerance symbol to indicate a centrality requirement is in the dimensioning of holes drilled radially in a cylindrical piece. Figure 5-27 shows an implied requirement that the small hole be located radially, that is, the centerline of the small hole will intersect the centerline of the longitudinal hole. However, the requirement is only implied by the drawing, it is not stated. The only stated requirements are that the small hole be 0.200 ±0.002 in diameter, and located longitudinally 0.600 ±0.001 from the seating face. The implied requirement is that the small hole be drilled as shown at position 1. However, if the hole is drilled at position 2, it will still meet the stated requirements as to location and diameter.

When requirements on a drawing are implied instead of stated, the gage engineer must examine the drawings, determine the functions of the various components, and decide the real requirements that will be incorporated in the

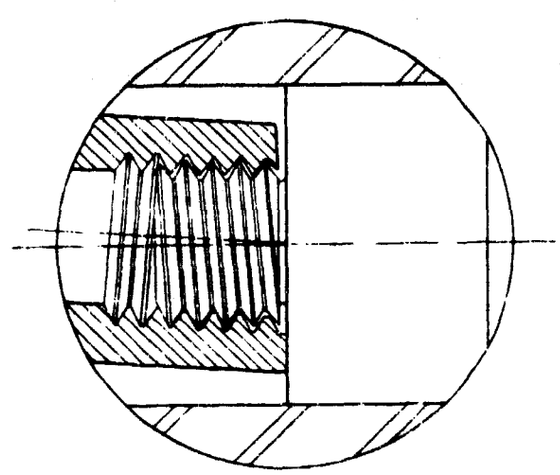

*Figure 5-25. Cocking caused by threads binding before full seating*

Downloaded from http://www.everyspec.com

gage. It is the design engineer, knowing the functions of each component, who should decide upon the real requirements, and who should state them on the drawing in the form of symbols or notes. If all the requirements are stated and none are implied, the gage engineer can design suitable gages to check the requirements without having any knowledge of the functioning of the components.

Figure 5-28 shows the same part, in which the real requirements for the location and size of the small hole are stated. The basic dimension states the theoretically exact longitudinal location of the center of the hole. The actual center may vary within a tolerance circle, 0.002 in diameter around the theoretically exact center, when the hole is produced to the minimum size.

5-27. Basic Angle Dimensioning. This system of dimensioning is explained in Drawing 30-1-7, and no further explanation is given in this section. However, the engineer should be aware of certain pitfalls in connection with the use of this system. In figure 5, of Drawing 30-1-7, it is important to note that the toleranced dimension 1.500 - 0.005 is specified to sharp corners. This is not a requirement for sharp corners on the part produced. Since MIL-G-2550 specifies

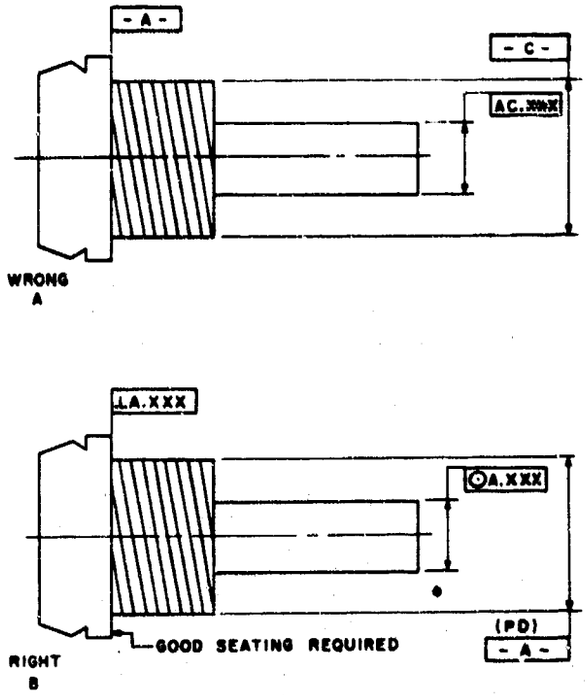


*Figure 5-26. Application of dependent symbol*

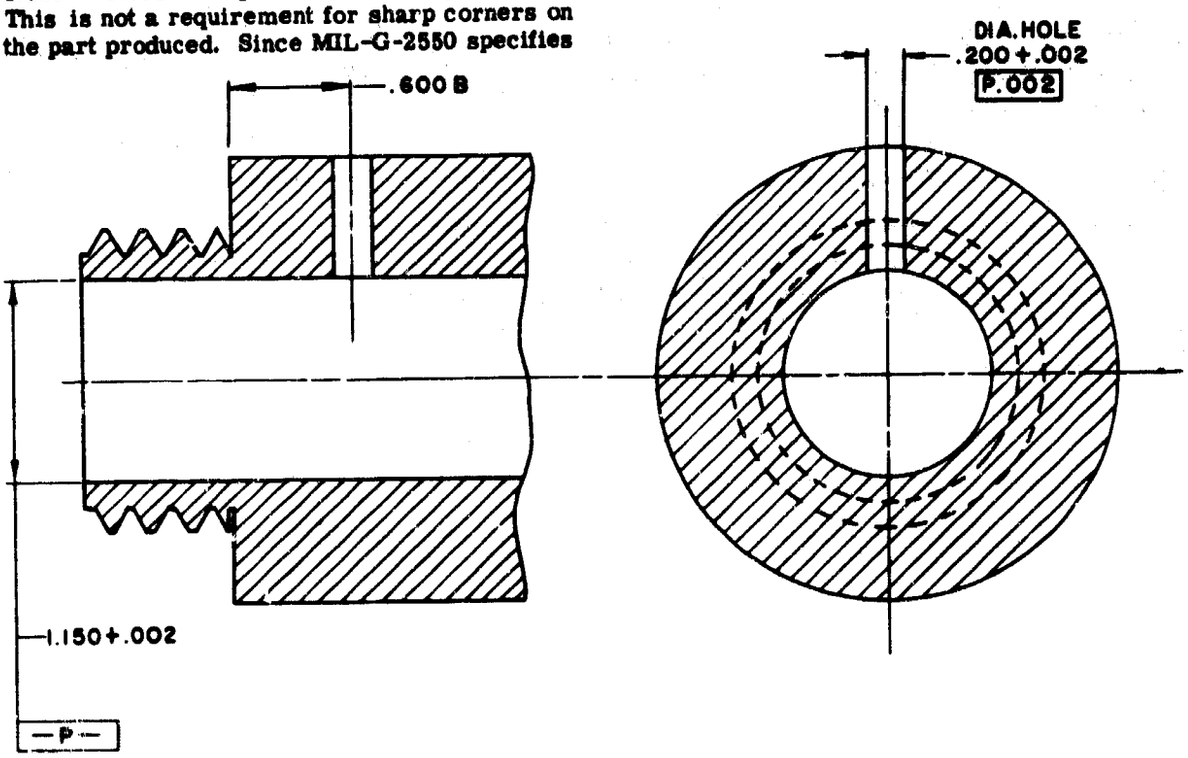


*Figure 5-27. Implied requirement for centrality of small hole*

Downloaded from http://www.everyspec.com

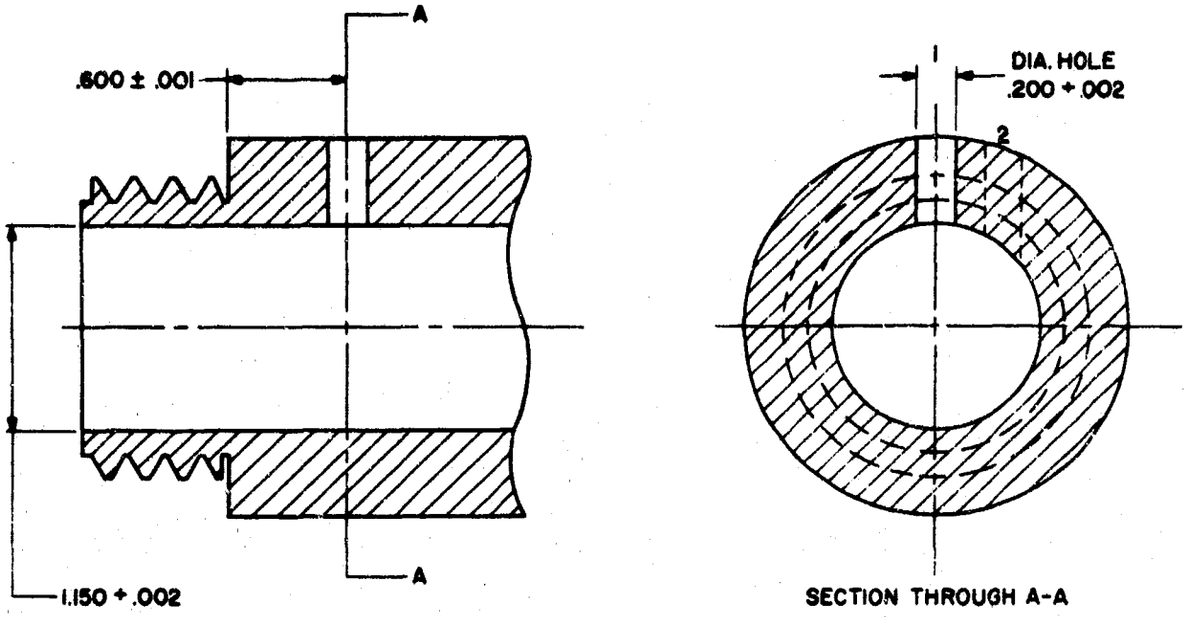


*Figure 5-28. Correct statement of requirements for small hole*

that sharp corners shall be broken, the inspector cannot check this dimension directly. The gage engineer will convert the requirements to the datum method of dimensioning tapers when designating a gage for such a part. The design engineer should also use the datum method wherever possible. If sharp corners are required, the note "sharp corners required" should be added to the drawing.

5-28. Effect of Gage Tolerance on Component Tolerance. When specifying tolerances on dimensions, the design engineer must be aware of the effect of gage tolerances on the component tolerances.

Although gages are produced by methods that permit closer tolerances than are possible with mass-produced components, there is still a tolerance which must be allowed to the gage maker. And since the usual type of dimensional gaging requires two gages, GO and NOT GO, the gage tolerances are compounded. The GO gage checks the dimension in the direction of maximum metal conditions, while the NOT GO gage checks the dimension in the direction of minimum metal conditions. All gage tolerances are within the component tolerance, and in effect the total amount of the gage tolerances represents a proportion of the component tolerance which is denied the contractor. In addition, since parts must enter or be entered by the GO gage to be acceptable, their constant use produces wear on the gaging surfaces. To reduce the expense of frequent replacement of gages, and to ensure that parts will not exceed the maximum permissible metal conditions, a wear allowance, also within the component tolerance, is applied to the GO gage prior to the application of the gage tolerance.

Figure 5-29a shows a simple cylindrical part dimensioned diametrically, the shaded areas indicating schematically the tolerance zone permitted by the drawing. Figure 5-29b shows an enlargement of figure 5-29a, in which there are indicated schematically the effects of Ordnance acceptance gage tolerance and work gage tolerances on the tolerance zone permitted by the drawing. It will be noted that there is no wear

Downloaded from http://www.everyspec.com

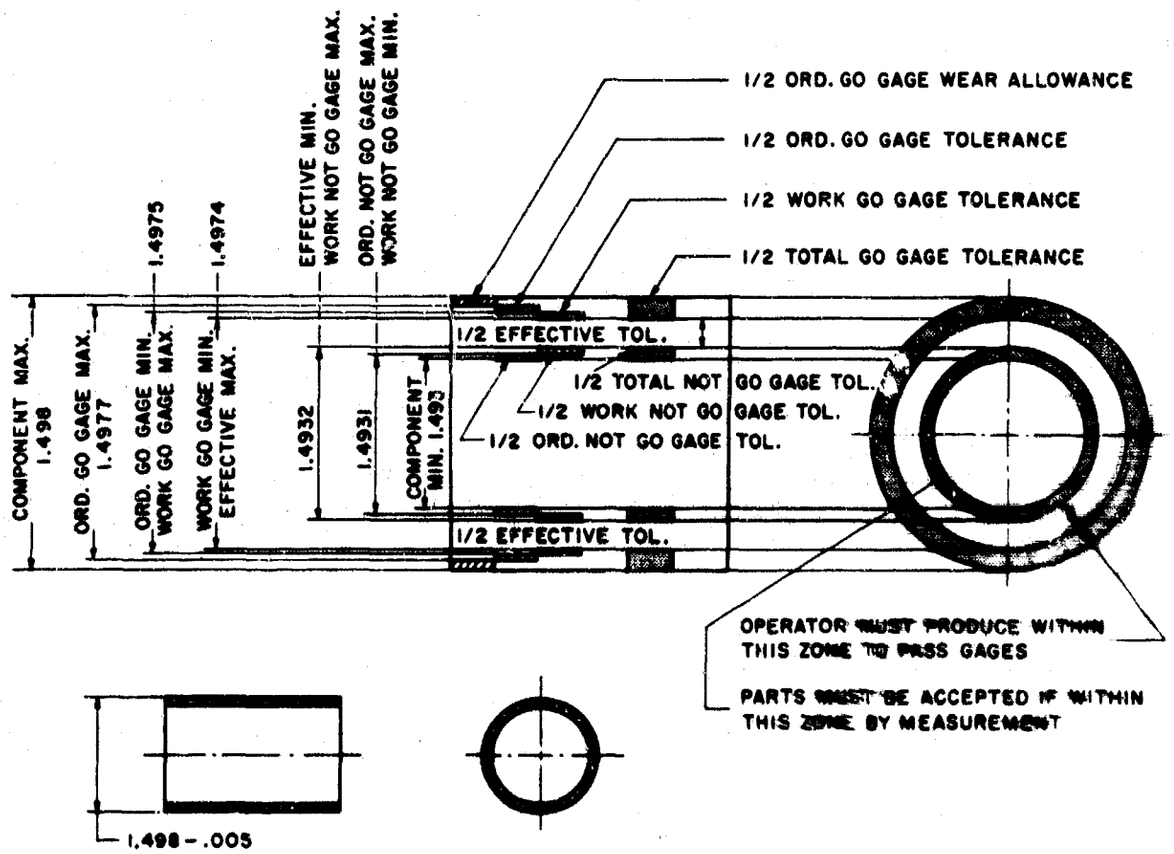


*Figure 5-29. Effect of gage tolerances on component tolerance*

allowance on the Ordnance NOT GO gage, since parts should not enter or be entered. In addition, any wear will take the gage further into the tolerance zone permitted by the drawing, and thus give more assurance that nonconforming parts will not be accepted by the gage. It will also be noted that in addition to the encroachment on the permitted tolerance zone by Ordnance gages, work gages normally are dimensioned and toleranced within the limits of the Ordnance gages, thus further reducing the tolerance zone available for the actual producer of the parts. However, no wear allowance, as such, is applied on the work GO gages.

Downloaded from http://www.everyspec.com

# ENGINEERING DESIGN HANDBOOK SERIES

Listed below are the Handbooks which have been published or submitted for publication. Handbooks with publication dates prior to 1 August 1962 were published as 20-series Ordnance Corps pamphlets. AMC Circular 310-38, 19 July 1963, redesignated those publications as 706-series AMC pamphlets (i.e., ORDP 20-138 was redesignated AMCP 706-138). All new, reprinted, or revised Handbooks are being published as 706-series AMC pamphlets.

## General and Miscellaneous Subjects

| No. | Title |
|---|---|
| 106 | Elements of Armament Engineering, Part One, Sources of Energy |
| 107 | Elements of Armament Engineering, Part Two, Ballistics |
| 108 | Elements of Armament Engineering, Part Three, Weapon Systems and Components |
| 110 | Experimental Statistics, Section 1, Basic Concepts and Analysis of Measurement Data |
| 111 | Experimental Statistics, Section 2, Analysis of Enumerative and Classificatory Data |
| 112 | Experimental Statistics, Section 3, Planning and Analysis of Comparative Experiments |
| 113 | Experimental Statistics, Section 4, Special Topics |
| 114 | Experimental Statistics, Section 5, Tables |
| 121 | Packaging and Pack Engineering |
| 134 | Maintenance Engineering Guide for Ordnance Design |
| 135 | Inventions, Patents, and Related Matters (Revised) |
| 136 | Servomechanisms, Section 1, Theory |
| 137 | Servomechanisms, Section 2, Measurement and Signal Converters |
| 138 | Servomechanisms, Section 3, Amplification |
| 139 | Servomechanisms, Section 4, Power Elements and System Design |
| 170(C) | Armor and Its Application to Vehicles (U) |
| 250 | Guns--General (Guns Series) |
| 252 | Gun Tubes (Guns Series) |
| 270 | Propellant Actuated Devices |
| 290(C) | Warheads--General (U) |
| 331 | Compensating Elements (Fire Control Series) |
| 355 | The Automotive Assembly (Automotive Series) (Revised) |

## Ammunition and Explosives Series

| | |
|---|---|
| 175 | Solid Propellants, Part One |
| 176(C) | Solid Propellants, Part Two (U) |
| 177 | Properties of Explosives of Military Interest, Section 1 |
| 178(C) | Properties of Explosives of Military Interest, Section 2 (U) |
| 179 | Explosive Trains |
| 210 | Fuzes, General and Mechanical |
| 211(C) | Fuzes, Proximity, Electrical, Part One (U) |
| 212(S) | Fuzes, Proximity, Electrical, Part Two (U) |
| 213(S) | Fuzes, Proximity, Electrical, Part Three (U) |
| 214(S) | Fuzes, Proximity, Electrical, Part Four (U) |
| 215(C) | Fuzes, Proximity, Electrical, Part Five (U) |
| 244 | Section 1, Artillery Ammunition--General, with Table of Contents, Glossary and Index for Series |
| 245(C) | Section 2, Design for Terminal Effects (U) |
| 246 | Section 3, Design for Control of Flight Characteristics |
| 247 | Section 4, Design for Projection |
| 248 | Section 5, Inspection Aspects of Artillery Ammunition Design |
| 249 | Section 6, Manufacture of Metallic Components of Artillery Ammunition |

## Ballistic Missile Series

| No. | Title |
|---|---|
| 281(S-RD) | Weapon System Effectiveness (U) |
| 282 | Propulsion and Propellants |
| 283 | Aerodynamics |
| 284(C) | Trajectories (U) |
| 286 | Structures |

## Ballistics Series

| | |
|---|---|
| 140 | Trajectories, Differential Effects, and Data for Projectiles |
| 150 | Interior Ballistics of Guns |
| 160(S) | Elements of Terminal Ballistics, Part One, Introduction, Kill Mechanisms, and Vulnerability (U) |
| 161(S) | Elements of Terminal Ballistics, Part Two, Collection and Analysis of Data Concerning Targets (U) |
| 162(S-RD) | Elements of Terminal Ballistics, Part Three, Application to Missile and Space Targets (U) |

## Carriages and Mounts Series

| | |
|---|---|
| 340 | Carriages and Mounts--General |
| 341 | Cradles |
| 342 | Recoil Systems |
| 343 | Top Carriages |
| 344 | Bottom Carriages |
| 345 | Equilibrators |
| 346 | Elevating Mechanisms |
| 347 | Traversing Mechanisms |

## Military Pyrotechnics Series

| | |
|---|---|
| 186 | Part Two, Safety, Procedures and Glossary |
| 187 | Part Three, Properties of Materials Used in Pyrotechnic Compositions |

## Surface-to-Air Missile Series

| | |
|---|---|
| 291 | Part One, System Integration |
| 292 | Part Two, Weapon Control |
| 293 | Part Three, Computers |
| 294(S) | Part Four, Missile Armament (U) |
| 295(S) | Part Five, Countermeasures (U) |
| 296 | Part Six, Structures and Power Sources |
| 297(S) | Part Seven, Sample Problem (U) |

## Materials Series*

| | |
|---|---|
| 149 | Rubber and Rubber-Like Materials |
| 212 | Gasket Materials (Nonmetallic) |
| 691 | Adhesives |
| 692 | Guide to Selection of Rubber O-Rings |
| 693 | Magnesium and Magnesium Alloys |
| 694 | Aluminum and Aluminum Alloys |
| 697 | Titanium and Titanium Alloys |
| 698 | Copper and Copper Alloys |
| 699 | Guide to Specifications for Flexible Rubber Products |
| 700 | Plastics |
| 721 | Corrosion and Corrosion Protection of Metals |
| 722 | Glass |

*The Materials Series is being published as Military Handbooks (MIL-HDBK-) which are available to Department of Defense Agencies from the Naval Supply Depot, 5801 Tabor Avenue, Philadelphia, Pennsylvania 19120.