Downloaded from http://www.everyspec.com

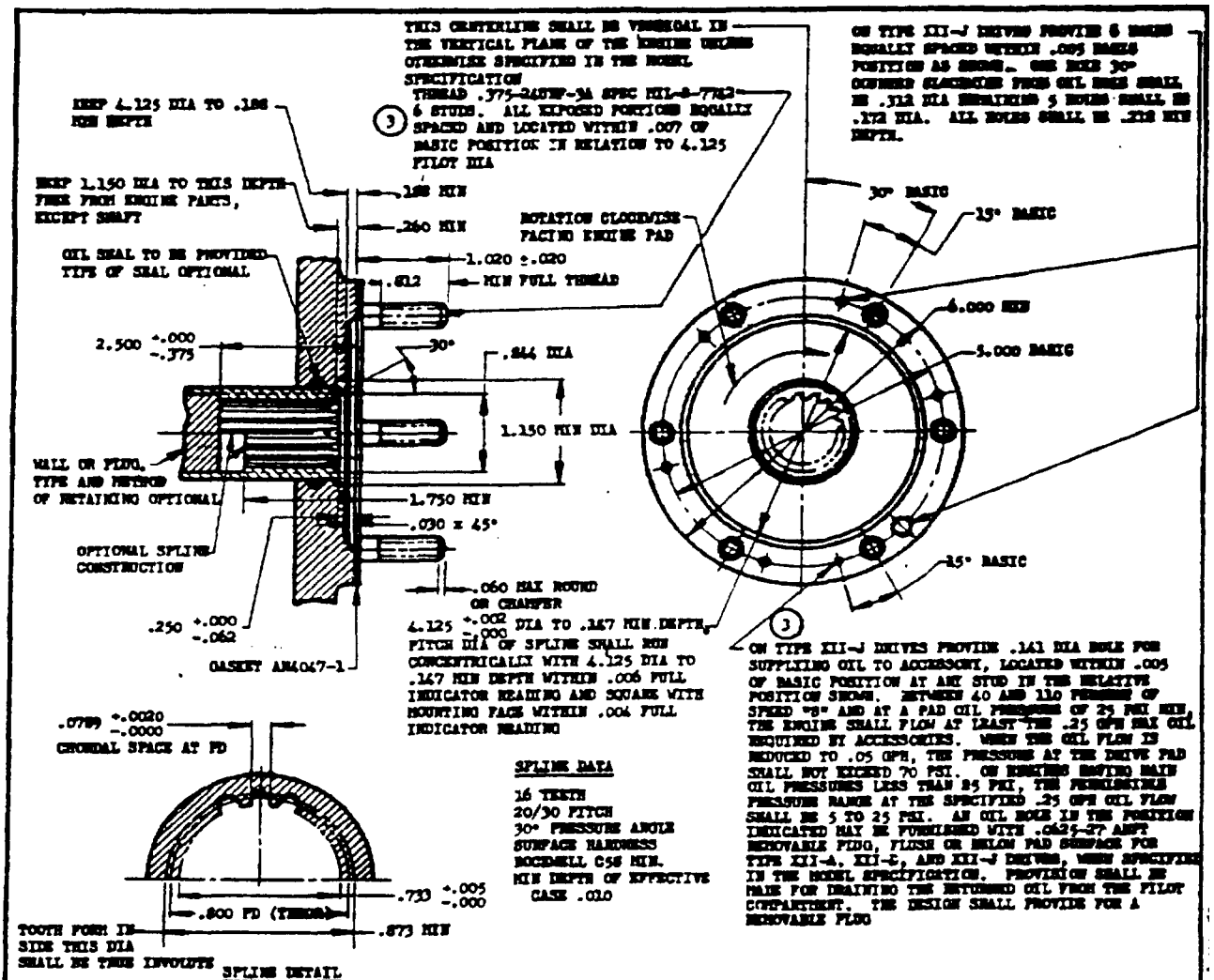

TYPE	SPEED, STRENGTH, ACCESSORY DATA, AND USE								
	TORQUE LB-IN.			"S" SPEED RPM	ACCESSORY WEIGHT LB MAX	OVERHUNG MOMENT (3) LB-IN. MAX	(3) ACCESSORY CLEARANCE AS APPLICABLE	NORMAL USE	TYPE OF ENGINE
	T_e	T_o	T_s						
XII-A	500	750	2200	7500-8250	65	400	AND10305	GENERATOR	RECIPROCATING
XII-B	500	750	2200	(a) 6000	65	500	AND10305	GENERATOR	TURBOJET AND TURBOPROP
XII-J	600	900	2700	3250-3750	40	350	(b) (3)	LOW SPEED FLUID POWER PUMPS (3)	ALL ENGINES

(a) +400 -000 RPM WHEN THE ENGINE IS OPERATED AT 75% NORMAL SEA LEVEL STATIC OUTPUT.

(3) (b) ACCESSORY CLEARANCE SHALL BE PROVIDED IN ACCORDANCE WITH MANUFACTURER'S MODEL SPECIFICATION.

(3) FLANGE ADAPTER AND SPLINE ADAPTER IN ACCORDANCE WITH AN4138-1A AND AN4141-2, RESPECTIVELY, SHALL BE FURNISHED ON TYPE XII-J DRIVES FOR CONVERTING TO A TYPE XI DRIVE WHEN SPECIFIED IN THE ENGINE MODEL SPECIFICATION.

PAD OUTLINE AS DIMENSIONED IS A BASIC MINIMUM AREA REQUIREMENT.

THE OIL LEAKAGE OUT OF THIS DRIVE SHALL NOT EXCEED 20C PER HOUR.

(3) SPEED: "S" DRIVE SHAFT SPEED AT NORMAL RATED ENGINE SPEED FOR RECIPROCATING ENGINES AND AT 75% NORMAL SEA LEVEL STATIC OUTPUT FOR TURBINE ENGINES.

STRENGTH: TO BE CAPABLE OF DRIVING CONTINUOUS TORQUE LOAD (T_e) AT ANY ENGINE SPEED. THE DRIVE SHALL WITHSTAND STATIC TORQUE (T_s) WITHOUT FAILURE OR PERMANENT DEFORMATION. IN ADDITION, THE DRIVES SHALL BE ADEQUATE FOR FIVE (5) MINUTE PERIODS OF TORQUE OVERLOAD (T_o) OPERATION, WHICH OVERLOAD PERIODS SHALL BE CONSIDERED AS OCCURRING AT FOUR (4) HOUR INTERVALS.

REMOVE ALL BURRS AND SHARP EDGES.

DIMENSIONS IN INCHES. UNLESS OTHERWISE SPECIFIED, TOLERANCES: DECIMALS ±.010, ANGLES ±0°.

(3) THIS DRAWING AND THE APPLICABLE ENGINE SPECIFICATIONS, TOGETHER, COMPLETELY DEFINE THE DESIGN REQUIREMENTS.

AIR FORCE-NAVY AERONAUTICAL DESIGN STANDARD

DRIVE - TYPE XII ENGINE ACCESSORY

AND20002

SHEET 1 OF 1

Downloaded from http://www.everyspec.com

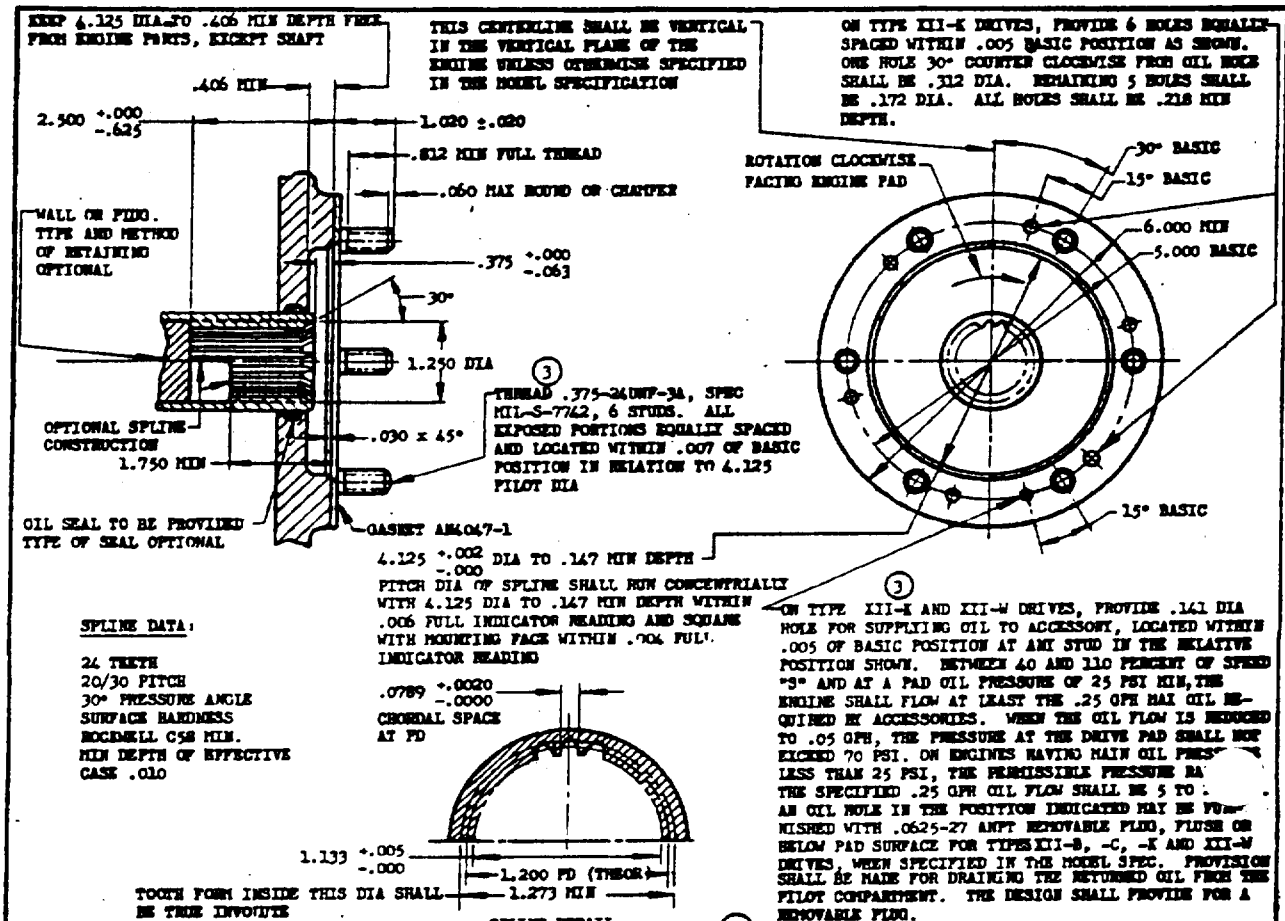

SPEED, STRENGTH, ACCESSORY DATA AND USE

TYPE	TORQUE LB-IN. T_c	T_o	T_s	"S" SPEED - RPM	ACCESSORY WEIGHT LB MAX	OVERHUNG MOMENT LB-IN. MAX	ACCESSORY CLEARANCE AS APPLICABLE	NOMINAL USE	TYPE OF ENGINE
XII-B	1000	1500	4 400	7500 - 8250	65	400	AND10305	GENERATOR	RECIPROCATING
XII-C	1500	2250	6 600	7500 - 8250	65	400	AND10305 (b)	GENERATOR POWER TAKEOFF	RECIPROCATING
XII-E	1000	1500	4 400	(a) 6000	75	625	AND10305	GENERATOR	TURBOJET AND TURBOPROP
XII-F	1500	2250	6 600	(a) 6000	75	625	AND10305 (b)	GENERATOR POWER TAKEOFF	TURBOJET AND TURBOPROP
XII-K	1000	1500	4 400	3250 - 3750	50	400	(b)	LOW SPEED FLUID POWER PUMPS	ALL
XII-M	2500	3750	11 000	7500 - 8250	65	400	AND10305 (b)	GENERATOR POWER TAKEOFF	RECIPROCATING
XII-N	2500	3750	11 000	(a) 6000	75	625	AND10305 (b)	GENERATOR POWER TAKEOFF	TURBOJET AND TURBOPROP
XII-W	1500	2250	6 600	3250 - 3750	75	625	(b)	LOW SPEED FLUID POWER PUMPS	ALL

(a) 4400 - 000 RPM WHEN THE ENGINE IS OPERATING AT 75% NORMAL SEA LEVEL STATIC OUTPUT.
(b) ACCESSORY CLEARANCE SHALL BE PROVIDED IN ACCORDANCE WITH MANUFACTURER'S MODEL SPECIFICATION.
SPLINE ADAPTER IN ACCORDANCE WITH AN4052-1 SHALL BE FURNISHED WHEN SPECIFIED IN THE ENGINE MODEL SPECIFICATION. FLANGE ADAPTER AND SPLINE ADAPTER IN ACCORDANCE WITH AN4138-1A AND AN4141-3, RESPECTIVELY, SHALL BE FURNISHED ON TYPE XII-K AND XII-W DRIVES FOR CONVERTING TO A TYPE XI DRIVE WHEN SPECIFIED IN THE ENGINE MODEL SPECIFICATION.
PAD OUTLINE AS DIMENSIONED IS A BASIC MINIMUM AREA REQUIREMENT.
THE OIL LEAKAGE OUT OF THIS DRIVE SHALL NOT EXCEED 2 CC PER HOUR.
SPEED: "S" DRIVE SHAFT SPEED AT NORMAL RATED ENGINE SPEED FOR RECIPROCATING ENGINES AND AT 75% NORMAL SEA LEVEL STATIC OUTPUT FOR TURBINE ENGINES.
STRENGTH: TO BE CAPABLE OF DRIVING CONTINUOUS TORQUE LOAD (T_c) AT ANY ENGINE SPEED. THE DRIVE SHALL WITHSTAND STATIC TORQUE (T_s) WITHOUT FAILURE OR PERMANENT DEFORMATION. IN ADDITION, THE DRIVES SHALL BE ADEQUATE FOR FIVE (5) MINUTE PERIODS OF TORQUE OVERLOAD (T_o) OPERATION, WHICH OVERLOAD PERIODS SHALL BE CONSIDERED AS RECURRING AT FOUR (4) HOUR INTERVALS.
REMOVE ALL BURRS AND SHARP EDGES.
DIMENSIONS IN INCHES. UNLESS OTHERWISE SPECIFIED, TOLERANCES: DECIMALS ±.010, ANGLES ±2°.
THIS DRAWING AND THE APPLICABLE ENGINE SPECIFICATION, TOGETHER, COMPLETELY DEFINE THE DESIGN REQUIREMENTS.

APPROVED 7 May 47 REVISED (1) 15 Jul 49 (2) 14 Feb 51 (3) 4 Mar 53

AIR FORCE-NAVY AERONAUTICAL DESIGN STANDARD

DRIVE - TYPE XII ENGINE ACCESSORY

AND20002

SHEET 2 OF 3

Downloaded from http://www.everyspec.com

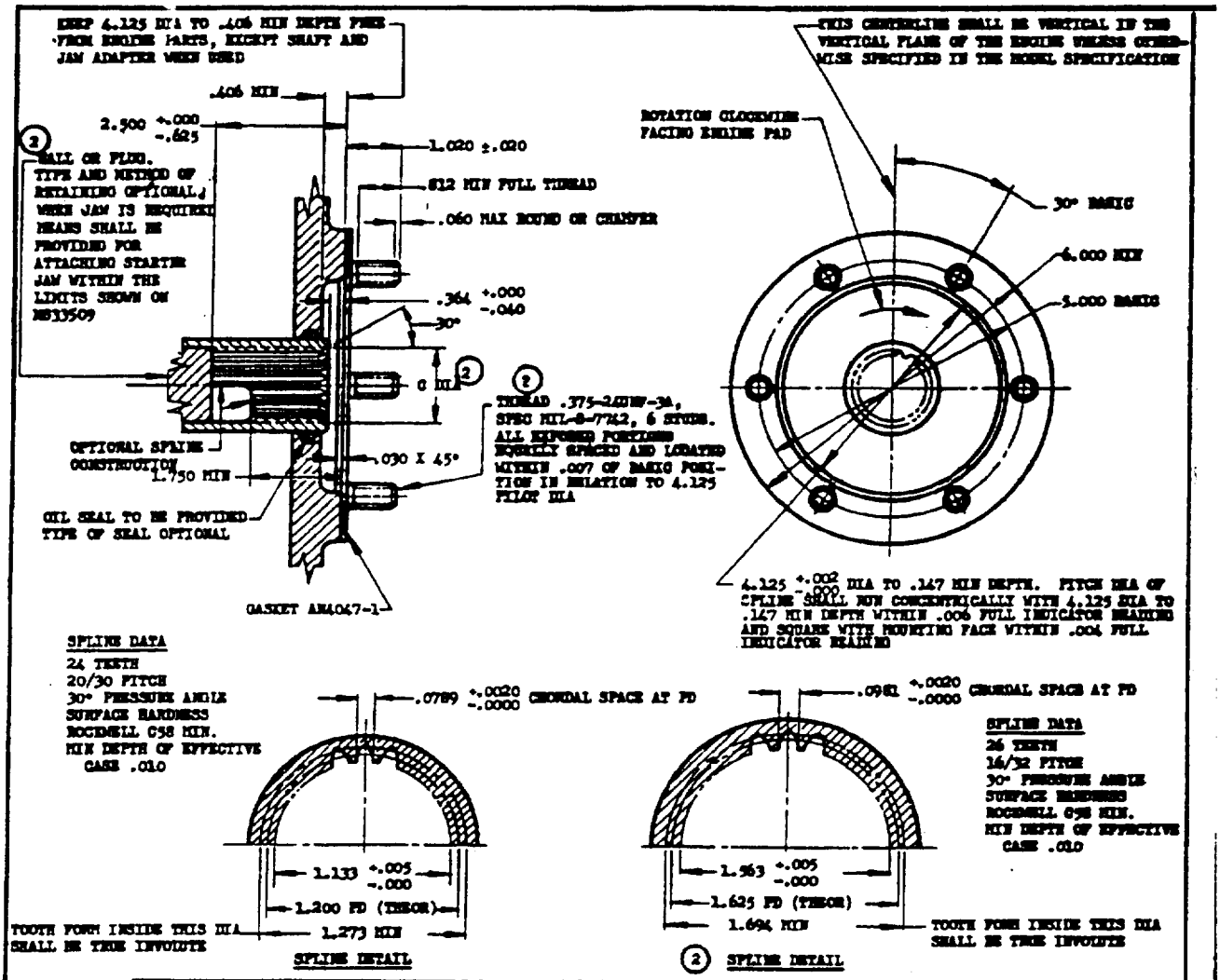

SPEED, STRENGTH, ACCESSORY DATA, AND USE								
TYPE	SPLINE PD	STRENGTH	(a) "S" SPEED RPM	ACCESSORY WEIGHT LB MAX	OVERHUNG MOMENT LB-IN. MAX	NOMINAL USE	TYPE OF ENGINE	C CHAMFER DIA
XII-8	1.200	(b)	3300 ±300	75	625	STARTER	TURBOJET AND TURBOPROP	1.250
XII-9	1.625	(a)	3300 ±300	75	625	STARTER		1.656

(a) SPEED: "S" SPEED IS THE DRIVE SHAFT SPEED ABOVE WHICH THE ENGINE SHALL ACCELERATE TO IDLE SPEED WITHIN FIVE (5) SECONDS AT STATIC SEA LEVEL STANDARD CONDITIONS WITHOUT ASSISTANCE FROM THE STARTER.

(b) DESIGN STRENGTH: FOR TURBOJET ENGINES THE DRIVE SHALL BE CAPABLE OF WITHSTANDING THE MAXIMUM TORQUE EQUAL TO 2.0 TIMES THE CONSTANT TORQUE REQUIRED FOR A FIFTEEN (15) SECOND STARTING PERIOD BEGINNING AT REST AND ENDING AT DRIVE SPEED "S".

FOR TURBOPROP ENGINES THE DRIVE SHALL BE CAPABLE OF WITHSTANDING THE MAXIMUM TORQUE EQUAL TO 2.0 TIMES THE CONSTANT TORQUE REQUIRED FOR A TWENTY FIVE (25) SECOND STARTING PERIOD BEGINNING AT REST AND ENDING AT DRIVE SPEED "S".

(c) THE DRIVE SHALL BE CAPABLE OF WITHSTANDING EXTREMELY FAST STARTS AND THE STRENGTH SHALL BE AS SPECIFIED IN THE ENGINE MODEL SPECIFICATION.

JAW ADAPTER SHALL BE FURNISHED FOR CONVERTING TO A JAW TYPE DRIVE WHEN SO SPECIFIED IN THE ENGINE MODEL SPECIFICATION. WHEN FURNISHED, THE JAW CONFIGURATION AND INSTALLATION SHALL BE AS SHOWN ON DRAWING MS33509.

PAD OUTLINE AS DIMENSIONED IS A BASIC MINIMUM AREA REQUIREMENT.

THE OIL LEAKAGE OUT OF THIS DRIVE SHALL NOT EXCEED 200 PER HOUR. OVERBOARD DRAINS PERMITTED.

ACCESSORY CLEARANCE SHALL BE PROVIDED IN ACCORDANCE WITH MANUFACTURER'S MODEL SPECIFICATION.

REMOVE ALL BURRS AND SHARP EDGES.

DIMENSIONS IN INCHES. UNLESS OTHERWISE SPECIFIED, TOLERANCES: DECIMALS ±.010, ANGLES ±2°.

THIS DRAWING AND THE APPLICABLE ENGINE SPECIFICATIONS, TOGETHER, COMPLETELY DEFINE THE DESIGN REQUIREMENTS.

APPROVED 14 Feb 51 REVISED (1) 17 Jan 52 (2) 4 Mar 53

AIR FORCE-NAVY AERONAUTICAL DESIGN STANDARD

DRIVE - TYPE XII ENGINE ACCESSORY

AND20002

SHEET 3 OF 3

NOT A PART NUMBER