Downloaded from http://www.everyspec.com

AN 116925 THRU AN 116960

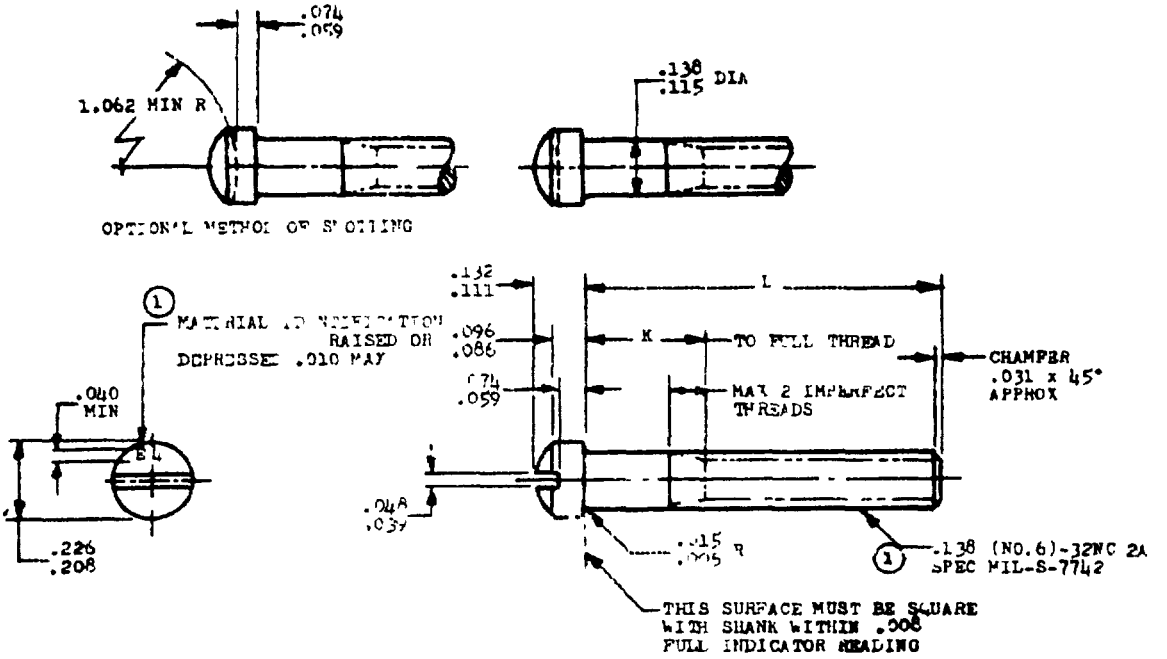

L	K + .000 − .060	PART NO.	L	K + .000 − .060	PART NO.	L	K + .000 − .060	PART NO.
			.938	(a)	AN116937	2.750	1.500	AN116952
.250	(a)	AN116926	1.000	(a)	AN116938	3.000	1.750	AN116954
.312	(a)	AN116927	1.125	(a)	AN116939			
.375	(a)	AN116928	1.250	(a)	AN116940			
.438	(a)	AN116929	1.375	.125	AN116941			
.500	(a)	AN116930	1.500	.250	AN116942			
.562	(a)	AN116931	1.625	.375	AN116943			
.625	(a)	AN116932	1.750	.500	AN116944			
.688	(a)	AN116933	1.875	.625	AN116945			
.750	(a)	AN116934	2.000	.750	AN116946			
.812	(a)	AN116935	2.250	1.000	AN116948			
.875	(a)	AN116936	2.500	1.250	AN116950			

(a) THREAD TO HEAD. MAX TWO IMPERFECT THREADS

NOTE: (1) SHANK SHALL BE STRAIGHT WITHIN .004 FIR PER INCH OF SCREW LENGTH. THE CONCENTRICITY OF THREAD PD IN RELATION TO THE HEAD SHALL BE WITHIN .005 FIR.

MATERIAL. STEEL AMS 5061

STRESS RELIEVE AFTER HEADING. MATERIAL SPECIFICATION HARDNESS REQUIREMENTS MUST BE MAINTAINED.

FINISH. CADMIUM PLATE AMS 2400

BREAK SHARP EDGES .003-.015 UNLESS OTHERWISE SPECIFIED

DIMENSIONS IN INCHES. UNLESS OTHERWISE SPECIFIED, TOLERANCES, LINEAR DIMENSIONS ± .010.

DO NOT USE UNASSIGNED PART NUMBERS.

THIS STANDARD WAS DEVELOPED COOPERATIVELY WITH THE ENGINE AND PROPELLER UTILITY PARTS COMMITTEE OF THE SAE

APPROVED 1 Jul 49 REVISED (1) 11 Dec 54

PROCUREMENT SPECIFICATION	AIR FORCE-NAVY AERONAUTICAL STANDARD	AN 116925 THRU AN 116960
	SCREW-OVAL FILLISTER HEAD, .138-32 (1)	