Downloaded from http://www.everyspec.com

AN 116901 THRU AN 116912

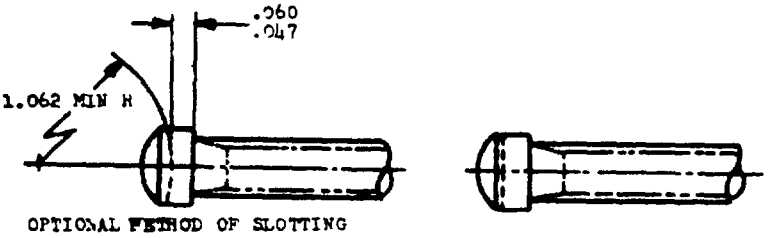


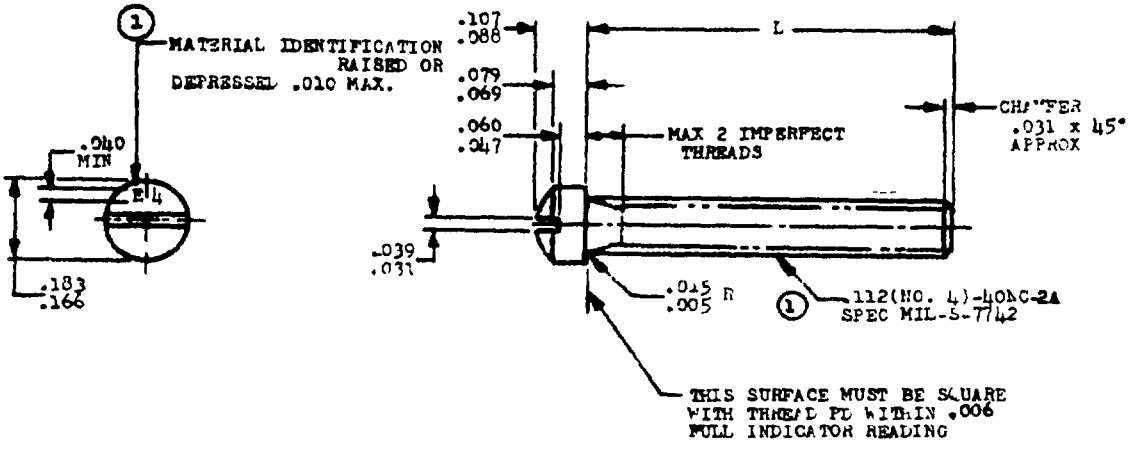


| L | PART NO. | L | PART NO. |
|---|---|---|---|
| .250 | AN116902 | .562 | AN116907 |
| .312 | AN116903 | .625 | AN116908 |
| .375 | AN116904 | .688 | AN116909 |
| .438 | AN116905 | .750 | AN116910 |
| .500 | AN116906 | | |

NOTE: (1) THE CONCENTRICITY OF THREAD PD IN RELATION TO THE HEAD SHALL BE WITHIN .005 FIM.

MATERIAL: STEEL AMS 5061

STRESS RELIEVE AFTER HEADING. MATERIAL SPECIFICATION HARDNESS REQUIREMENTS MUST BE MAINTAINED.

FINISH: CADMIUM PLATE AMS 2400

BREAK SHARP EDGES .003-.015 UNLESS OTHERWISE SPECIFIED.

DIMENSIONS IN INCHES. UNLESS OTHERWISE SPECIFIED TOLERANCES, LINEAR DIMENSIONS ± .010.

DO NOT USE UNASSIGNED PART NUMBERS

APPROVED 1 Jul 49 REVISED (1) 14 Dec 54

THIS STANDARD WAS DEVELOPED COOPERATIVELY WITH THE ENGINE AND PROPELLER UTILITY PARTS COMMITTEE OF THE SAE

| PROCUREMENT SPECIFICATION | AIR FORCE-NAVY AERONAUTICAL STANDARD | AN 116901 THRU AN 116912 |
|---|---|---|
| | SCREW-OVAL FILLISTER HEAD, .112-40 (1) | |