Downloaded from http://www.everyspec.com

FED SUP CLASS
5305

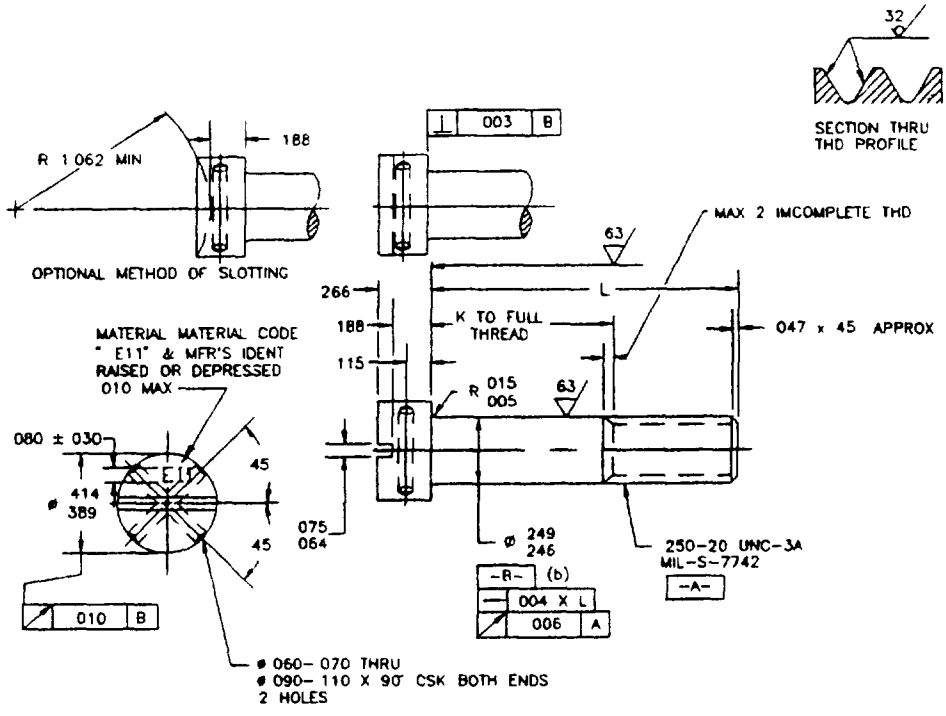

PART NO	L	K	PART NO	L	K + 000 − 060	PART NO	L	K + 000 − 060
AN115855	375	(a)	AN115867	1 125	375	AN115879	2 000	1 250
AN115856	438	(a)	AN115868	1 188	438	AN115880	2 125	1 375
AN115857	500	(a)	AN115869	1 250	500	AN115881	2 250	1 500
AN115858	562	(a)	AN115870	1 312	562	AN115882	2 375	1 625
AN115859	625	(a)	AN115871	1 375	625	AN115883	2 500	1 750
AN115860	688	(a)	AN115872	1 438	688	AN115884	2 625	1 875
AN115861	750	(a)	AN115873	1 500	750	AN115885	2 750	2 000
AN115862	812	(a)	AN115874	1 562	812	AN115886	2 875	2 125
AN115863	875	125	AN115875	1 625	875	AN115887	3 000	2 250
AN115864	938	188	AN115876	1 688	938			
AN115865	1 000	250	AN115877	1 750	1 000			
AN115866	1 062	312	AN115878	1 875	1 125			

(a) THREAD TO HEAD IN ACCORDANCE WITH AS3062
(b) FOR AN115855 THRU AN115865, DATUM A SHALL REPLACE DATUM B

INCH-POUND

③ ENTIRE STANDARD REVISED

THIS STANDARD WAS DEVELOPED COOPERATIVELY WITH THE ENGINE AND PROPELLER STANDARDS PARTS COMMITTEE OF THE SAE

APPROVED 8 JUNE 1949 REVISED ① 4 OCT 1954 ② 03 JUNE 1986 ③ 21 OCT 1994

P.A. DLA-IS Other Cust AS AV, 11	AIR FORCE - NAVY AERONAUTICAL STANDARD	AN115851 THRU AN115900
	SCREW - FLAT FILLISTER, DRILLED HEAD, .250-20	
PROCUREMENT SPECIFICATION	SUPERSEDES	SHEET 1 OF 2

PREVIOUS EDITIONS OF THIS FORM ARE OBSOLETE

PROJECT NO 5305-2041

REVIEWER SYMBOLS

NOTICE When Government drawings specifications or other data are used for any purpose other than in connection with a definitely related Government procurement operation, the United States Government thereby incurs no responsibility, nor any obligation whatsoever and the fact that the Government may have formulated, furnished, or in any way supplied the said drawings, specifications or any other data is not to be regarded by implication or otherwise as in any manner licensing the holder or any other person or corporation, or conveying any rights or permission to manufacture use or sell any patented invention that may in any way be related thereto

DISTRIBUTION STATEMENT A APPROVED FOR PUBLIC RELEASE, DISTRIBUTION IS UNLIMITED
NOTE This drawing was approved by joint action of the Air Force and Navy Departments as the Air Force-Navy standard for this product. This drawing supersedes all embodied standard drawings for the same product and shall become effective for the procurement of commercial supplies, or for use in new design not later than 6 months after the latest date of approval shown

AMSC N/A

Downloaded from http://www.everyspec.com

FED SUP CLASS
5305

REQUIREMENTS

1 MATERIAL STEEL AMS 6322 (UNS G87400) MATERIAL CODE PER AS269

2 HARDNESS 26-32 HRC

3 INSPECTION MAGNETIC PARTICLE INSPECTION PER AMS 2640 ACCEPTANCE CRITERIA PER AS7452

4 FINISH CADMIUM PLATE PER AMS 2400

5 SURFACE TEXTURE SYMBOLS PER ANSI Y14 36 REQUIREMENTS PER ANSI/ASME B46 1
UNLESS OTHERWISE SPECIFIED SURFACES TO BE 125 MICROINCHES Ra

6 EDGES BREAK EDGES 003-015 UNLESS OTHERWISE SPECIFIED

7 DIMENSIONING AND TOLERANCING ANSI Y14 5M

8 TOLERANCES UNLESS OTHERWISE SPECIFIED LINEAR DIMENSIONS ± 010 ANGULAR DIMENSIONS ±2°

9 PROCUREMENT SPECIFICATION AS7452

NOTES

1 DIMENSIONS IN INCHES

2 DO NOT USE UNASSIGNED PART NUMBERS

3 IN THE EVENT OF A CONFLICT BETWEEN THE TEXT OF THIS DOCUMENT AND THE REFERENCES CITED HEREIN, THE TEXT OF THIS DOCUMENT SHALL TAKE PRECEDENCE

4 UNLESS OTHERWISE SPECIFIED ISSUES OF REFERENCED DOCUMENTS ARE THOSE IN EFFECT AT THE TIME OF SOLICITATION

③ ENTIRE STANDARD REVISED

THIS STANDARD WAS DEVELOPED COOPERATIVELY WITH THE ENGINE AND PROPELLER STANDARDS PARTS COMMITTEE OF THE SAE

APPROVED 8 JUNE 1949 REVISED ① 4 OCT 1954 ② 03 JUNE 1988 ③ 21 OCT 1994

P.A. DLA-IS Other Cust AS, AV, 11	AIR FORCE - NAVY AERONAUTICAL STANDARD SCREW - FLAT FILLISTER, DRILLED HEAD 250-20	AN115851 THRU AN115900
PROCUREMENT SPECIFICATION	SUPERSEDES	SHEET 2 OF 2

PREVIOUS EDITIONS OF THIS FORM ARE OBSOLETE

PROJECT NO 5305-2041

AMSC N/A

DISTRIBUTION STATEMENT A APPROVED FOR PUBLIC RELEASE, DISTRIBUTION IS UNLIMITED

NOTICE When Government drawings, specifications or other data are used for any purpose other than in connection with a definitely related Government procurement operation, the United States Government thereby incurs no responsibility nor any obligation whatsoever; and the fact that the Government may have formulated, furnished, or in any way supplied the said drawings, specifications or any other data is not to be regarded by implication or otherwise as in any manner licensing the holder or any other person or corporation or conveying any rights or permission to manufacture, use or sell any patented invention that may in any way be related thereto

REVIEWER SYMBOLS