Downloaded from http://www.everyspec.com

FED. SUP CLASS.

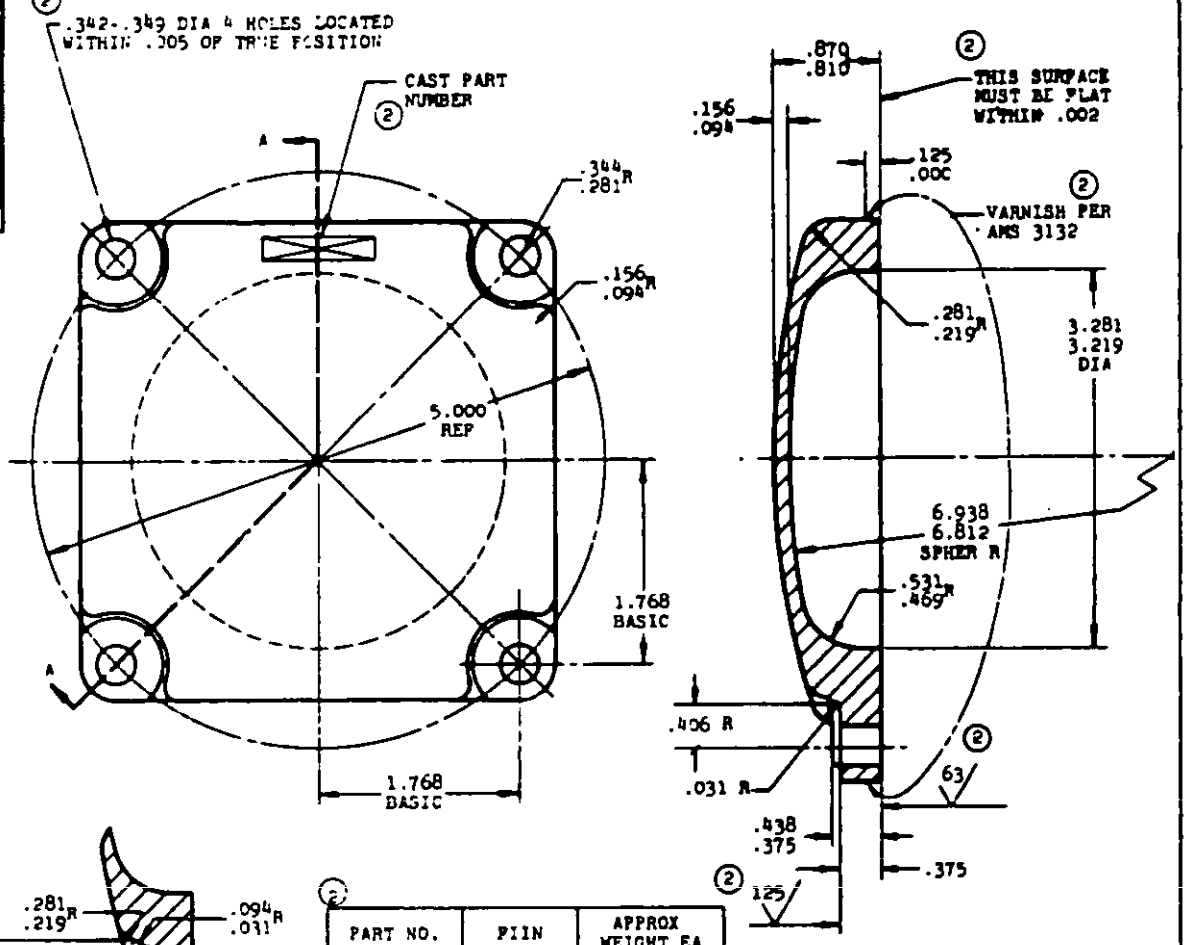

(2)

PART NO.	FIIN	APPROX WEIGHT EA
AN100036		.410

MATERIAL: MAGNESIUM AMS 4424 OR AMS 4484

(2) PARTING LINES OF CASTINGS ARE TO BE COMMERCIALLY CLEAN.

(2) SURFACE ROUGHNESS: AS 291 UNSPECIFIED SURFACES AS CAST.

MACHINED PARTS SUBJECT TO FLUORESCENT PENETRANT INSPECTION PER AMS 2645

(2) FINISH: AMS 2510 UNLESS OTHERWISE SPECIFIED.

CASTING IDENTIFICATION: AMS 2804

BREAK SHARP EDGES .003-.015 UNLESS OTHERWISE SPECIFIED.

DIMENSIONS IN INCHES. UNLESS OTHERWISE SPECIFIED: TOLERANCES; LINEAR DIMENSIONS ±.010.

COVERS SUITABLE FOR FLIGHT, SHIPMENT AND STORAGE.

APPROVED 9 FEB 50 REVISED (1) 16 Dec 54 (2) 8 Jan 58

THIS STANDARD WAS DEVELOPED COOPERATIVELY WITH THE ENGINE AND PROPELLER UTILITY PARTS COMMITTEE OF THE SAE.

PROCUREMENT SPECIFICATION

AIR FORCE-NAVY AERONAUTICAL STANDARD

COVER-TYPE XI ENGINE ACCESSORY DRIVE

AN100036