Downloaded from http://www.everyspec.com

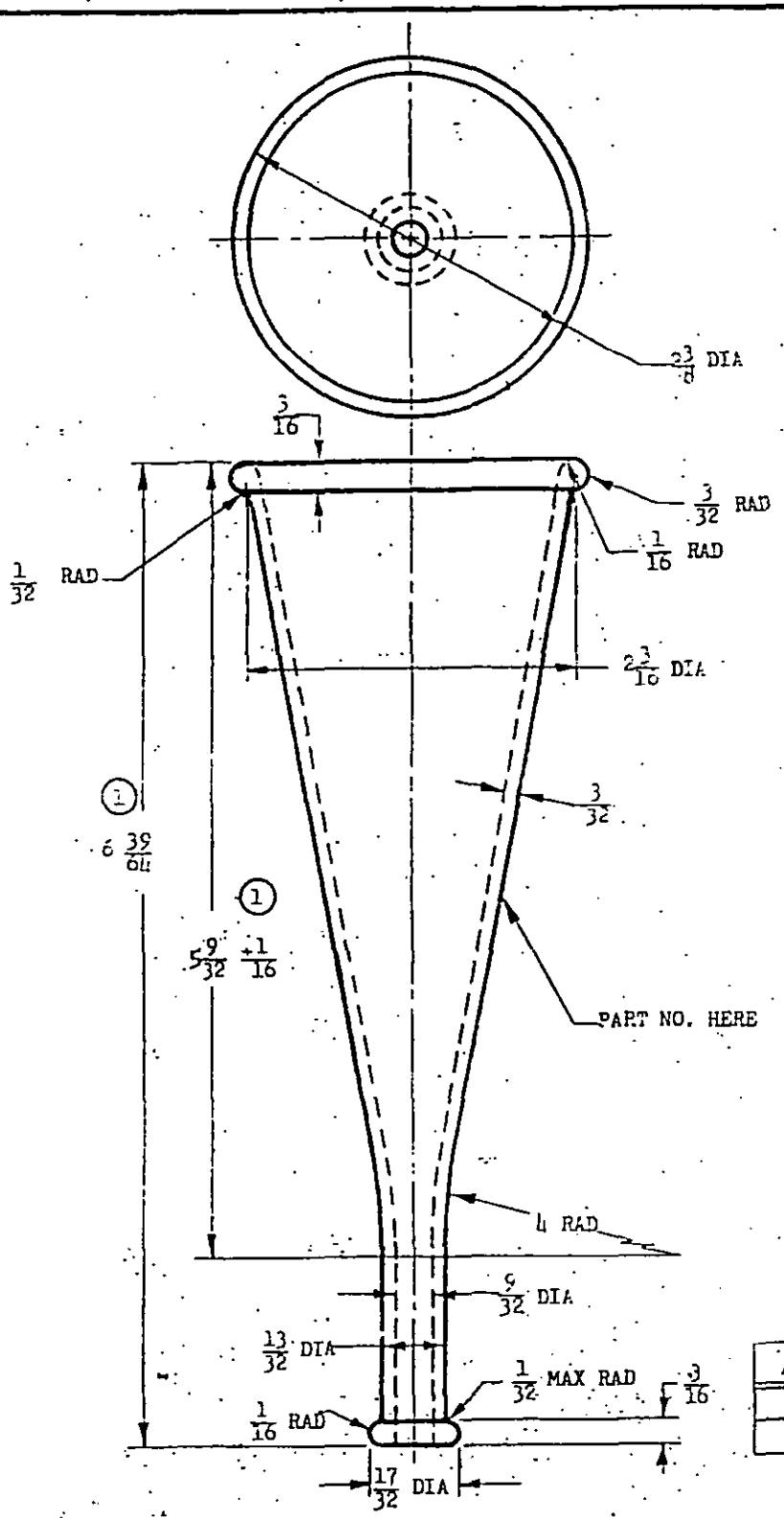

AN PART NO.
AN8018-1

MATERIAL: COMMERCIAL PLASTIC - MUST BE EQUAL TO AND INTERCHANGEABLE WITH LUMARITH X-T-13507 MH, COLOR NO. O-2165-A. CELANESE CELLULOID CORPORATION, NEW YORK, N. Y., OR TENITE II, 201A961MS TENNESSEE EASTMAN CORPORATION, KINGSPORT, TENNESSEE.

REMOVE ALL BURRS AND SHARP EDGES.

(1) DIMENSIONS IN INCHES. UNLESS OTHERWISE SPECIFIED, TOLERANCES: FRACTIONS ±1/32.

APPROVED 21 Feb 45 REVISED (1) 2 Sept 54

PROCUREMENT SPECIFICATION	AIR FORCE-NAVY AERONAUTICAL STANDARD	AN8018
NONE	HORN, FLYER'S RELIEF TUBE	

SUPERSEDES USAF DRAWING 42A6504

NOTICE—When Government drawings, specifications, or other data are used for any purpose other than in connection with a definitely related Government procurement operation, the United States Government thereby incurs no responsibility, nor any obligation whatsoever; and the fact that the Government may have formulated, furnished, or in any way supplied the said drawings, specifications, or other data is not to be regarded by implication or otherwise as in any manner licensing the holder or any other person or corporation, or conveying any rights or permission to manufacture, use, or sell any patented invention that may in any way be related thereto.

NOTE—This drawing was approved by joint action of the Air Force and Navy Departments as the Air Force-Navy standard for this product. This drawing supersedes all antecedent standard drawings for the same product and shall become effective for the procurement of aeronautical supplies, or for use in new design, not later than six months after the latest date of approval shown.