Downloaded from http://www.everyspec.com

FSC 2915

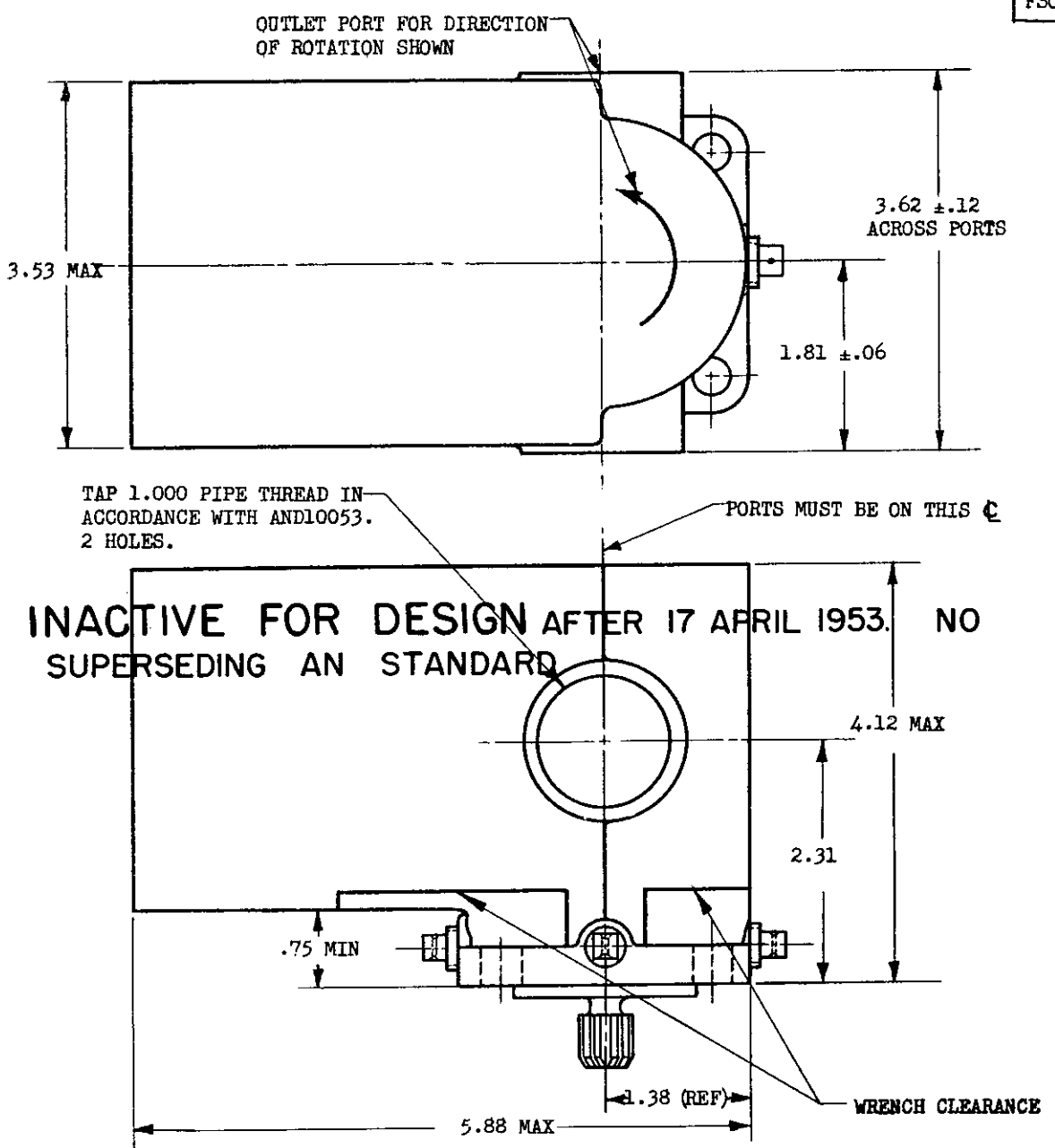

INACTIVE FOR DESIGN AFTER 17 APRIL 1953. NO SUPERSEDING AN STANDARD

④ CANCELED AFTER 9 AUGUST 1965. USE MS29587.

AN PART NO
(a) AN4102-1

(a) PREVIOUS PART NO. AN4102 INACTIVE FOR NEW DESIGN

DIMENSIONS IN INCHES. UNLESS OTHERWISE SPECIFIED, TOLERANCE: TWO PLACE DECIMALS ±.02, THREE PLACE ±.010.

THIS DRAWING AND THE SPECIFICATION COMPLEMENT ONE ANOTHER, AND, TOGETHER, COMPLETELY DEFINE THIS PRODUCT.

FOR DEFINITION AND APPLICATION OF DRAWING STATUS NOTE SEE ANA BULLETIN NO. 337

APPROVED 24 Sep 41 REVISED ① 13 Mar 44 ② 29 Jun 45 ③ 17 Apr 53 ④ 9 Aug 65

PROCUREMENT SPECIFICATION	ARMY-NAVY AERONAUTICAL STANDARD	AN4102
AN-P-57	PUMP - 700 G.P.H. POWER DRIVEN FUEL	

NOTE: This drawing was approved by joint action of the War and Navy Departments as the Army-Navy drawing for this product. This drawing supersedes all antecedent standard drawings for the product and shall become effective for the procurement of aeronautical supplies, or for use in new design, not later than six months after the latest date of approval shown. It may be put into effect, however, at an earlier date after promulgation.

NOTICE: Government drawings, specifications, or other data are used for any purpose other than in connection with a definitely related Government procurement operation, the United States Government thereby incurs no responsibility, nor any obligation whatsoever; and the fact that the Government may have formulated, furnished, or in any way supplied the said drawings, specifications, or other data is not to be regarded by implication or otherwise as in any manner licensing the holder or any other person or corporation, or conveying any rights or permission to manufacture, use, or sell any patented invention that may in any way be related thereto.