Downloaded from http://www.everyspec.com

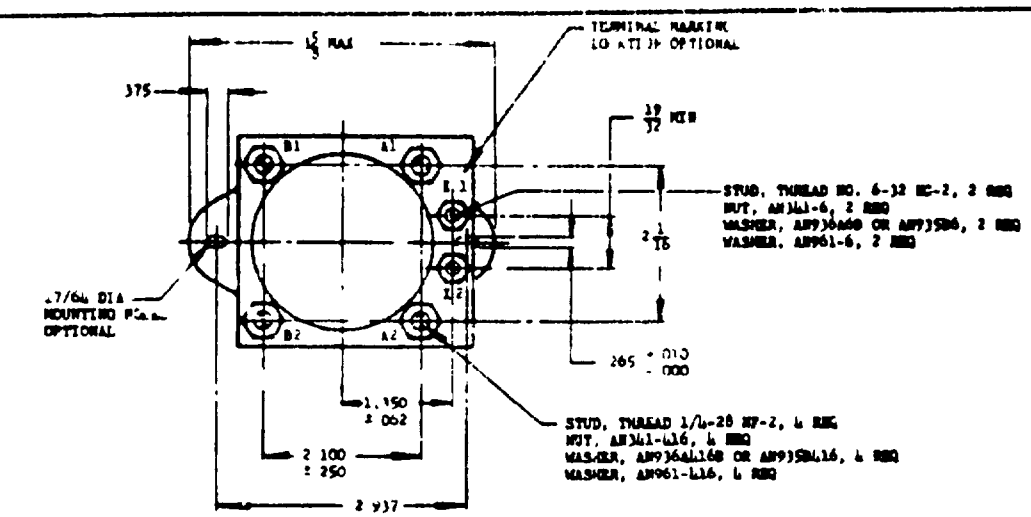

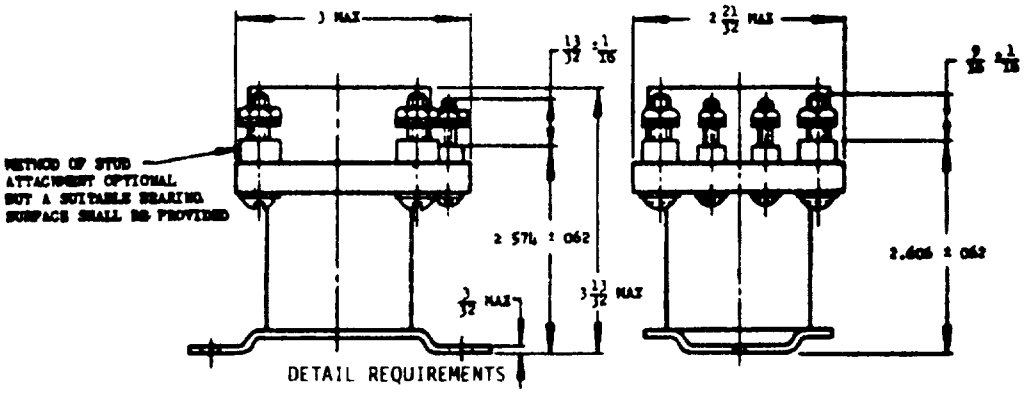

DETAIL REQUIREMENTS

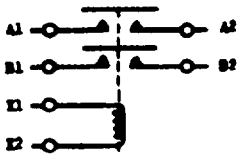

CIRCUIT

AN PART NO
AN3362-1

(A)	Maximum operating voltage	29 volts
(B)	Pickup voltage	20 volts
(C)	Dropout voltage	7 volts +0, -5 5
(D)	Rated load (Per pole)	
	Resistive (DC)	100 amp
	Resistive (AC 400-cycles, 115 volts)	75 amp
	Inductive	80 amp
	Motor (DC)	80 amp
	Motor (AC 400-cycles, 115 volts)	65 amp
(E)	Coil current	0 6 amp
(F)	Minimum operating period	3 hours
(G)	Minimum operating cycles	50,000
(H)	Maximum weight	1 5 pounds
(I)	Rated duty	Continuous
(J)	Nominal coil voltage	28 volts

For resistive load tests, one set of contacts shall be tested with rated resistive DC load and the other set of contacts shall be tested with rated resistive AC load

Dimensions in inches Unless otherwise specified, tolerances Fractions ±1/32, decimals ± 010

Coil temperature rise and contact drop of specification MIL-R-6106 are not applicable

For definition and application of drawing status notes, see A.. Bulletin No 337

(5) INACTIVE FOR NEW DESIGN AFTER 30 AUGUST 1957

APPROVED April 1 REVISED (5) 2 APRIL 1966

P A USAF-85

Other Cust

Procurement Specification
MIL-R-6106

AIR FORCE-NAVY AERONAUTICAL STANDARD

RELAY, 100 AMP, 2PST, UNSEALED, CLASS O

AN3362

5945-0415

U S GOVERNMENT PRINTING OFFICE 1976 803 766/3622

This military standard is approved for use by all Departments and Agencies of the Department of Defense. Selection for all new engineering and design applications and for repetitive use shall be made from this document

Revision letter AF-80