Downloaded from http://www.everyspec.com

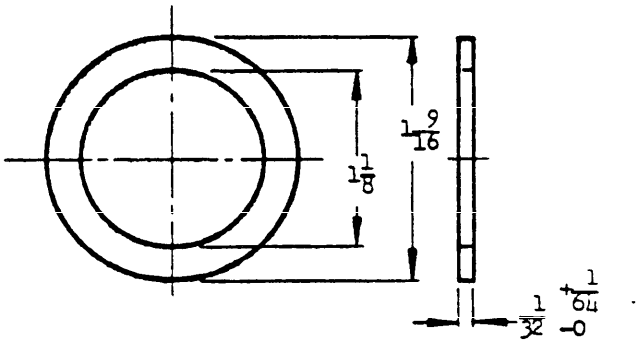

AN PART NO.
(a) ~~AN3119-1~~
(2) AN3119-2

(2) (a) PREVIOUS PART NO. AN3119-1 INACTIVE FOR DESIGN AFTER 31 JANUARY 1951. PART NO. AN3119-2 REPLACES AND IS INTERCHANGEABLE WITH PART NO. AN3119-1.

(2) FOR DEFINITION AND APPLICATION OF DRAWING STATUS NOTES, SEE ANA BULLETIN NO. 337.

(2) MATERIAL: VELLUMOID COMPANY MATERIAL NO. 570-1, OR EQUAL.

DIMENSIONS IN INCHES. UNLESS OTHERWISE SPECIFIED, TOLERANCES: FRACTIONS ±1/64.

APPROVED 10 Dec 47 REVISED (1) 14 May 48 (2) 31 Jan 51

PROCUREMENT SPECIFICATION	AIR FORCE-NAVY AERONAUTICAL STANDARD	AN3119
None	(2) GASKET - COMMON, TAIL POSITION LIGHT	

NOTICE—When Government drawings, specifications, or other data are used for any purpose other than in connection with a definitely related Government procurement operation, the United States Government thereby incurs no responsibility, nor any obligation whatsoever; and the fact that the Government may have formulated, furnished, or in any way supplied the said drawings, specifications, or other data is not to be regarded by implication or otherwise or in any manner licensing the holder or any other person or corporation, or conveying any rights or permission to manufacture, use, or sell any patented invention that may in any way be related thereto.

NOTE—This drawing was approved by joint action of the Air Force and Navy Departments as the Air Force-Navy standard for this product. This drawing supersedes all antecedent standard drawings for the same product and shall become effective for the procurement of aeronautical supplies, or for use in new design, not later than six months after the latest date of approval shown.