Downloaded from http://www.everyspec.com

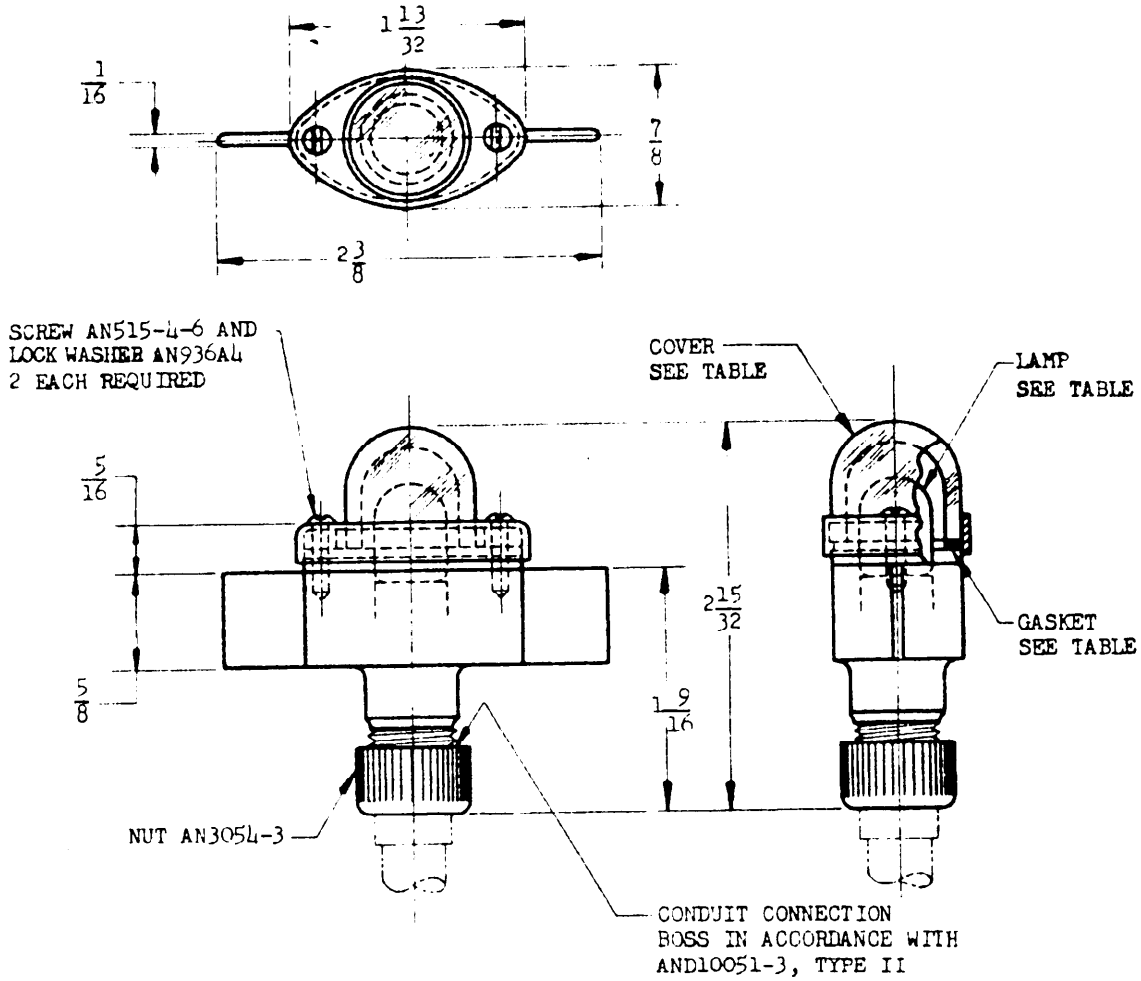

AN ASSY PART NO.		LAMP		COVER		GASKET AN PART NO.
WITH LAMP AND COVER	WITHOUT LAMP AND COVER	AN PART NO.	VOLTAGE	AN PART NO.	COLOR	
(a) ~~AN3091-1~~	AN3091-3	~~AN3121-1816~~	~~13~~	~~AN3093-1~~	~~AVIATION "WHITE"~~	~~AN898-1~~
AN3091-2		AN3121-313	28	AN3093-1	AVIATION "WHITE"	AN898-1
AN3091-4		AN3143-1839	6.3	AN3093-1	AVIATION "WHITE"	AN898-2

(a) PART NUMBER AN3091-1 INACTIVE FOR DESIGN AFTER 16 JUNE 1947.

(5) FOR DEFINITION AND APPLICATION OF DRAWING STATUS NOTE SEE ANA BULLETIN NO. 337.

WEIGHT: 0.20 MAX LB.

DIMENSIONS IN INCHES. DIMENSIONS ARE FOR REFERENCE ONLY.

THIS DRAWING IS FOR REFERENCE AND STOCK PURPOSES ONLY. FOR MANUFACTURING DETAILS SEE THE AN AERO STD ISSUE OF DRAWING NAF311164.

FOR ACCEPTABLE PRODUCTS, SEE ANA BULLETIN NO. 186.

APPROVED 25 Jun 42 REVISED (1) 20 Sep 43 (2) 5 Jun 45 (3) 1 Apr 46 (4) 16 Jun 47 (5) 3 Feb 49

PROCUREMENT SPECIFICATION	AIR FORCE-NAVY AERONAUTICAL STANDARD	AN3091
AN-L-12	(5) LIGHT ASSEMBLY - EXTERIOR, EDGE MOUNTING	

NOTICE: When Government drawings, specifications, or other data are used for any purpose other than in connection with a definitely related Government procurement operation, the United States Government thereby incurs no responsibility, nor any obligation whatsoever; and the fact that the Government may have formulated, furnished, or in any way supplied the said drawings, specifications, or other data is not to be regarded by implication or otherwise as in any manner licensing the holder or any other person or corporation, or conveying any rights or permission to manufacture, use, or sell any patented invention that may in any way be related thereto.

AIR FORCE
NOTE: This drawing was approved by joint action of the [redacted] and Navy Departments as the [redacted]-Navy standard for this product. This drawing supersedes all antecedent standard drawings for the same product and shall become effective for the procurement of aeronautical supplies, or for use in new design, not later than six months after the latest date of approval shown. It may be put into effect, however, at an earlier date after promulgation.