Downloaded from http://www.everyspec.com

INCH-POUND

AN929 Rev 13
w/AMENDMENT 1
20 November 2013
SUPERSEDING
AN929 Rev 13
6 February 2013

DETAIL SPECIFICATION SHEET

CAP INSERT, ASSEMBLY, PRESSURE SEAL, FLARED TUBE FITTING

This specification is approved for use by all Departments and Agencies of the Department of Defense.

The requirements for acquiring the product described herein shall consist of this specification sheet and SAE-AS4841.

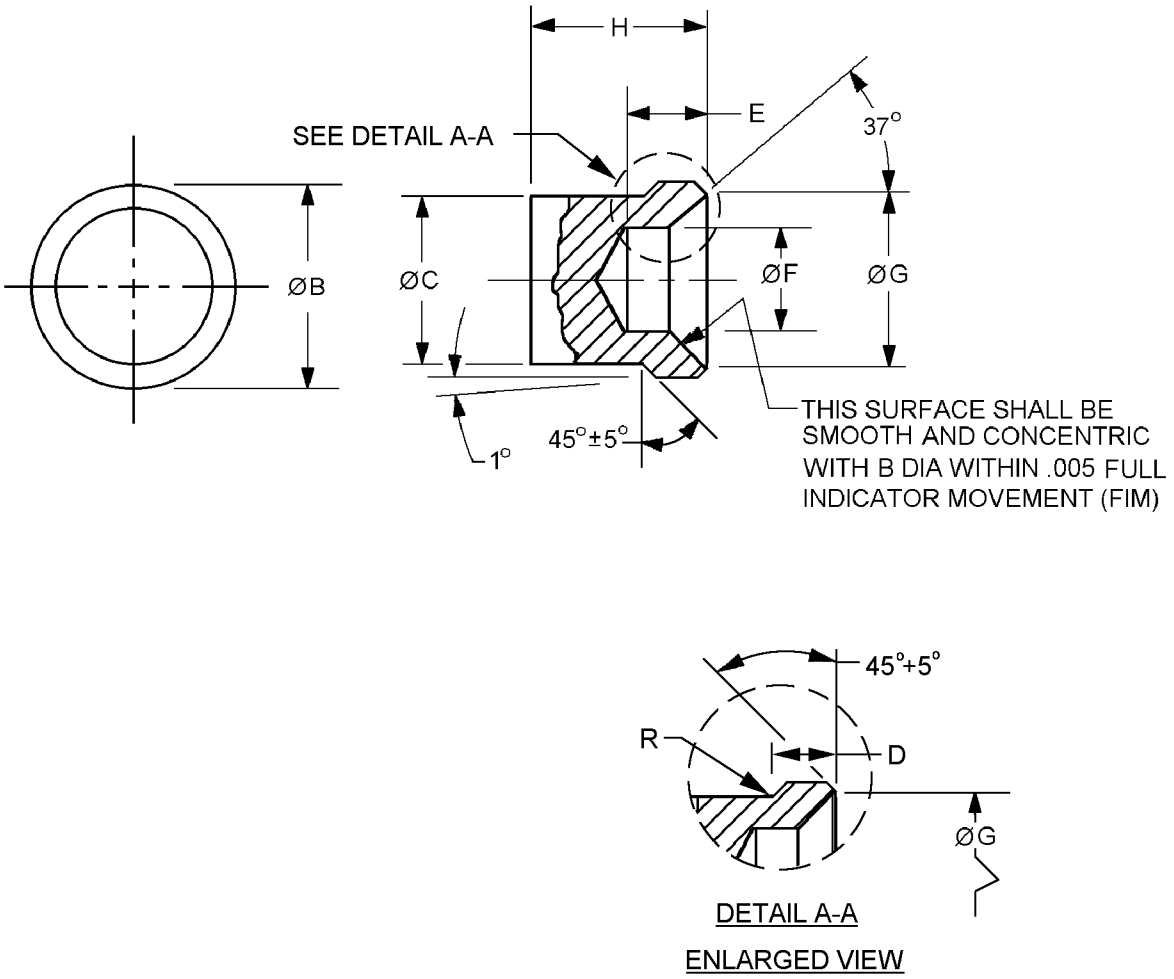

FIGURE 1. Cap assembly, dimensions and configurations.

AMSC N/A FSC 4730

Downloaded from http://www.everyspec.com

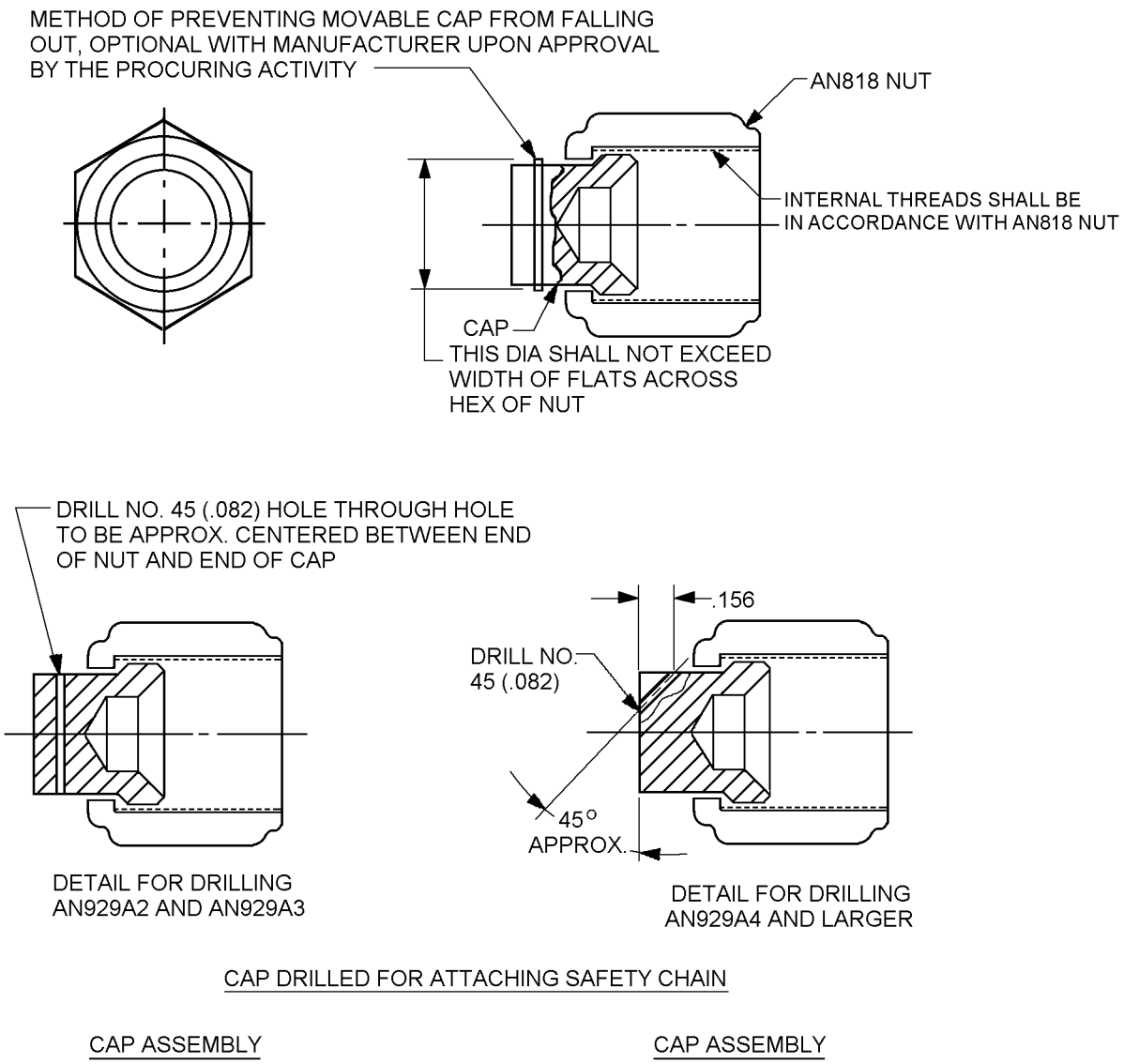

Inches	mm
.005	0.13
.082	2.08
.156	3.96

FIGURE 1. Cap assembly, dimensions and configurations – Continued.

Downloaded from http://www.everyspec.com

Dash number	Tube OD inches (mm)	B dia inches (mm) +.000 -.003 (0.08)	C dia. inches (mm)	D inches (mm)	E inches (mm)
-2	.125 (3.18)	.263 (6.68)	.156 (3.96)	.156 (3.96)	.125 (3.18)
-3	.188 (4.78)	.325 (8.26)	.219 (5.56)	.219 (5.56)	
-4	.250 (6.35)	.378 (9.60)	.281 (7.14)	.203 (5.16)	
-5	.313 (7.95)	.441 (11.20)	.344 (8.78)	.219 (5.56)	.141 (3.58)
-6	.375 (9.53)	.503 (12.78)	.422 (10.72)	.266 (6.76)	.156 (3.96)
-8	.500 (12.70)	.683 (17.35)	.547 (13.89)	.313 (7.95)	.172 (4.37)
-10	.625 (15.88)	.799 (20.29)	.672 (17.07)	.281 (7.14)	.250 (6.35)
-12	.750 (19.05)	.974 (24.74)	.813 (20.65)		.313 (7.95)
-16	1.000 (25.40)	1.224 (31.09)	1.063 (27.00)	.297 (7.54)	
-20	1.250 (31.75)	1.536 (39.01)	1.328 (33.73)	.375 (9.53)	
-24	1.500 (38.10)	1.786 (45.36)	1.594 (40.49)	.406 (10.31)	.375 (9.53)
-28	1.750 (44.45)	2.161 (54.89)	1.875 (47.63)	.500 (12.70)	
-32	2.000 (50.80)	2.411 (61.24)	2.141 (54.38)	.578 (14.68)	.500 (12.70)
-40	2.500 (63.50)	2.911 (73.94)	2.641 (67.08)	.625 (15.88)	.688 (17.48)
-48	3.000 (76.20)	3.411 (86.64)	3.156 (80.16)	.688 (17.48)	

Dash number	F dia.	G dia inches (mm) +.000 -.005 (0.13)	H inches (mm)	R radius max inches (mm)
-2	.094 (2.39)	.218 (5.54)	.531 (13.49)	.005 (0.13)
-3	.156 (3.96)	.250 (6.35)		
-4	.172 (4.37)	.300 (7.62)		
-5	.234 (5.94)	.360 (9.14)	.563 (14.30)	
-6	.297 (7.54)	.440 (11.18)	.625 (15.88)	.010 (0.25)
-8	.391 (9.93)	.575 (14.61)	.750 (19.05)	
-10	.438 (11.13)	.685 (17.40)		
-12	.563 (14.30)	.885 (22.48)	.875 (22.23)	
-16	.813 (20.65)	1.103 (28.02)		
-20	1.078 (27.38)	1.413 (35.89)	1.000 (25.40)	
-24	1.313 (33.35)	1.661 (42.19)	1.125 (28.58)	
-28	1.547 (39.29)	2.034 (51.66)	1.375 (34.93)	.015 (0.38)
-32	1.781 (45.24)	2.284 (58.01)	1.438 (36.53)	
-40	2.000 (50.80)	2.784 (70.71)	1.750 (44.45)	
-48	2.500 (63.50)	3.284 (83.41)	1.813 (46.05)	

NOTES:
1. Dimensions are in inches.
2. Metric equivalents are given for information only.
3. Fittings shall be free of all burrs and slivers.
4. Unless otherwise specified tolerances for three point decimals ±.010 inch (0.25 mm).
5. For design features purposes, this standard takes precedence over documents referenced herein.

FIGURE 1. Cap assembly, dimensions and configurations. - Continued.

Downloaded from http://www.everyspec.com

REQUIREMENTS:

Dimensions and configurations: See figure 1.

The part is a 2-piece assembly consisting of an AN818 nut and an insert as specified herein, see figure 1.

Material: See table I herein, procurement specification SAE-AS4841.

TABLE I. Material cap assembly.

Cap insert assembly AN929				Nut AN818 2/		
Material designator	Material	Alloy		Material designator	Material	Alloy
F	Steel	4130 or 4140		Blank	Steel	4130 or 4140
J	CRES	304		J	CRES	304
K	CRES	316		K	CRES	316
S	CRES	347		J or K	CRES	304 or 316
T 1/	Titanium	64Al-4V		T	Titanium	64Al-4V
W	Aluminum	7075-T73		W	Aluminum	7075-T73

1/ Not for use with oxygen systems.
2/ Material designator for manufacturers use only to determine proper AN818 nut to use for the cap insert assembly.

Finish: See SAE-AS4841.

Part or Identifying Number (PIN): The PIN consists of the AN prefix, specification sheet number, dash or “A” for cap drilled for safety chain, blank or “L” for nut drilled with lock wire, number for assembly size, and a letter for material designator.

AN 929 - L 8 W

- W — Material code “W” for al alloy 7075-T73 (see table I).
- 8 — Assembly size (see figure 1).
- L — Blank or “L” - drilled for lockwire.
- - — Dash “-“ or use “A” for cap drilled for use with a safety chain.
- 929 — Specification sheet number.
- AN — AN prefix

Downloaded from http://www.everyspec.com

PIN Examples:

AN929-8W identifies a cap assembly .500 inch (tube), aluminum.
AN929-L8J identifies a cap assembly .500 inch (tube), nut drilled for lockwire, CRES 304.
AN929A8S identifies a cap assembly .500 inch (tube), cap drilled for attachment of safety chain, CRES 347.
AN929AL8J identifies a cap assembly .500 inch (tube), cap drilled for use with a safety chain, and nut for lock wire, CRES 304.

Supersession data: Due to stress corrosion cracking aluminum alloys 2014 and 2024 blank designator has been replaced by aluminum alloy 7075 “W” designator example: AN929-8 use AN929-8W.

AN929 assemblies which consist of a cap and an AN818 nut shall be fastened together for shipping or stock purposes in a manner acceptable to the procuring activity.

Changes from previous issue. Marginal notations are not used in this revision to identify changes with respect to the previous issues due to the extensiveness of the changes.

Referenced documents. In addition to SAE-AS4841, this document references AN818.

CONCLUDING MATERIAL

Custodians:
Navy - AS
Air Force - 99
DLA - CC

Review activity:
Air Force - 71

Preparing activity:
DLA - CC

(Project 4730-2013-120)

NOTE: The activities listed above were interested in this document as of the date of this document. Since organizations and responsibilities can change, you should verify the currency of the information above using the ASSIST Online database at https://assist.dla.mil.