Downloaded from http://www.everyspec.com

INCH-POUND

AN849 Rev 12
7 June 2011
SUPERSEDING
AN849 Rev 11
17 May 1984

DETAIL SPECIFICATION SHEET

NIPPLE, HOSE

Reinstated after 7 June 2011. Inactive for new design.
For new design, use SAE-AS5189.

This specification is approved for use by all Departments and Agencies of the Department of Defense.

The requirements for acquiring the product described herein shall consist of this specification sheet and SAE-AS4843.

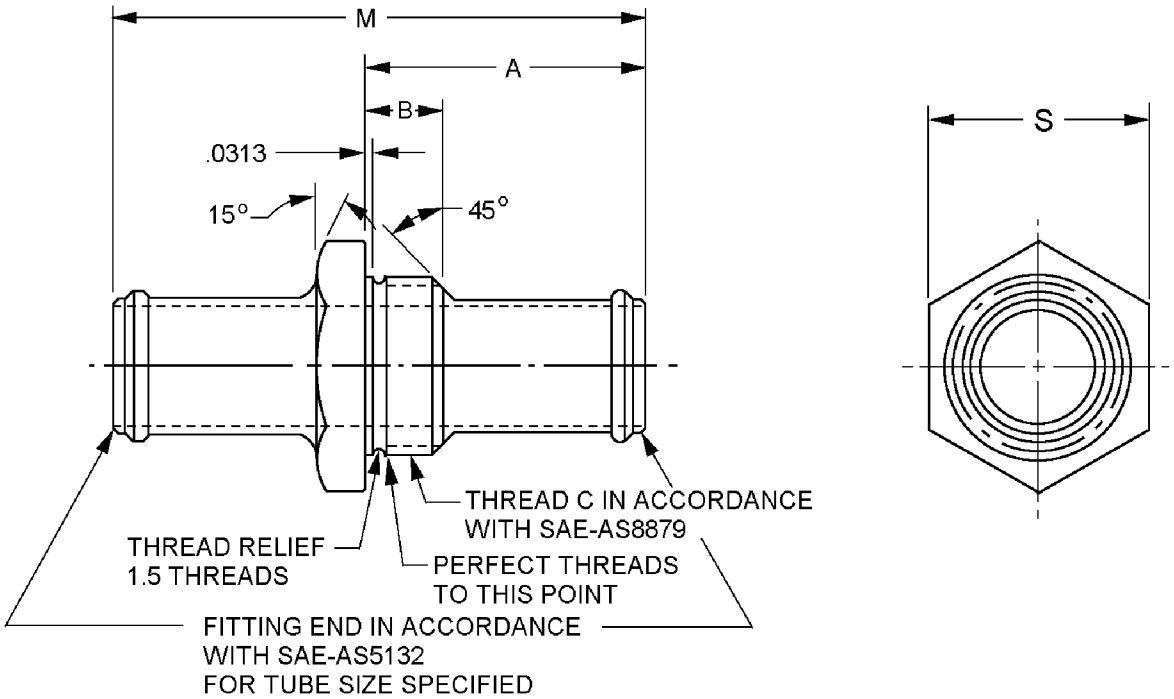

Inch	mm
.0313	0.795

FIGURE 1. Nipple dimensions and configuration.

Downloaded from http://www.everyspec.com

Dash number	Hose ID inches (mm)	A inches (mm)	B inches (mm)	Thread C Ref SAE-AS8879	M inches (mm)
4	.250 (6.35)	1.938 (49.23)	.438 (11.13)	.4375-20UNJF-3A	3.625 (92.08)
6	.375 (9.53)	1.969 (50.01)	.469 (11.91)	.5625-18UNJF-3A	3.719 (94.46)
8	.500 (12.70)	2.000 (50.80)	.500 (12.70)	.7500-16UNJF-3A	3.781 (96.04)
10	.675 (17.15)	2.031 (51.59)	.531 (13.49)	1.875 -12UNJ-3A	3.844 (97.64)
12	.750 (19.05)	2.167 (55.04)	.563 (14.30)	1.0625 -12UNJ-3A	3.906 (99.21)
16	1.000 (25.40)	2.167 (55.04)	.563 (14.30)	1.3125-12UNJ-3A	3.906 (99.21)
20	1.250 (31.75)	2.167 (55.04)	.563 (14.30)	1.6250-12UNJ-3A	3.938 (100.03)
24	1.500 (38.10)	2.167 (55.04)	.563 (14.30)	1.8750-12UNJ-3A	4.000 (101.60)

Dash number	S inches (mm)	
4	.688 (17.48)	±.004 (0.10)
6	.813 (20.65)	
8	1.000 (25.40)	
10	1.125 (28.58)	±.005 (0.13)
12	1.375 (34.93)	
16	1.625 (41.28)	±.016 (0.41)
20	1.875 (47.63)	
24	2.125 (53.98)	±.020 (0.51)

NOTES:

1. Dimensions are in inches.
2. Metric equivalents are given for information only.
3. Unless otherwise specified tolerances are ±.016 inch (0.41 mm).
4. Break sharp edges .and remove all hanging burrs and slivers
5. Machined surfaces shall be finished to 125µ in Ra, forged surfaces shall be 250µ inches Ra, unless otherwise specified on the figures. Surface finish shall be in accordance with ASME B46.1.
6. For design features purposes, this standard takes precedence over documents referenced herein.
7. Referenced documents shall be of the issue in effect on date of invitation for bid.

FIGURE 1. Nipple dimensions and configuration - Continued.

REQUIREMENTS:

Dimensions and configuration shall be in accordance with figure 1.

Materials and finishes shall be in accordance with SAE-AS4843, see table I for material code.

Downloaded from http://www.everyspec.com

TABLE I. Material and code letters.

Code letter	Material
Blank	Copper alloy
J	Corrosion resistant steel (CRES), type 304
K	CRES, type 316
R	CRES. Type 321
S	CRES, type 347
T 1/	Titanium alloy
W	Aluminum alloy 7075-T73

1/ Not for use in oxygen systems.

Part or Identifying Number (PIN): The PIN consists of the letter "AN" the specification sheet number, a dash number for tube and port size, and a code letter for material type. Unassigned PIN's shall not be used.

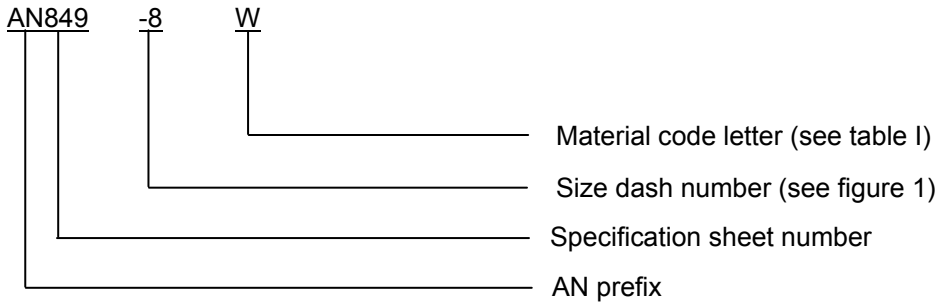

PIN example: AN849-8W indicates a nipple, hose to hose, .500 inch (12.70 mm), aluminum alloy 7075-T73.

Supersession data. The aluminum "D" designator has been replaced by the "W" designator.

Marking: Part shall be permanently marked with the AN PIN, and include the manufacturers CAGE, name, or trademark.

Table II provides a detailed cross-reference of AN849 PINs and replacement SAE-AS5189 PINs. Users are cautioned to evaluate replacements for their particular application.

CAUTION: The superseding information is valid as of the date of this specification and may be superseded by subsequent revisions of the superseding document.

Downloaded from http://www.everyspec.com

TABLE II. Cross-reference data. 1/

AN PIN	Hose Size	Replacement AS PIN	New design
AN849-4	0.250	AS5189B04	
AN849-4D	0.250	AS5189W04	AS5189W04
AN849-4J	0.250	AS5189J04	
AN849-4K	0.250	AS5189K04	
AN849-4R	0.250	AS5189R04	
AN849-4S	0.250	AS5189R04	AS5189R04
AN849-4T	0.250	None	
AN849-4W	0.250	AS5189W04	
AN849-6	0.375	AS5189B06	
AN849-6D	0.375	AS5189W06	AS5189W06
AN849-4J	0.375	AS5189J06	
AN849-4K	0.375	AS5189K06	
AN849-6R	0.375	AS5189R06	
AN849-6S	0.375	AS5189R06	AS5189R06
AN849-4T	0.375	None	
AN849-6W	0.375	AS5189W06	
AN849-8	0.500	AS5189B08	
AN849-8D	0.500	AS5189W08	AS5189W08
AN849-8J	0.500	AS5189J08	
AN849-8K	0.500	AS5189K08	
AN849-8R	0.500	AS5189R08	
AN849-8S	0.500	AS5189R08	AS5189R08
AN849-8T	0.500	None	
AN849-8W	0.500	AS5189W08	
AN849-10	0.625	AS5189B10	
AN849-10D	0.625	AS5189W10	AS5189W10
AN849-10J	0.625	AS5189J10	
AN849-10K	0.625	AS5189K10	
AN849-10R	0.625	AS5189R10	
AN849-10S	0.625	AS5189R10	AS5189R10
AN849-10T	0.625	None	
AN849-10W	0.625	AS5189W10	

See note at end of table.

Downloaded from http://www.everyspec.com

TABLE II. Cross-reference data - Continued. 1/

AN PIN	Hose Size	Replacement AS PIN	New design
AN849-12	0.750	AS5189B12	
AN849-12D	0.750	AS5189W12	AS5189W12
AN849-12J	0.750	AS5189J12	
AN849-12K	0.750	AS5189K12	
AN849-12R	0.750	AS5189R12	
AN849-12S	0.750	AS5189R12	AS5189R12
AN849-12T	0.750	None	
AN849-12W	0.750	AS5189W12	
AN849-16	1.000	AN5189B16	
AN849-16D	1.000	AS5189W16	AS5189W16
AN849-16J	1.000	AS5189J16	
AN849-16K	1.000	AS5189K16	
AN849-16R	1.000	AS5189R16	
AN849-16S	1.000	AS5189R16	AS5189R16
AN849-16T	1.000	None	
AN849-16W	1.000	AS5189W16	
AN849-20	1.250	AS5189B20	
AN849-20D	1.250	AS5189W20	AS5189W20
AN849-20J	1.250	AS5189J20	
AN849-20K	1.250	AS5189K20	
AN849-20R	1.250	AS5189R20	
AN849-20S	1.250	AS5189R20	AS5189R20
AN849-20T	1.250	None	
AN849-20W	1.250	AS5189W20	
AN849-24	1.500	AS5189B24	
AN849-24D	1.500	AS5189W24	AS5189W24
AN849-24J	1.500	AS5189J24	
AN849-24K	1.500	AS5189K24	
AN849-24R	1.500	AS5189R24	
AN849-24S	1.500	AS5189R24	AS5189R24
AN849-24T	1.500	None	
AN849-24W	1.500	AS5189W24	

1/ For new design use material designator R and W.

Changes from previous issues. Marginal notations are not used in this revision to identify changes with respect to the previous issue due to the extent of the changes.

Referenced documents. In addition to SAE-AS4843, this document references the following:

ASME B46.1
SAE-AS5132
SAE-AS5189
SAE-AS8879

Downloaded from http://www.everyspec.com

CONCLUDING MATERIAL

Custodians:
Navy - AS
Air Force - 99
DLA - CC

Review activities:
Navy MC, SA
Air Force - 71

Preparing activity:
DLA - CC

(Project 4730-2011-061)

NOTE: The activities listed above were interested in this document as of the date of this document. Since organizations and responsibilities can change, you should verify the currency of the information above using the ASSIST Online database at https://assist.daps.dla.mil.