Downloaded from http://www.everyspec.com

INCH-POUND

AN839 Rev 8
w/AMENDMENT 1
9 August 2012
SUPERSEDING
AN839 Rev 8
7 June 2011

DETAIL SPECIFICATION SHEET

ELBOW, TUBE TO HOSE, 45°

Reinstated after 7 June 2011. Inactive for new design.
For new design, use SAE-AS5182.

This specification is approved for use by all Departments and Agencies of the Department of Defense.

The requirements for acquiring the product described herein shall consist of this specification sheet and SAE-AS4843/1.

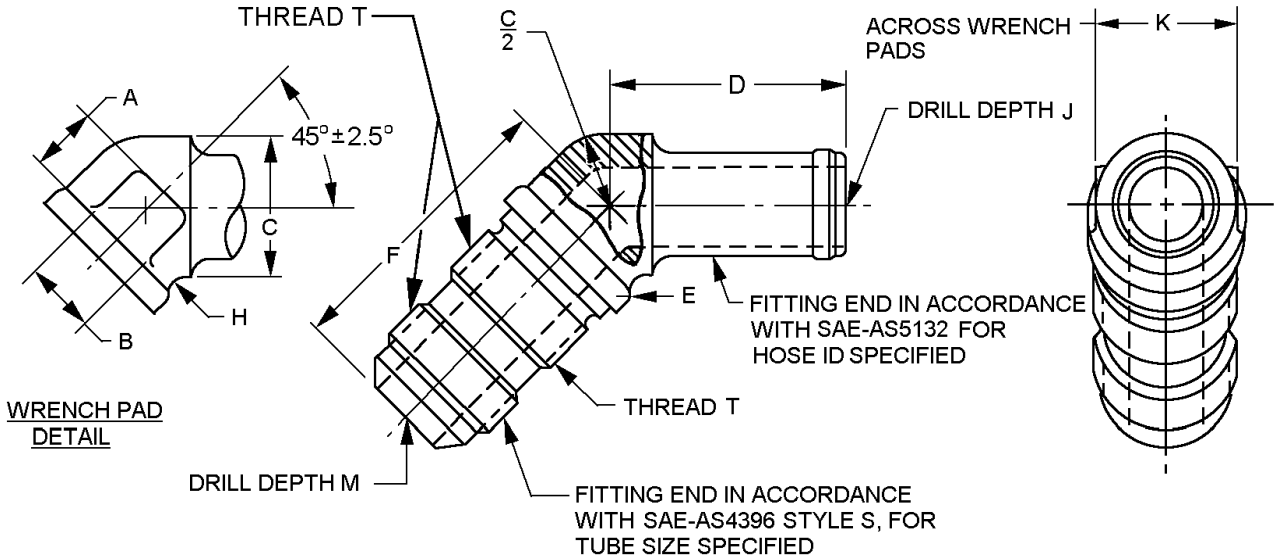

FIGURE 1. 45°Elbow dimensions and configurations.

Downloaded from http://www.everyspec.com

Dash number	Hose ID inches (mm)	Tube OD inches (mm)	Thread T SAE-AS8879	A Approx inches (mm)	B Approx inches (mm)
4	.250 (6.35)	.250 (6.35)	.4375-20UNJF-3A	.219 (5.56)	.250 (6.35)
6	.375 (9.53)	.375 (9.53)	.5625-18UNJF-3A	.281 (7.14)	.375 (9.53)
8	.500 (12.70)	.500 (12.70)	.7500-16UNJF-3A	.344 (8.74)	.438 (11.13)
10	.625 (15.88)	.625 (15.88)	.8750-14UNJF-3A	.438 (11.13)	.500 (12.70)
12	.750 (19.05)	.750 (19.05)	1.0625 -12UNJF-3A	.500 (12.70)	.566 (14.38)
16	1.000 (25.40)	1.000 (25.40)	1.3125 -12UNJ-3A	.563 (14.30)	.688 (17.48)
20	1.250 (31.75)	1.250 (31.75)	1.6250 -12UNJF-3A	.688 (17.48)	1.000 (25.40)
24	1.500 (38.10)	1.500 (38.10)	1.8750 -12UNJF-3A	.750 (19.05)	1.125 (28.58)

Dash number	C dia. inches (mm)	D +.047 (1.19) -.000 inches (mm)	E Radius inches (mm)	F +.047 (1.19) -.000 inches (mm)
4	.438 (11.13)	1.688 (42.88)	.063 (1.60)	1.422 (36.12)
6	.566 (14.38)	1.719 (43.66)		1.563 (39.70)
8	.750 (19.05)	1.750 (44.45)	.094 (2.39)	1.828 (46.43)
10	.875 (22.23)	1.797 (45.64)		2.047 (51.99)
12	1.063 (27.00)	1.828 (46.43)		2.281 (57.94)
16	1.313 (33.35)	1.890 (48.01)	.125 (3.18)	2.391 (60.73)
20	1.625 (41.28)	1.969 (50.01)		2.547 (64.69)
24	1.875 (47.63)	2.031 (51.59)		2.672 (67.87)

Dash number	H Radius inches (mm)	J +.047 (1.19) -.000 inches (mm)	K inches (mm)	M +.047 (1.19) -.000 inches (mm)
4	.063 (1.60)	1.750 (44.45)	.438 (11.13)	1.468 (37.29)
6	.094 (2.39)	1.797 (45.64)	.563 (14.30)	1.609 (40.87)
8		1.813 (46.05)	.750 (19.05)	1.938 (49.23)
10	.125 (3.18)	1.875 (47.63)	.875 (22.23)	2.172 (55.17)
12		1.953 (49.61)	1.063 (27.00)	2.422 (61.52)
16		2.047 (51.99)	1.313 (33.35)	2.593 (65.86)
20	.188 (4.78)	2.172 (55.17)	1.625 (41.28)	2.797 (71.04)
24		2.281 (57.94)	1.875 (47.63)	2.969 (75.41)

NOTES:
1. Dimensions are in inches.
2. Metric equivalents are given for information only.
3. Unless otherwise specified tolerances are ±.016 inch (0.41 mm).
4. Break sharp edges .and remove all hanging burrs and slivers
5. Machined surfaces shall be finished to 125µ-in Ra, forged surfaces shall be 250µ-in Ra, unless otherwise specified on the figures. Surface finish shall be in accordance with ASME B46.1.
6. For design features purposes, this standard takes precedence over documents referenced herein.

FIGURE 1. 45° Elbow dimensions and configurations - Continued.

Downloaded from http://www.everyspec.com

REQUIREMENTS:

Dimensions and configuration shall be in accordance with figure 1.

Installation shall be in accordance with MS21344.

Materials and finishes shall be in accordance with SAE-AS4843/1, see table I for material code.

TABLE I. Material and code letters.

Code letter	Material
Blank	Copper alloy
D 1/	Aluminum alloy 2014-T6 or 2024-T6 or T851
J	Corrosion resistant steel (CRES), type 304
K	CRES, type 316
R	CRES. type 321
S	CRES, type 347
T 2/	Titanium alloy
W	Aluminum alloy 7075-T73

1/ Inactive for new design, for new design use aluminum alloy 7075 to improve stress corrosion resistance and tensile strength.
2/ Not for use in oxygen systems.

Part or Identifying Number (PIN): The PIN consists of the letter “AN” the specification sheet number, a dash number for tube and hose size, and a material code letter for material type. Unassigned PIN’s shall not be used.

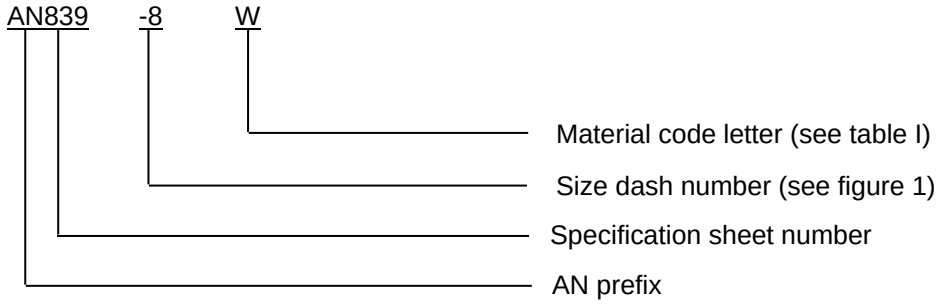

PIN example: AN839-8WP indicates a 45° elbow, tube to hose, .500 inches (12.70 mm), aluminum alloy 7075-T73.

Marking: Part shall be permanently marked with the AN PIN, and include the manufacturers CAGE, name, or trademark.

Table II provides a detailed cross-reference of AN839 PINs and replacement SAE-AS5182 PINs. Users are cautioned to evaluate replacements for their particular application.

CAUTION: The superseding information is valid as of the date of this specification and may be superseded by subsequent revisions of the superseding document.

Downloaded from http://www.everyspec.com

TABLE II. Cross-reference data. 1/

AN PIN 2/	Hose Size	Pipe Size	Replacement/new design AS PIN
AN839-4	0.250	0.250	AS5182B04
AN839-4D	0.250	0.250	AS5182W04
AN839-4J	0.250	0.250	AS5182J04
AN839-4K	0.250	0.250	AS5182K04
AN839-4R	0.250	0.250	AS5182R04
AN839-4S	0.250	0.250	AS5182R04
AN839-4T	0.250	0.250	None
AN839-4W	0.250	0.250	AS5182W04
AN839-6	0.375	0.375	AS5182B06
AN839-6D	0.375	0.375	AS5182W06
AN839-6J	0.375	0.375	AS5182J06
AN839-6K	0.375	0.375	AS5182K06
AN839-6R	0.375	0.375	AS5182R06
AN839-6S	0.375	0.375	AS5182R06
AN839-6T			None
AN839-6W	0.375	0.375	AS5182W06
AN839-8	0.500	0.500	AS5182B08
AN839-8D	0.500	0.500	AS5182W08
AN839-8J	0.500	0.500	AS5182J08
AN839-8K	0.500	0.500	AS5182K08
AN839-8R	0.500	0.500	AS5182R08
AN839-8S	0.500	0.500	AS5182R08
AN839-8T			None
AN839-8W	0.500	0.500	AS5182W08
AN839-10	0.625	0.625	AS5182B10
AN839-10D	0.625	0.625	AS5182W10
AN839-10J	0.625	0.625	AS5182J10
AN839-10K	0.625	0.625	AS5182K10
AN839-10R	0.625	0.625	AS5182R10
AN839-10S	0.625	0.625	AS5182R10
AN839-10T	0.625	0.625	None
AN839-10W	0.625	0.625	AS5182W10

See notes at end of table.

Downloaded from http://www.everyspec.com

TABLE II. Cross-reference data - Continued. 1/

AN PIN 2/	Hose Size	Pipe Size	Replacement/new design AS PIN
AN839-12	0.750	0.750	AS5182B12
AN839-12D	0.750	0.750	AS5182W12
AN839-12J	0.750	0.750	AS5182J12
AN839-12K	0.750	0.750	AS5182K12
AN839-12R	0.750	0.750	AS5182R12
AN839-12S	0.750	0.750	AS5182R12
AN839-12T	0.750	0.750	None
AN839-12W	0.750	0.750	AS5182W12
AN839-16	1.000	1.000	AS5182B16
AN839-16D	1.000	1.000	AS5182W16
AN839-16J	1.000	1.000	AS5182J16
AN839-16K	1.000	1.000	AS5182K16
AN839-16R	1.000	1.000	AS5182R16
AN839-16S	1.000	1.000	AS5182R16
AN839-16T	1.000	1.000	None
AN839-16W	1.000	1.000	AS5182W16
AN839-20	1.250	1.250	AS5182B20
AN839-20D	1.250	1.250	AS5182W16
AN839-20J	1.250	1.250	AS5182J20
AN839-20K	1.250	1.250	AS5182K20
AN839-20R	1.250	1.250	AS5182R20
AN839-20S	1.250	1.250	AS5182R20
AN839-20T	1.250	1.250	None
AN839-20W	1.250	1.250	AS5181W20
AN839-24	1.500	1.500	AS5182B24
AN839-24D	1.500	1.500	AS5182W24
AN839-24J	1.500	1.500	AS5182J24
AN839-24K	1.500	1.500	AS5182K24
AN839-24R	1.500	1.500	AS5182R24
AN839-24S	1.500	1.500	AS5182R24
AN839-24T	1.500	1.500	None
AN839-24W	1.500	1.500	AS5182W24

1/ For new design use material designators R and W.
2/ Inactive for new design.

Amendment notations. The margins of this specification are marked with vertical lines to indicate modifications generated by this amendment. This was done as a convenience only and the Government assumes no liability whatsoever for any inaccuracies in these notations. Bidders and contractors are cautioned to evaluate the requirements of this document based on the entire content irrespective of the marginal notations.

Downloaded from http://www.everyspec.com

Referenced documents. In addition to SAE-AS4843/1, this document references the following:

MS21344
ASME B46.1
SAE-AS4396
SAE-AS5132
SAE-AS5182
SAE-AS8879

CONCLUDING MATERIAL

Custodians:
Army - AV
Navy - AS
Air Force - 99
DLA - CC

Review activities:
Navy - SA
Air Force - 71

Preparing activity:
DLA - CC

(Project 4730-2012-048)

NOTE: The activities listed above were interested in this document as of the date of this document. Since organizations and responsibilities can change, you should verify the currency of the information above using the ASSIST Online database at https://assist.dla.mil.